INFINITY™ ICS MODEL 58MVC
DELUXE 4–WAY MULTIPOISE VARIABLE–SPEED
MULTI–STAGE CONDENSING GAS FURNACE
Series 100 Input Rates: 60,000 thru 120,000 Btuh

Carrier®
Turn to the Experts.℠

Product Data

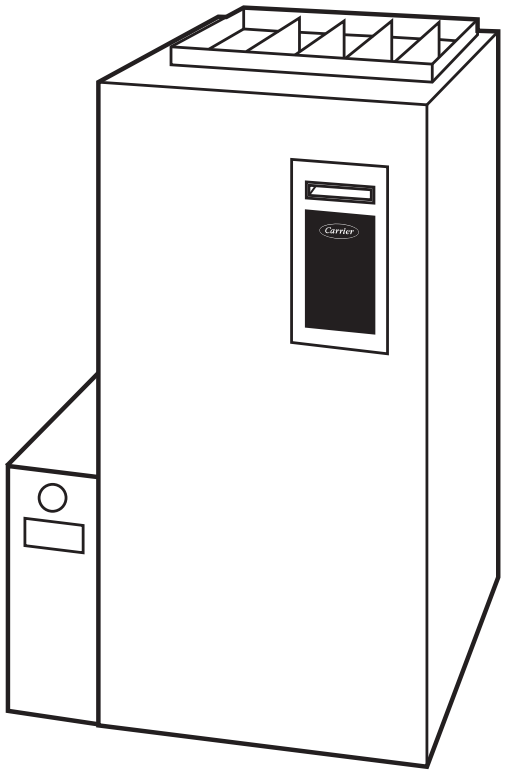

A05069

IdealComfort™ IdealHumidity

IdealComfort™ technology, the ultimate in heating comfort . . .

The Carrier Infinity™ ICS with IdealComfort™ technology achieves the optimum combination of comfort and efficency.

The Infinity™ ICS achieves industry-leading ultra-high efficiency at up to 95 percent Annual Fuel Utilization Efficiency (AFUE). Efficient performance is enhanced through the variable-speed design. To optimize heating performance, IdealComfort™ automatically adjusts the heating level, maximizing the use of low heating levels that produce near silent furnace operation while meeting the exact heating needs. This unit is designed to keep the indoor temperature within less than 1 degree of the thermostat setpoint. Because it operates in low heat most of the time, the Infinity™ ICS uses up to 80% less power than single-capacity furnaces.

In addition to providing ultimate comfort, the Infinity™ ICS has a sealed combustion system. This system brings combustion air to the furnace and vents flue gases outside the furnace in a safe manner. Because it is sealed, operational noise is minimal. A sealed combustion system also means fewer cold drafts and less air infiltration.

The Infinity™ ICS is available in 5 heat/airflow combinations. The unit has a 4-way multipoise design and can be installed in upflow, downflow, or horizontal positions covering up to 20 different applications. The Infinity™ ICS can be vented as a Direct vent/2-pipe furnace or as an optional ventilated combustion air application.

The versatile 4-way multipoise design in conjunction with variable speed makes the Infinity™ ICS ideal for use with split system cooling, including 2-speed units. A Carrier Infinity™ air purifier, humidifier, comfort ventilator, and Infinity™ Zone control will provide year round comfort and efficiency.

Designed for durability, comfort, and reliability, the Infinity™ ICS is the ultimate in versatile, efficient comfort.

Carrier Infinity® System — When the Infinity™ ICS variable-speed gas furnace is matched with the Infinity™ Control (-B release is compatible) and an air conditioner or heat pump, the homeowner will experience the ultimate in IdealComfort™ and IdealHumidity™ through unparalleled control of temperature, humidity, indoor air quality, and zoning. The Carrier Infinity™ System also provides unprecedented ease of use through onscreen, text-based service reminders and equipment malfunction alerts.

For even greater comfort and convenience, match the Infinity™ ICS furnace with an Infinity air conditioner or heat pump. This will create a fully communicating system, requiring only 4 thermostat wires between system components. In some cases, troubleshooting can even be done from the outdoor unit without entering the home.

Optional remote access through telephone or Internet is also available when combined with a remote connectivity kit.

INFINITY® ICS FEATURES / BENEFITS

IdealHumidity™—The IdealHumidity system actively controls both temperature and humidity in the home to provide the best comfort all year long. Other systems depend on heating or cooling demand to manage the moisture in the air. But, IdealHumidity™ gives the homeowner the right amount of humidity day and night, even in mild weather. No other manufacturer can do this! IdealHumidity saves energy, too. By keeping humidity under control, the homeowner can set their thermostat to stay comfortable and save energy—up to 20% off their cooling costs!

IdealComfort™—On the coldest days of the year, the Infinity™ ICS Furnace has the capacity to heat the home. On moderate days when less heat is required, this furnace will regulate itself to a lower capacity—providing a comfortable home and minimizing operating costs.
The patented algorithm and the VariPhase™ gas valve adjusts the low heat operating time to match the indoor conditions.

58MVC

Reliable Heat Exchanger Design—The primary heat exchanger is made of aluminized steel for corrosion resistance. The patented Serpentuff™ condensing heat exchanger cells are laminated with polypropylene for greater resistance to corrosion and epoxy coated externally to prevent oxidation. This break-through in heating technology helps extend the life of the furnace for years of dependable performance. The heat exchanger is positioned in the furnace to extract additional heat. Stainless steel coupling box componentry between heat exchangers has exceptional corrosion resistance in natural gas and propane applications.

Power Heat™ Igniter—Carrier's unique SiN igniter is not only physically robust but it is also electrically robust. It is capable of running at line voltage and does not require complex voltage regulators as do other brands. This unique feature further enhances the reliability of Infinity™ ICS gas furnace and continues Carrier's tradition of technology leadership and innovation in providing a reliable and durable product.

ComfortFan™—Improves comfort all year long by allowing selection of the continuous fan speed right at the thermostat.

SmartEvap™—Allows the system to reduce summertime humidity levels by nearly 10% over standard systems.

Media Filter Cabinet—Enhanced indoor air quality in the home is made easier with our media filter cabinet—a standard accessory on all deluxe furnaces. When installed as a part of the system, this cabinet allows for easy and convenient addition of a Carrier high efficiency air filter.

IdealComfort™ Control Center—The microprocessor control center features state-of-the-art combustion, temperature, and airflow control to maximize comfort while operating at peak efficiency.
Combustion control is obtained by taking the inducer motor RPM reading when the medium-heat pressure switch makes. Using this information, the microprocessor maintains a consistent air-to-fuel ratio independent of vent sizing and conditions during all phases of heat.

The first cycle after power reset provides 16 minutes of low heat before switching to high heat unless the room thermostat has been satisfied. Subsequent thermostat cycles provide anywhere from 0 to 16 minutes of low or medium heat depending on the length of the previous thermostat cycle.

Airflow control is accomplished by the microprocessor and blower motor. The ECM blower motor is configured by the microprocessor to react to changes in the static load on the air delivery system. The ECM blower uses this information to deliver correct airflow independent of variations in system restrictions. (For example, dirty filter or zone damper changes during a cycle.)

A special dehumidification function allows direct input from a thermidistat or humidistat. This input adjusts system airflow for greater humidity removal and increased cooling comfort during summer months.

Direct Venting or Optional Ventilated Combustion Air —The Infinity™ ICS can be installed as a 2-pipe (Direct Vent) furnace or as an optional ventilated combustion air application. This provides added flexibility to meet diverse installation needs.

Electronic Variable-Speed Motors—ECM Motors (Electronically Commutated Motor) provide variable-speed operation to optimize comfort levels in the home year round. They are also more economical to operate than standard motors.

Sealed Combustion System—Infinity™ ICS brings in combustion air from outside the furnace, which results in especially quiet operation.

Insulation—Foil-faced insulation in heat exchanger section of the casing minimizes heat loss.

Insulated Blower Compartment—The acoustical insulation reduces air and motor noise for quiet operation.

Monoport Burners—The burners are finely tuned for smooth, quiet combustion and economical operation.

Bottom Closure—Factory-installed for side return; easily removable for bottom return.

Blower Access Panel Switch—Automatically shuts off 115-v power to furnace whenever blower access panel is opened.

Quality Registration—The Infinity™ ICS is engineered and manufactured under an ISO 9001 registered quality system.

Certifications—The Infinity™ ICS, Model 58MVC units are CSA. (A.G.A. and C.G.A.) design certified for use with natural and propane gases. The furnace is factory-shipped for use with natural gas. A C.S.A. listed gas conversion kit is required to convert furnace for use with propane gas. The efficiency is GAMA efficiency rating certified. The Infinity™ ICS meets California Air Quality Management District emission requirements.

FURNACE COMPONENTS

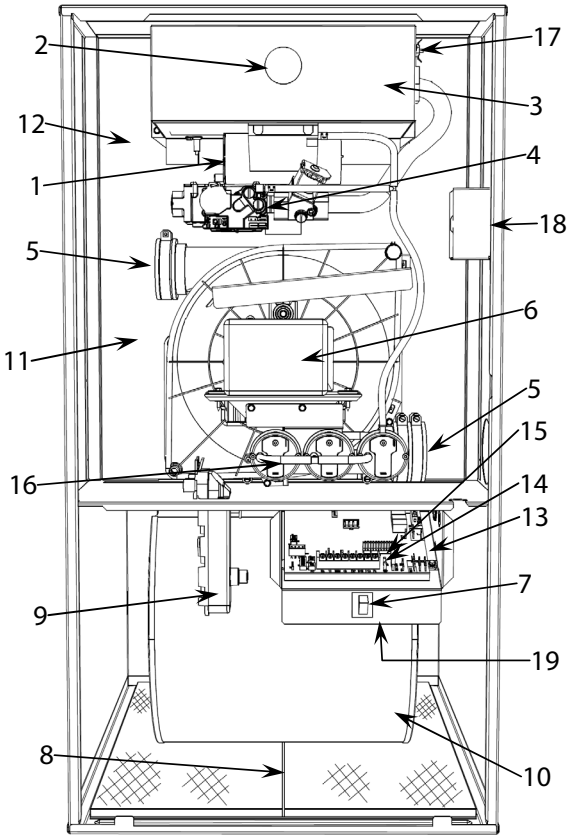

A07609

NOTE:

- The 58MVC Furnace is built for use with natural gas. The furnace can be converted for propane gas with a factory-authorized and listed accessory conversion kit.
- Control location and actual controls may be different than shown above.

1. Combustion-air intake connection to ensure contaminant-free air (right or left side).
2. Burner sight glass for viewing burner flame.
3. Burner assembly (inside). Operates with energy-saving inshot burners and Power Heat™ igniter for safe, dependable heating.
4. VariPhase™ multi-stage redundant valve assembly. Safe and efficient. Features one primary gas control with two internal shutoff valves and a throttling valve.
5. Vent outlet. Uses PVC pipe to carry flue gas from the furnace's combustion system (right or left side).
6. Inducer motor. Pulls hot flue gases through the heat exchangers, maintaining negative pressure for added safety.
7. Blower access panel safety interlock switch.
8. Air filter and retainer (location in furnace may vary).
9. Condensate drain connection. Collects moisture condensed from burned gases for disposal into home drain system. (Location in furnace varies.)
10. Heavy-duty blower. Circulates air across the heat exchangers to transfer heat into the home.
11. Serpentuff™ secondary condensing heat exchanger (inside). Wrings out more heat through condensation. Constructed with polypropylene-laminated steel to ensure durability.
12. Primary serpentine heat exchanger (inside). Stretches fuel dollars with the S-shaped heat-flow design. Solid construction of corrosion-resistant aluminized steel means reliability.
13. Furnace control board.
14. 3-amp fuse provides electrical and component protection.
15. Light emitting diode (LED) on furnace control board. Status code light is for diagnosing furnace operation and service requirements.
16. Pressure switches ensure adequate flow of flue gas through furnace and out vent system.
17. Rollout switch (manual reset) to prevent overtemperature.
18. Junction box for 115-v electrical power supply. (May be located on right or left side)
19. Transformer (24v) behind furnace control board provides low-voltage power to furnace control board and thermostat.

MODEL NUMBER NOMENCLATURE

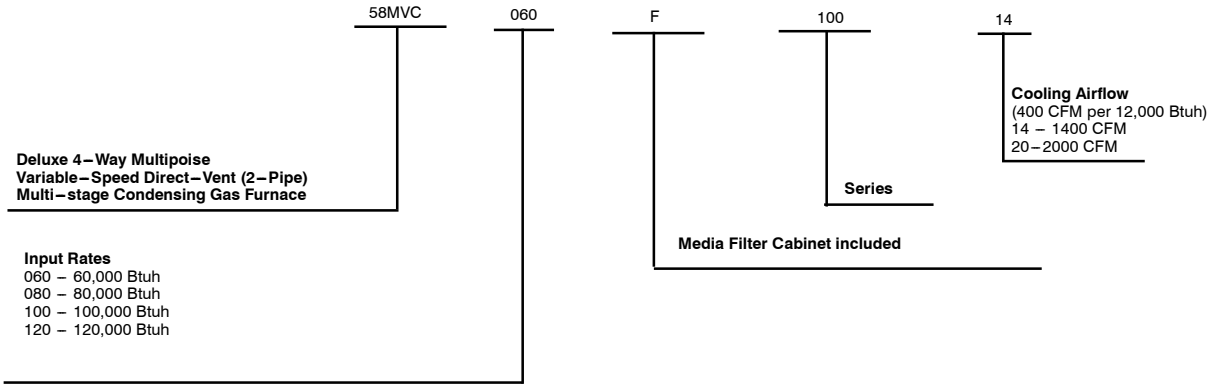

CARRIER ACCESSORIES

DESCRIPTION	PART NO.	UNIT SIZE				
		060 – 14	080 – 14	080 – 20	100 – 20	120 – 20
Vent Termination Kit (Bracket Only for 2 Pipes)	2 – in. — KGAVT0101BRA 3 – in. — KGAVT0201BRA	X	X	X	X	X
Concentric Termination Kit (Single Exit)	2 – in. — KGAVT0701CVT 3 – in. — KGAVT0801CVT	X	X	X	X	X
Condensate Freeze Protection Kit	KGAHT0101CFP	X	X	X	X	X
Infinity Air Purifier	Model GAPA	X	X	X	X	X
Condensate Neutralizer Kit (obtained thru RCD)	P908 – 0001	X	X	X	X	X
Electronic Air Cleaner	Model EACB	X	X	X	X	X
Mechanical Air Cleaner	Model FILCAB or EZXCAB	X	X	X	X	X
Humidifier	Model HUM	X	X	X	X	X
Heat Recovery Ventilator	Model HRV	X	X	X	X	X
Energy Recovery Ventilator	Model ERV	X	X	X	X	X
UV Lights	Model UVL	X	X	X	X	X
EZ Flex Media Filter with end caps – 16 – in. (9 pack)	EXPXXLMC0016	X				
EZ Flex Media Filter with end caps – 20 – in. (9 pack)	EXPXXLMC0020		X	X	X	
EZ Flex Media Filter with end caps – 24 – in. (6 pack)	EXPXXLMC0024					X
Replacement EZ Flex Filter – 16 – in. (10 pack)	EXPXXFIL0016	X				
Replacement EZ Flex Filter – 20 – in. (10 pack)	EXPXXFIL0020		X	X	X	
Replacement EZ Flex Filter – 24 – in. (10 pack)	EXPXXFIL0024					X
Unframed Filter 3/4 – in. — 16 x 25	KGAWF1301UFR KGAWF1306UFR (6 pack)	X	S	S	S	
Unframed Filter 3/4 – in. — 24 x 25	KGAWF1501UFR KGAWF1506UFR (6 pack)					X

CARRIER ACCESSORIES (CONTINUED)

DESCRIPTION	PART NO.	UNIT SIZE				
		060–14	080–14	080–20	100–20	120–20
Natural–To–Propane Gas Conversion Kit (Single Kit)*	KGANP4301STM	X	X	X	X	X
Propane–To–Natural Gas Conversion Kit (Single Kit)	KGAPN3601STM	X	X	X	X	X
ECM Motor Simulator (simulates the ECM motor to aid troubleshooting	KGASD0301FMS	X	X	X	X	X
Door Gasket Kit	KGBAC0110DGK	X	X	X	X	X
Advanced Product Monitor (software and hardware to link PC laptop to control board)	KGAFD0301APM	X	X	X	X	X
ECM Control Replacement Module – 1/2 HP	HK44EA122	X	X			
ECM Control Replacement Module – 1 HP	HK52EA122			X	X	X
Gas Orifice Kit Size 42 (Qty 50)	KGAHA0150N42	See Installation Instructions for model, altitude, and heat value usages.				
Gas Orifice Kit Size 43 (Qty 50)	KGAHA0250N43					
Gas Orifice Kit Size 44 (Qty 50)	KGAHA0350N44					
Gas Orifice Kit Size 45 (Qty 50)	KGAHA0450N45					
Gas Orifice Kit Size 46 (Qty 50)	KGAHA0550N46					
Gas Orifice Kit Size 47 (Qty 50)	KGAHA1550N47					
Gas Orifice Kit Size 48 (Qty 50)	KGAHA850N48					
Gas Orifice Kit Size 54 (Qty 50)	KGAHA0850P54					
Gas Orifice Kit Size 55 (Qty 50)	KGAHA0750P55					
Gas Orifice Kit Size 56 (Qty 50)	KGAHA0850P56					
Gas Orifice Kit Size 1.25mm (Qty 50)	KGAHA05750125					
Gas Orifice Kit Size 1.30mm (Qty 50)	KGAHA5750130					

* Factory–authorized and field–installed. Gas conversion kits are CSA (AGA/CGA) recognized.
S 16 x 25 filters suitable for side return on all furnace sizes.

THERMOSTAT AND ZONING CONTROL OPTIONS

NON–PROGRAMMABLE THERMOSTAT SELECTION	
TC–NAC or TP–NAC	For use with 1 speed Air Conditioner – °F/°C, Auto Changeover
TC–NHC or TP–NHC	For use with 1 speed Air Conditioner – °F/°C, Auto Changeover
TP–NRH*	For use with 2 speed Air Conditioner – °F/°C, Auto Changeover

* Model HP & 2 Stage thermostat must be field converted to air conditioner operation.

PROGRAMMABLE THERMOSTAT SELECTION	
TP–PAC	For use with 1 speed Air Conditioner – °F/°C, Auto Changeover, 7–Day Programmable
TP–PHP*	For use with 1 speed Heat Pump – °F/°C, Auto Changeover, 7–Day Programmable
TP–PRH*	For use with 2 speed Air Conditioner – °F/°C, Auto Changeover, 7–Day Programmable
TB–PAC	For use with 1 speed Air Conditioner – °F/°C, Auto Changeover, 5–2 Programmable
TP–PRH†	For use with two–stage applications – °F/°C, Auto Changeover, 7–Day Programmable
TP–PRH‡	For multi–use/stage configurations – °F/°C, Auto Changeover 7–Day Programmable
SYSTXCCUID01–B	Infinity™ user interface

* Model HP & 2 Stage thermostat must be field converted to air conditioner operation.
† Hybrid Heat™ thermostat is used with furnace and heat pump application.
‡ Thermidistat can be configured for heating, cooling, and Hybrid Heat applications. It must be configured for each specific application.

ZONING CONTROL SELECTION	
ZONECC3Z(AC/HP)01	WeatherMaker Two–Zone Kit
ZONECC2KIT01–B	Comfort Zone II–B 2–Zone Kit
ZONECC4KIT01–B	Comfort Zone II–B 4–Zone Kit
ZONECC8KIT01–B	Comfort Zone II–B 8–Zone Kit
SYSTXCCUIZ01–B	Infinity Zone User Interface
SYSTXCCRRS01	Infinity Remote Room Sensor
SYSTXCCSMS01	Infinity Smart Sensor
SYSTXCC4ZC01	Infinity 4–Zone Damper Control

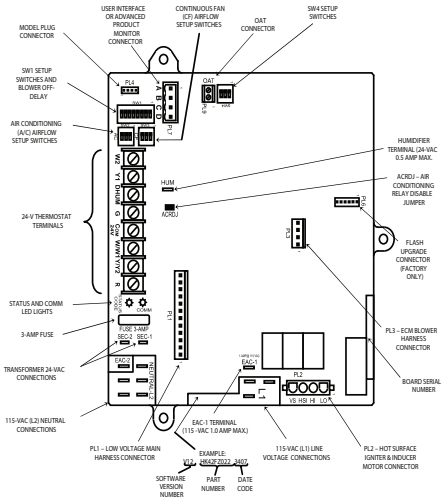

CONTROL CENTER

A07422

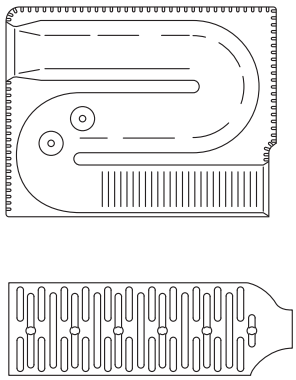

HEAT EXCHANGERS

A92505

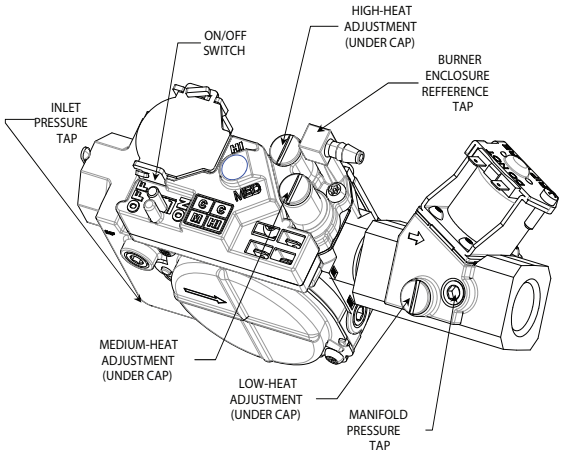

GAS VALVE

A07280

58MVC

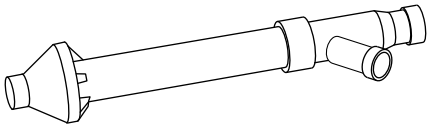

Concentric Vent Kit

A93086

A concentric vent kit allows vent and combustion-air pipes to terminate through a single exit in a roof or side wall. One pipe runs inside the other allowing venting through the inner pipe and combustion air to be drawn in through the outer pipe.

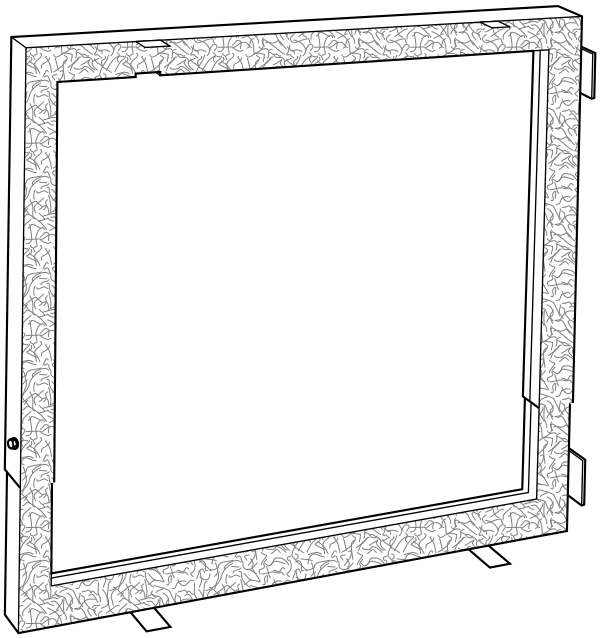

Downflow Subbase

A88202

One base fits all furnace sizes. The base is designed to be installed between the furnace and a combustible floor when no coil box is used or when a coil box other than a Carrier cased coil is used. It is A.G.A. design certified for use with Carrier 58MVC furnaces when installed in downflow applications.

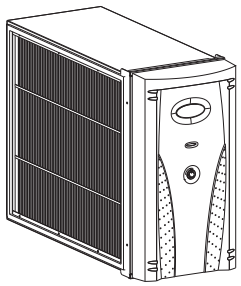

ELECTRONIC OR MECHANICAL AIR CLEANER

Cleans the air of smoke, dirt, and many pollens commonly found. Saves decorating and cleaning expenses by keeping carpets, furniture and drapes cleaner.

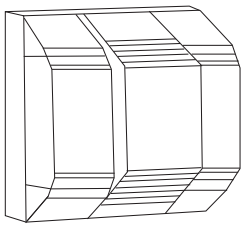

HUMIDIFIER

By adding moisture to winter-dry air, a Carrier Humidifier can often improve comfort and keeps woodwork, wallpaper, and pain in better condition. Moisturizing household air also helps to retain normal body heat and provides comfort at lower temperatures.

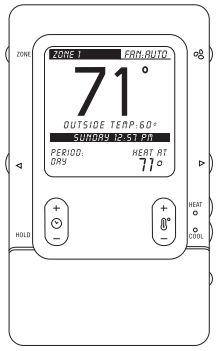

CONTROLS: THERMOSTATS AND ZONING

Available in programmable and non-programmable models, Carrier thermostats maintain a constant, comfortable temperature level in the home.

For the ultimate in home comfort, Carrier's 2-, 4- or 8-zone systems allow temperature control of individual "zones" of the home. This is accomplished through a series of electronic dampers and remote rooom sensors. The 4-zone system is shown.

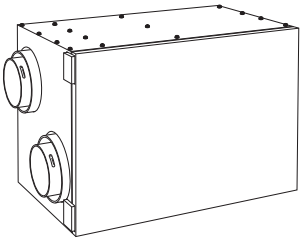

ENERGY/HEAT RECOVERY VENTILATOR

Carrier's energy or heat recovery ventilators exhaust stale indoor air and provide fresh outdoor air to the home while minimizing heat loss and humidity level. Especially useful for today's tighter constructed houses.

Energy recovery ventilator is shown.

EFFICIENCY RATING CERTIFIED Gama

MEETS DOE RESIDENTIAL CONSERVATION SERVICES PROGRAM STANDARDS. Before purchasing this appliance, read important energy cost and efficiency information available from your retailer.

ISO 9001:2000 QMI REGISTERED

DESIGN CERTIFIED®

CERTIFIED®

REGISTERED QUALITY SYSTEM

These products are engineered and manufactured under an ISO 9001 registered quality system.

ENERGY STAR PARTNER

As an ENERGY STAR Partner, Carrier Corporation has determined that this product meets the ENERGY STAR guidelines for energy efficiency.

PHYSICAL DATA

DESCRIPTION	UNIT SIZE				
	060–14	080–14	080–20	100–20	120–20
Direct–Drive Motor Hp (ECM)	1/2	1/2	1	1	1
Motor Full Load Amps	7.7	7.7	12.8	12.8	12.8
RPM (Nominal)—Speeds	Variable 250 — 1300				
Blower Wheel Diameter X Width (in.)	10 X 7	11 X 10	11 X 10	11 X 10	11 X 10
Filter Size (in.) Nominal A (Washable)	(1) 16 X 25 X 1	(1) 20 X 25 X 1	(1) 20 X 25 X 1	(1) 20 X 25 X 1	(1) 24 X 25 X 1
Shipping Weight (lb)	170	182	204	203	234
Limit Control	SPST				
Heating Blower Control (Off Delay)	Selectable 90, 120, 150, or 180 SEC Intervals				
Burners (Monoport)	3	4	4	5	6
Gas Connection Size	1/2–in. NPT				
Gas Valve (Redundant) Manufacturer Minimum Inlet Pressure (in. wc) Maximum Inlet Pressure (in. wc)	White–Rodgers 4.5 (Natural Gas) 13.6 (Natural Gas)				
Ignition Device	Hot Surface –SiN				

58MVC

PERFORMANCE DATA

UNIT SIZE			060–14	080–14	080–20	100–20	120–20
CERTIFIED TEMP RISE RANGE (°F)		Low	35 – 65	35 – 65	35 – 65	40 – 70	35 – 65
		Medium	50 – 80	50 – 80	50 – 80	50 – 80	50 – 80
		High	35 – 65	40 – 70	35 – 65	45 – 75	45 – 75
CERTIFIED EXT STATIC PRESSURE (ESP)		Heating	0.12	0.15	0.15	0.20	0.20
		Cooling	0.50	0.50	0.50	0.50	0.50
AIRFLOW CFM‡		Heating Low	410 (470**)	540 (620**)	525 (605**)	660 (760**)	890 (1025**)
		Heating Medium	545 (625**)	695 (800**)	685 (790**)	875 (1005**)	1095 (1260**)
		Heating High	1070	1220	1470	1510	1900
		Cooling (Max)	1400	1375	1975	1950	2060
OUTPUT CAPACITY BTUH* (ICS)	Low	Upflow	22000	30000	30000	38000	46000
		Downflow	23000	30000	30000	38000	46000
		Horizontal	21000	30000	30000	38000	45000
	Medium	Upflow	37000	49000	49000	61000	73000
		Downflow	36000	49000	49000	61000	73000
		Horizontal	36000	49000	49000	61000	73000
	High	Upflow	56000	74000	74000	94000	112000
		Downflow	56000	74000	74000	94000	112000
		Horizontal	56000	74000	74000	93000	112000
AFUE%* Nonweatherized ICS		Upflow	95.0	95.0	95.0	95.0	95.0
		Downflow	92.1	92.3	92.3	93.5	93.3
		Horizontal	94.0	94.7	94.7	95.0	93.8
INPUT BTUH†		Low	24000	32000	32000	40000	48000
		Medium	39000	52000	52000	65000	78000
		High	60000	80000	80000	100000	120000

* Capacity in accordance with U.S. Government DOE test procedures.
† Gas input ratings are certified for elevations to 2000 ft. For elevations above 2000 ft, reduce ratings 2% for each 1000 ft above sea level. In Canada, derate the unit 5% for elevations from 2000 to 4500 ft above sea level.
‡ Airflow shown is for bottom only return–air supply with factory–supplied 1–in. washable filter(s). For air delivery above 1800 CFM, see Air Delivery Table for other options.
** Low– and Medium–heat CFM when low/medium heat rise adjustment switch (SW1–3) on furnace control is used.

AIR DELIVERY - CFM (BOTTOM RETURN WITH FILTER)

Unit Size	Operating Mode	CFM Airflow Setting	External Static Pressure Range*	External Static Pressure (ESP) 0.1	0.2	0.3	0.4	0.5	0.6	0.7	0.8	0.9	1.0
060–14													
††	Low Heat	410†	0–0.50	410	410	410	410	405					
††	Medium Heat	560†	0–0.50	545	560	560	560	560					
	High Heat	1070†	0–1.0	1065	1070	1070	1070	1070	1070	1070	1065	1045	1015
††	1–1/2–Ton A/C Cooling	525	0–0.50‡	525	525	525	525	525					
††	2–Ton A/C Cooling	700	0–0.50‡	700	700	700	700	700					
	2–1/2–Ton A/C Cooling	875	0–1.0‡	875	875	875	875	875	875	875	875	860	840
	3–Ton A/C Cooling	1050	0–1.0	1050	1050	1050	1050	1050	1050	1050	1050	1050	1045
	3–1/2–Ton A/C Cooling	1225	0–1.0	1225	1225	1225	1225	1225	1225	1225	1225	1225	1205
	Maximum	1400	0–1.0	1400	1400	1400	1400	1400	1400	1400	1400	1380	1325
080–14* **													
††	Low Heat	540†	0–0.50	540	540	535	525	510					
††	Medium Heat	710†	0–0.50	695	695	685	685	685					
	High Heat	1220†	0–1.0	1220	1220	1220	1220	1220	1220	1220	1220	1195	1150
††	1–1/2–Ton A/C Cooling	525	0–0.50‡	515	495	490	475	465					
††	2–Ton A/C Cooling	700	0–0.50‡	685	680	670	665	665					
	2–1/2–Ton A/C Cooling	875	0–1.0‡	830	840	850	860	860	855	840	830	825	820
	3–Ton A/C Cooling	1050	0–1.0‡	1050	1050	1050	1050	1050	1045	1040	1025	1015	1000
	3–1/2–Ton A/C Cooling	1225	0–1.0‡	1225	1225	1225	1225	1225	1225	1225	1225	1185	1140
	Maximum	1400	0–1.0‡	1400	1400	1400	1400	1375	1325	1280	1235	1190	1145
080–20* **													
††	Low Heat	525†	0–0.50	525	490	475	455	430					
††	Medium Heat	705†	0–0.50	685	655	660	660	660					
	High Heat	1470†	0–1.0	1470	1470	1470	1470	1470	1470	1455	1450	1435	1420
††	2–Ton A/C Cooling	700	0–0.50‡	670	640	635	630	630					
††	2–1/2–Ton A/C Cooling	875	0–0.50‡	870	875	865	865	865					
	3–Ton A/C Cooling	1050	0–1.0‡	1050	1045	1040	1045	1045	1050	1050	1050	1045	1040
	3–1/2–Ton A/C Cooling	1225	0–1.0‡	1225	1225	1225	1225	1225	1225	1225	1225	1225	1225
	4–Ton A/C Cooling	1400	0–1.0‡	1330	1345	1360	1375	1380	1380	1380	1370	1365	1355
	5–Ton A/C Cooling	1750	0–1.0	1750	1750	1750	1750	1750	1750	1745	1725	1700	1685
	Maximum	2000	0–1.0	2000	2000	2000	2000	1975	1955	1920	1870	1820	1770
100–20* **													
††	Low Heat	660†	0–0.50	660	660	655	655	655					
††	Medium Heat	890†	0–0.50	875	890	890	890	890					
	High Heat	1510†	0–1.0	1510	1510	1510	1510	1510	1500	1490	1480	1470	1455
††	2–Ton A/C Cooling	700	0–0.50‡	700	690	690	690	690					
††	2–1/2–Ton A/C Cooling	875	0–0.50‡	835	845	855	860	865					
	3–Ton A/C Cooling	1050	0–1.0‡	1050	1050	1050	1050	1050	1050	1050	1050	1050	1050
	3–1/2–Ton A/C Cooling	1225	0–1.0‡	1170	1190	1205	1220	1225	1225	1225	1225	1225	1225
	4–Ton A/C Cooling	1400	0–1.0‡	1400	1400	1400	1400	1400	1400	1400	1400	1400	1375
	5–Ton A/C Cooling	1750	0–1.0	1735	1740	1735	1735	1725	1720	1710	1695	1680	1660
	Maximum	2000	0–1.0	1995	1985	1980	1965	1950	1935	1910	1885	1860	1815
120–20													
	Low Heat	890†	0–1.0	890	890	890	880	885	890	885	885	875	860
	Medium Heat	1130†	0–1.0	1095	1110	1120	1130	1125	1130	1130	1115	1110	1105
	High Heat	1900†	0–1.0	1900	1900	1900	1900	1900	1885	1875	1860	1840	1815
††	2–Ton A/C Cooling	700	0–0.50‡	700	700	700	700	695					
††	2–1/2–Ton A/C Cooling	875	0–0.50‡	870	875	875	865	870					
	3–Ton A/C Cooling	1050	0–1.0‡	1025	1035	1045	1050	1050	1050	1050	1050	1040	1025
	3–1/2–Ton A/C Cooling	1225	0–1.0‡	1210	1210	1210	1225	1225	1225	1225	1225	1225	1225
	4–Ton A/C Cooling	1400	0–1.0‡	1385	1400	1400	1400	1400	1400	1400	1395	1375	1370
	5–Ton A/C Cooling	1750	0–1.0‡	1745	1730	1735	1735	1740	1735	1730	1725	1710	1685
	6–Ton A/C Cooling	2100	0–1.0	2100	2100	2080	2065	2060	2045	2030	2000	1960	1895
	Maximum	2100	0–1.0	2100	2100	2080	2065	2060	2045	2030	2000	1960	1895

*Actual external static pressure (ESP) can be determined by using the fan laws (CFM^2 proportional to ESP); such as, a system with 1750 CFM at 0.5 ESP would operate at high–heating airflow of 1470 CFM at 0.35 ESP, medium–heating airflow of 705 CFM at 0.08 ESP and low–heating airflow of 525 CFM at 0.05 ESP.

†All heating CFM's are when low/medium heat rise adjustment switch (SW1–3) and comfort/efficiency adjustment switch (SW1–4) are OFF.

‡Ductwork must be sized for high–heating CFM within the operational range of ESP.

†† Operation within the blank areas of the chart is not recommended because high–heat operation will be above 1.0 ESP.

***All airflows on 21" casing size furnaces are 5% less on side return only installations.

COMBUSTION-AIR PIPE FOR NON-DIRECT (1-PIPE) VENT APPLICATION (SIZES 040 THROUGH 120 ONLY)

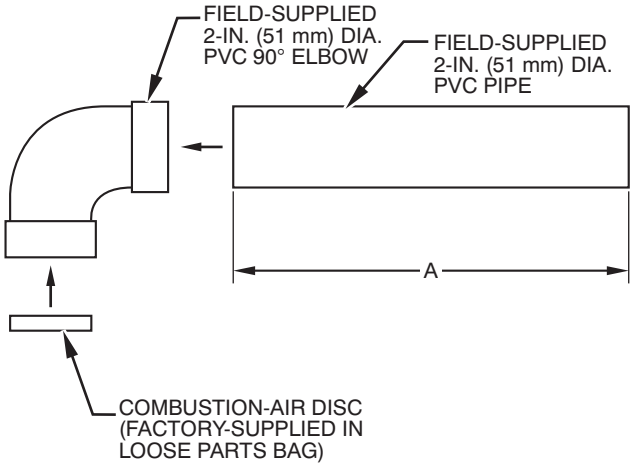

Length of Straight Pipe Portion of Combustion Air Inlet Pipe Assembly – In. (mm)

CASING WIDTH	A
17 1/2 (444.5)	8 1/2+/– 1/2 (215.9 +/– 12.7)
21 (533.4)	10 1/2 +/– 1/2 (266.7 +/– 12.7)
24 1/2 (622.3)	12 +/– 1/2 (304.8 +/– 12.7)

A96211

58MVC

CONCENTRIC VENT (DIRECT VENT / 2-PIPE ONLY) (ALL MODEL SIZES)

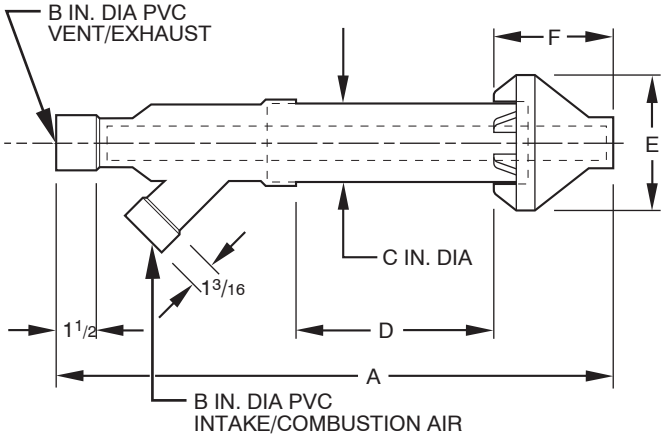

DIMENSIONS (IN / MM)

KIT PART NO.	A*	B	C	D†	E	F
KGAVT0701CVT	33–3/8 / 847.7	2 / 50.8	3–1/2 / 88.9	16–5/8 / 422.3	6–1/4 / 158.8	5–3/4 / 146.1
KGAVT0801CVT	38–7/8 / 987.4	3 / 78.2	4–1/2 / 114.3	21–1/8 / 536.6	7–3/8 / 189.3	6–1/2 / 165.1

* Dimension A will change proportionally as dimension D is lengthened or shortened.

† Dimension D may be lengthened to 60 in. (1524 mm) maximum. Dimension D may also be shortened by cutting the pipes provided in the kit to 12 in. (304.8 mm) minimum.

A97110

CONDENSATE TRAP

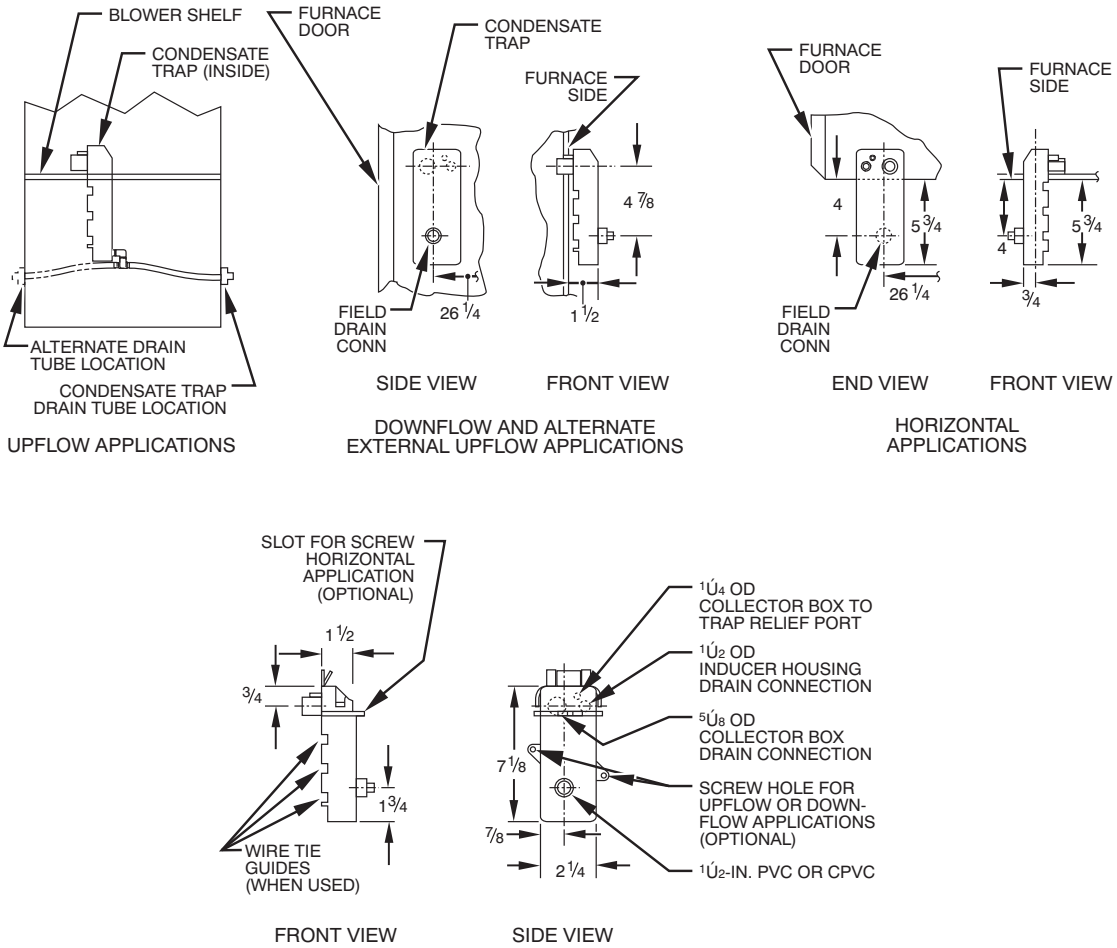

58MVC

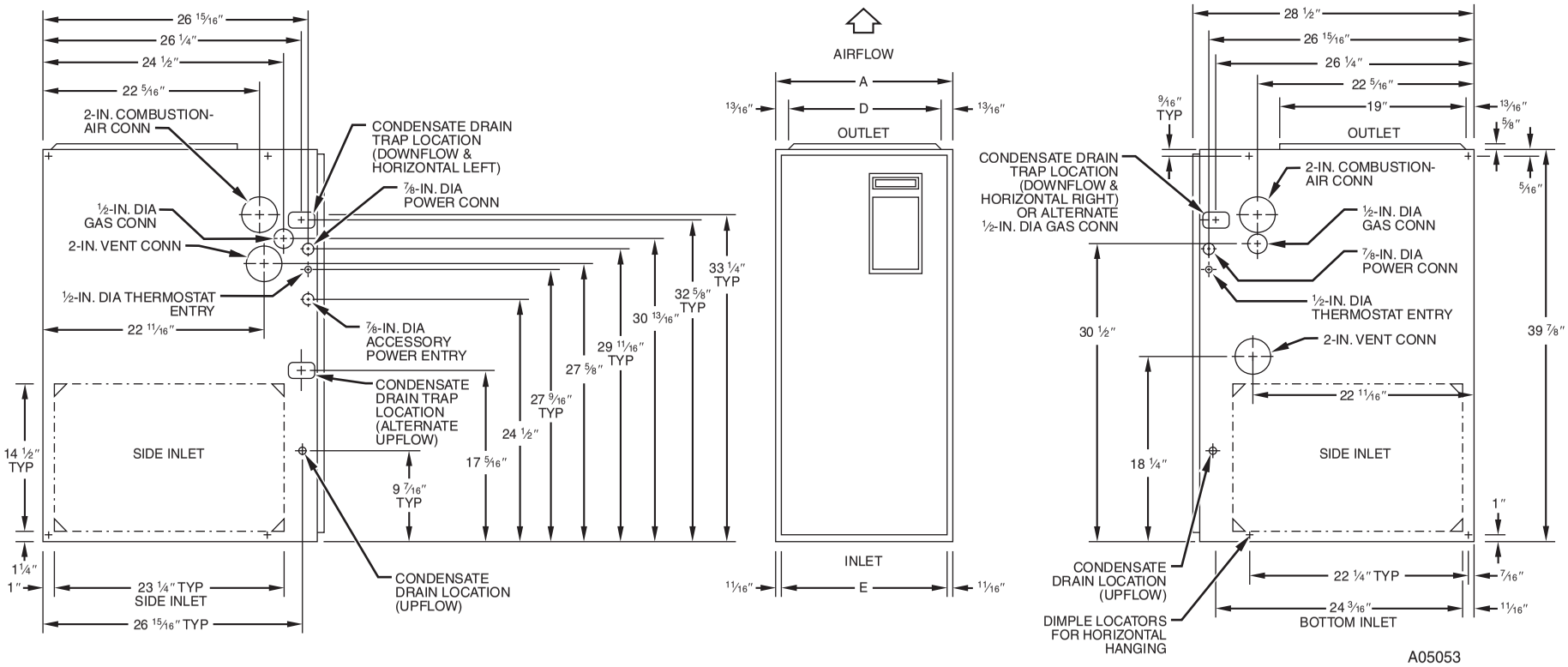

NOTES: 1. Minimum return-air openings at furnace, based on metal duct. If flex duct is used, see flex duct manufacturer's recommendations for equivalent diameters.

2. Minimum return-air opening at furnace:
   a. For 800 CFM–16-in. round or 14 1/2 x 12-in. rectangle.
   b. For 1200 CFM–20-in. round or 14 1/2 x 19 1/2-in. rectangle.
   c. For 1600 CFM–22-in. round or 14 1/2 x 23 1/4-in. rectangle.
   d. For airflow requirements above 1800 CFM, see Air Delivery table in Product Data literature for specific use of single side inlets. The use of both side inlets, a combination of 1 side and the bottom, or the bottom only will ensure adequate return air openings for airflow requirements above 1800 CFM at 0.5 W.C. ESP.

DIMENSIONS (IN / MM)			
UNIT SIZE	**A**	**D**	**E**
060 – 14	17 – 1/2 / 444.5	15 – 7/8 / 403.3	16 / 406.4
080 – 14	21 / 533.4	19 – 3/8 / 492.2	19 – 1/2 / 495.3
080 – 20	21 / 533.4	19 – 3/8 / 492.2	19 – 1/2 / 495.3
100 – 20	21 / 533.4	19 – 3/8 / 492.2	19 – 1/2 / 495.3
120 – 20	24 – 1/2 / 622.3	22 – 7/8 / 581.0	23 / 584.2

DOWNFLOW SUBBASE

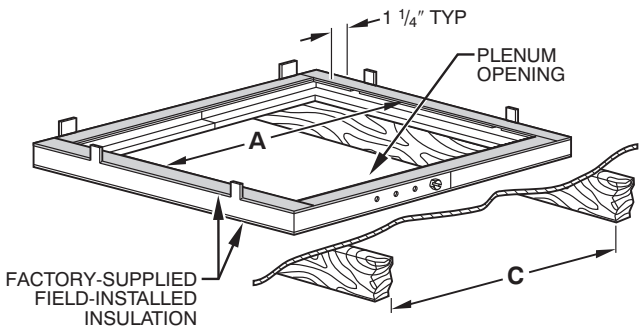

A97427

Assembled

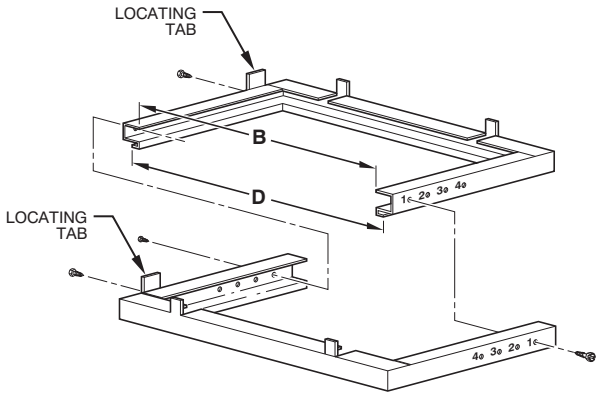

A88207

Disassembled

DIMENSIONS (IN. / MM)						
FURNACE CASING WIDTH	FURNACE IN DOWNFLOW APPLICATION	PLENUM OPENING*		FLOOR OPENING		HOLE NO. FOR WIDTH ADJUSTMENT
		A	B	C	D	
17–1/2 / 444.5	Furnace with or without Cased Coil Assembly or Coil Box	15–1/8 / 384.2	19 / 482.6	16–3/4 / 425.5	20–3/8 / 517.5	3
21 / 533.4	Furnace with or without Cased Coil Assembly or Coil Box	18–5/8 / 396.4	19 / 482.6	20–1/4 / 514.4	20–3/8 / 517.5	2
24–1/2 / 622.3	Furnace with or without Cased Coil Assembly or Coil Box	22–'/8 / 562.0	19 / 482.6	23–3/4 / 603.3	20–3/8 / 517.5	1

*The plenum should be constructed 1/4–in. smaller in width and depth than the plenum dimensions shown above.

MEDIA FILTER CABINET

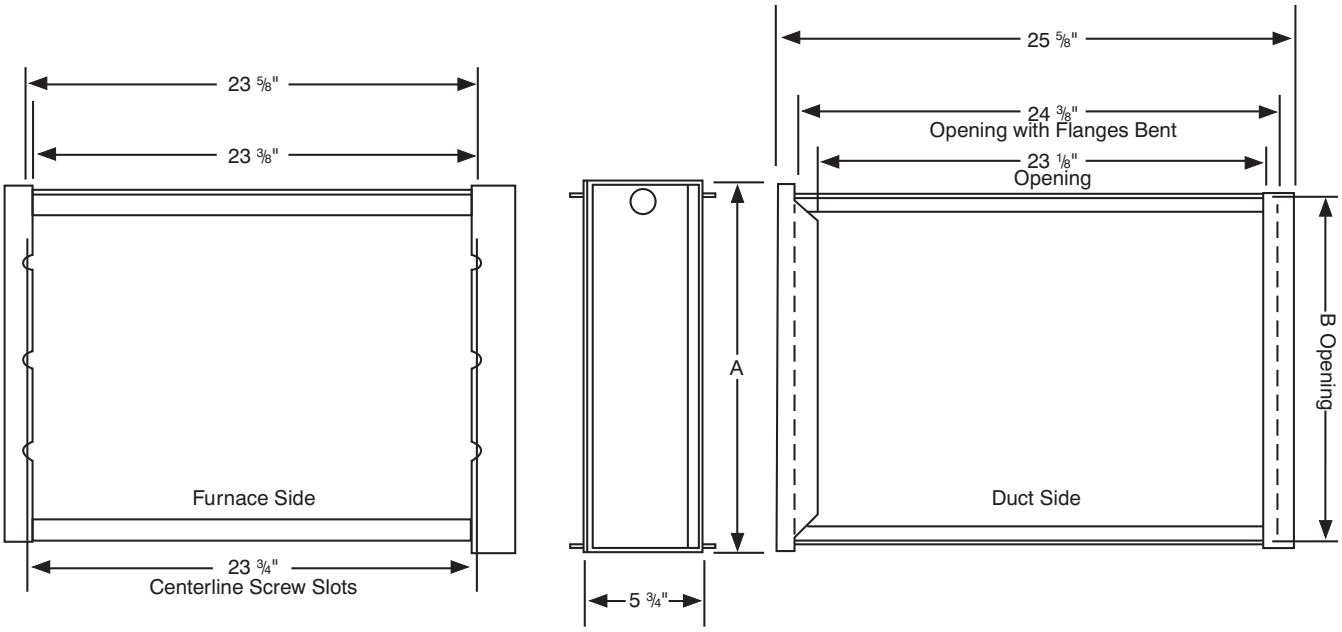

A07803

DIMENSIONS (IN. / MM)			
MEDIA FILTER CABINET	A	B	SHIPPED WITH SIZES
16 / 406.4	17 / 432.8	16 / 406.4	060–14
20 / 508.0	21 / 533.4	20 / 508	080–14, 080–20
24 / 609.6	25 / 635.0	24 / 609.6	100–20

ELECTRICAL DATA

UNIT SIZE		060−14	080−14	080−20	100−20	120−20
UNIT VOLTS − HERTZ − PHASE		115 − 60 − 1				
OPERATING VOLTAGE RANGE (Min − Max)*		104 − 127				
MAXIMUM UNIT AMPS		8.96	8.96	14.06	14.06	14.06
MINIMUM WIRE SIZE		14	14	12	12	12
MAXIMUM WIRE LENGTH (Ft)‡		30	30	31	31	31
MAXIMUM FUSE OR CKT BKR (Amps)**		15	15	20	20	20
TRANSFORMER (24v)		40va				
EXTERNAL CONTROL POWER AVAILABLE	Heating	18va				
	Cooling	34va				

*Permissible limits of the voltage range at which the unit will operate satisfactorily.
‡Length shown is as measured one way along wire path between unit and service panel for maximum 2% voltage drop.
**Time−delay type is recommended.

58MVC

TYPICAL WIRING SCHEMATIC

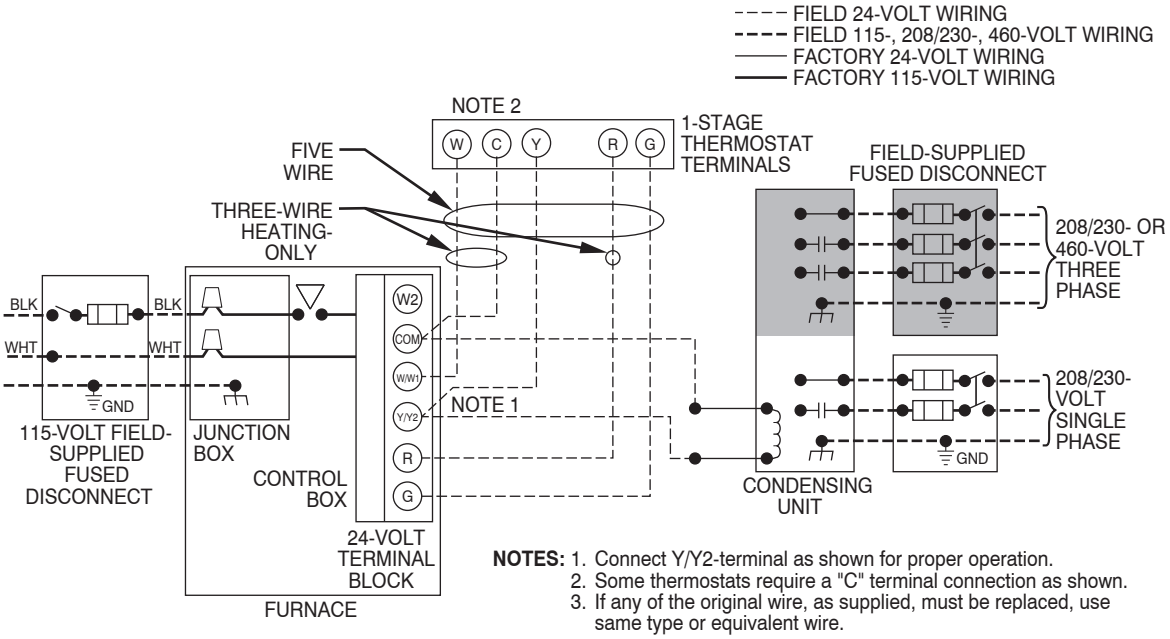

MAXIMUM ALLOWABLE PIPE LENGTH (FT / M)

		Direct Vent (2–Pipe Only)		NUMBER OF 90° ELBOWS					
UNIT SIZE (BTUH)	ALTITUDE	Termination Type	Pipe Dia (IN.)*	1	2	3	4	5	6
60,000	0 to 2000	2 Pipe or 2–In. Concentric	1–1/2	50 / 15.2	45 / 13.7	40 / 12.9	35 / 10.7	30 / 9.1	25 / 7.6
			2	70 / 21.3	70 / 21.3	70 / 21.3	70 / 21.3	70 / 21.3	70 / 21.3
80,000		2 Pipe or 2–In. Concentric	1–1/2	30 / 9.14	25 / 7.6	20 / 6.1	15 / 4.6	10 / 3.0	5 / 1.5
			2	70 / 21.3	70 / 21.3	70 / 21.3	70 / 21.3	70 / 21.3	70 / 21.3
100,000		2 Pipe or 2–In. Concentric	2	45 / 13.7	40 / 12.9	35 / 10.7	30 / 9.1	25 / 7.6	20 / 6.1
			2–1/2	70 / 21.3	70 / 21.3	70 / 21.3	70 / 21.3	70 / 21.3	70 / 21.3
120,000		2 Pipe or 3–In. Concentric	2–1/2 one disk	10 / 3.0	NA	NA	NA	NA	NA
			3 one disk	35 / 10.7	30 / 9.1	15 / 4.8	NA	NA	NA
			3 one disk†	70 / 21.3	70 / 21.3	70 / 21.3	70 / 21.3	70 / 21.3	70 / 21.3
UNIT SIZE (BTUH)	ALTITUDE	Termination Type	Pipe Dia (IN.)*	NUMBER OF 90° ELBOWS					
				1	2	3	4	5	6
60,000	2001 to 3000	2 Pipe or 2–In. Concentric	1–1/2	45 / 13.7	40 / 12.9	35 / 10.7	30 / 9.14	25 / 7.6	20 / 6.1
			2	70 / 21.3	70 / 21.3	70 / 21.3	70 / 21.3	70 / 21.3	70 / 21.3
80,000		2 Pipe or 2–In. Concentric	1–1/2	26 / 7.9	21 / 6.4	16 / 4.9	11 / 3.4	6 / 1.8	NA
			2	70 / 21.3	70 / 21.3	70 / 21.3	70 / 21.3	70 / 21.3	70 / 21.3
100,000		2 Pipe or 2–In. Concentric	2	40 / 12.2	35 / 10.7	30 / 9.1	25 / 7.6	20 / 6.1	15 / 4.6
			2–1/2	70 / 21.3	70 / 21.3	70 / 21.3	70 / 21.3	70 / 21.3	70 / 21.3
120,000		2 Pipe or 3–In. Concentric	3 one disk	31 / 9.4	26 / 7.9	12 / 3.7	NA	NA	NA
			3 one disk†	63 / 19.2	62 / 18.9	62 / 18.9	61 / 18.6	61 / 18.6	61 / 18.6
UNIT SIZE (BTUH)	ALTITUDE	Termination Type	Pipe Dia (IN.)*	NUMBER OF 90° ELBOWS					
				1	2	3	4	5	6
60,000	3001 to 4000	2 Pipe or 2–In. Concentric	1–1/2	42 / 12.8	37 / 11.2	32 / 9.8	27 / 8.2	22 / 6.7	17 / 5.2
			2	70 / 21.3	70 / 21.3	70 / 21.3	70 / 21.3	70 / 21.3	70 / 21.3
80,000		2 Pipe or 2–In. Concentric	1–1/2	25 / 7.6	20 / 6.1	15 / 4.6	10 / 3.0	5 / 1.5	NA
			2	70 / 21.3	70 / 21.3	70 / 21.3	70 / 21.3	70 / 21.3	70 / 21.3
100,000		2 Pipe or 2–In. Concentric	2	38 / 11.6	33 / 10.1	28 / 8.5	23 / 7.0	18 / 5.5	13 / 4.0
			2–1/2	70 / 21.3	70 / 21.3	70 / 21.3	70 / 21.3	70 / 21.3	70 / 21.3
120,000		2 Pipe or 3–In. Concentric	3 one disk	29 / 8.8	24 / 7.3	10 / 3.0	NA	NA	NA
			3 one disk†	59 / 18.0	59 / 18.0	58 / 17.8	57 / 17.4	57 / 17.4	56 / 17.0
UNIT SIZE (BTUH)	ALTITUDE	Termination Type	Pipe Dia (IN.)*	NUMBER OF 90° ELBOWS					
				1	2	3	4	5	6
60,000	4001 to 5000‡	2 Pipe or 2–In. Concentric	1–1/2	40 / 12.2	35 / 10.7	30 / 9.1	25 / 7.6	20 / 6.1	15 / 9.6
			2	70 / 21.3	70 / 21.3	70 / 21.3	70 / 21.3	70 / 21.3	70 / 21.3
80,000		2 Pipe or 2–In. Concentric	1–1/2	23 / 7.0	18 / 5.5	13 / 4.0	8 / 2.4	NA	NA
			2	70 / 21.3	70 / 21.3	70 / 21.3	70 / 21.3	70 / 21.3	68 / 20.7
100,000		2 Pipe or 2–In. Concentric	2	36 / 11.0	31 / 9.4	26 / 7.9	21 / 6.4	16 / 4.8	11 / 3.4
			2–1/2	70 / 21.3	70 / 21.3	70 / 21.3	70 / 21.3	70 / 21.3	70 / 21.3
120,000		2 Pipe or 3–In. Concentric	3 one disk†	56 / 17.1	55 / 16.8	54 / 16.5	53 / 6.2	52 / 15.8	52 / 15.8
UNIT SIZE (BTUH)	ALTITUDE	Termination Type	Pipe Dia (IN.)*	NUMBER OF 90° ELBOWS					
				1	2	3	4	5	6
60,000	5001 to 6000‡	2 Pipe or 2–In. Concentric	1–1/2	37 / 11.3	32 / 9.8	27 / 8.2	22 / 6.7	17 / 5.2	12 / 3.7
			2	70 / 21.3	70 / 21.3	70 / 21.3	70 / 21.3	70 / 21.3	70 / 21.3
80,000		2 Pipe or 2–In. Concentric	1–1/2	22 / 6.7	17 / 5.2	12 / 3.7	7 / 2.1	NA	NA
			2	70 / 21.3	70 / 21.3	70 / 21.3	70 / 21.3	68 / 20.7	63 / 19.2
100,000		2 Pipe or 2–In. Concentric	2	33 / 10	28 / 8.5	23 / 7.0	18 / 5.5	13 / 4.0	8 / 2.4
			2–1/2	70 / 21.3	70 / 21.3	70 / 21.3	70 / 21.3	70 / 21.3	70 / 21.3
120,000		2 Pipe or 3–In. Concentric	3 one disk†	53 / 16.2	52 / 15.8	50 / 15.2	49 / 14.9	48 / 14.6	47 / 14.3

*See notes on next page.

MAXIMUM ALLOWABLE PIPE LENGTH (FT / M) (CONTINUED)

ALTITUDE	UNIT SIZE (BTUH)	Direct Vent (2-Pipe Only)		NUMBER OF 90° ELBOWS					
		Termination Type	Pipe Dia (IN.)*	1	2	3	4	5	6
6001 to 7000‡	60,000	2 Pipe or 2–In. Concentric	1–1/2	35 / 10.7	30 / 9.1	25 / 7.6	20 / 6.1	15 / 4.6	10 / 3.0
			2	70 / 21.3	70 / 21.3	68 / 20.7	67 / 20.4	66 / 20.11	64 / 19.5
	80,000	2 Pipe or 2–In. Concentric	1–1/2	20 / 6.1	15 / 4.6	10 / 3.0	5 / 1.5	NA	NA
			2	70 / 21.3	70 / 21.3	68 / 20.7	67 / 20.4	62 / 18.9	57 / 17.4
	100,000	2 Pipe or 2–In. Concentric	2	31 / 9.4	26 / 7.9	21 / 6.4	16 / 4.9	11 / 3.4	6 / 1.8
			2–1/2	70 / 21.3	70 / 21.3	68 / 20.7	67 / 20.4	66 / 20.1	64 / 19.5
	120,000	2 Pipe or 3–In. Concentric	3 one disk†	49 / 14.9	48 / 14.6	47 / 14.3	45 / 13.7	44 / 13.4	43 / 13.1
ALTITUDE	UNIT SIZE (BTUH)	Termination Type	Pipe Dia (IN.)*	NUMBER OF 90° ELBOWS					
				1	2	3	4	5	6
7001 to 8000‡	60,000	2 Pipe or 2–In. Concentric	1–1/2	32 / 9.8	27 / 8.2	22 / 6.7	17 / 5.2	12 / 3.7	7 / 2.1
			2	66 /20.1	65 / 19.8	63 / 19.2	62 / 18.9	60 / 18.3	59 / 18.0
	80,000	2 Pipe or 2–In. Concentric	1–1/2	18 / 5.5	13 / 4.0	8 / 2.4	NA	NA	NA
			2	66 / 20.1	65 / 19.8	63 / 19.2	62 / 18.9	57 / 17.4	52 / 15.8
	100,000	2 Pipe or 2–In. Concentric	2	29 / 8.8	24 / 7.3	19 / 5.8	14 / 4.3	9 / 2.7	NA
			2–1/2	66 / 20.1	65 / 19.8	63 / 19.2	62 / 18.9	60 / 18.3	59 / 18
	120,000	2 Pipe or 3–In. Concentric	3 one disk†	46 / 14.0	44 / 13.4	43 / 13.1	41 / 12.5	40 / 12.2	38 / 11.6
ALTITUDE	UNIT SIZE (BTUH)	Termination Type	Pipe Dia (IN.)*	NUMBER OF 90° ELBOWS					
				1	2	3	4	5	6
8001 to 9000‡	60,000	2 Pipe or 2–In. Concentric	1–1/2	30 / 9.1	25 / 7.6	20 / 6.1	15 / 4.6	10 / 3.0	5 / 1.5
			2	62 / 18.9	60 / 17.8	58 / 17.7	56 / 17.1	55 / 16.8	53 / 16.2
	80,000	2 Pipe or 2–In. Concentric	1–1/2	17 / 5.2	12 / 3.1	7 / 2.1	NA	NA	NA
			2	62 / 18.9	60 / 18.3	58 / 17.7	56 / 17.1	51 / 15.5	46 / 14.0
	100,000	2 Pipe or 2–In. Concentric	2	27 / 8.2	22 / 6.7	17 / 5.2	12 / 3.7	7 / 2.1	NA
			2–1/2	62 / 18.9	60 / 18.3	58 / 17.7	56 / 17.1	55 / 16.8	53 / 16.2
	120,000	2 Pipe or 3–In. Concentric	3 one disk†	43 / 13.1	41 / 12.5	39 /11.9	37 / 11.3	35 / 10.7	34 / 10.4
ALTITUDE	UNIT SIZE (BTUH)	Termination Type	Pipe Dia (IN.)*	NUMBER OF 90° ELBOWS					
				1	2	3	4	5	6
9001 to 10000‡	60,000	2 Pipe or 2–In. Concentric	1–1/2	27 / 8.2	22 / 6.7	17 / 5.2	12 / 3.7	7 / 2.1	NA
			2	57 / 17.4	55 / 16.8	53 / 16.2	51 / 15.5	49 / 14.9	47 / 14.3
	80,000	2 Pipe or 2–In. Concentric	1–1/2	15 / 4.6	10 / 3.0	5 / 1.5	NA	NA	NA
			2	57 / 17.4	55 / 16.8	53 / 16.2	51 / 15.5	46 / 14.0	41 / 12.5
	100,000	2 Pipe or 2–In. Concentric	2	24 / 7.3	19 / 5.8	14 / 4.3	9 / 2.7	NA	NA
			2–1/2	57 / 17.4	55 / 16.8	53 / 16.2	51 / 15.5	49 / 14.9	47 / 14.3
	120,000	2 Pipe or 3–In. Concentric	3 one disk†	39 / 11.9	37 / 11.3	35 / 10.7	33 / 10.1	31 / 9.5	29 / 8.8

* Disk usage–Unless otherwise stated, use perforated disk assembly (factory–supplied in loose parts bag).
† Wide radius elbow.
‡ Vent sizing for Canadian installations over 4500 ft (1370m) above sea level are subject to acceptance by the local authorities having jurisdiction.
NA–Not Allowed; pressure switch will not make.

NOTES:

1. Do not use pipe size greater than those specified in table or incomplete combustion, flame disturbance, or flame sense lockout may occur.
2. Size both the combustion–air and vent pipe independently, determine the smallest diameter allowed by the table for each pipe, then use the larger diameter for both pipes.
3. Assume two 45° elbows equal one 90° elbow. Long radius elbows are desirable and may be required in some cases.
4. Elbows and pipe sections within the furnace casing and at the vent termination should not be included in vent length or elbow count.
5. The minimum pipe length is 5 ft for all applications.

MAXIMUM ALLOWABLE EXPOSED VENT PIPE LENGTH (FT / M) WITH INSULATION IN WINTER DESIGN TEMPERATURE AMBIENT*

UNIT SIZE	WINTER DESIGN TEMPERATURE	MAXIMUM PIPE DIAMETER (IN.)	INSULATION THICKNESS†				
			0	3/8	1/2	3/4	1
060–14	20°F / –6.7°C	2	30 / 9.1	55 / 16.8	61 / 18.6	70 / 21.3	70 / 21.3
	0°F / –17.8°C	2	16 / 4.9	33 / 10.1	38 / 11.6	46 / 14.0	53 / 16.2
	–20°F / –28.9°C	2	9 / 2.7	23 / 7.0	26 / 7.9	33 / 10.1	38 / 11.6
080–14 080–20	20°F / –6.7°C	2	37 / 11.2	65 / 19.8	70 / 21.4	70 / 21.3	70 / 21.3
	0°F / –17.8°C	2	20 / 6.1	39 / 11.9	45 / 13.7	55 / 16.8	63 / 19.2
	–20°F / –28.9°C	2	11 / 3.4	27 / 8.3	31 / 9.4	39 / 11.9	45 / 13.7
100–20	20°F / –6.7°C	2–1/2	41 / 12.5	70 / 21.3	70 / 21.3	70 / 21.3	70 / 21.3
	0°F / –17.8°C	2–1/2	21 / 6.4	42 / 12.8	48 / 14.6	59 / 18.0	68 / 20.7
	–20°F / –28.9°C	2–1/2	11 / 3.4	28 / 8.5	33 / 10.1	41 / 12.5	49 / 14.9
120–20	20°F / –6.7°C	3	49 / 14.9	70 / 21.3	70 / 21.3	70 / 21.3	70 / 21.3
	0°F / –17.8°C	3	26 / 7.9	51 / 15.5	58 / 17.7	70 / 21.3	70 /21.3
	–20°F / –28.9°C	3	15 / 4.6	35 / 10.7	40 / 12.2	50 / 15.2	59 / 18.0

* Pipe length (ft/m) specified for maximum pipe lengths located in unconditioned spaces. Pipes located in unconditioned space cannot exceed total allowable pipe length as specified in Table.
†Insulation thickness based on R value of 3.5 per in.

CLEARANCE TO COMBUSTIBLES

58MVC

INSTALLATION

- This forced air furnace is equipped for use with natural gas at altitudes 0 - 10,000 ft (0 - 3,050m), except 140 size furnaces are only approved for altitudes 0 - 7,000 ft. (0 - 2,135m).
- An accessory kit, supplied by the manufacturer, shall be used to convert to propane gas use or may be required for some natural gas applications.
- This furnace is for indoor installation in a building constructed on site. This furnace may be installed in a manufactured (mobile) home when stated on rating plate and using factory authorized kit..
- This furnace may be installed on combustible flooring in alcove or closet at **Minimum Inches Clearance To Combustible Construction** as described below.
- This furnace requires a special venting system. Refer to the installation instructions for parts list and method of installation. In the US this furnace is for use with schedule-40 PVC, PVC-DWV, CPVC, or ABS-DWV pipe, and must not be vented in common with other gas-fired appliances. In Canada, refer to installation instructions for vent materials. Construction through which vent/air intake pipes may be installed is maximum 24 inches (610 mm), minimum 3/4 inches (19 mm) thickness (including roofing materials).

- Cette fournaise à air pulsé est équipée pour utilisation avec gaz naturel et altitudes comprises entre 0 - 3,050m (0 - 10,000 pi),excepté queles fournaises de 140 taille sont pour altitudes comprises entre 0 - 2,135m (0 - 7,000pi).
- Utiliser une trousse de conversion, fournie par le fabricant, pour passer au gaz propane ou pour certaines installations au gaz naturel.
- Cette fournaise à air pulsé est pour installation à l´intérieur dans un bâtiment construit sur place. Cette fournaise à air pulse peut être installée dans une maison préfabriquée (maison mobile) si prescrit par la plaque signalétique et si'l on utilise une trousse specifiée par le fabricant.
- Cette fournaise peut être installée sur un plancher combustible dans un enfoncement ou un placard en observant les **Dégagement Minimum En Pouces Avec Éléments De Construction Combustibles.**
- Cette fournaise nécessite un système d´évacuation spécial. La méthode d´installation et la liste des pièces nécessaires figurent dans les instructions d´installation. Aux Etats-Unis, cette fournaise doit s´utiliser avec la tuyauterie des nomenclatures 40 PVC, PVC-DWV, CPVC, ou ABS-DWV et elle ne peut pas être ventilée conjointment avec d´autres appareils à gaz. Au Canada, referer aux instructions d'installation pour lex matériaux à ventiler. Épaisseur de la construction au travers de laquelle il est possible de faire passer les tuyaux d'aération (admission/évacuation): 24 po (610 mm) maximum, 3/4 po (19mm) minimum (y compris la toiture).

For upflow and downflow applications, furnace must be installed level, or pitched within 1/2" (12.7mm) of level. For a horizontal application, the furnace must be pitched minimum 1/4" (6.35mm) to maximum of 1/2" (12.7mm) forward for proper drainage. See Installation Manual for IMPORTANT unit support details on horizontal applications.

Pour des applications de flux ascendant et descendant, la fournaise doit être installée de niveau ou inclinée à pas plus de 1/2" (12.7mm) du niveau. Pour une application horizontale, la fournaise doit être inclinée entre minimum 1/4" (6.35mm) et maximum 1/2" (12.7mm) du niveau pour le drainage approprié. En cas d´installation en position horizontale, consulter les renseignements IMPORTANTS sur le support dans le manuel d´installation.

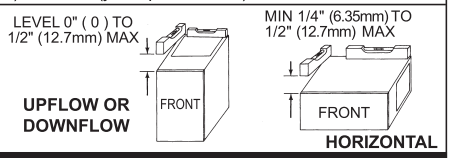

MINIMUM INCHES CLEARANCE TO COMBUSTIBLE CONSTRUCTION

ALL POSITIONS:

* Minimum front clearance for service 24 inches (610mm).

† † 140 size furnaces require 1 inch back clearance to combustible materials.

DOWNFLOW POSITIONS:

† For installation on combustible floors only when installed on special base No. KGASB0201ALL or NAHA01101SB, Coil Assembly, Part No. CAR, CAP, CNPV, CNRV or Coil Casing, Part No. KCAKC, or WENC or WTNC.

HORIZONTAL POSITIONS:

Line contact is permissible only between lines formed by intersections of top and two sides of furnace jacket, and building joists, studs, or framing.

§ Clearance shown is for air inlet and air outlet ends.

Ø 120 and 140 size furnaces require 1 inch bottom clearance to combustible materials.

DÉGAGEMENT MINIMUM EN POUCES AVEC ÉLÉMENTS DE CONSTRUCTION COMBUSTIBLES

POUR TOUS LES POSITIONS:

* Dégagement avant minimum de 24 po (610mm) pour l´entretien.

† † Pour les fournaises de 140 taille, 1 po (25mm) dégagement des matériaux combustibles est requis au-arriere.

POUR LA POSITION COURANT DESCENDANT:

† Pour l´installation sur le plancher combustible seulement quand on utilise la base spéciale, pièce nº KGASB0201ALL ou NAHA01101SB, l´ensemble serpentin, pièce nº CAR, CAP, CNPV, CNRV, ou le carter de serpentin, pièce nº KCAKC ou WENC ou WTNC.

POUR LA POSITION HORIZONTALE:

Le contact n´est permis qúentre les lignes formées par les intersections du dessus et des deuxcôtés de la chemise de la fournaise, et des solives, des montants ou de la charpente du bâtiment.

§ La distance indiquée concerne l´extrémité du tuyau d´arrivée d´air et l´extrémité du tuyau de sortie d´air.

Ø Pour les fournaises de 120 et 140 taille, 1 po (25mm) dégagement des matériaux combustibles est requis au-dessous.

This furnace is approved for UPFLOW, DOWNFLOW and HORIZONTAL installations.

Cette fournaise est approuvée pour l´installation HORIZONTALE et la circulation d´air VERS LE HAUT et VERS LE BAS.

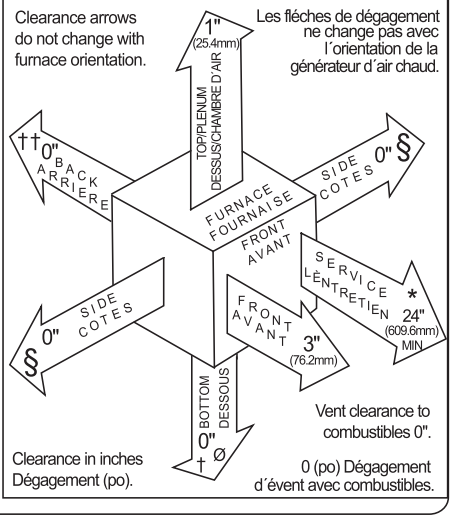

335122-201 REV. B LIT TOP

A08435

TYPICAL INSTALLATIONS

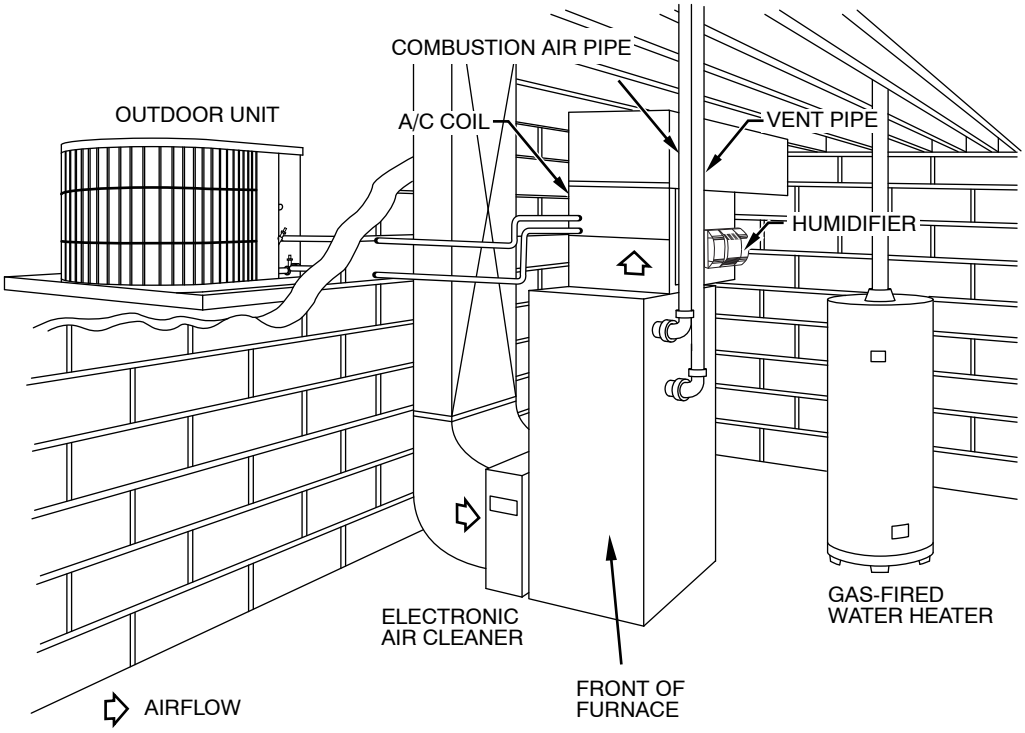

A06511

Upflow Application

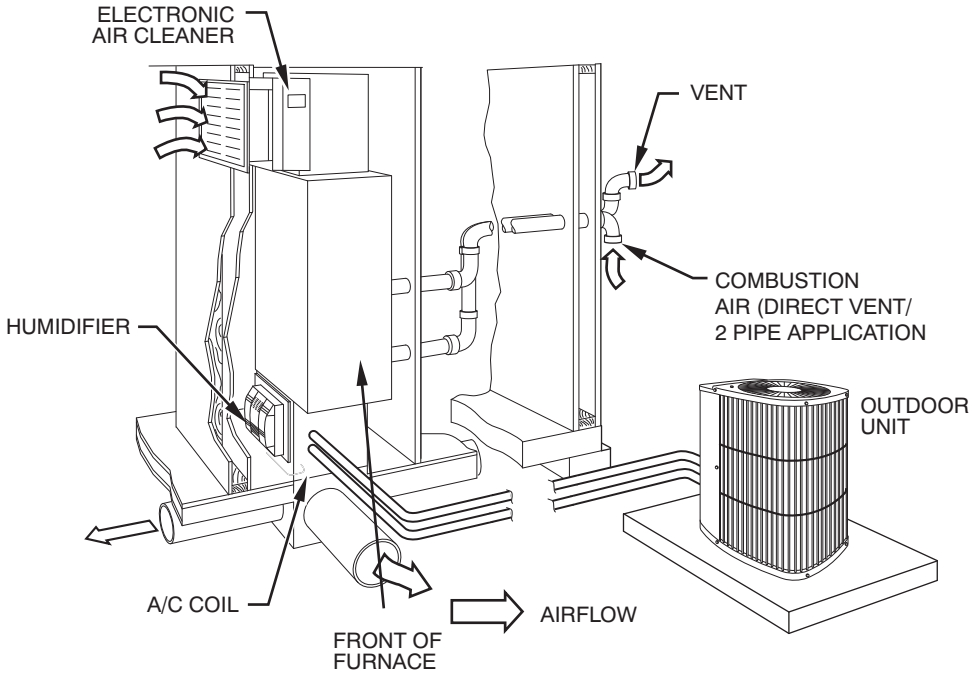

A07799

Downflow Application

58MVC

TYPICAL INSTALLATIONS

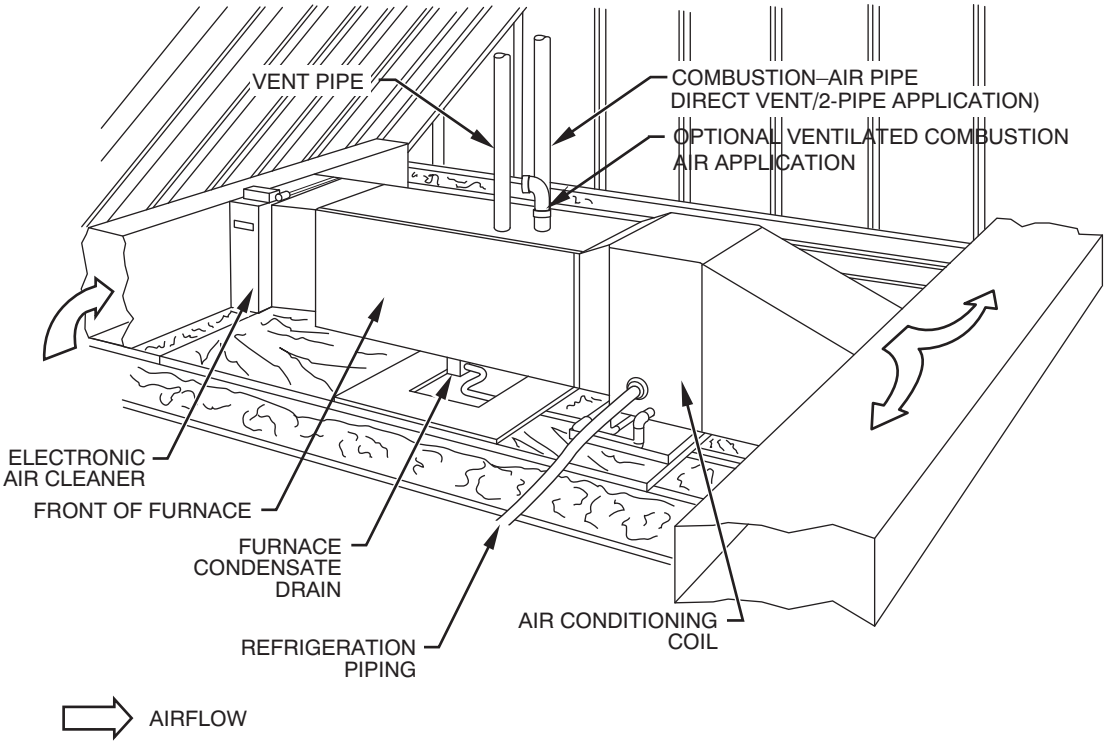

A07800

Attic – Horizontal Application

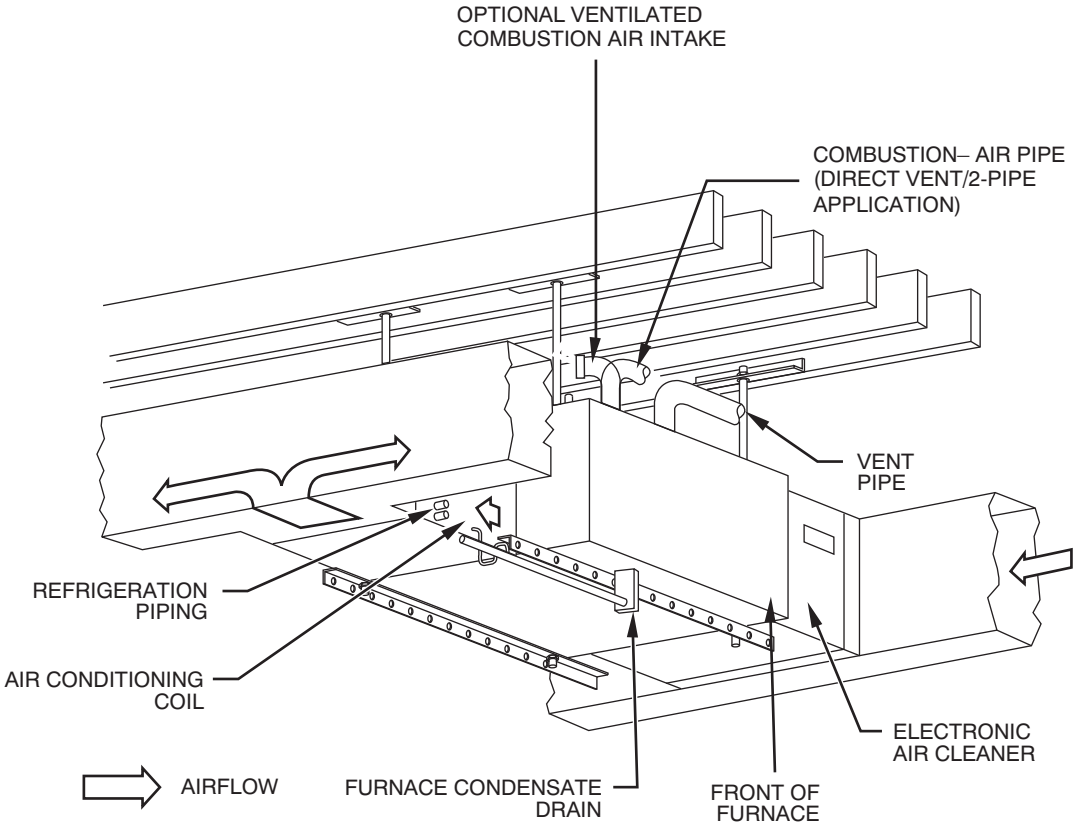

A07801

Crawlspace – Horizontal Application

GUIDE SPECIFICATIONS

General

System Description

Furnish a _____ 4-way multipoise gas-fired condensing furnace for use with natural gas or propane (factory-authorized conversion kit required for propane); furnish cold air return plenum; furnish external media cabinet for use with accessory media filter or standard filter.

Quality Assurance

Unit will be designed, tested and constructed to the current ANSI Z 21.47/CSA 2.3 design standard for gas-fired central furnaces.

Unit will be third party certified by CSA to the current ANSI Z 21.47/CSA 2.3 design standard for gas-fired central furnaces. Unit will carry the CSA Blue Star® and Blue Flame® labels. Unit efficiency testing will be performed per the current DOE test procedure as listed in the Federal Register.

Unit will be certified for capacity and efficiency and listed in the latest GAMA Consumer's Directory of Certified Efficiency Ratings.

Unit will carry the current Federal Trade Commission Energy Guide efficiency label.

Delivery, Storage, and Handling

Unit will be shipped as single package only and is stored and handled per unit manufacturer's recommendations.

Warranty (for inclusion by specifying engineer)

U.S. and Canada only. Warranty certificate available upon request.

Equipment

Blower Wheel and ECM Blower Motor

Galvanized blower wheel shall be centrifugal type, statically and dynamically balanced. Blower motor of ECM type shall be permanently lubricated with sealed ball bearings, of _____hp, and have infinitely variable speed from 250-1300 RPM operating only when 24-VAC motor inputs are provided. Blower motor shall be direct drive and soft mounted to the blower scroll to reduce vibration transmission.

Filters

Furnace shall have reusable-type filters. Filter shall be _____ in. (X) _____ in. An accessory highly efficient Media Filter is available as an option. _____ Media Filter.

Casing

Casing shall be of .030 in. thickness minimum, pre-painted galvanized steel.

ECM Inducer Motor

ECM Inducer motor shall be variable speed design, soft mounted to assembly to reduce vibration transmission.

Primary Heat Exchangers

Primary heat exchangers shall be 3-Pass 20 gauge corrosion-resistant aluminized steel of fold-and-crimp sectional design and applied operating under negative pressure.

Secondary Heat Exchangers

Secondary heat exchangers shall be of a flow-through design having a patented interior laminate coating of polypropylene for greater corrosion resistance with fold-and-crimp design and applied operating under negative pressure.

Controls

Controls shall include a micro-processor-based integrated electronic control board with at least 16 service troubleshooting codes displayed via diagnostic flashing LED light on the control, a self-test feature that checks all major functions of the furnace, and a replaceable automotive-type circuit protection fuse. Multiple operational settings available, including separate blower speeds for low heat, medium heat, high heat, low cooling, high cooling and continuous fan. Continuous fan speed may be adjusted from the thermostat. Cooling airflow will be selectable between 350 or 400 CFM per ton of air conditioning. Features will also include temporary reduced airflow in the cooling mode for improved dehumidification when an Infinity Control or Thermidistat is selected as the thermostat.

Operating Characteristics

Heating capacity shall be _____ Btuh input; _____ Btuh output capacity.

Fuel Gas Efficiency shall be 92.1 to 95% AFUE.

Air delivery shall be _____ cfm minimum at 0.50 in. wc. external static pressure.

Dimensions shall be: depth_____in.; width _____in.; height_____in. (casing only). Height shall be _____in. with A/C coil and _____in. overall with plenum.

Electrical Requirements

Electrical supply shall be 115 volts, 60 Hz, single-phase (nominal). Minimum wire size shall be _____AWG; maximum fuse size of HACR-type designated circuit breaker shall be _____ amps.

Special Features

Refer to section of the product data identifying accessories and descriptions for specific features and available enhancements.

Copyright 2009 Carrier Corp. • 7310 W. Morris St. • Indianapolis, IN 46231 Printed in U.S.A. Edition Date: 09/09

Catalog No: 58MVC–3PD

Manufacturer reserves the right to change, at any time, specifications and designs without notice and without obligations.

Replaces: 58MVC–2PD