59SC2D
Single–Stage
4–Way Multipoise
Condensing Gas Furnace

Carrier
turn to the experts

Product Data

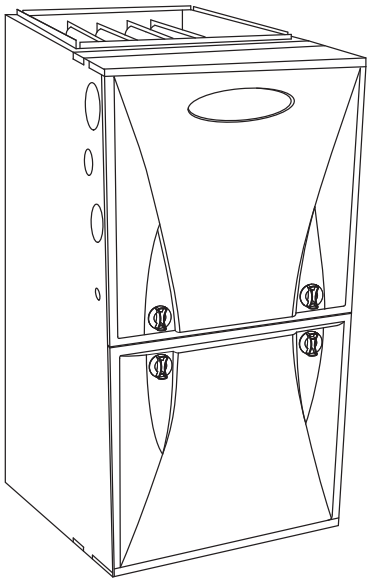

A11263

The 59SC2D Multipoise Comfort™ 92 Condensing Gas Furnace features SEER-boosting year-round electrical efficiency when paired with a compatible condensing unit. Energy efficiency is at the heart of this furnace with up to 92.1% AFUE gas efficiency and the electrically-efficient fixed-speeds, constant torque (FCT) ECM blower motor. This gas furnace also features 4-way multipoise installation flexibility, and is available in nine model sizes. The 59SC2D can be vented for direct vent/two-pipe, ventilated combustion air, or single-pipe applications. Units are design certified in Canada, and are certified for mobile/manufactured home use.

Certified System ISO 9001 Quality

AHRI CERTIFIED www.ahridirectory.org

Use of the AHRI Certified TM Mark indicates a manufacturer's participation in the program. For verification of certification for individual products, go to www.ahridirectory.org .

CERTIFIED

DESIGN CERTIFIED

FACTORY AUTHORIZED PARTS

Comfort SERIES

ENERGY STAR QUALIFIED ONLY IN U.S. SOUTH: AL, AZ, AR, CA, DC, DE, FL, GA, HI, KY, LA, MD, MS, NV, NM, NC, OK, SC, TN, TX, VA

PERFORMANCE

- Fixed-speeds, constant torque (FCT) ECM blower motor for electrically efficient operation all year long in heating, cooling and continuous fan operation.
- Single-speed inducer motor, and single-stage gas valve.
- Silicon Nitride PowerHeat™ Hot Surface Igniter.
- Adjustable blower speed for heating and cooling.
- Aluminized-steel primary heat exchanger.
- Stainless-steel condensing secondary heat exchanger.

INSTALLATION FLEXIBILITY

- 4-way multipoise design for upflow, downflow or horizontal installation, with unique vent elbow for 12 different venting options, including optional venting through-the-cabinet downflow venting capability.
- Factory-configured ready for upflow applications.
- Ideal height 35" (889 mm) cabinet: short enough for taller coils, but still allows enough room for service.
- Direct-vent/sealed combustion, single-pipe venting or ventilated combustion air.

APPLICATIONS

- Approved for Twinning applications with accessory kit (060E17--14, 080E17--16, 080E21--20, 100E21--20, 120E24--20 models, only).
- Approved for Manufactured Housing/Mobile Home applications with MH accessory kit.
- Convertible to propane with gas conversion accessory kit.

CERTIFICATIONS

- All sizes meet ENERGY STAR® South regional standards.
- Cabinet air leakage less than 2.0% at 1.0 in. W.C. and cabinet air leakage less than 1.4% at 0.5 in. W.C. when tested in accordance with ASHRAE standard 193.
- All sizes can be installed in California air quality management districts with a 40 ng/J NOx emissions limit.

FURNACE	CASING DIMENSIONS (IN.)			RATED HEATING OUTPUT†	AFUE		ENERGY STAR®	HEATING AIRFLOW		COOLING CFM @ 0.5 ESP (in. W.C.)	MOTOR HP
	H	D	W	BTUH	UPFLOW/ HORIZON-TAL	DOWN-FLOW		Heating CFM	Heating ESP (in. W.C.)		
59SC2D040E14--10	35	29.5	14.2	37,000	92.1%	92.1%	SOUTH	765	0.10	985	1/2
59SC2D040E17--12	35	29.5	17.5	37,000	92.1%	92.1%	SOUTH	740	0.10	985	1/2
59SC2D060E14--12	35	29.5	14.2	56,000	92.1%	92.1%	SOUTH	1100	0.12	1035	1/2
59SC2D060E17--14	35	29.5	17.5	56,000	92.1%	92.1%	SOUTH	1000	0.15	1190	1/2
59SC2D080E17--16	35	29.5	17.5	75,000	92.1%	92.1%	SOUTH	1350	0.15	1370	1/2
59SC2D080E21--20	35	29.5	21.0	75,000	92.1%	92.1%	SOUTH	1460	0.15	1815	3/4
59SC2D100E21--20	35	29.5	21.0	93,000	92.1%	92.1%	SOUTH	1675	0.20	1855	3/4
59SC2D100E21--22	35	29.5	21.0	93,000	92.1%	92.1%	SOUTH	1630	0.20	2045	1
59SC2D120E24--20	35	29.5	24.0	111,000	92.1%	92.1%	SOUTH	1735	0.20	1800	3/4

† Capacity in accordance with DOE test procedures. Ratings are position dependent. See rating plate.
‡ Heating CFM at factory default blower motor heating tap settings.
ESP – External Static Pressure

FEATURES AND BENEFITS

The 59SC2D gas furnaces are ENERGY STAR® qualified only in U.S. South: AL, AZ, AR, CA, DC, DE, FL, GA, HI, KY, LA, MD, MS, NV, NM, NC, OK, SC, TN, TX, VA.

HYBRID HEAT® Dual Fuel System — This system can provide more control over your monthly energy bills by automatically selecting the most economical method of heating. With HYBRID HEAT components, our system automatically switches between the gas furnace and the electric heat pump as outside temperatures change to maintain greater efficiency and comfort than with any traditional single-source heating system. The heat pump also delivers high-efficiency cooling in the summer.

PowerHeat™ Igniter — Carrier's unique SiN igniter is not only physically robust but it is also electrically robust. It is capable of running at line voltage and does not require complex voltage regulators as do other brands. This unique feature further enhances the gas furnace reliability and continues Carrier's tradition of technology leadership and innovation in providing a reliable and durable product.

Comfort™FCT-ECM Blower Motor — This basic fixed-speeds, constant torque (FCT) ECM, or electronically commutated motor, can provide an efficiency enhancement for select Carrier air conditioner or heat pump systems. It uses less electrical power than its PSC counterpart and also has a wider range of speeds.

Reliable Heat Exchanger Design — The aluminized steel, clam shell primary heat exchanger was re-engineered to achieve greater efficiency out of a smaller size. The first two passes of the heat exchanger are based on the current 80% product, a design with more than ten years of field-proven performance and success. These innovations, paired with the continuation of a crimped, no-weld seam create an efficient, robust design for this essential component.

The condensing heat exchanger, a stainless steel fin and tube design, is positioned in the furnace to extract additional heat. Stainless steel coupling box componentry between heat exchangers has exceptional corrosion resistance in both natural gas and propane applications.

Media Filter Cabinet — Enhanced indoor air quality in the home is made easier with our optional media filter cabinet accessory. When installed as a part of the system, this cabinet allows for easy and convenient addition of a Carrier high efficiency air filter.

4-Way Multipoise Design — One model for all applications – there is no need to stock special downflow or horizontal models when one unit will do it all.

Direct or Single-pipe Venting, or Optional Ventilated Combustion Air — This furnace can be installed as a 2-pipe (Direct Vent) furnace, in an optional ventilated combustion air application, or in single-pipe, non-direct vent applications. This provides added flexibility to meet diverse installation needs.

Sealed Combustion System — This furnace brings in combustion air from outside the furnace, which results in especially quiet operation. By sealing the entire combustion vestibule, the entire furnace can be made quieter, not just the burners.

Insulated Casing — Foil-faced insulation in the heat exchanger section of the casing minimizes heat loss.

Monoport Burners — The burners are specially designed and finely tuned for smooth, quiet combustion and economical operation.

Bottom Closure — Factory-installed for side return; easily removable for bottom return. The multi-use bottom closure can also serve for roll-out protection in horizontal applications, and act as the bottom closure for the optional return air base accessory.

Blower Access Panel Switch — Automatically shuts off 115-v power to furnace whenever blower access panel is opened.

Quality Registration — Our furnaces are engineered and manufactured under an ISO 9001 registered quality system.

Certifications — This furnace is CSA (AGA and CGA) design certified for use with natural and propane gases. The furnace is factory-shipped for use with natural gas. A CSA listed gas conversion kit is required to convert furnace for use with propane gas. The efficiency is AHRI efficiency rating certified.

SPECIFICATIONS

The furnace should be sized to provide 100 percent of the design heating load requirement plus any margin that occurs because of furnace model size capacity increments. None of the furnace model sizes can be used if the heating load is 20,000 BTU or lower. Use Air Conditioning Contractors of America (Manual J and S); American Society of Heating, Refrigerating, and Air-Conditioning Engineers; or other approved engineering method to calculate heating load estimates and select the furnace. Excessive oversizing of the furnace may cause the furnace and/or vent to fail prematurely, customer discomfort and/or vent freezing.

Failure to follow these guidelines is considered faulty installation and/or misapplication of the furnace; and resulting failure, damage, or repairs may impact warranty coverage.

Heating Capacity and Efficiency		040E14--10	040E17--12	060E14--12	060E17--14	080E17--16	080E21--20	100E21--20	100E21--22	120E24--20
Input (BTUH)		40,000	40,000	60,000	60,000	80,000	80,000	100,000	100,000	120,000
Output (BTUH)		37,000	37,000	56,000	56,000	75,000	75,000	93,000	93,000	111,000
Certified Temperature Rise Range °F (°C)		35 – 65 (19 – 36)	35 – 65 (19 – 36)	35 – 65 (19 – 36)	35 – 65 (19 – 36)	40 – 70 (22 – 39)	35 – 65 (19 – 36)	40 – 70 (22 – 39)	40 – 70 (22 – 39)	45 – 75 (25 – 42)
Airflow Capacity and Blower Data										
Rated External Static Pressure (in. w.c.)	Heating	0.1	0.10	0.12	0.15	0.15	0.15	0.20	0.20	0.20
	Cooling	0.50	0.50	0.50	0.50	0.50	0.50	0.50	0.50	0.50
Airflow Delivery @ Rated ESP (CFM)	Heating	765	740	1100	1000	1350	1460	1675	1630	1735
	Cooling	985	985	1035	1190	1370	1815	1855	2045	1800
Cooling Capacity (tons) @ 400, 350 CFM/ton	400 CFM/ton	2	2.50	2.50	3	3.50	4.50	4.50	5.00	4.50
	350 CFM/ton	2.50	3	3	3.50	4	5	5	5.5	5
Direct–Drive Motor Type		Electronically Commutated Motor (ECM)								
Direct–Drive Motor HP		1/2	1/2	1/2	1/2	1/2	3/4	3/4	1	3/4
Motor Full Load Amps		6.4	6.4	6.4	6.4	6.4	8.8	8.8	11.7	8.8
RPM Range		600 – 1200								
Speed Selections		5								
Blower Wheel Dia x Width	in.	11 x 7	11 x 8	11 x 7	11 x 8	11 x 8	11 x 10	11 x 10	11 x 10	11 x 11
Air Filtration System		Field Supplied Filter								
Filter Used for Certified Watt Data		KGAWF1506UFR								
Electrical Data										
Input Voltage	Volts–Hertz–Phase	115–60–1								
Operating Voltage Range	Min–Max	104–127								
Maximum Input Amps	Amps	7.10	7.10	7.20	7.20	7.20	9.60	9.70	12.60	9.70
Unit Ampacity	Amps	9.80	9.80	9.90	9.90	9.90	12.90	13.00	16.70	13.00
Minimum Wire Size	AWG	14	14	14	14	14	14	14	12	14
Maximum Wire Length @ Minimum Wire Size	Feet	37	37	37	37	37	28	28	34	28
	(M)	(11.50)	(11.50)	(11.40)	(11.40)	(11.40)	(8.70)	(8.70)	(10.50)	(8.70)
Max. Fuse/Ckt Bkr (Time–Delay Type Recommended)	Amps	15	15	15	15	15	15	15	20	15
Transformer Capacity (24vac output)		40 VA								
External Control Power Available	Heating	27.9 VA								
	Cooling	34.6 VA								
Controls										
Gas Connection Size		1/2” – NPT								
Burners (Monoport)		2	2	3	3	4	4	5	5	6
Gas Valve (Redundant)	Manufacturer	White Rodgers™								
Minimum Inlet Gas pressure (in. w.c.)		4.50								
Maximum Inlet Gas pressure (in. w.c.)		13.60								
Manufactured (Mobile) Home Kit		See Accessory Listing								
Ignition Device		Silicon Nitride								
Heating Blower Control (Heating Off–Delay)		Adjustable: 90, 120, 150, 180 seconds								
Cooling Blower Control (Time Delay Relay)		90 seconds								
Communication System		*none*								
Thermostat Connections		Com 24V, R, W, G, Y								
Accessory Connections		EAC (115vac); HUM (24vac); 1–stg AC (via Y)								

* See Accessory List for part numbers available.

MODEL NUMBER NOMENCLATURE

1, 2 Gas Furnace 59	3 Heating Stages M	4 Tier N	5 Min. AFUE/NOx 7	6 Major Series B	7, 8, 9 Heating Input 060	10 Motor Type E	11, 12 Width 17	13 Voltage (1-phase) 1	14 Minor Series 1	15, 16 Airflow 16
58 = 80% Non-Condensing 59 = 90%+ Condensing										08 = 800 CFM 10 = 1000 CFM 12 =1200 CFM 14 = 1400 CFM 16 = 1600 CFM 20 = 2000 CFM 22 = 2200 CFM
		B = Base C = Comfort E = Export N = Infinity P = Performance U = Ultra Low Nox	0 = Std. NOx 80% 1 = 80% Low Nox — 2 = 92% 5 = 95% 6 = 96% 7 = 97% 8 = 98%			C = Comm. Variable-Speed Constant Airflow (VCA) ECM E= Fixed-Speeds Constant Torque (FCT) ECM V = Variable-Speed Constant Torque (VCT) ECM			1 2 3 —	
	M = Modulating S = Single Stage T = Two Stage				026 = 26,000 BTU 040 = 40,000 BTU 060 = 60,000 BTU — 155 = 155,000 BTU		14 - 14.2" 17 - 17.5" 21 - 21.0" 24 - 24.5"	1 = 110V/60Hz 2 = 230V/50Hz		
				A B C —						

A190403

For California Residents:

If installed with a manufactured (mobile) home conversion kit in SCAQMD: This furnace does not meet the SCAQMD Rule 1111 14 ng/J NOx emission limit, and thus is subject to a mitigation fee of up to $450. This furnace is not eligible for the Clean Air Furnace Rebate Program: www.CleanAirFurnaceRebate.com

FURNACE COMPONENTS

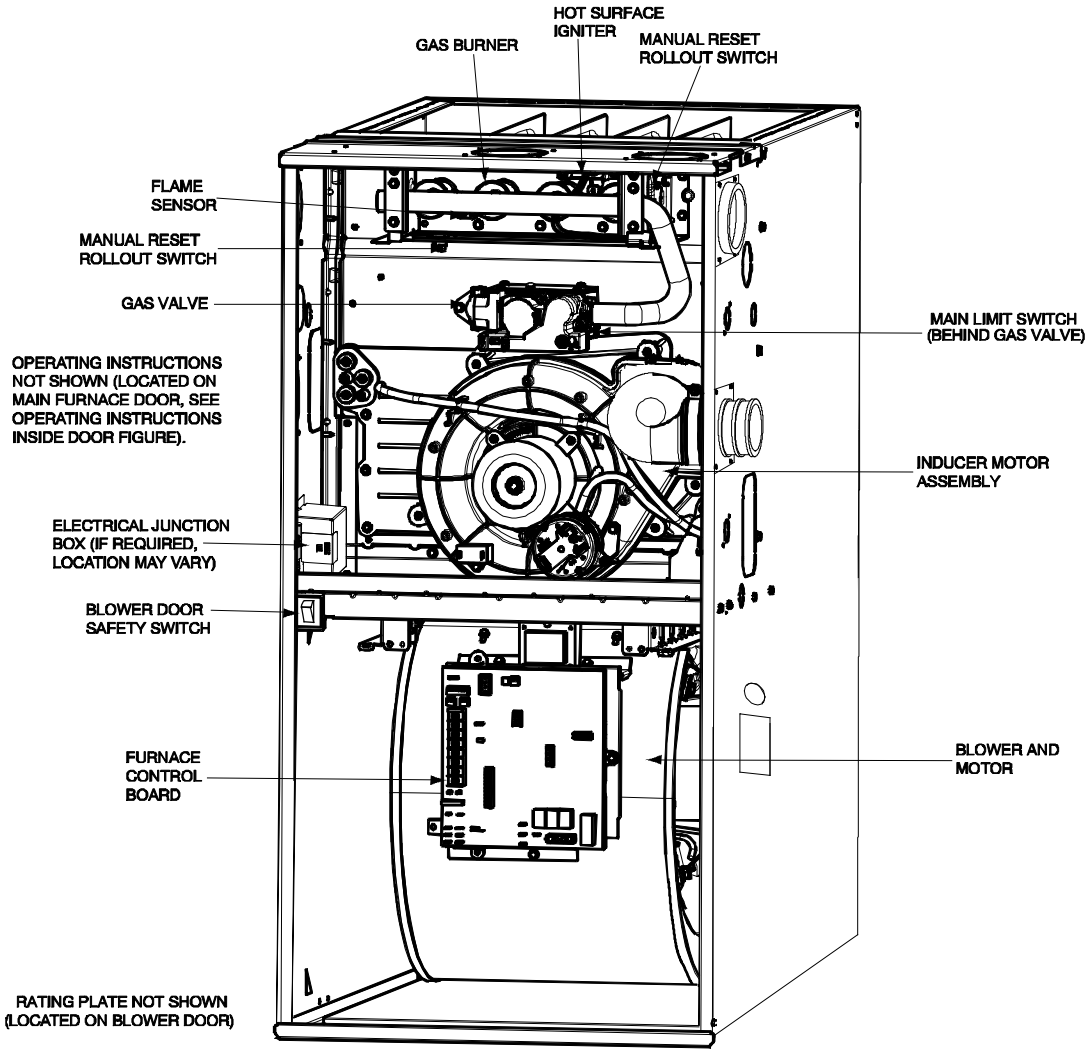

A190145

ACCESSORIES

DESCRIPTION	PART NUMBER	040E14–10	040E17–12	060E14–12	060E17–14
Vent Kit - Through the Cabinet	KGADC0101BVC	X	X	X	X
Vent Terminal - Concentric - 2” (51 mm)	KGAVT0701CVT	See Venting Tables			
Vent Terminal - Concentric - 3” (76 mm)	KGAVT0801CVT				
Vent Terminal Bracket - 2” (51 mm)	KGAVT0101BRA				
Vent Terminal Bracket - 3” (76 mm)	KGAVT0201BRA				
Vent Kit – Rubber Coupling	KGAAC0101RVC	See Venting Tables			
Freeze Protect Kit - Condensate Drain Line Tape	KGAHT0101CFP	X	X	X	X
Freeze Protect Kit - Condensate Trap with Heat Pad	KGAHT0201CFP	X	X	X	X
CPVC to PVC Drain Adapters - 1/2” CPVC to 3/4” PVC	KGAAD0110PVC	X	X	X	X
Horizontal Trap Grommet - Direct Vent	KGACK0101HCK	All DV Horizontal			
Condensate Neutralizer Kit	P908–0001	X	X	X	X
External Trap Kit	KGBET0201ETK	X	X	X	X
Downflow Furnace Base Kit for Combustible Floors	KGASB0201ALL	X	X	X	X
Coil Adapter Kits – No Offset	KGADA0101ALL	X	X	X	X
Coil Adapter Kits – Single Offset	KGADA0201ALL	X	X	X	X
Coil Adapter Kits – Double Offset	KGADA0301ALL	X	X	X	X
Return Air Base (Upflow Applications) 14.0” wide	KGARP0301B14	X		X	
Return Air Base (Upflow Applications) 17.5” wide	KGARP0301B17		X		X
IAQ Device Duct Adapters 20.0–in. IAQ to 16 in. Side Return	KGAAD0101MEC	20”x25” IAQ Devices			
IAQ Device Duct Adapters 24.0–in. IAQ to 16 in. Side Return	KGAAD0201MEC	24”x25” IAQ Devices			
Mobile Home Kit	KGCMH0601KIT	X	X	X	X
Gas Conversion Kit - Nat to LP	AGAGC9NPS01A	X	X	X	X
Gas Conversion Kit - LP to Nat	AGAGC9PNS01A	X	X	X	X
Gas Valve Tower Port Adapter Kit	92–1003	X	X	X	X
Twinning Kit	AGATWNDTE01A				X
Blower Speed Tap Jumper Kit (10 piece)	AGABLRJMP10A	X	X	X	X
Bottom Filter Rack – 14 3/16 inches (360 mm)	KGBFR0401B14	X		X	
Bottom Filter Rack – 17.5 inches (455 mm)	KGBFR0501B17		X		X
Filter Pack (6 pack) – Washable 16x25x1 (406x635x25 mm)	KGAWF1306UFR	X	X	X	X
Filter Pack (6 pack) – Washable 24x25x1 (610x635x25 mm)	KGAWF1506UFR	X	X	X	X

X = Used with the model furnace

DESCRIPTION	PART NUMBER	080E17–16	080E21–20	100E21–20	100E21–22	120E24–20
Vent Kit - Through the Cabinet	KGADC0101BVC	X	X	X	X	X
Vent Terminal - Concentric - 2” (51 mm)	KGAVT0701CVT	See Venting Tables				
Vent Terminal - Concentric - 3” (76 mm)	KGAVT0801CVT					
Vent Terminal Bracket - 2” (51 mm)	KGAVT0101BRA					
Vent Terminal Bracket - 3” (76 mm)	KGAVT0201BRA					
Vent Kit – Rubber Coupling	KGAAC0101RVC	See Venting Tables				
Freeze Protect Kit - Condensate Drain Line Tape	KGAHT0101CFP	X	X	X	X	X
Freeze Protect Kit - Condensate Trap with Heat Pad	KGAHT0201CFP	X	X	X	X	X
CPVC to PVC Drain Adapters - 1/2” CPVC to 3/4” PVC	KGAAD0110PVC	X	X	X	X	X
Horizontal Trap Grommet - Direct Vent	KGACK0101HCK	All DV Horizontal				
Condensate Neutralizer Kit	P908–0001	X	X	X	X	X
External Trap Kit	KGBET0201ETK	X	X	X	X	X
Downflow Furnace Base Kit for Combustible Floors	KGASB0201ALL	X	X	X	X	X
Coil Adapter Kits – No Offset	KGADA0101ALL	X	X	X	X	X
Coil Adapter Kits – Single Offset	KGADA0201ALL	X	X	X	X	X
Coil Adapter Kits – Double Offset	KGADA0301ALL	X	X	X	X	X
Return Air Base (Upflow Applications) 17.5” wide	KGARP0301B17	X				
Return Air Base (Upflow Applications) 21.0” wide	KGARP0301B21		X	X	X	
Return Air Base (Upflow Applications) 24.5” wide	KGARP0301B24					X
IAQ Device Duct Adapters 20.0–in. IAQ to 16 in. Side Return	KGAAD0101MEC	20”x25” IAQ Devices				
IAQ Device Duct Adapters 24.0–in. IAQ to 16 in. Side Return	KGAAD0201MEC	24”x25” IAQ Devices				
Mobile Home Kit	KGCMH0601KIT	X	X	X	X	X
Gas Conversion Kit - Nat to LP	AGAGC9NPS01A	X	X	X	X	X
Gas Conversion Kit - LP to Nat	AGAGC9PNS01A	X	X	X	X	X
Gas Valve Tower Port Adapter Kit	92–1003	X	X	X	X	X
Twinning Kit	AGATWNDTE01A	X	X	X		X
Blower Speed Tap Jumper Kit (10 piece)	AGABLRJMP10A	X	X	X	X	
Bottom Filter Rack – 17.5 inches (455 mm)	KGBFR0501B17	X				
Bottom Filter Rack – 21 inches (533 mm)	KGBFR0601B21		X	X	X	
Bottom Filter Rack – 24.5 inches (622 mm)	KGBFR0701B24					X
Filter Pack (6 pack) – Washable 16x25x1 (406x635x25 mm)	KGAWF1306UFR	X	X	X	X	X
Filter Pack (6 pack) – Washable 24x25x1 (610x635x25 mm)	KGAWF1506UFR	X	X	X	X	X

X = Used with the model furnace

ACCESSORIES (CONTINUED)

DESCRIPTION		
Gas Orifice Kit - #42 (Nat Gas)	LH32DB207	See Installation Instructions for model, altitude, and heat value usages.
Gas Orifice Kit - #43 (Nat Gas)	LH32DB202	
Gas Orifice Kit - #44 (Nat Gas)	LH32DB200	
Gas Orifice Kit - #45 (Nat Gas)	LH32DB205	
Gas Orifice Kit - #46 (Nat Gas)	LH32DB208	
Gas Orifice Kit - #47 (Nat Gas)	LH32DB078	
Gas Orifice Kit - #48 (Nat Gas)	LH32DB076	
Gas Orifice Kit - #54 (LP)	LH32DB203	
Gas Orifice Kit - #55 (LP)	LH32DB201	
Gas Orifice Kit - #56 (LP)	LH32DB206	
Gas Orifice Kit - 1.25mm (LP)	LH32DB209	
Gas Orifice Kit - 1.30mm (LP)	LH32DB210	

DESCRIPTION	ACCESSORY
HUMIDIFIER	Model HUM
HEAT RECOVERY VENTILATOR	Model HRV
ENERGY RECOVERY VENTILATOR	Model ERV
UV LIGHTS	Model UVL

Carrier has a wide variety of thermostats for your system, please visit **www.Carrier.com** to see all thermostat and IAQ products.

DESCRIPTION	ACCESSORY	CABINET WIDTH			
		14”	17”	21”	24”
Carrier Carbon Monoxide Alarm (10 pack)	COALMCCNRB02–A10	X	X	X	X
Carrier Infinity Air Purifier - 16x25 (407x635 mm)	DGAPAXX1625	X	X		
Carrier Infinity Air Purifier - 20x25 (508x635 mm)	DGAPAXX2025			X	X
Carrier Infinity Air Purifier Repl. Filter- 16x25 (407x635 mm)	PGAPXCAR1625A02	X	X		
Carrier Infinity Air Purifier Repl. Filter- 20x25 (508x635 mm)	PGAPXCAR2025A02			X	X
Cartridge Media Filter - 16” (407 mm) (MERV 11)	FILXXCAR0116	X	X		
Cartridge Media Filter - 16” (407 mm) (MERV 8)	FILXXCAR0016	X	X		
Cartridge Media Filter - 20” (508 mm) (MERV 8)	FILXXCAR0020			X	
Cartridge Media Filter - 20” (508 mm) (MERV11)	FILXXCAR0120			X	
Cartridge Media Filter - 24” (610 mm) (MERV 8)	FILXXCAR0024				X
Cartridge Media Filter - 24” (610 mm) (MERV11)	FILXXCAR0124				X
EZ Flex Cabinet Side or Bottom – 16”	EZXCAB– –0016	X	X		
EZ Flex Cabinet Side or Bottom – 20”	EZXCAB– –0020			X	X
EZ Flex Replacement Filters 16” MERV 10	EXPXXFIL0016	X	X		
EZ Flex Replacement Filters 16” MERV 13	EXPXXFIL0316	X	X		
EZ Flex Replacement Filters 20” MERV 10	EXPXXFIL0020			X	
EZ Flex Replacement Filters 20” MERV 13	EXPXXFIL0320			X	
EZ Flex Replacement Filters 24” MERV 10	EXPXXFIL0024				X
EZ Flex Replacement Filters 24” MERV 13	EXPXXFIL0324				X
EZ-Flex Filter with End Caps - 16” (407 mm) (MERV 10)	EXPXXUNV0016	X	X		
EZ-Flex Filter with End Caps - 16” (407 mm) (MERV 13)	EXPXXUNV0316	X	X		
EZ-Flex Filter with End Caps - 20” (508 mm) (MERV 10)	EXPXXUNV0020			X	
EZ-Flex Filter with End Caps - 20” (508 mm) (MERV 13)	EXPXXUNV0320			X	
EZ-Flex Filter with End Caps - 24” (610 mm) (MERV 10)	EXPXXUNV0024				X
EZ-Flex Filter with End Caps - 24” (610 mm) (MERV 13)	EXPXXUNV0324				X
Media Filter Cabinet – 20”	FILCABXL0020			X	
Media Filter Cabinet – 24”	FILCABXL0024				X
Media Filter Cabinet –16”	FILCABXL0016	X	X		

AIR DELIVERY - CFM (WITH FILTER)

FURNACE SIZE	SPEED TAPS	Function	EXTERNAL STATIC PRESSURE (IN.W.C.)									
			0.10	0.20	0.30	0.40	0.50	0.60	0.70	0.80	0.90	1.00
040E14--10	Gray	Cooling. Do not use for heating	1120	1085	1055	1015	985	950	915	880	850	815
	Yellow	Cooling. Do not use for heating	925	885	850	810	775	735	695	660	620	580
	Blue [3]	Heating or alt Cooling	765	725	685	640	605	565	525	475	430	375
	Orange [3]	Alt Cooling or alt Heating	750	710	665	625	585	545	500	455	405	350
	Red [3, 7]	Alt Cooling. Do not use for heating	510	435	400	345	290	230	190	145	–	–
040E17--12	Gray	Cooling. Do not use for heating	1120	1090	1055	1020	985	950	915	875	840	805
	Yellow	Cooling. Do not use for heating	910	880	845	800	760	720	680	640	595	555
	Orange	Alt Cooling or alt Heating	835	795	760	720	680	630	585	540	505	475
	Blue [3]	Heating or alt Cooling	740	700	660	610	565	520	475	440	405	365
	Red [3, 7]	Alt Cooling. Do not use for heating	555	500	445	395	350	315	260	205	–	–
060E14--12	Gray	Cooling. Do not use for heating	1165	1140	1110	1080	1035	1000	960	920	870	825
	Blue	Heating or alt Cooling	1105	1085	1050	1010	975	930	890	845	795	755
	Yellow	Alt Cooling or alt Heating	1040	1000	960	920	880	840	785	740	690	640
	Orange [3]	Alt Cooling or alt Heating	840	795	750	705	655	610	555	500	450	395
	Red [3]	Alt Cooling. Do not use for heating	745	615	555	510	450	390	340	290	230	195
060E17--14	Gray	Cooling. Do not use for heating	1335	1300	1275	1230	1190	1135	1090	1040	985	925
	Yellow	Alt Cooling or alt Heating	1170	1135	1095	1045	995	940	890	825	770	700
	Blue [3]	Heating or alt Cooling	1010	965	910	855	800	735	675	615	555	505
	Orange [3]	Alt Cooling or alt Heating	960	905	855	800	740	675	615	555	505	460
	Red [3]	Alt Cooling. Do not use for heating	910	735	675	605	535	485	430	375	330	265
080E17--16	Gray	Cooling. Do not use for heating	1545	1505	1460	1420	1365	1320	1275	1225	1180	1135
	Blue	Heating or alt Cooling	1375	1330	1275	1225	1175	1125	1075	1025	970	920
	Yellow [3]	Alt Cooling or alt Heating	1195	1140	1090	1040	985	930	875	815	765	705
	Orange [3]	Alt Cooling. Do not use for heating	1015	955	900	845	780	730	670	615	550	490
	Red [3, 7]	Alt Cooling. Do not use for heating	945	735	575	520	450	375	325	260	–	–
080E21--20	Gray [5, 6]	Cooling. Do not use for heating	2020	1965	1920	1865	1815	1760	1705	1650	1595	1545
	Yellow	Alt Cooling or alt Heating	1650	1590	1535	1475	1425	1370	1315	1260	1205	1145
	Blue	Heating or alt Cooling	1495	1430	1365	1310	1260	1200	1145	1085	1030	970
	Orange	Alt Cooling or alt Heating	1420	1355	1290	1235	1175	1120	1060	1005	945	890
	Red [3]	Alt Cooling. Do not use for heating	1200	1120	1060	995	940	875	810	750	685	625
100E21--20	Gray [5, 6]	Cooling. Do not use for heating	2060	2010	1955	1905	1850	1800	1750	1690	1630	1565
	Blue	Heating or alt Cooling	1730	1675	1620	1565	1510	1455	1385	1325	1270	1210
	Yellow	Alt Cooling or alt Heating	1685	1630	1570	1515	1460	1410	1345	1280	1225	1170
	Orange [3]	Alt Cooling or alt Heating	1445	1370	1310	1250	1185	1115	1055	1005	950	875
	Red [3]	Alt Cooling. Do not use for heating	1235	1155	1090	1020	945	900	835	755	690	635
100E21--22	Gray [5, 6]	Cooling. Do not use for heating.	2205	2160	2120	2085	2045	2005	1965	1925	1885	1840
	Yellow [5, 6]	Alt Cooling. Do not use for heating.	2120	2080	2035	1995	1955	1915	1875	1830	1790	1745
	Orange	Alt Cooling or alt Heating	1800	1755	1710	1665	1615	1570	1520	1470	1420	1375
	Blue	Heating or alt Cooling	1680	1630	1580	1535	1485	1435	1380	1330	1275	1225
	Red [3]	Alt Cooling or alt Heating	1500	1445	1390	1340	1285	1225	1170	1110	1055	1000
120E24--20	Gray [5, 6]	Cooling. Do not use for heating	2070	2020	1965	1910	1850	1790	1725	1660	1605	1550
	Blue	Heating or alt Cooling	1795	1735	1680	1620	1560	1495	1440	1375	1315	1255
	Yellow [3]	Alt Cooling or alt Heating	1465	1400	1340	1270	1210	1150	1090	1030	950	880
	Orange [3]	Alt Cooling. Do not use for heating	1295	1235	1165	1095	1030	970	905	825	760	700
	Red [3]	Alt Cooling. Do not use for heating	1095	1020	945	875	805	730	660	585	525	465

NOTE:

1. A filter is required for each return–air inlet. Airflow performance includes a 3/4–in. (19 mm) washable filter media such as contained in a factory–authorized filter rack. See accessory list in Product Data sheet. To determine airflow performance without this filter, assume an additional 0.1 in. w.c. available external static pressure.
2. **ADJUST THE BLOWER SPEED TAPS AS NECESSARY FOR THE PROPER AIR TEMPERATURE RISE FOR EACH INSTALLATION.**
3. The "Function" column identifies which speed taps can be used for heating. Shaded areas indicate that this airflow range is **BELOW THE RANGE ALLOWED FOR HEATING OPERATION. THESE AIRFLOW RANGES MAY ONLY BE USED FOR COOLING.**
4. If the same motor speed tap is needed for heating and cooling, a Jumper Wire accessory kit is available, see Product Data sheet for the current Jumper Wire accessory part number. Reference the "Start–up, Adjustments, and Safety Check" section for further Jumper Wire instructions.
5. Airflows over 1800 CFM require bottom return, two–side return, or bottom and side return. A minimum filter size of 20" x 25" (508 x 635 mm) is required.
6. For upflow applications, air entering from one side into both the side of the furnace and a return air base counts as a side and bottom return.
7. The "–" entry indicates an unstable operating condition.

MAXIMUM ALLOWABLE EXPOSED VENT LENGTHS INSULATION TABLE

Table 1 – Maximum Allowable Exposed Vent Lengths Insulation Table - Ft.

Winter Design Temp ° F	Unit Size	40,000* BTUH									60,000 BTUH											
		Uninsulated			3/8-in. Insulation			1/2-in. Insulation			Uninsulated				3/8-in. Insulation				1/2-in. Insulation			
	Pipe Dia. in.	1 ½	2	2 ½	1 ½	2	2 ½	1 ½	2	2 ½	1 ½	2	2 ½	3	1 ½	2	2 ½	3	1 ½	2	2 ½	3
	20	20	20	20	20	50	45	20	60	50	20	30	30	25	20	75	65	60	20	85	75	65
	0	10	5	5	20	25	20	20	30	25	15	15	10	10	20	40	30	25	20	45	40	30
	-20	5			20	15	10	20	20	15	10	5			20	25	20	15	20	30	25	20
	-40				15	10	5	15	15	10	5				20	15	15	10	20	20	15	10

Winter Design Temp ° F	Unit Size	80,000 BTUH														
		Uninsulated					3/8-in. Insulation					1/2-in. Insulation				
	Pipe Dia. in.	1 ½	2	2 ½	3	4	1 ½	2	2 ½	3	4	1 ½	2	2 ½	3	4
	20	15	40	40	35	30	15	50	90	75	65	15	50	70	70	70
	0	15	20	15	10	5	15	50	45	35	30	15	50	50	40	35
	-20	15	10	5			15	35	30	20	15	15	40	30	25	15
	-40	10	5				15	25	20	15	5	15	30	25	20	10

Winter Design Temp ° F	Unit Size	100,000 BTUH											
		Uninsulated				3/8-in. Insulation				1/2-in. Insulation			
	Pipe Dia. in.	2	2 ½	3	4	2	2 ½	3	4	2	2 ½	3	4
	20	20	50	40	35	20	80	95	80	20	80	105	90
	0	20	20	15	10	20	55	45	35	20	65	55	45
	-20	15	10	5		20	35	30	20	20	45	35	25
	-40	10	5			20	25	20	10	20	30	25	15

Winter Design Temp ° F	Unit Size	120,000 BTUH									140,000 BTUH								
		Uninsulated			3/8-in. Insulation			1/2-in. Insulation			Uninsulated			3/8-in. Insulation			1/2-in. Insulation		
	Pipe Dia. in.	2 ½	3	4	2 ½	3	4	2 ½	3	4	2 ½	3	4	2 ½	3	4	2 ½	3	4
	20	10	50	40	10	75	95	10	75	105	5	55	50	5	65	105	5	65	125
	0	10	20	15	10	55	45	10	65	50	5	25	15	5	65	50	5	65	60
	–20	10	10		10	35	25	10	45	30	5	10	5	5	45	30	5	50	40
	–40	10	5		10	25	15	10	30	20	5	5		5	30	20	5	35	25

Maximum Allowable Exposed Vent Length in Unconditioned Space (Metric)

Winter Design Temp ° C	Unit Size	40,000* BTUH									60,000 BTUH											
		Uninsulated			3/8-in. Insulation			1/2-in. Insulation			Uninsulated				3/8-in. Insulation				1/2-in. Insulation			
	Pipe Dia. mm	38	51	64	38	51	64	38	51	64	38	51	64	76	38	51	64	76	38	51	64	76
	–7	6.1	6.1	6.1	6.1	15.2	13.7	6.1	18.3	15.2	6.1	9.1	9.1	7.6	6.1	22.9	19.8	18.3	6.1	25.9	22.9	19.8
	–18	3.0	1.5	1.5	6.1	7.6	6.1	6.1	9.1	7.6	4.6	4.6	3.0	3.0	6.1	12.2	9.1	7.6	6.1	13.7	12.2	9.1
	–29	1.5			6.1	4.6	3.0	6.1	6.1	4.6	3.0	1.5			6.1	7.6	6.1	4.6	6.1	9.1	7.6	6.1
	–40				4.6	3.0	1.5	4.6	4.6	3.0	1.5				6.1	4.6	4.6	3.0	6.1	6.1	4.6	3.0

Winter Design Temp ° C	Unit Size	80,000 BTUH														
		Uninsulated					3/8-in. Insulation					1/2-in. Insulation				
	Pipe Dia. mm	38	51	64	76	102	38	51	64	76	102	38	51	64	76	102
	–7	4.6	12.2	12.2	10.7	9.1	4.6	15.2	27.4	22.9	19.8	4.6	15.2	21.3	21.3	21.3
	–18	4.6	6.1	4.6	3.0	1.5	4.6	15.2	13.7	10.7	9.1	4.6	15.2	15.2	12.2	10.7
	–29	4.6	3.0	1.5			4.6	10.7	9.1	6.1	4.6	4.6	12.2	9.1	7.6	4.6
	–40	3.0	1.5				4.6	7.6	6.1	4.6	1.5	4.6	9.1	7.6	6.1	3.0

Winter Design Temp ° C	Unit Size	100,000 BTUH											
		Uninsulated				3/8-in. Insulation				1/2-in. Insulation			
	Pipe Dia. mm	51	64	76	102	51	64	76	102	51	64	76	102
	–7	6.1	15.2	12.2	10.7	6.1	24.4	28.9	24.4	6.1	24.4	32.0	27.4
	–18	6.1	6.1	4.6	3.0	6.1	16.8	13.7	10.7	6.1	19.8	16.7	13.7
	–29	4.6	3.0	1.5		6.1	10.7	9.1	6.1	6.1	13.7	10.7	7.6
	–40	3.0	1.5			6.1	7.6	6.1	3.0	6.1	9.1	7.6	4.6

Winter Design Temp ° C	Unit Size	120,000 BTUH									140,000 BTUH*								
		Uninsulated			3/8-in. Insulation			1/2-in. Insulation			Uninsulated			3/8-in. Insulation			1/2-in. Insulation		
	Pipe Dia. mm	64	76	102	64	76	102	64	76	102	64	76	102	64	76	102	64	76	102
	–7	3.0	15.2	12.2	3.0	22.9	28.9	3.0	22.9	32.0	1.5	16.7	15.2	1.5	19.8	32.0	1.5	19.8	38.1
	–18	3.0	6.1	4.6	3.0	16.8	13.7	3.0	19.8	15.2	1.5	7.6	4.6	1.5	19.8	15.2	1.5	19.8	18.3
	–29	3.0	3.0		3.0	10.7	7.6	3.0	13.7	9.1	1.5	3.0	1.5	1.5	13.7	9.1	1.5	15.2	12.2
	-40	3.0	1.5		3.0	7.6	4.6	3.0	9.1	6.1	1.5	1.5		1.5	9.1	6.1	1.5	35	7.6

* Not all model families have these sizes

MAXIMUM EQUIVALENT VENT LENGTHS

Table 2 – Maximum Equivalent Vent Length

NOTE: Maximum Equivalent Vent Length (MEVL) includes standard and concentric vent termination and does NOT include elbows. Use Table 3 - Deductions from Maximum Equivalent Vent Length to determine allowable vent length for each application.

Single Stage 92% – Ft.																				
Unit Size		40,000 [1]			60,000 [2]				80,000					100,000 [3]				120,000 [3]		
Altitude (feet)	Pipe Dia. (in)	1 ½	2	2 ½	1 ½	2	2 ½	3	1 ½	2	2 ½	3	4	2	2 ½	3	4	2 ½	3	4
	0–2000	20	85	185	20	100	175	200	15	55	130	175	200	20	80	175	200	10	75	185
	2001–3000	15	80	175		95	165	185	10	49	125	165	185	15	75	165	185		70	175
	3001–4000		70	160	16	90	155	175			115	155	175			155	175	5	65	165
	4001–4500	10		155	15	85	150	170		44	110	150	165	10	70		170	N/A	60	160
	4501–5000			145		80		165				145	160		65	150	165			
	5001–6000		60	130		75	140	155		41	100	135	150			140	155			155
	6001–7000	5	55	120	13	70	130	145	N/A	38	90	125	140		60	135	145		50	140
	7001–8000		50	110	10	65	120	135		36		120	125	N/A	55	125	135		46	130
	8001–9000	N/A	30	95	5	60	115	125		33	80	110	115		50	115	125		43	120
	9001–10000		25	85	N/A	55	105	115		30	75	100	105		45	100	115		39	115
Single Stage 92% – Meters																				
Unit Size		40,000 [1]			60,000 [2]				80,000					100,000 [3]				120,000 [3]		
Altitude (meters)	Pipe Dia. (mm)	38	51	64	38	5	64	76	38	51	64	76	102	51	64	76	102	64	76	102
	0–610	6.0	25.9	56.3	6.0	30.4	53.3	60.9	4.5	16.7	39.6	53.3	60.9	6.0	24.3	53.3	60.9	3.0	22.8	56.3
	611–914	4.5	24.3	53.3		28.9	50.2	56.3	3.0	14.9	38.1	50.2	56.3	4.5	22.8	50.2	56.3		21.3	53.3
	915–1219		21.3	48.7	4.8	27.4	47.2	53.3			35.0	47.2	53.3		0.0	47.2	53.3	1.5	19.8	50.2
	1220–1370	3.0		47.2	4.5	25.9	45.7	51.8		13.4	33.5	45.7	50.2	3.0	21.3		51.8	N/A	18.2	48.7
	1371–1524			44.1		24.3		50.2			0.0	44.1	48.7		19.8	45.7	50.2			
	1525–1829		18.2	39.6		22.8	42.6	47.2		12.4	30.4	41.1	45.7		0.0	42.6	47.2			47.2
	1830–2134	1.5	16.7	36.5	3.9	21.3	39.6	44.1	N/A	11.5	27.4	.1	42.6		18.2	41.1	44.1		15.2	42.6
	2135–2438		15.2	33.5	3.0	19.8	36.5	41.1		10.9	0.0	36.5	38.1	N/A	16.7	38.1	41.1		14.0	39.6
	2439–2743	N/A	9.1	28.9	1.5	18.2	35.0	38.1		10.0	24.3	33.5	35.0		15.2	35.0	38.1		13.1	36.5
	2744–3048		7.6	25.9	N/A	16.7	32.0	35.0		9.1	22.8	30.4	32.0		13.7	30.4	35.0		11.8	35.0

NOTES:

1. Inducer Outlet Restrictor disk (P/N 337683–401; 1.25–in. (32 mm) Dia.) shipped in the loose parts bag or available through Replacement Components required under 10–ft. (3 M) TEVL in all orientations. Required for installations from 0 – 2000 (0 to 610 M) above sea level. Failure to use an outlet restrictor may result in flame disturbances or flame sense lock–out.
2. Inducer Outlet Restrictor disk (P/N 337683–401; 1.25–in. (32 mm) Dia.) available through Replacement Components required for less than 5–ft. (1.5 M) TEVL in downflow and horizontal orientations only. Required for installations from 0 – 2000 (0 to 610 M) above sea level.
3. Inducer Outlet Restrictor disk (P/N 337683–402; 1.50–in. (38 mm) Dia.) available through Replacement Components required for less than 5–ft. (1.5 M) TEVL in downflow and horizontal orientations only. Required for installations from 0 – 2000 (0 to 610 M) above sea level.

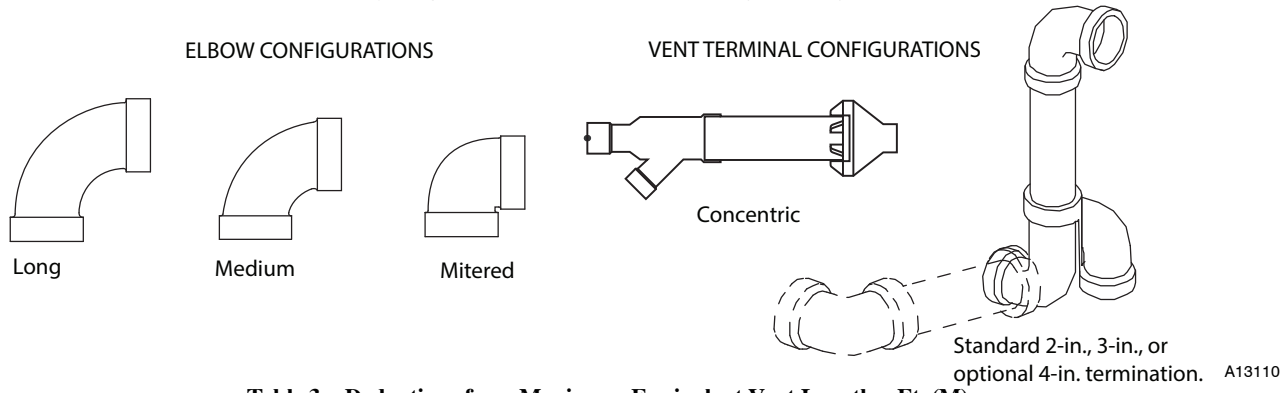

Table 3 – Deductions from Maximum Equivalent Vent Length - Ft. (M)

Pipe Diameter (in):	1-1/2		2		2-1/2		3		4	
Mitered 90º Elbow	8	(2.4)	8	(2.4)	8	(2.4)	8	(2.4)	8	(2.4)
Medium Radius 90º Elbow	5	(1.5)	5	(1.5)	5	(1.5)	5	(1.5)	5	(1.5)
Long Radius 90º Elbow	3	(0.9)	3	(0.9)	3	(0.9)	3	(0.9)	3	(0.9)
Mitered 45º Elbow	4	(1.2)	4	(1.2)	4	(1.2)	4	(1.2)	4	(1.2)
Medium Radius 45º Elbow	2.5	(0.8)	2.5	(0.8)	2.5	(0.8)	2.5	(0.8)	2.5	(0.8)
Long Radius 45º Elbow	1.5	(0.5)	1.5	(0.5)	1.5	(0.5)	1.5	(0.5)	1.5	(0.5)
Tee	16	(4.9)	16	(4.9)	16	(4.9)	16	(4.9)	16	(4.9)

NOTES:

1. Use only the smallest diameter pipe possible for venting. Over–sizing may cause flame disturbance or excessive vent terminal icing or freeze–up.
2. NA – Not allowed. Pressure switch will not close, or flame disturbance may result.
3. Vent sizing for Canadian installations over 4500 ft. (1370 M) above sea level are subject to acceptance by the local authorities having jurisdiction.
4. Size both the combustion air and vent pipe independently, then use the larger size for both pipes.
5. Assume the two 45° elbows equal one 90° elbow. Wide radius elbows are desirable and may be required in some cases.
6. Elbow and pipe sections within the furnace casing and at the vent termination should not be included in vent length or elbow count.
7. The minimum pipe length is 5 ft. (2 M) linear feet (meters) for all applications.
8. Use 3–in. (76 mm) diameter vent termination kit for installations requiring 4–in. (102 mm) diameter pipe.

Venting System Length Calculations

The Total Equivalent Vent Length (TEVL) for **EACH** combustion air or vent pipe equals the length of the venting system, plus the equivalent length of elbows used in the venting system from Table 3.

Standard vent terminations or factory accessory concentric vent terminations count for zero deduction.

See vent system manufacturer's data for equivalent lengths of flexible vent pipe or other termination systems. **DO NOT ASSUME** that one foot of flexible vent pipe equals one foot of straight PVC/ABS DWV vent pipe.

Compare the Total Equivalent Vent Length to the Maximum Equivalent Vent Lengths in Table 2.

Example 1

A direct-vent 60,000 BTUH furnace installed at 2100 ft. (640M). Venting system includes **FOR EACH PIPE:**
70 feet (22 M) of vent pipe, 65 feet (20 M) of combustion air inlet pipe, (3) 90º long-radius elbows, (2) 45º long-radius elbows, and a factory accessory concentric vent kit.

Can this application use 2" (50 mm ND) PVC/ABS DWV vent piping?

Measure the required linear length of air inlet and vent pipe; insert the longest of the two here					70 ft. (22 M)	Use length of the longer of the vent or air inlet piping system
Add equiv length of (3) 90º long-radius elbows (use the highest number of elbows for either the vent or inlet pipe)	3	x	3 ft. (0.9 M)	=	9 ft. (2.7 M)	From Table 3
Add equiv length of (2) 45º long-radius elbows (use the highest number of elbows for either the vent or inlet pipe)	2	x	1.5 ft. (0.5 M)	=	3 ft. (0.9 M)	From Table 3
Add equiv length of factory concentric vent term					0 ft.	From Table 3
Add correction for flexible vent pipe, if any					0 ft.	From Vent Manufacturer's instructions; zero for PVC/ABS DWV
Total Equivalent Vent Length (TEVL)					82 ft. (25 M)	Add all of the above lines
Maximum Equivalent Vent Length (MEVL)					95 ft. (29 M)	For 2" pipe from Table 2
Is TEVL less than MEVL?					**YES**	**Therefore, 2" pipe MAY be used**

Example 2

A direct-vent 60,000 BTUH furnace installed at 2100 ft. (640M). Venting system includes **FOR EACH PIPE:**
100 feet (30 M) of vent pipe, 95 feet (29 M) of combustion air inlet pipe, (3) 90º long-radius elbows, and a polypropylene concentric vent kit. Also includes 20 feet (6.1 M) of flexible polypropylene vent pipe, included within the 100 feet (30 M) of vent pipe.

VERIFY FROM POLYPROPYLENE VENT MANUFACTURER'S INSTRUCTIONS for the multiplier correction for flexible vent pipe.

Can this application use 60mm o.d. (2") polypropylene vent piping? If not, what size piping can be used?

Measure the required linear length of **RIGID** air inlet and vent pipe; insert the longest of the two here: 100 ft. Of rigid pipe – 20 ft. Of flexible pipe				=	80 ft. (24 M)	Use length of the longer of the vent or air inlet piping system
Add equiv length of (3) 90º long-radius elbows (use the highest number of elbows for either the vent or inlet pipe)	3	x	5 ft. (1.5 M)	=	15 ft. (4.6 M)	Example from polypropylene vent manufacturer's instructions, Verify from vent manufacturer's instructions.
Add equiv length of 45º long-radius elbows (use the highest number of elbows for either the vent or inlet pipe)	0	x		=	0 ft. (0 M)	
Add equiv length of factory concentric vent term	9	x	3.3 ft (0.9 M)	=	30 ft. (9 M)	
Add correction for flexible vent pipe, if any	2*	x	20 ft. (6.1 M)	=	40 ft. (12.2 M)	
* VERIFY FROM VENT MANUFACTURER'S INSTRUCTIONS; For example only, assume 1 meter of flexible 60mm (2") or 80mm (3") polypropylene pipe equals 2.0 meters (6.5 ft.) of PVC/ABS pipe.						
Total Equivalent Vent Length (TEVL)					165 ft. (50 M)	Add all of the above lines
Maximum Equivalent Vent Length (MEVL)					95 ft. (29 M)	For 2" pipe from Table 2
Is TEVL less than MEVL?					**NO**	**Therefore, 60mm (2") pipe may NOT be used; try 80mm (3")**
Maximum Equivalent Vent Length (MEVL)					185 ft. (57 M)	For 3" pipe from Table 2
Is TEVL less than MEVL?					**YES**	**Therefore, 80mm (3") pipe MAY be used**

RETURN AIR TEMPERATURE

This furnace is designed for continuous return-air minimum temperature of 60°F (15°C) db or intermittent operation down to 55°F (13°C) db such as when used with a night setback thermometer. Return-air temperature must not exceed 80°F (27°C) db. Failure to follow these return air limits may affect reliability of heat exchangers, motors and controls.

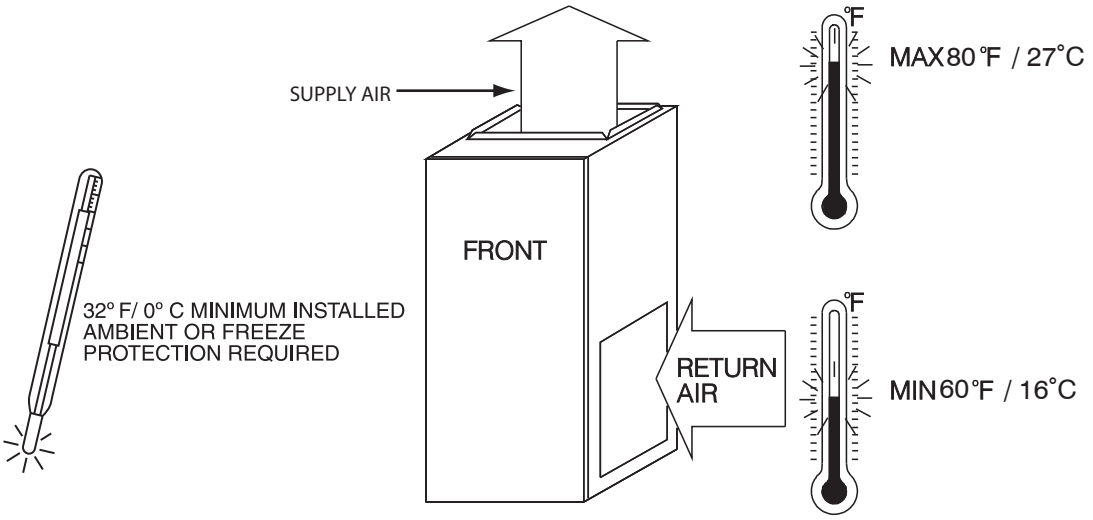

A10490

MINIMUM CLEARANCES TO COMBUSTIBLE MATERIALS

POSITION	CLEARANCE
Rear	0 (0 mm)
Front (Combustion air openings in furnace and in structure)	1 in. (25 mm)
Required for service**	24 in. (610 mm)*
All Sides of Supply Plenum**	1 in. (25 mm)
Sides	0 (0 mm)
Vent	0 (0 mm)
Top of Furnace	1 in. (25 mm)

* Recommended

**Consult your local building codes

COMBUSTION-AIR PIPE FOR NON-DIRECT (1-PIPE) VENT APPLICATION

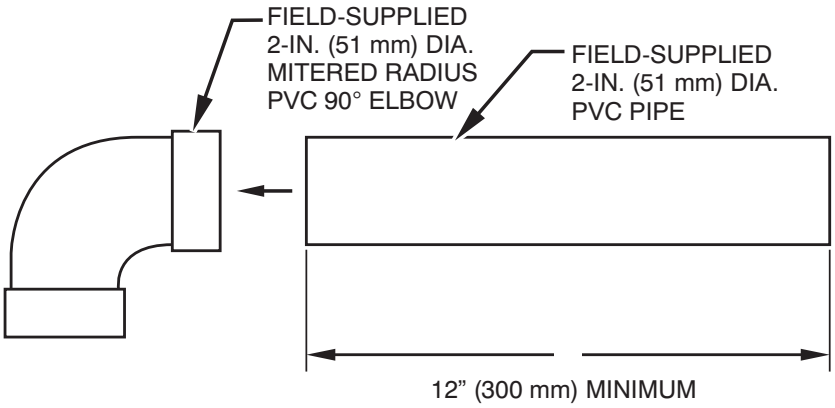

a

A12376

NOTE: See Installation Instructions for specific venting configurations.

DOWNFLOW SUBBASE

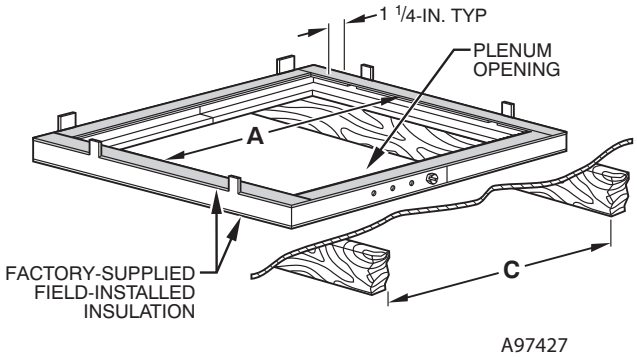

Assembled

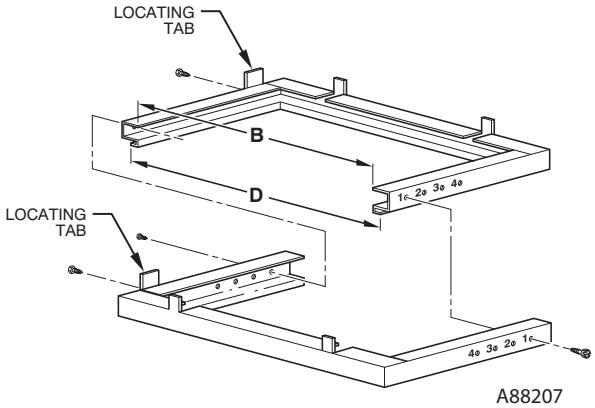

Disassembled

DIMENSIONS (IN. / MM)						
FURNACE CASING WIDTH	FURNACE IN DOWNFLOW APPLICATION	PLENUM OPENING*		FLOOR OPENING		HOLE NO. FOR WIDTH ADJUSTMENT
		A	B	C	D	
14–3/16 (360)	Furnace with or without Cased Coil Assembly or Coil Box	11–3/16 (322)	19 (483)	13–7/16 (341)	20–5/8 (600)	4
17–1/2 (445)	Furnace with or without Cased Coil Assembly or Coil Box	15–1/8 (384)	19 (483)	16–3/4 (426)	20–5/8 (600)	3
21 (533)	Furnace with or without Cased Coil Assembly or Coil Box	18–5/8 (396)	19 (483)	20–1/4 (514)	20–5/8 (600)	2
24–1/2 (622)	Furnace with or without Cased Coil Assembly or Coil Box	22–1/8 (562)	19 (483)	23–3/4 (603)	20–5/8 (600)	1

*The plenum should be constructed 1/4–in. (6 mm) smaller in width and depth than the plenum dimensions shown above.

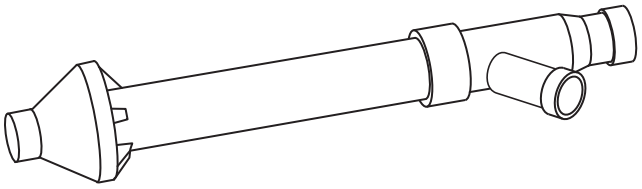

Concentric Vent Kit

A93086

A concentric vent kit allows vent and combustion-air pipes to terminate through a single exit in a roof or side wall. One pipe runs inside the other allowing venting through the inner pipe and combustion air to be drawn in through the outer pipe.

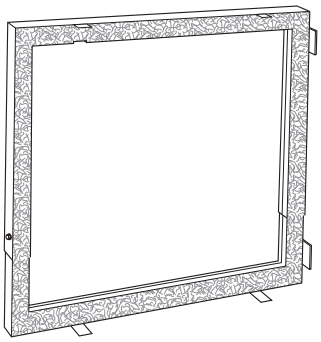

Downflow Subbase

A88202

One base fits all furnace sizes. The base is designed to be installed between the furnace and a combustible floor when no coil box is used or when a coil box other than a Carrier cased coil is used. It is CSA design certified for use with Carrier branded furnaces when installed in downflow applications.

ACCESSORY MEDIA FILTER CABINET

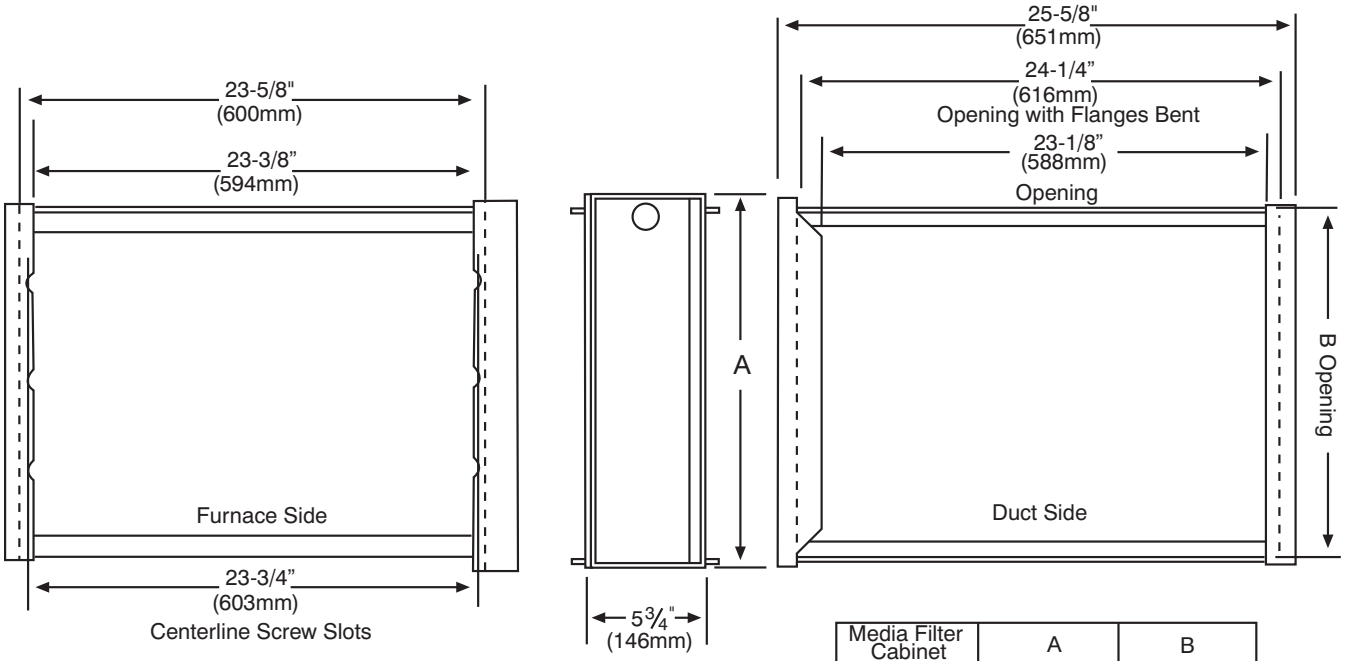

Media Filter Cabinet	A	B
16" (406mm)	17" (432mm)	16" (406mm)
20" (508mm)	21" (533mm)	20" (508mm)
24" (610mm)	25" (635mm)	24" (610mm)

NOTE: Media cabinet is matched to the bottom opening on furnace. May also be used for side return.

A12428

TYPICAL WIRING SCHEMATIC

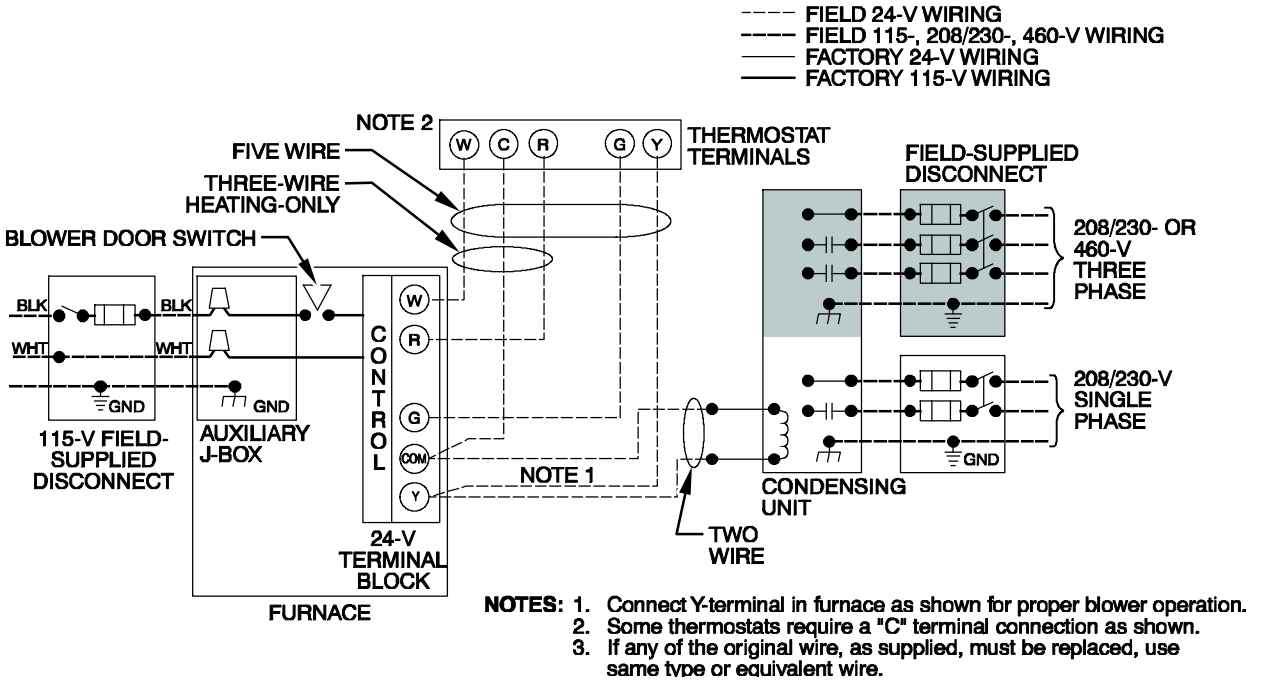

NOTES: 1. Connect Y-terminal in furnace as shown for proper blower operation.
2. Some thermostats require a "C" terminal connection as shown.
3. If any of the original wire, as supplied, must be replaced, use same type or equivalent wire.

A190079

DIMENSIONAL DRAWING

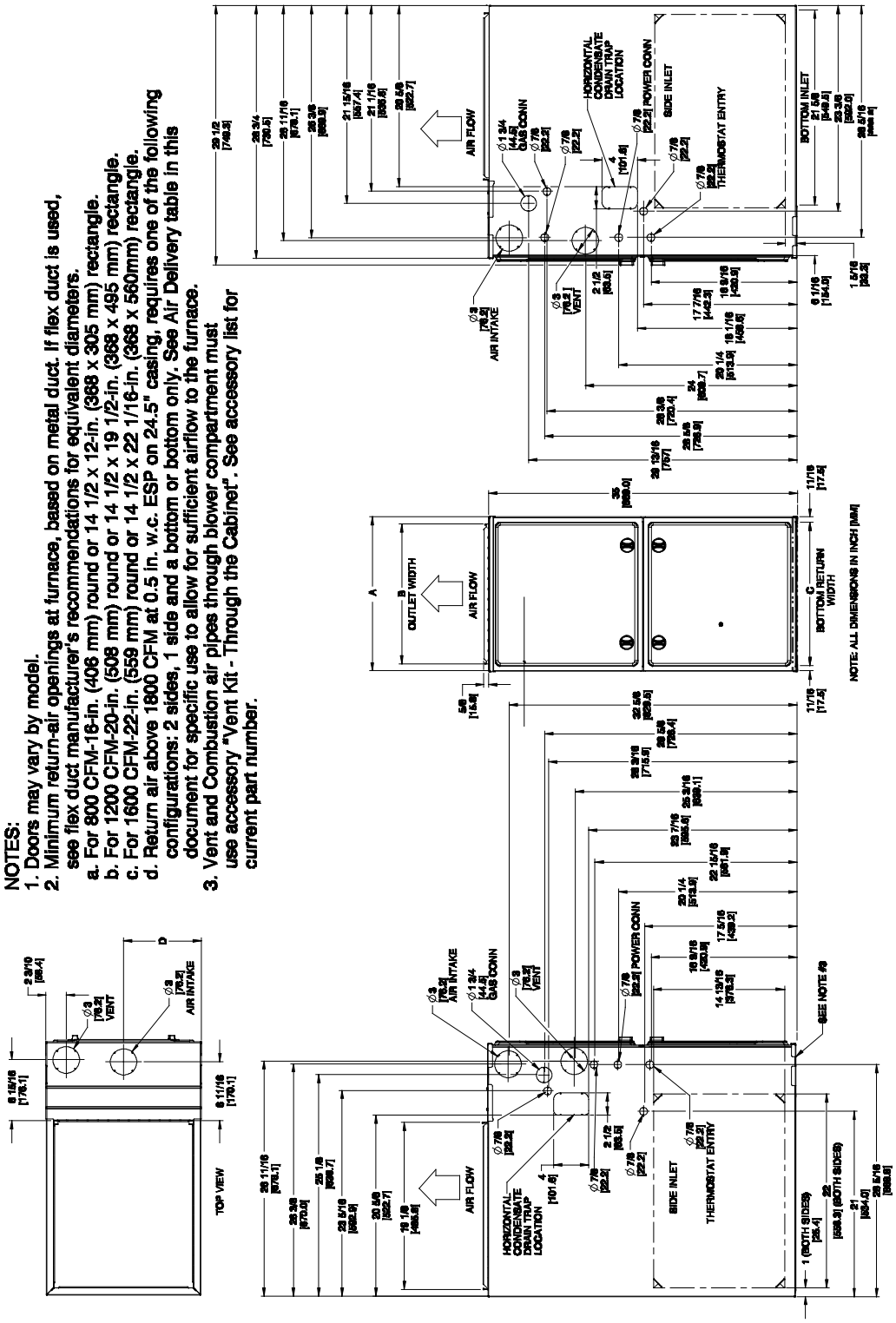

A180203

FURNACE SIZE	A	B	C	D	SHIP WT. LB (KG)
	CABINET WIDTH	OUTLET WIDTH	BOTTOM INLET WIDTH	AIR INTAKE	
040E14--10	14–3/16 (361)	12–1/2 (319)	12–9/16 (322)	7–1/8 (181)	112.0 (50.8)
040E17--12	17–1/2 (445)	15–7/8 (403)	16 (406)	8–3/4 (222)	122.5 (55.6)
060E14--12	14–3/16 (361)	12–1/2 (319)	12–9/16 (322)	7–1/8 (181)	122.0 (55.3)
060E17--14	17–1/2 (445)	15–7/8 (403)	16 (406)	8–3/4 (222)	132.0 (59.9)
080E17--16	17–1/2 (445)	15–7/8 (403)	16 (406)	8–3/4 (222)	142.0 (64.4)
080E21--20	21 (533)	19–3/8 (492)	19–1/2 (495)	10–1/2 (267)	150.0 (68.0)
100E21--20	21 (533)	19–3/8 (492)	19–1/2 (495)	10–1/2 (267)	160.0 (72.6)
100E21--22	21 (533)	19–3/8 (492)	19–1/2 (495)	10–1/2 (267)	162.5 (73.7)
120E24--20	24–1/2 (622)	22–7/8 (581)	23 (584)	12–1/4 (311)	183.0 (83.0)

RETURN AIR CONNECTIONS

NOTE: Refer to installation instructions for further details.

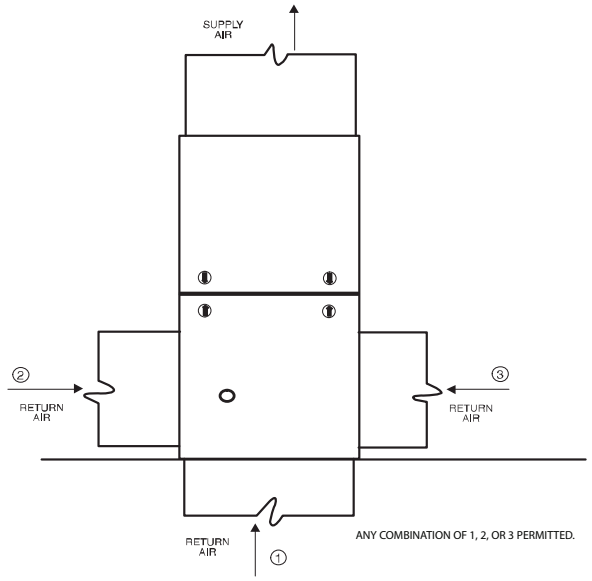

Fig. 1 - Upflow Return Air Configurations and Restrictions

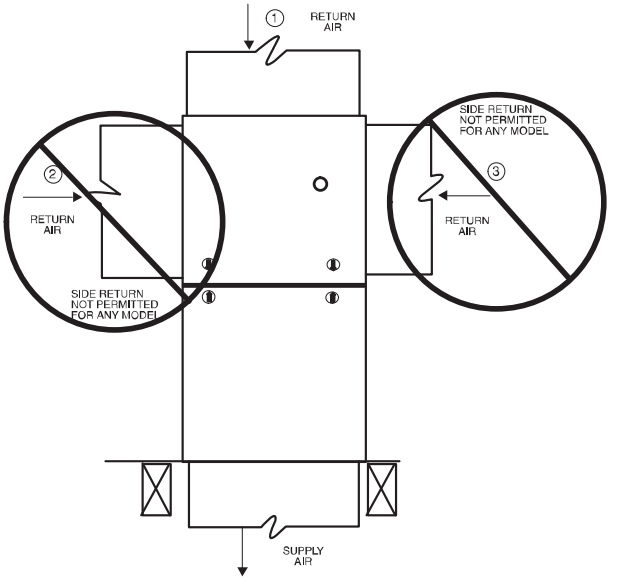

Fig. 2 - Downflow Return Air Configurations and Restrictions

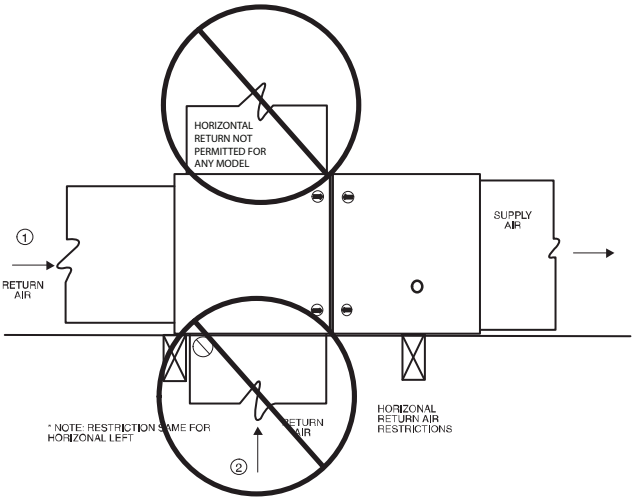

Fig. 3 - Horizontal Return Air Configurations and Restrictions

GUIDE SPECIFICATIONS

General

System Description

Furnish a _____ 4-way multipoise gas-fired condensing furnace for use with natural gas or propane (factory-authorized conversion kit required for propane).

Quality Assurance

Unit will be designed, tested and constructed to the current ANSI Z 21.47/CSA 2.3 design standard for gas-fired central furnaces.

Unit will be third party certified by CSA to the current ANSI Z 21.47/CSA 2.3 design standard for gas-fired central furnaces. Unit will carry the CSA Blue Star® and Blue Flame® labels. Unit efficiency testing will be performed per the current DOE test procedure as listed in the Federal Register.

Unit will be certified for capacity and efficiency and listed in the latest AHRI Consumer's Directory of Certified Efficiency Ratings.

Unit will carry the current Federal Trade Commission Energy Guide efficiency label.

Delivery, Storage, and Handling

Unit will be shipped as single package only and is stored and handled per unit manufacturer's recommendations.

Warranty (for inclusion by specifying engineer)

U.S. and Canada only. Warranty certificate available upon request.

Equipment

Blower Wheel and FCT-ECM Blower Motor

Galvanized blower wheel shall be centrifugal type, statically and dynamically balanced. Blower motor of fixed-speeds, constant torque (FCT) ECM type shall be permanently lubricated with sealed ball bearings, of _____hp, and have multiple speeds from 600-1200 RPM operating only when 24-VAC motor inputs are provided. Blower motor shall be direct drive and soft mounted to the blower housing to reduce vibration transmission.

Filters

Furnace shall have reusable-type filters. Filter shall be _____ in. (mm) X _____ in. (mm). An accessory highly efficient Media Filter is available as an option. _____ Media Filter.

Casing

Casing shall be of .030 in. thickness minimum, pre-painted steel.

Draft Inducer Motor

Draft inducer motor shall be single-speed PSC design.

Primary Heat Exchangers

Primary heat exchangers shall be 3-Pass corrosion-resistant aluminized steel of fold-and-crimp sectional design and applied operating under negative pressure.

Secondary Heat Exchangers

Secondary heat exchangers shall be of a stainless steel flow-through of fin-and-tube design and applied operating under negative pressure.

Controls

Controls shall include a micro-processor-based integrated electronic control board with at least 16 service troubleshooting codes displayed via diagnostic flashing LED light on the control, a self-test feature that checks all major functions of the furnace, and a replaceable automotive-type circuit protection fuse. Multiple operational settings available, including blower speeds for high heat, low cooling, high cooling.

Operating Characteristics

Heating capacity shall be _____ Btuh input; _____ Btuh output capacity.

Fuel Gas Efficiency shall be _____AFUE.

Air delivery shall be _____ cfm minimum at 0.50 in. W.C. external static pressure.

Dimensions shall be: depth_____in. (mm); width _____in. (mm); height_____in. (mm) (casing only). Height shall be_____in. (mm) with A/C coil and _____in. (mm) overall with plenum.

Electrical Requirements

Electrical supply shall be 115 volts, 60 Hz, single-phase (nominal). Minimum wire size shall be _____AWG; maximum fuse size of HACR-type designated circuit breaker shall be _____ amps.

Special Features

Refer to section of the product data identifying accessories and descriptions for specific features and available enhancements.

Copyright 2020 Carrier Corp. • 7310 W. Morris St. • Indianapolis, IN 46231
. Edition Date: 01/2020

Catalog No: 59SC2D–04PD

Manufacturer reserves the right to change, at any time, specifications and designs without notice and without obligations.

Replaces: 59SC2D–03PD