619P(A,E)Q*B
HIGH WALL DUCTLESS SPLIT SYSTEM
SIZES 09 TO 36

bryant®

Installation Instructions

NOTE: Read the entire instruction manual before starting the installation.

TABLE OF CONTENTS

	PAGE
SAFETY CONSIDERATIONS	2
PARTS LIST	3
SYSTEM REQUIREMENTS	4
DIMENSIONS - INDOOR	5
CLEARANCES - INDOOR	5
INSTALLATION TIPS	6
INDOOR UNIT INSTALLATION	6
ELECTRICAL DATA	7
CONNECTION DIAGRAMS	7
INSTALL ALL POWER, INTERCONNECTING WIRING, AND PIPING TO INDOOR UNIT	7
WIRELESS REMOTE CONTROL INSTALLATION	8
START-UP	9
TROUBLESHOOTING	10

SAFETY CONSIDERATIONS

Installing, starting up, and servicing air-conditioning equipment can be hazardous due to system pressures, electrical components, and equipment location (roofs, elevated structures, etc.).

Only trained, qualified installers and service mechanics should install, start-up, and service this equipment.

Untrained personnel can perform basic maintenance functions such as cleaning coils. All other operations should be performed by trained service personnel.

When working on the equipment, observe precautions in the literature and on tags, stickers, and labels attached to the equipment.

Follow all safety codes. Wear safety glasses and work gloves. Keep quenching cloth and fire extinguisher nearby when brazing. Use care in handling, rigging, and setting bulky equipment.

Read these instructions thoroughly and follow all warnings or cautions included in literature and attached to the unit. Consult local building codes and National Electrical Code (NEC) for special requirements. Recognize safety information. This is the safety-alert symbol ⚠. When you see this symbol on the unit and in instructions or manuals, be alert to the potential for personal injury. Understand these signal words: DANGER, WARNING, and CAUTION. These words are used with the safety-alert symbol. DANGER identifies the most serious hazards which **will** result in severe personal injury or death. WARNING signifies hazards which **could** result in personal injury or death. CAUTION is used to identify unsafe practices which **may** result in minor personal injury or product and property damage. NOTE is used to highlight suggestions which **will** result in enhanced installation, reliability, or operation.

⚠ WARNING

ELECTRICAL SHOCK HAZARD

Failure to follow this warning could result in personal injury or death.

Before installing, modifying, or servicing system, main electrical disconnect switch must be in the OFF position. There may be more than 1 disconnect switch. Lock out and tag switch with a suitable warning label.

⚠ WARNING

EXPLOSION HAZARD

Failure to follow this warning could result in death, serious personal injury, and/or property damage.

Never use air or gases containing oxygen for leak testing or operating refrigerant compressors. Pressurized mixtures of air or gases containing oxygen can lead to an explosion.

⚠ CAUTION

EQUIPMENT DAMAGE HAZARD

Failure to follow this caution may result in equipment damage or improper operation.

Do not bury more than 36 in. (914 mm) of refrigerant pipe in the ground. If any section of pipe is buried, there must be a 6 in. (152 mm) vertical rise to the valve connections on the outdoor units. If more than the recommended length is buried, refrigerant may migrate to the cooler buried section during extended periods of system shutdown. This causes refrigerant slugging and could possibly damage the compressor at start-up.

PARTS LIST

Part No.	Name of Part	Qty
1	Indoor Unit	1
2	Mounting Plate	1
3	Mounting Screw A ST3.9x25−C−H	5
4	Anchor	5
5	Air Filter	1
6	Remote Control	1
7	Remote Control Holder	1
8	Remote Control Mounting Screw B ST2.0x10−C−H	2

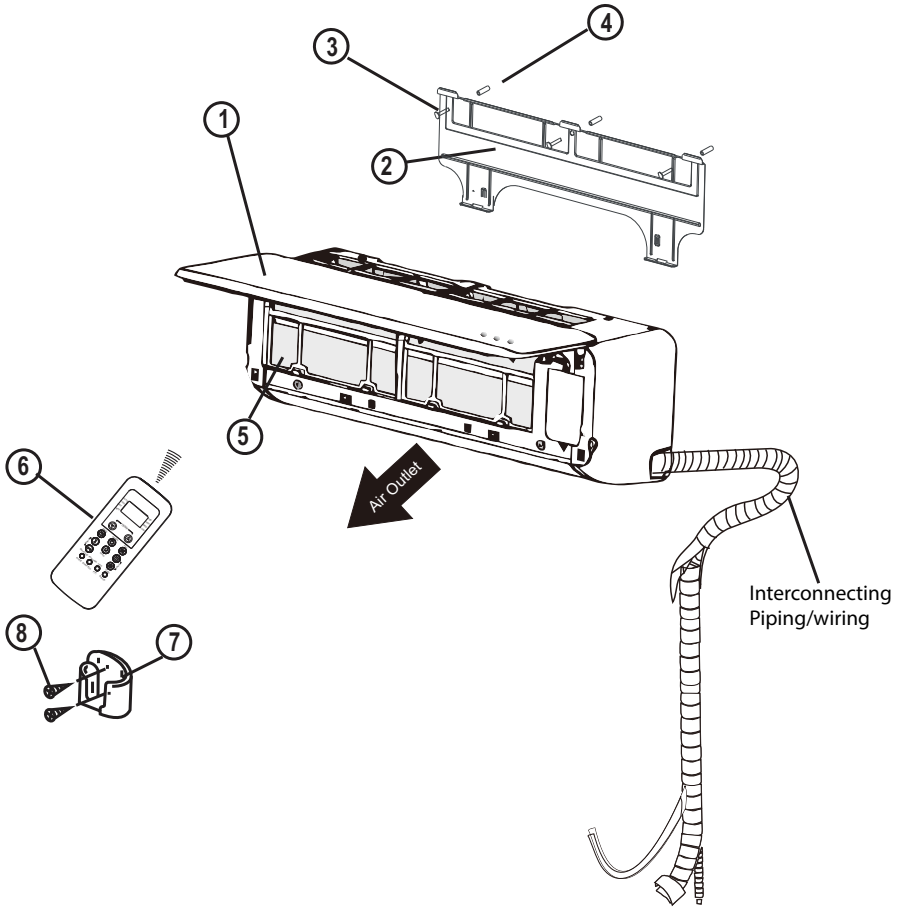

A150726

Fig. 1 − Parts List

Note:
- If the outdoor unit is higher than the indoor unit, prevent rain from flowing into the indoor unit along the connection pipe by making a downward arc in the connection pipe before it enters the wall to the indoor unit. This ensures that rain drips from the connection pipe before it enters the wall.
- Piping and the interconnecting wiring are field supplied.
- The illustration above is only a sketch. Different models may be slightly different.

The following units are covered in these installation instructions.

Table 1—Indoor Units

Description	kBTUh	V−Ph−Hz	Model No
High Wall	9	115−1−60	619PAQ009BBMA
	12	115−1−60	619PAQ012BBMA
	9	208/230−1−60	619PEQ009BBMA
	12	208/230−1−60	619PEQ012BBMA
	18	208/230−1−60	619PEQ018BBMA
	24	208/230−1−60	619PEQ024BBMA
	30	208/230−1−60	619PEQ030BBMA
	36	208/230−1−60	619PEQ036BBMA

SYSTEM REQUIREMENTS

Allow sufficient space for airflow and servicing unit. See Fig. 3 for minimum required distances between unit and walls or ceilings.

Piping

IMPORTANT: **Both refrigerant lines must be insulated separately.**

- Table 2 lists the pipe sizes for the indoor unit. Refer to the outdoor unit installation instructions for other allowed piping lengths and refrigerant information.

Table 2—Indoor Unit Pipe Sizes

UNIT SIZE		9K (115V)	12K (115V)	9K (208/230V)	12K (208/230V)	18K (208/230V)	24K (208/230V)	30K (208/230V)	36K (208/230V)
Gas Pipe	in	3/8	1/2	3/8	1/2	1/2	5/8	5/8	5/8
	(mm)	9.52	12.7	9.52	12.7	12.7	16	16	16
Liquid Pipe	in	1/4	1/4	1/4	1/4	1/4	3/8	3/8	3/8
	(mm)	6.35	6.35	6.35	6.35	6.35	9.52	9.52	9.52

Wiring

All wires must be sized per NEC (National Electrical Code) or CEC (Canadian Electrical Code) and local codes. Use the Electrical Data table MCA (minimum circuit amps) and MOCP (maximum over current protection) to correctly size the wires and the disconnect fuse or breakers respectively.

Per caution note, only stranded copper conductors with a 600 volt rating and double insulated copper wire must be used. The use of BX cable is not recommended.

Recommended Connection Method for Power and Communication Wiring - Power and Communication Wiring:

The main power is supplied to the outdoor unit. The field supplied 14/3 power/communication wiring from the outdoor unit to the indoor unit consists of four (4) wires and provides the power for the indoor unit. Two wires are high voltage AC power, one is communication wiring and the other is a ground wire.

Recommended Connection Method for Power and Communication Wiring (To minimize communication wiring interference) Power Wiring:

The main power is supplied to the outdoor unit. The field supplied power wiring from the outdoor unit to the indoor unit consists of three (3) wires and provides the power for the indoor unit. Two wires are high voltage AC power and one is a ground wire.

To minimize voltage drop, the factory recommended wire size is 14/2 stranded with a ground.

Communication Wiring:

A separate shielded stranded copper conductor only, with a 600 volt rating and double insulated copper wire, must be used as the communication wire from the outdoor unit to the indoor unit. Please use a separate shielded 16GA stranded control wire.

⚠ CAUTION

EQUIPMENT DAMAGE HAZARD

Failure to follow this caution may result in equipment damage or improper operation.

- Wires should be sized based on NEC and local codes.
- Use copper conductors only with a 600 volt rating and double insulated copper wire.

DIMENSIONS - INDOOR

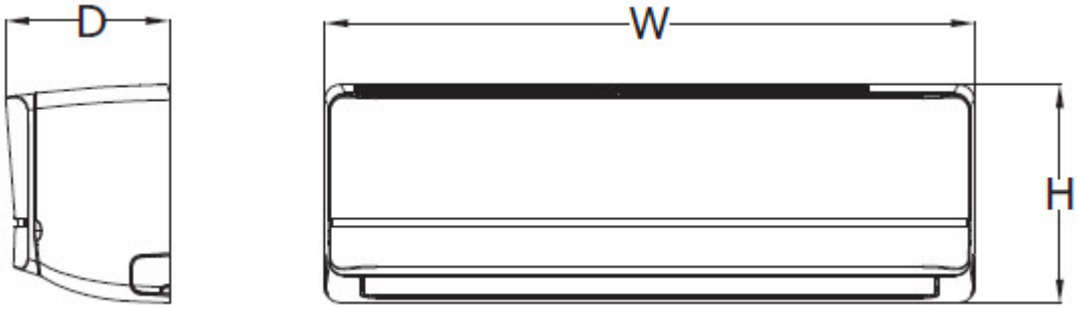

A150772

Fig. 2 – Indoor Unit Dimensions

Table 3—Indoor Unit Dimensions

HIGH WALL UNIT SIZE		9K	12K	9K	12K	18K	24K	30K	36K
Voltage		(115V)	(115V)	(208/230V)	(208/230V)	(208/230V)	(20/230V)	(208/230V)	(20/230V)
Height	In (mm)	11.02 (280)	11.02 (280)	11.02 (280)	11.02 (280)	12.40 (315)	13.39 (343)	13.39 (343)	13.39 (343)
Width	In (mm)	32.87 (835)	32.87 (835)	32.87 (835)	32.87 (835)	38.98 (990)	46.69 (1186)	46.69 (1186)	46.69 (1186)
Depth	In (mm)	7.80 (198)	7.80 (198)	7.80 (198)	7.80 (198)	8.58 (218)	10.16 (258)	10.16 (258)	10.16 (258)
Weight–Net	Lbs (kg)	19.18 (8.7)	19.18 (8.7)	19.18 (8.7)	19.18 (8.7)	24.46 (12.0)	40.12 (18.2)	40.12 (18.2)	40.12 (18.2)

CLEARANCES - INDOOR

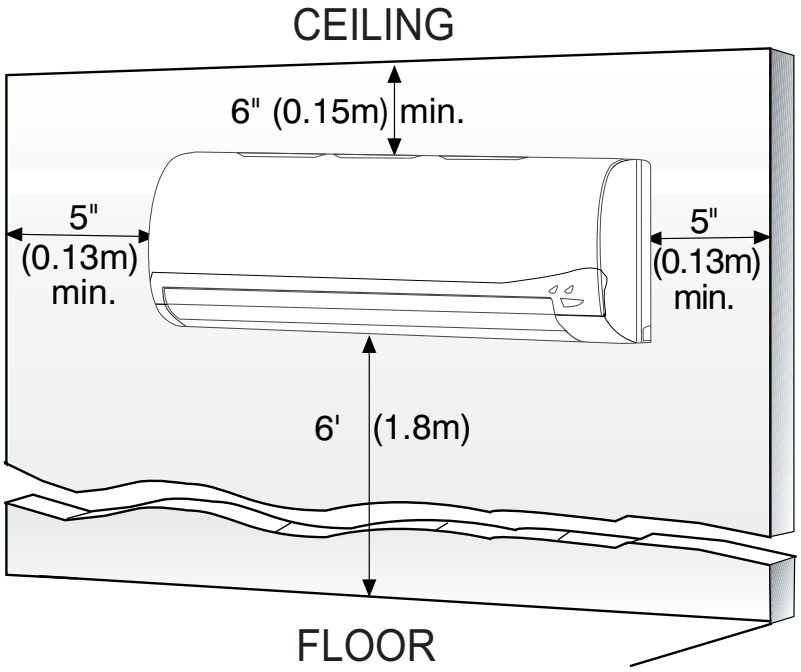

A07891

Fig. 3 – Indoor Unit Clearance

INSTALLATION TIPS

Ideal installation locations include:

Indoor Unit

- A location where there are no obstacles near inlet and outlet area.
- A location which can bear the weight of indoor unit.
- Do not install indoor units near a direct source of heat such as direct sunlight or a heating appliance.
- A location which provides appropriate clearances as outlined in Fig. 3.

INDOOR UNIT INSTALLATION

INSTALL MOUNTING PLATE

The mounting plate will look like one of the following figures depending on the model size.

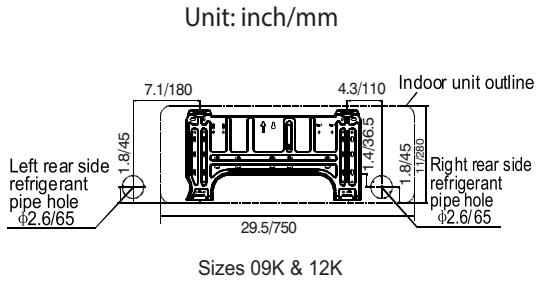

A150728

Fig. 4 – Mounting Plate - Model sizes 09, 12

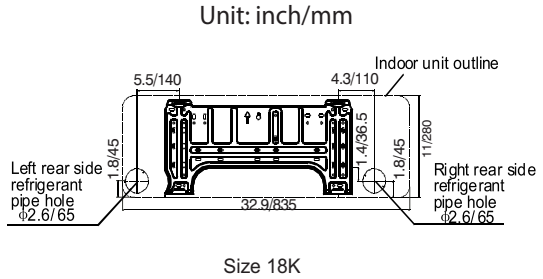

A150727

Fig. 5 – Mounting Plate - Model size 18

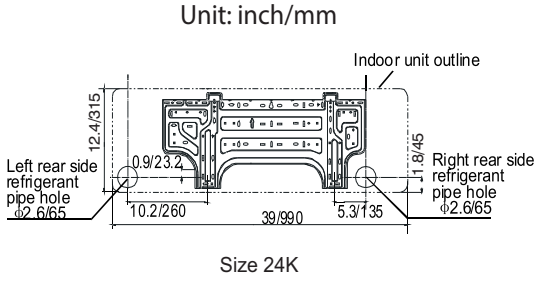

A150729

Fig. 6 – Mounting Plate - Model sizes 24

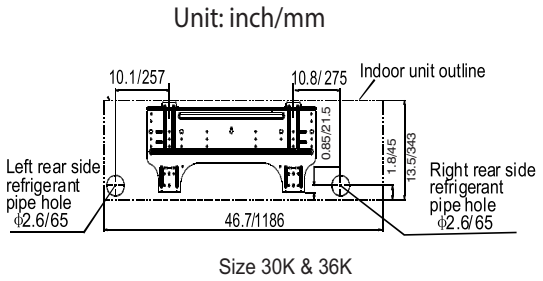

A150730

Fig. 7 – Mounting Plate - Model sizes 30, 36

1. Carefully remove the mounting plate, which is attached to the back of the indoor unit.
2. The mounting plate should be located horizontally and level on the wall. All minimum spacings shown in Fig. 3 should be maintained.
3. If the wall is block, brick, concrete or similar material, drill .2" (5 mm) diameter holes and insert anchors for the appropriate mounting screws.
4. Attach the mounting plate to the wall.

DRILL HOLE IN WALL FOR INTERCONNECTING PIPING, DRAIN AND WIRING

Refrigerant Line Routing

The refrigerant lines may be routed in any of the four directions shown in Fig. 9.

For maximum serviceability, it is recommended to have refrigerant line flare connections and the drain connections on the outside of the wall that the fan coil can be mounted on.

If piping is going through the back:

1. Determine the pipe hole position using the mounting plate as a template. Drill pipe hole diameter per values given in Fig. 4 through 7. The outside pipe hole is 1/2-in. (13 mm) min. lower than inside pipe hole, so it slants slightly downward (see Fig. 8).

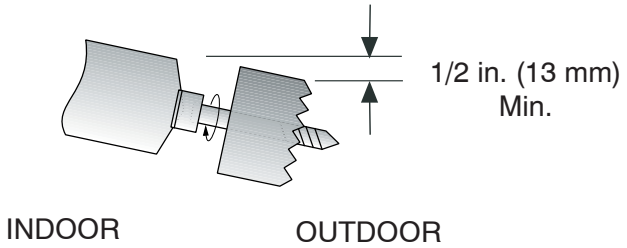

A07371

Fig. 8 – Drill Holes

If piping is going through the right or left side:

1. Use a small saw blade to carefully remove the corresponding plastic covering on side panel and drill the appropriate size hole where the pipe is going through the wall.

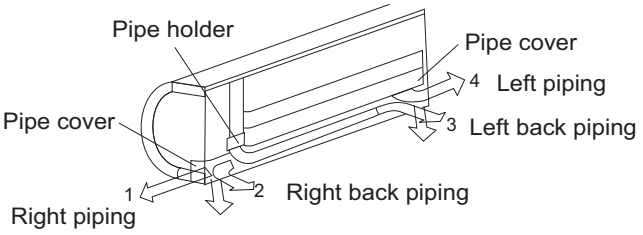

A14349

Fig. 9 – Piping Locations

ELECTRICAL DATA

Table 4—Electrical Data

HIGH WALL UNIT SIZE	INDOOR FAN			MAX FUSE CB AMP
	V–Ph–Hz	FLA	HP	
9K	115–1–60	0.33	0.053	Refer to outdoor unit installation instructions – Indoor Unit powered from the outdoor unit
12K		0.33	0.053	
9K	208/230–1–60	0.33	0.053	
12K		0.33	0.053	
18K		0.49	0.067	
24K		0.61	0.16	
30K		0.61	0.16	
36K		0.61	0.16	

LEGEND
FLA – Full Load Amps

CONNECTION DIAGRAMS

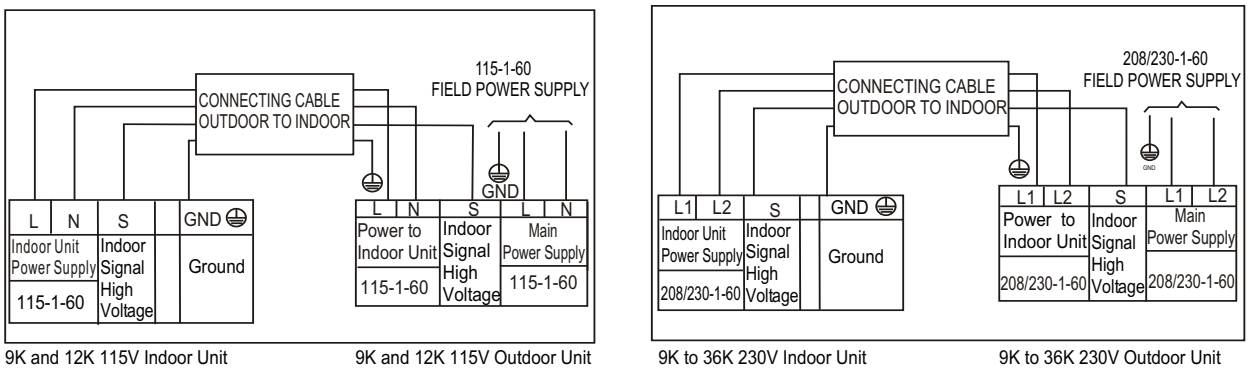

Notes:
1. Do not use thermostat wire for any connection between indoor and outdoor units.
2. All connections between indoor and outdoor units must be as shown. **The connections are sensitive to polarity and will result in a fault code.**

A150732

Fig. 10 – Connection Diagrams

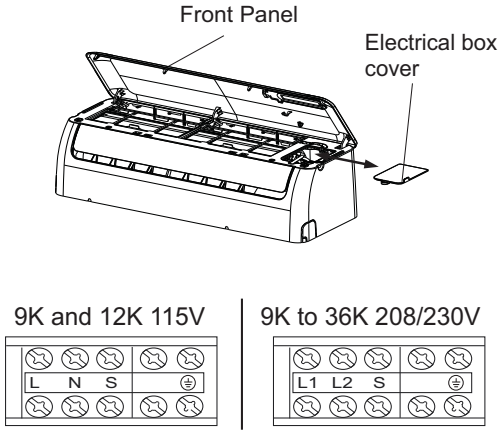

A14352

Fig. 11 – Control and Power Wiring on Indoor Unit

INSTALL ALL POWER, INTERCONNECTING WIRING, AND PIPING TO INDOOR UNIT

1. Run interconnecting piping and wiring from outdoor unit to indoor unit.
2. Run interconnecting cable through hole in wall (outside to inside).
3. Lift indoor unit into position and route piping and drain through hole in wall (inside to outside). Fit the interconnecting wiring into back side of indoor unit.
4. Put upper claw at back of indoor unit on upper hook of Mounting Plate, move indoor unit from side to side to see that it is securely hooked.
5. Open front cover of indoor unit and remove field wiring terminal block cover.
6. Pull interconnecting wire up from back of indoor unit and position in close to the terminal block on indoor unit.
7. Push lower part of indoor unit up on wall, then move indoor unit from side to side, up and down to check if it is hooked securely (see Fig. 12).

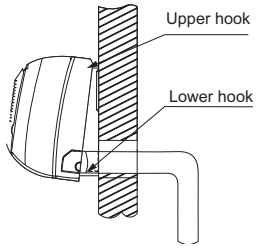

A07347a

Fig. 12 – Indoor Unit Installation

8. Connect wiring from outdoor unit per connection diagram (see Fig. 10 and Fig. 11).
9. Replace field wiring cover and close front cover of indoor unit.
10. Piping:
    a. Cut the pipe, with a pipe cutter, at 90 degrees (see Fig. 13).
    b. Remove the service connection, if provided with the unit.

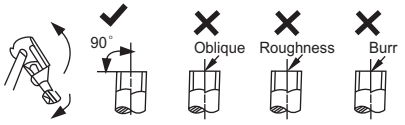

A150767

Fig. 13 – Pipe Cutting

c. Remove all the burrs from the cut cross section of the pipe avoiding any burrs inside the tubes.

d. Remove the flare nuts attached to the indoor and outdoor units.

e. Install the correct size flare nut onto the tubing and make the flare connection. Refer to Table 5 for the flare nut spaces.

Table 5—Flare Nut Spacing

OUTER DIAM. (mm)	A (mm)	
	Max.	Min.
Ø 1/4" (6.35)	0.05 (1.3)	0.03 (0.7)
Ø 3/8" (9.52)	0.06 (1.6)	0.04 (1.0)
Ø 1/2" (12.7)	0.07 (1.8)	0.04 (1.0)
Ø 5/8" (15.88)	0.09 (2.2)	0.08 (2.0)

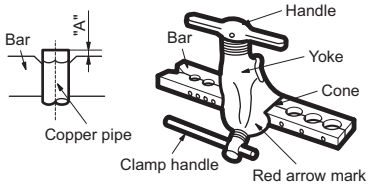

A150768

Fig. 14 – Flare Nut Spacing

f. Apply a small amount of refrigerant oil to the flare connection on the tubing.

g. Align center of the pipes and/or service valve.

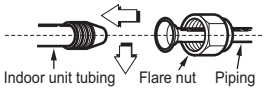

A150769

Fig. 15 – Align Pipe Center

h. Connect both the liquid and gas piping to the indoor unit

i. Tighten the flare nut using a torque wrench as specified in Table 6.

Table 6—Tightening Torque

PIPE DIAMETER INCH (mm)	TIGHTENING TORQUE	
	Ft–lb	N–m
Ø1/4" (6.35)	10 to 13	13.6 to 17.6
Ø3/8" (9.52)	24 to 31	32.5 to 42.0
Ø1/2" (12.7)	37 to 46	50.1 to 62.3
Ø5/8" (15.88)	50 to 60	67.7 to 81.3

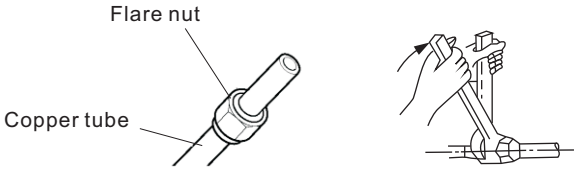

A150770

Fig. 16 – Tighten the Flare Nut

11. Connect the drain line. The drain line must not have a trap anywhere in its length, must pitch downwards, and must be insulated up to the outside wall (see Fig. 17).

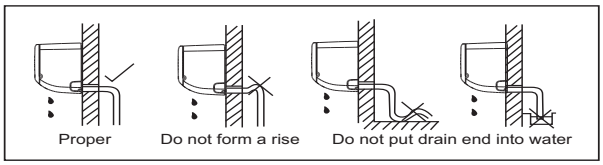

A14351

Fig. 17 – Proper Drain Hose Installation

NOTE: For proper orientation of the refrigerant piping, electrical cable and drain lines, refer to Fig. 18.

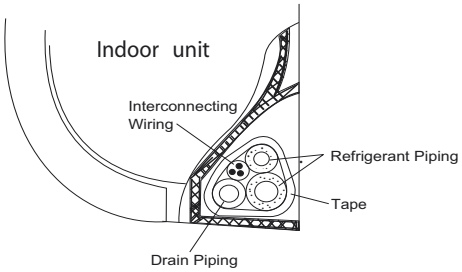

A07346

Fig. 18 – Proper Orientation

NOTE: For applications where gravity cannot be used for drainage, a condensate pump accessory is available. Consult the condensate pump Installation Instructions for more information.

WIRELESS REMOTE CONTROL INSTALLATION

Mounting Bracket (if installed on the wall)

1. Use the two screws supplied with control to attach the Mounting Bracket to the wall in a location selected by customer and within operating range.
2. Install batteries in Remote Control.
3. Place Remote Control into remote control Mounting Bracket.

NOTE: For remote control operation, refer to the unit Owner's Manual.

WIRED REMOTE CONTROLLER

For setup instructions, refer to the Wired controller installation manual.

⚠ CAUTION

UNIT DAMAGE HAZARD

Failure to follow this caution may result in equipment damage or improper operation.

Never use the system compressor as a vacuum pump.

Refrigerant tubes and indoor coil should be evacuated using the recommended deep vacuum method of 500 microns. The alternate triple evacuation method may be used if the procedure outlined below is followed. Always break a vacuum with dry nitrogen.

FINAL TUBING CHECK

IMPORTANT: Ensure certain factory tubing on the indoor unit has not shifted during shipment. Ensure tubes are not rubbing against each other or any sheet metal. Pay close attention to feeder tubes, making sure wire ties on feeder tubes are secure and tight.

START-UP

Test Operation

Perform a test operation after completing gas leak and electrical safety check (see Fig. 19).

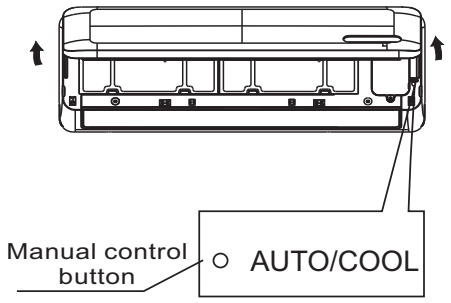

A14353

Fig. 19 – Test Operation

1. Push the "ON/OFF" button on Remote Control to begin testing.

NOTE: A protection feature prevents air conditioner from being activated for approximately 3 to 4 minutes.

2. Push MODE button, select COOLING, HEATING, FAN mode to check that all functions work correctly.
3. To run the test using the manual button in the indoor unit:
   (1.) Open front panel of the indoor unit;
   (2.) Push the manual switch once to energize the unit. The set conditions of manual operation are as follows:
   · Preset set point: 76°F (24°C)
   · Fan speed: AUTO
   · Discharge air direction: Pre-set position based on operation in "Cool" or "Heat" mode.
4. Be sure to set manual switch to "OFF" (by pushing it twice again) after finishing test operation.

SYSTEM CHECKS

1. Conceal the tubing where possible.
2. Make sure that the drain tube slopes downward along its entire length.
3. Ensure all tubing and connections are properly insulated.
4. Fasten tubes to the outside wall, when possible.
5. Seal the hole through which the cables and tubing pass.

INDOOR UNIT

1. Do all Remote Control buttons function properly?
2. Do the display panel lights work properly?
3. Does the air deflection louver function properly?
4. Does the drain work?

Explain Following Items To Customer (with the aid of the Owner's Manual):

1. How to turn air conditioner on and off; selecting COOLING, HEATING and other operating modes; setting a desired temperature; setting the timer to automatically start and stop air conditioner operation; and all other features of the Remote Control and display panel.
2. How to remove and clean the air filter.
3. How to set air deflection louver.
4. Explain care and maintenance.
5. Present the Owner's Manual and installation instructions to customer.

TROUBLESHOOTING

For ease of service, the systems are equipped with diagnostic code display LEDs on both the indoor and outdoor units. The indoor diagnostic display is a combination of flashing LEDs on the display panel or the front of the unit.

Some indoor units display error codes specifying failure modes in outdoor units. If possible, always check the diagnostic codes displayed on the indoor unit first.

The diagnostic codes displayed in the indoor and outdoor units are listed in the tables below.

INDOOR UNIT DIAGNOSTIC GUIDES

Table 7—ID Units Error Code Display

OPERATION LAMP	TIMER LAMP	DISPLAY	LED STATUS
☆ 1 time	X	E0	Indoor unit EEPROM parameter error
☆ 2 times	X	E1	Indoor / outdoor units communication error
☆ 3 times	X	E2	Zero−crossing signal detection error
☆ 4 times	X	E3	Indoor fan speed is out of control
☆ 5 times	X	E4	Indoor room temperature sensor T1 open circuit or short circuit
☆ 6 times	X	E5	Evaporator coil temperature sensor T2 open circuit or short circuit
☆ 7 times	X	EC	Refrigerant leakage detection
☆1 time	O	F0	Overload current protection
☆ 2 times	O	F1	Outdoor ambient temperature sensor T4 open circuit or short circuit
☆ 3 times	O	F2	Condenser coil temperature sensor T3 open circuit or short circuit
☆ 4 times	O	F3	Compressor discharge temperature sensor T5 open circuit or short circuit
☆ 5 times	O	F4	Outdoor unit EEPROM parameter error
☆ 6 times	O	F5	Outdoor fan speed is out of control
☆ 1 time	☆	P0	IPM malfunction or IGBT over−strong current protection
☆ 2 times	☆	P1	Over voltage or over low voltage protection
☆ 3 times	☆	P2	High temperature protection of the compressor top diagnosis and solution (only for 9k,12k models)
☆ 5 times	☆	P4	Inverter compressor drive error

O (on - light) X(off - light) ☆ (flash)

For additional diagnostic information, refer to the Service Manual

©2015 Bryant Heating & Cooling Systems ● 7310 W. Morris St. ● Indianapolis, IN 46231
Edition Date: 12/15

Catalog No. 619PB−01SI

Manufacturer reserves the right to discontinue, or change at any time, specifications or designs without notice and without incurring obligations.

Replaces: NEW