D5FSOA
Split-Type One-Way Cassette Indoor Unit
Ductless System
Sizes 6K to 18K

INSTALLATION MANUAL

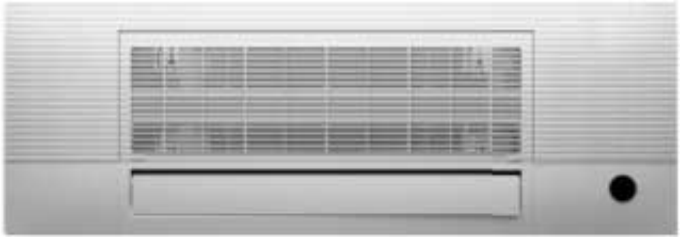

NOTE: Read the entire instruction manual before starting the installation.

TABLE OF CONTENTS

	PAGE
SAFETY CONSIDERATIONS	1
ACCESSORIES	7
SYSTEM REQUIREMENTS	8
WIRING	8
DIMENSIONS	9
CLEARANCE	10
INDOOR UNIT INSTALLATION	11
ELECTRICAL DATA	14
CONNECTION DIAGRAM	14
WIRING DIAGRAM	15
CAPACITY SETTING	16
DIP SWITCH SETTINGS	17
DRAINPIPE INSTALLATION	18
REFRIGERANT PIPING CONNECTION	20
WIRING	23
WIRELESS REMOTE CONTROL HOLDER INSTALLATION	24
OPTIONAL WIRED WALL-MOUNTED REMOTE CONTROL INSTALLATION	24
TEST RUN	25
PACKING AND UNPACKING THE UNIT	25
TROUBLESHOOTING	26

SAFETY CONSIDERATIONS

Installing, starting up, and servicing air-conditioning equipment can be hazardous due to system pressures, electrical components, and equipment location (roofs, elevated structures, etc.).

Only trained, qualified installers and service mechanics should install, start-up, and service this equipment.

Untrained personnel can perform basic maintenance functions such as coil cleaning. All other operations should be performed by trained service personnel.

When working on the equipment, observe precautions in the literature and on tags, stickers, and labels attached to the equipment.

Follow all safety codes. Wear safety glasses and work gloves. Keep a quenching cloth and fire extinguisher nearby when brazing. Use care in handling, rigging, and setting bulky equipment.

Read these instructions thoroughly and follow all warnings or cautions included in literature and attached to the unit. Consult local building codes and National Electrical Code (NEC) for special requirements. Recognize safety information.

This is the safety-alert symbol ⚠.

When you see this symbol on the unit and in instructions or manuals, be alert to the potential for personal injury. Understand these signal words: **DANGER**, **WARNING**, and **CAUTION**. These words are used with the safety-alert symbol.

DANGER identifies the most serious hazards which will result in severe personal injury or death.

WARNING signifies hazards which could result in personal injury or death.

CAUTION is used to identify unsafe practices which may result in minor personal injury or product and property damage.

NOTE is used to highlight suggestions which will result in enhanced installation, reliability, or operation.

The following symbols may be seen on the unit.

Table 1 — Symbols displayed on the indoor unit or outdoor unit

A2L	WARNING	This symbol shows that this appliance used a flammable refrigerant. If the refrigerant is leaked and exposed to an external ignition source, there is a risk of fire.
	CAUTION	This symbol shows that the operation manual should be read carefully.
	CAUTION	This symbol shows that a service personnel should be handling this equipment with reference to the installation manual.
	CAUTION	
	CAUTION	This symbol shows that information is available such as the operating manual or installation manual.

WARNING

ELECTRICAL SHOCK HAZARD

Failure to follow this warning could result in personal injury or death.

Before installing, modifying, or servicing system, the main electrical disconnect switch must be in the OFF position. There may be more than 1 disconnect switch. Lock out and tag switch with a suitable warning label.

WARNING

EXPLOSION HAZARD

Failure to follow this warning could result in personal injury or death.

Before installing, modifying, or servicing system, the main electrical disconnect switch must be in the OFF position. There may be more than 1 disconnect switch. Lock out and tag switch with a suitable warning label.

CAUTION

EQUIPMENT DAMAGE HAZARD

Failure to follow this caution may result in equipment damage or improper operation.

Do not bury more than 36 in. (914 mm) of refrigerant pipe in the ground. If any section of pipe is buried, there must be a 6 in. (152 mm) vertical rise to the valve connections on the outdoor units. If more than the recommended length is buried, refrigerant may migrate to the cooler buried section during extended periods of system shutdown. This causes refrigerant slugging and could possibly damage the compressor at start-up.

WARNING

This appliance is not intended for use by persons (including children) with reduced physical, sensory or mental capabilities, or lack of experience and knowledge, unless they have been given supervision or instruction concerning use of the appliance by a person responsible for their safety. Children should be supervised to ensure that they do not play with the appliance.

WARNING

Only use the specified wire. If the wire is damaged, it must be replaced by the manufacturer, its service agent or similarly qualified persons in order to avoid a hazard. The product must be properly grounded at the time of installation, or electric shock may occur.

For all electrical work, follow all local and national wiring standards, regulations, and the Installation Manual. Connect the cables tightly, and clamp them securely to prevent external forces from damaging the terminal. Improper electrical connections can overheat and cause fire, and may also cause shock. All electrical connections must be made according to the Electrical Connection Diagram located on the panels of the indoor and outdoor units.

All wiring must be properly arranged to ensure that the control board cover can close properly. If the control board cover is not closed properly, it can lead to corrosion and cause the connection points on the terminal to heat up, catch fire, or cause electrical shock.

Disconnection must be incorporated in the fixed wiring in accordance with NEC, CSA, and Local Codes. Do not share the electrical outlet with other appliances. Improper or insufficient power supply can cause fire or electric shock.

If connecting power to fixed wiring, an all-pole disconnection device which has at least 3mm clearances in all poles, and have a leakage current that may exceed 10mA, the residual current device (RCD) having a rated residual operating current not exceeding 30mA, and disconnection must be incorporated in the fixed wiring in accordance with NEC, CSA, and Local Codes.

⚠ WARNING

Turn of the unit and disconnect the power before performing any installation or repairing. Failure to do so can cause electric shock.

Installation must be performed by an authorized dealer or specialist. Defective installation can cause water leakage, electrical shock, or fire.

Installation must be performed according to the installation instructions. Improper installation can cause water leakage, electrical shock, or fire.

Contact an authorized service technician for repair or maintenance of this unit. This appliance shall be installed in accordance with national wiring regulations. Only use the included accessories, parts, and specified parts for installation. Using non-standard parts can cause water leakage, electrical shock, fire, and can cause the unit to fail.

Install the unit in a firm location that can support the unit's weight. If the chosen location cannot support the unit's weight, or the installation is not done properly, the unit may drop and cause serious injury and damage.

Install drainage piping according to the instructions in this manual. Improper drainage may cause water damage to your home and property.

For units that have an auxiliary electric heater, do not install the unit within 3 feet (1 meter) of any combustible materials.

If combustible gas accumulates around the unit, it may cause fire.

Do not turn on the power until all work has been completed.

When moving or relocating the unit, consult experienced service technicians for disconnection and re-installation of the unit.

How to install the appliance to its support, please read the information for details in "indoor unit installation" and "outdoor unit installation"

NOTE: The air conditioner's circuit board (PCB) is designed with a fuse to provide overcurrent protection. The specifications of the fuse are printed on the circuit board, for example: T3.15AL/250VAC, T5AL/250VAC, T3.15A/250VAC, T5A/ 250VAC, T20A/250VAC, T30A/250VAC,etc.

NOTE: Only the blast-proof ceramic fuse can be used.

⚠ WARNING

FOR FLAMMABLE REFRIGERANTS

Do not use means to accelerate the defrosting process or to clean, other than those recommended by the manufacturer.

The appliance shall be stored in a room without continuously operating ignition sources (for example: open flames, an operating gas appliance or an operating electric heater).

Do not pierce or burn.

Be aware that refrigerants may not contain an odor.

⚠ WARNING

PERSONAL INJURY AND PROPERTY DAMAGE HAZARD

For continued performance, reliability, and safety, the only approved accessories and replacement parts are those specified by the equipment manufacturer. The use of non-manufacturer approved parts and accessories could invalidate the equipment limited warranty and result in fire risk, equipment malfunction, and failure. Review the manufacturer's instructions and replacement parts catalogs available from your equipment supplier.

R-454B Refrigerant Safety Group A2L **R-454B**

WARNING – Risk of Fire due to Flammable Refrigerant Used. Follow Handling Instructions Carefully in Compliance with National Regulations

NOTE: Risk of Fire. Flammable refrigerant used. To be repaired only by trained service personnel. Do not puncture refrigerant tubing.

FCC

This device complies with part 15 of the FCC Rules. Operation is subject to the following two conditions: (1) This device may not cause harmful interference, and (2) this device must accept any interference received, including interference that may cause undesired operation.

NOTE: This equipment has been tested and found to comply with the limits for a Class B digital device, pursuant to part 15 of the FCC Rules. These limits are designed to provide reasonable protection against harmful interference in a residential installation. This equipment generates, uses and can radiate radio frequency energy and, if not installed and used in accordance with the instructions may cause harmful interference to radio communications. However, there is no guarantee that interference will not occur in a particular installation. If this equipment does cause harmful interference to radio or television reception, which can be determined by turning the equipment off and on, the user is encouraged to try t o correct the interference by one or more of the following measures:

- **Reorient or relocate the receiving antenna**
- **Increase the distance between the equipment and the receiver**
- **Connect the equipment into an outlet on a circuit different from that to which the receiver is connected.**
- **Consult the dealer or an experienced radio/TV technician for assistance.**

MODIFICATION: Any changes or modifications not expressly approved by the grantee of this device could void the user's authority to operate this device.

For R-454B Refrigerant Charge Amount and Minimum Room Area:

The unit you purchased may be one of the types in the table below. The indoor and outdoor units are designed to be used together. Please check the unit you purchased: The indoor unit should be installed at least 7.6 feet / 2.3 meters above the floor; the height of the room cannot be less than 7.3 feet / 2.2 meters; and the minimum room area of operating or storage should be specified in Table 2.

Table 2 — A (min)

hinst: Height Above Floor Level to Center of Indoor Unit / feet (meters

MC or Mrel Refrigerant Charge Amount pounds (kilograms)		≤ 7.2 (2.2)	7.5 (2.3)	7.9 (2.4)	8.5 (2.6)	9.2 (2.8)	9.8 (3.0)
	≤ 3.91 (1.776)	12 (1.10)					
	4.0 (1.8)	60 (5.53)	57 (5.29)	55 (5.07)	50 (4.68)	47 (4.34)	44 (4.05)
	4.4 (2.0)	66 (6.14)	63 (5.88)	61 (5.63)	56 (5.2)	52 (4.83)	48 (4.5)
	4.9 (2.2)	73 (6.76)	70 (6.46)	67 (6.19)	62 (5.72)	57 (5.31)	53 (4.95)
	5.3 (2.4)	79 (7.37)	76 (7.05)	73 (6.76)	67 (6.24)	62 (5.79)	58 (5.41)
	5.7 (2.6)	86 (7.99)	82 (7.64)	79 (7.32)	73 (6.76)	68 (6.27)	63 (5.86)
	6.2 (2.8)	93 (8.6)	89 (8.23)	85 (7.88)	78 (7.28)	73 (6.76)	68 (6.31)
	6.6 (3.0)	99 (9.21)	95 (8.81)	91 (8.45)	84 (7.8)	78 (7.24)	73 (6.76)
	7.1 (3.2)	106 (9.83)	101 (9.4)	97 (9.01)	90 (8.32)	83 (7.72)	78 (7.21)
	7.5 (3.4)	112 (10.44)	108 (9.99)	103 (9.57)	95 (8.84)	88 (8.2)	82 (7.66)
	7.9 (3.6)	119 (11.06)	114 (10.58)	109 (10.14)	101 (9.36)	94 (8.69)	87 (8.11)
	8.4 (3.8)	126 (11.67)	120 (11.16)	115 (10.7)	106 (9.88)	99 (9.17)	92 (8.56)
	8.8 (4.0)	132 (12.29)	126 (11.75)	121 (11.26)	112 (10.4)	104 (9.65)	97 (9.01)
	9.3 (4.2)	139 (12.9)	133 (12.34)	127 (11.82)	117 (10.91)	109 (10.14)	102 (9.46)
	9.7 (4.4)	145 (13.51)	139 (12.93)	133 (12.39)	123 (11.43)	114 (10.62)	107 (9.91)
	10.1 (4.6)	152 (14.13)	145 (13.51)	139 (12.95)	129 (11.95)	119 (11.1)	112 (10.36)
	10.6 (4.8)	159 (14.74)	152 (14.1)	145 (13.51)	134 (12.47)	125 (11.58)	116 (10.81)
	11.0 (5.0)	165 (15.36)	158 (14.69)	152 (14.08)	140 (12.99)	130 (12.07)	121 (11.26)
A-min: Required Minimum Room Area / Square Feet (Square Meters)							
AREA FORMULA	**Amin** is the required minimum room area in ft^2 /m^2 **mc** is the actual refrigerant charge in the system in ft/kg **mREL** is the refrigerant releasable charge in ft/kg **hinst** is the height of the center of the appliance relative to the floor of the room after installation. **WARNING:** The minimum room area or minimum room area of conditioned space is based on releasable charge or total system refrigerant charge.						

Airflow Information

When the unit detects a refrigerant leak, the minimum airflow of the indoor unit is as follows (applicable to the units with refrigerant sensors only).

For R-454B Refrigerant Charge Amount and Minimum Room Area

The unit you purchased may be one of the types listed in Table 4. The indoor and outdoor units are designed to work together. Check the unit you purchased. The indoor unit should be installed at least 7.6 feet (2.3 meters) above the floor, the height of the room can not be less than 7.3 feet (2.2 meters); and the minimum room area of opening or storage should be specified in Table 2.

Table 3 — Nominal Air Volume

MODEL	06K	09K	12K	18K
Nominal Air Volume CFM (M^3/H)	342 (580)	342 (580)	353 (600)	400 (680)

Table 4 — Model Numbers

DESCRIPTION	BTUH	VOLTAGE	MODEL NUMBER
0.5	06	208/230V	D5FSOAH06XAK
0.75/1.00	09/12		D5FSOAH12XAK
1.50	18		D5FSOAH18XAK

1. **Installation (where refrigerant pipes are allowed)**

   Any person who is involved with working on or breaking into a refrigerant circuit should hold a current valid certificate from an industry-accredited assessment authority, which authorizes their competence to handle refrigerants safely in accordance with an industry recognized assessment specification.

   Maintenance and repair requiring the assistance of other skilled personnel shall be carried out under the supervision of the person competent in the use of flammable refrigerants.

   That the installation of pipe-work shall be kept to a minimum.

   That pipe-work shall be protected from physical damage.

   Where refrigerant pipes shall be compliance with national gas regulations.

   That mechanical connections shall be accessible for maintenance purposes.

   Be more careful that foreign matter (oil, water, etc) does not enter the piping. Also, when storing the piping, securely seal the opening by pinching, taping, etc.

   All working procedure that effects safety means shall only be carried by competent persons.

   Appliance shall be stored in a well ventilated area where the room size corresponds to the room area as specific for operation.

   Joints shall be tested with detection equipment with a capability of 1/8 oz (5grams)/year of refrigerant or better, with the equipment in standstill and under operation or under a pressure of at least these standstill or operation conditions after installation.

   In cases that require mechanical ventilation, ventilation openings shall be kept clear of obstruction.

   LEAK DETECTION SYSTEM installed. Unit must be powered except for service. For the unit with refrigerant sensor, when the refrigerant sensor detects refrigerant leakage, the indoor unit will display a error code and emit a buzzing sound, the compressor of outdoor unit will immediately stop, and the indoor fan will start running. The service life of the refrigerant sensor is 15 years. When the refrigerant sensor malfunctions, the indoor unit will display the error code FHCC. The refrigerant sensor can not be repaired and can only be replaced by the manufacture. It shall only be replaced with the sensor specified by the manufacture.

2. **Because a FLAMMABLE REFRIGERANT is used**

   The requirements for installation space of appliance and/or ventilation requirements are determined according to:

   – the mass charge amount (M) used in the appliance,

   –-the installation location,

   –-the type of ventilation of the location or of the appliance.

   –-piping material, pipe routing, and installation shall include protection from physical damage in operation and service, and be in compliance with national and local codes and standards, such as ASHRAE 15 or CSA B52. All field joints shall be accessible for inspection prior to being covered or enclosed.

   –-that protection devices, piping, and fittings shall be protected as far as possible against adverse environmental effects, for example, the danger of water collecting and freezing in relief pipes or the accumulation of dirt and debris;

   –-that piping in refrigeration systems shall be so designed and installed to minimize the likelihood of hydraulic shock damaging the system;

   –-that steel pipes and components shall be protected against corrosion with a rustproof coating before applying any insulation;

   –-that precautions shall be taken to avoid excessive vibration or pulsation;

   –-the minimum floor area of the room shall be mentioned in the form of a table or a single figure without reference to a formula;

   –-after completion of field piping for split systems, the field pipework shall be pressure tested with an inert gas and then vacuum tested prior to refrigerant charging, according to the following requirements:

   a. The required nitrogen pressure is 500 psi

   b. The test pressure after removal of pressure source shall be maintained for at least 1 hour with no decrease of pressure indicated by the test gauge, with test gauge resolution not exceeding 5% of the test pressure.

   c. During the evacuation test, after achieving a vacuum level specified in the manual or less, the refrigeration system shall be isolated from the vacuum pump and the pressure shall not rise above 1500 microns within 10 min. The vacuum pressure level shall be specified in the manual, and shall be the lessor of 500 microns or the value required for compliance with national and local codes and standards, which may vary between residential, commercial, and industrial buildings.

   –Field-made refrigerant joints indoors shall be tightness tested according to the following requirements: The test method shall have a sensitivity of 1/8 oz (5grams) per year of refrigerant or better under a pressure of at least 125% of the maximum allowable pressure. No leak shall be detected.

3. **Qualification of Workers**

   Any maintenance, service and repair operations must be performed by skilled and authorized personnel. Every working procedure that effects safety means shall only be carried out by competent persons that joined the training and achieved competence should be documented by a certificate. The training of these procedures is carried out by national training organizations or manufacturers that are accredited to teach the relevant national competency standards that may be set in legislation. Examples for such working procedures are:

   - breaking into the refrigerating circuit;
   - opening of sealed components;
   - opening of ventilated enclosures.

4. **Ventilated area**

   Ensure that the area is in the open or that it is adequately ventilated before breaking into the system or conducting any hot work. A degree of ventilation shall continue during the period that the work is carried out. The ventilation should safely disperse any released refrigerant and preferably expel it externally into the atmosphere.

5. **Cabling**

   Check that cabling is not subjected to wear, corrosion, excessive pressure, vibration, sharp edges or any other adverse environmental effects. The check shall also take into account the effects of aging or continual vibration from sources such as compressors or fans.

6. Detection of flammable refrigerants

Under no circumstances shall potential sources of ignition be used in the searching for or detection of refrigerant leaks. A halide torch (or any other detector using a naked flame) shall not be used.

The following leak detection methods are deemed acceptable for refrigerant systems. Electronic leak detectors that have a sensitivity of 1/8 oz (5g)/year may be used to detect leaks of flammable refrigerants. (Detection equipment shall be calibrated in a refrigerant-free area.) Ensure that the detector is not a potential source of ignition and is suitable for the refrigerant used. Leak detection equipment shall be set at a percentage of the LFL of the refrigerant and shall be calibrated to the refrigerant employed, and the appropriate percentage of gas (25% maximum) is confirmed. Leak detection fluids are also suitable for use in external leak detection.

NOTE: Examples of leak detection fluids are:

–- bubble method,

–- fluorescent method agents.

If a leak is suspected, all open flames shall be removed/extinguished.

If a leakage of refrigerant is found which requires brazing, all of the refrigerant shall be recovered from the system, or isolated (by means of shut off valves) in a part of the system remote from the leak. See the following instructions of removal of refrigerant.

7. Evacuation

When breaking into the refrigerant circuit to make repairs or for any other purpose, conventional procedures shall be used. However, for flammable refrigerants it is important that best practice be followed, since flammability is a consideration. The following procedure shall be adhered to:

- safely remove refrigerant following local and national regulations; evacuate
- purge the circuit with nitrogen
- evacuate (requirement)
- continuously flush or purge with nitrogen when using flame to open circuit
- open the circuit

The refrigerant charge shall be recovered into the correct recovery cylinders. Charging must be performed by liquid charging method. For appliances containing flammable refrigerants, the system shall be purged with oxygen-free nitrogen to render the appliance safe for flammable refrigerants. This process might need to be repeated several times. Compressed air or oxygen shall not be used for purging refrigerant systems.

For appliances containing flammable refrigerants, refrigerants purging shall be achieved by breaking the vacuum in the system with oxygen-free nitrogen and continuing to fill until the working pressure is achieved, then venting to atmosphere, and finally pulling down to a vacuum (requirement). This process shall be repeated until no refrigerant is within the system (requirement). When the final oxygen-free nitrogen charge is used, the system shall be vented down to atmospheric pressure to enable work to take place. The outlet for the vacuum pump shall not be close to any potential ignition sources, and ventilation shall be available.

Recovery: When removing refrigerant from a system, either for servicing or decommissioning, it is recommended good practice that all refrigerants are removed safely.

When transferring refrigerant into cylinders, ensure that only appropriate refrigerant recovery cylinders are employed. Ensure that the correct number of cylinders for holding the total system charge is available. All cylinders to be used are designated.

8. Charging procedures

In addition to conventional charging procedures, the following requirements shall be followed:

- Work shall be undertaken with appropriate tools only (In case of uncertainty, please consult the manufacturer of the tools for use with flammable refrigerants).
- Ensure that contamination of different refrigerants does not occur when using charging equipment. Hoses or lines shall be as short as possible to minimize the amount of refrigerant contained in them.
- Charging must be performed by liquid charging method.
- Ensure that the refrigeration system is grounded prior to charging the system with refrigerant.
- Label the system when charging is complete (if not already).
- Extreme care shall be taken not to overfill the refrigeration system.
- Prior to recharging the system it shall be pressure tested with oxygen free nitrogen (OFN). The system shall be leak tested on completion of charging but prior to commissioning. A follow up leak test shall be carried out prior to leaving the site.

ACCESSORIES

The air conditioning system comes with the following accessories. Use all of the installation parts and accessories to install the unit. Improper installation may result in water leakage, electrical shock and fire, or cause the equipment to fail. The items are not included with the unit must be purchased separately.

Table 5 — Accessories

Name of Accessory	Quantity	Image
Manual	2	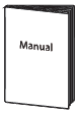
Installation Cardboard Template	1	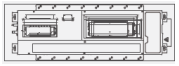
Remote Controller	1	
Cable Tie	6	
Drain Adapter	1	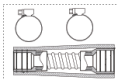
Panel	1	
Condensate Tray	1	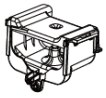
Rubber Ring	1	
AAA Battery	2	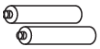
Brass Nut	2	
Screw kits (ST8*50, M4*22, ST3.9*16, ST4.8*12, ST3.9*10)	1 (8,8,2,2,3)	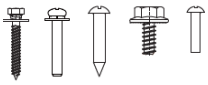
Wired Controller (Purchased Separately)	1	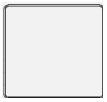
Remote Controller Holder	1	

Table 6 — Pipe Specification

Name	Model	Liquid Side	Gas Side	Remarks
Connecting Pipe Assembly	6K	Φ1/4 in (Φ6.35mm)	Φ3/8 in (Φ9.52mm)	Pipes are not included in the accessories. They must be purchased separately from the local dealer.
	9K/12K	Φ1/4 in (Φ6.35mm)	Φ3/8 in (Φ9.52mm)	
	18K	Φ1/4 in (Φ6.35mm)	Φ1/2 in (Φ12.7mm)	

NOTE: Panel installation should be performed after wiring and piping have been completed.

SYSTEM REQUIREMENTS

Allow sufficient space for airflow and unit service (see Fig. 2 — on page 10 for the minimum required distances between the unit and walls or ceilings.)

Table 7 — - Indoor Unit Pipe Sizes

UNIT SIZES		6K (208/230V)	9K (208/230V)	12K (208/230V)	18K (208/230V)
GAS PIPE	in	3/8”	3/8”	1/2”	1/2”
	(mm)	9.52	9.52	12.7	12.7
LIQUID PIPE	in	1/4”	1/4”	1/4”	1/4”
	(mm)	6.35	6.35	6.35	6.35

WIRING

All wires must be sized per NEC (National Electrical Code) or CEC (Canadian Electrical Code) and local codes. See the rating plate and/or the installation instructions of the compatible outdoor unit for MCA (minimum circuit amps) and MOCP (maximum over current protection) to correctly size the wires and the disconnect fuse or breakers respectively.

Recommended Connection Method for Power and Communication Wiring:

The main power is supplied to the outdoor unit. The field supplied 14/3 power/communication wiring from the outdoor unit to the indoor unit consists of four (4) wires and provides the power for the indoor unit. Two wires are high voltage AC power, one is communication wiring and the other is a ground wire. Wiring between the indoor and outdoor unit is polarity sensitive. The use of BX wire is NOT recommended.

If installed in a high Electromagnetic field (EMF) area and communication issues exists, a 14/2 stranded shielded wire can be used to replace wires 2 and 3 between the outdoor unit and indoor unit landing the shield onto ground in the outdoor unit only.

⚠ WARNING

EQUIPMENT DAMAGE HAZARD

Failure to follow this caution may result in equipment damage or improper operation.

Wires should be sized based on NEC and local codes.

⚠ CAUTION

EQUIPMENT DAMAGE HAZARD

Failure to follow this caution may result in equipment damage or improper operation.

Be sure to comply with local codes while running wire from the indoor unit to the outdoor unit.

Every wire must be connected firmly. Loose wiring may cause the terminal to overheat or result in unit malfunction. A fire hazard may also exist. Ensure all wiring is tightly connected.

No wire should touch the refrigerant tubing, compressor or any moving parts.

Disconnecting means must be provided and shall be located within sight and readily accessible from the air conditioner. Connecting cable with conduit shall be routed through the hole in the conduit panel.

NOTE: The main power is supplied to the outdoor unit. When disconnecting the power of the outdoor unit, the indoor unit would lose power. A disconnect switch is not required on the Indoor unit side on the wiring between the Outdoor and Indoor unit. A 3 pole disconnect may be used for extra protection between the Indoor and Outdoor Unit.

DIMENSIONS

Installation place

(unit: inch/mm)

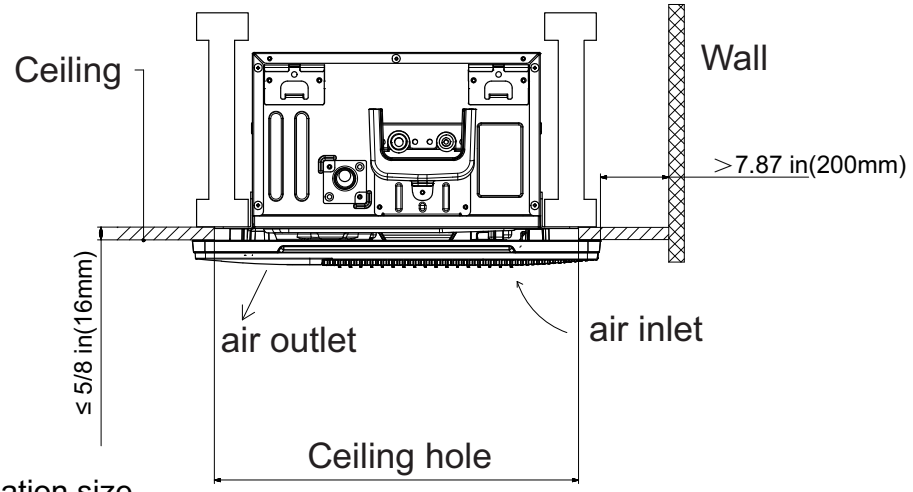

Indoor parts installation size

(unit: inch/mm)

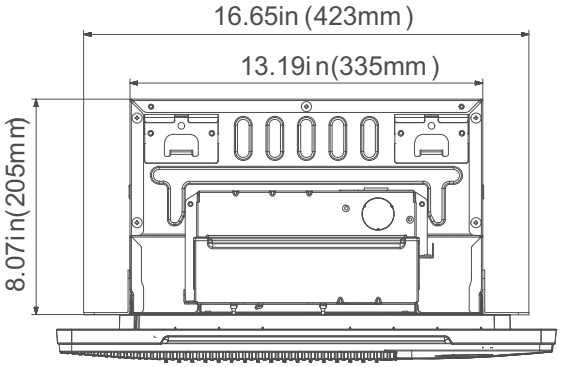

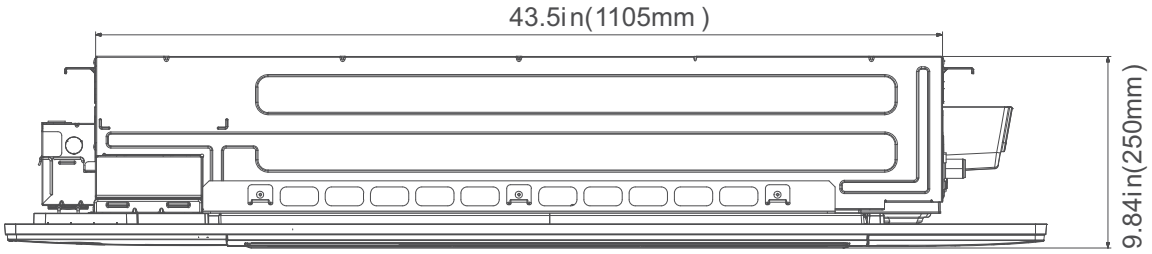

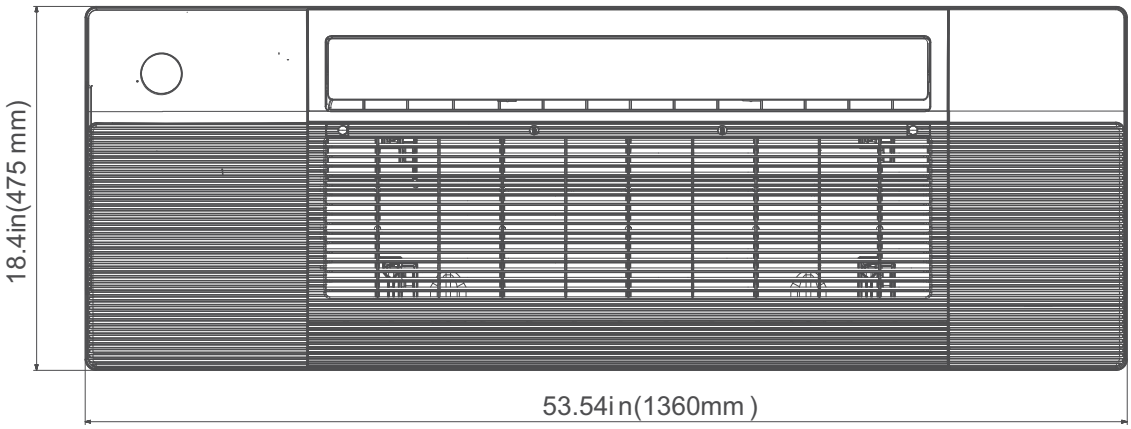

Fig. 1 —Dimensions

CLEARANCE

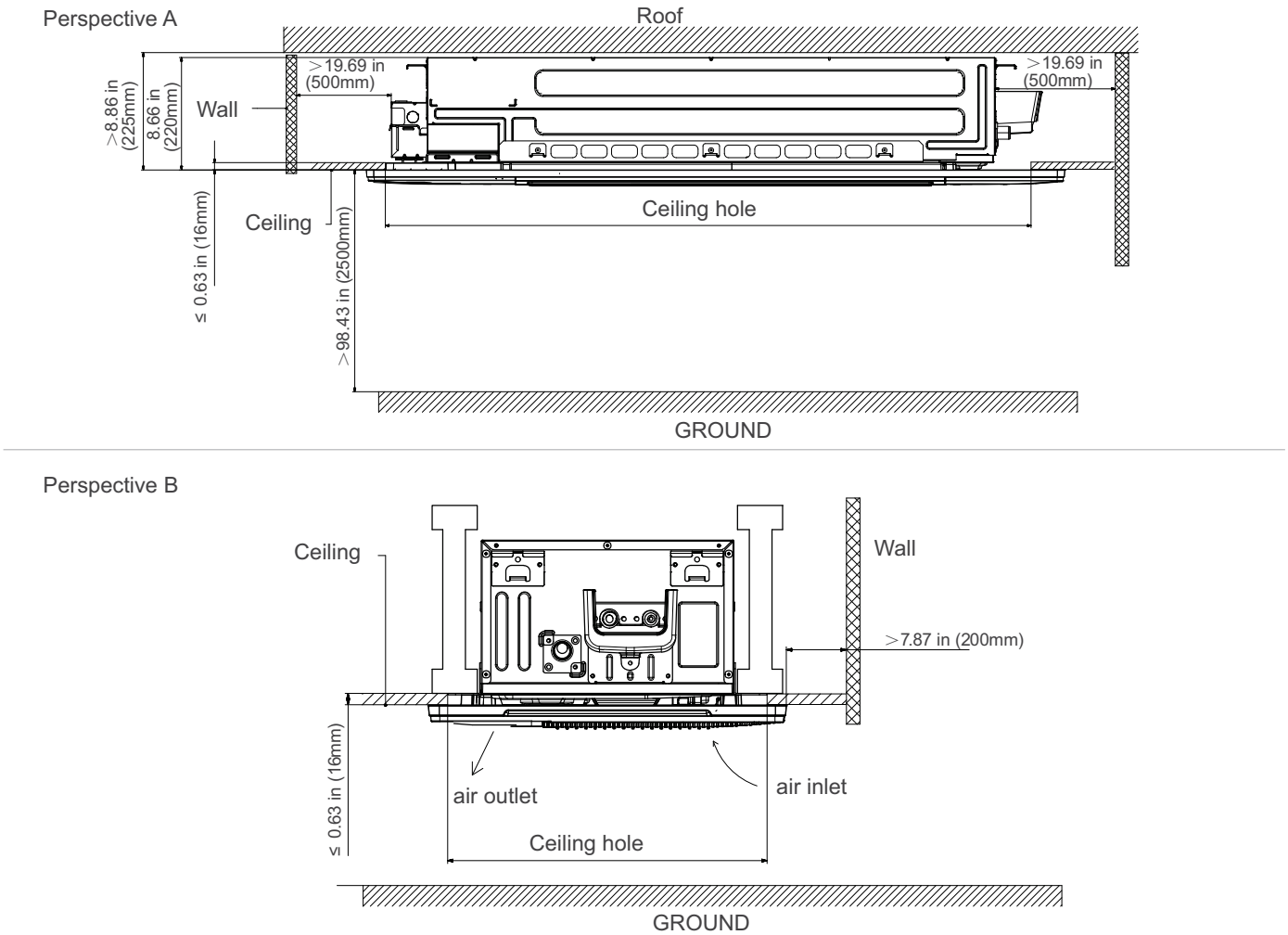

Fig. 2 —Clearance

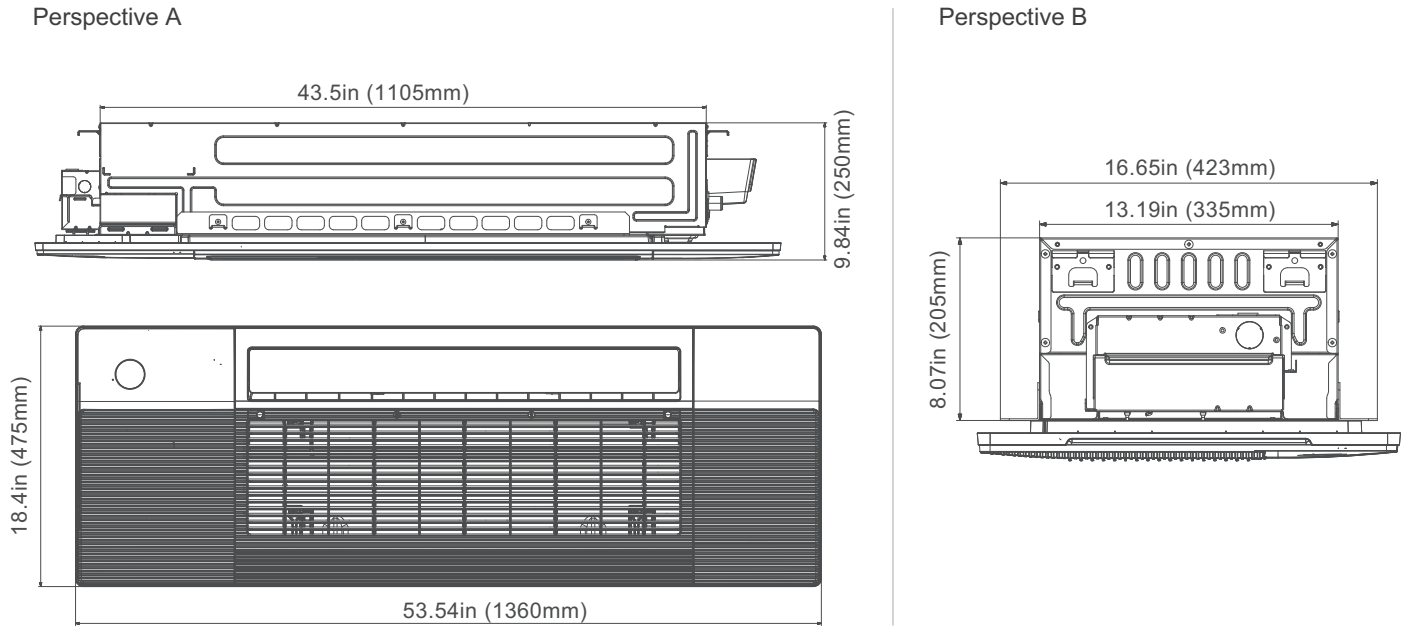

Fig. 3 —Clearance - Perspectives A and B

INDOOR UNIT INSTALLATION

PRODUCT OVERVIEW

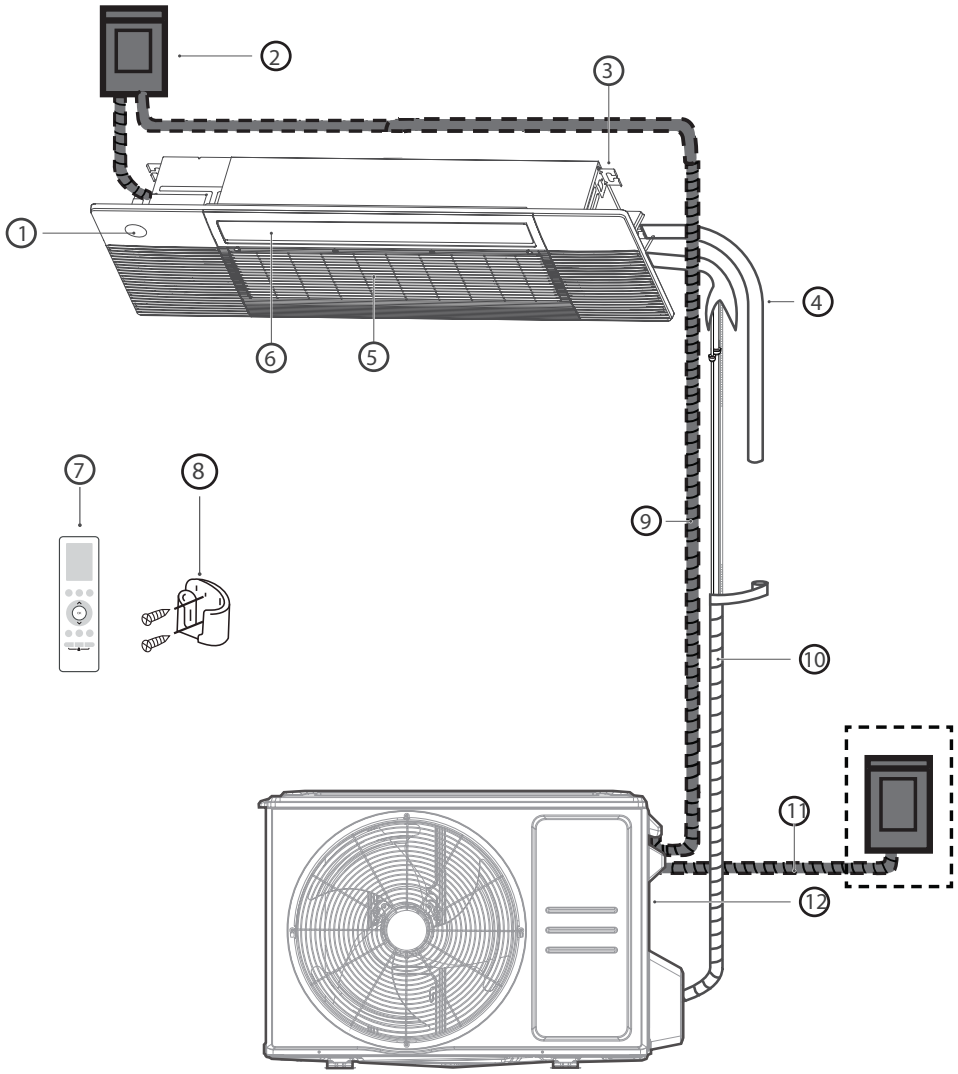

1. Display panel
2. Circuit breaker
3. Installation part
4. Drain Pipe (purchase separately)
5. Air inlet (with air filter in it)
6. Air outlet(Air flow louver)
7. Remote controller
8. Remote controller Holder (purchase separately)
9. Connection cable (purchase separately)
10. Refrigerant Piping (purchase separately)
11. Outdoor unit power cable (purchase separately)
12. Outdoor Unit

Fig. 4 —Product System Components

NOTE: An additional circuit breaker is required during the installation.

SELECT INSTALLATION LOCATION

NOTE: Before installing the indoor unit, you must choose an appropriate location. The following are standards that will help you choose an appropriate location for the unit.

Before Installation

- Determine the route to move the unit to the installation site.
- First unseal and unpack the unit. Then, hold the seats of the hanger (4 pcs) to move the unit. Refrain from exerting force on other parts of the unit, especially the refrigerant piping, water discharge piping, and the plastic parts.

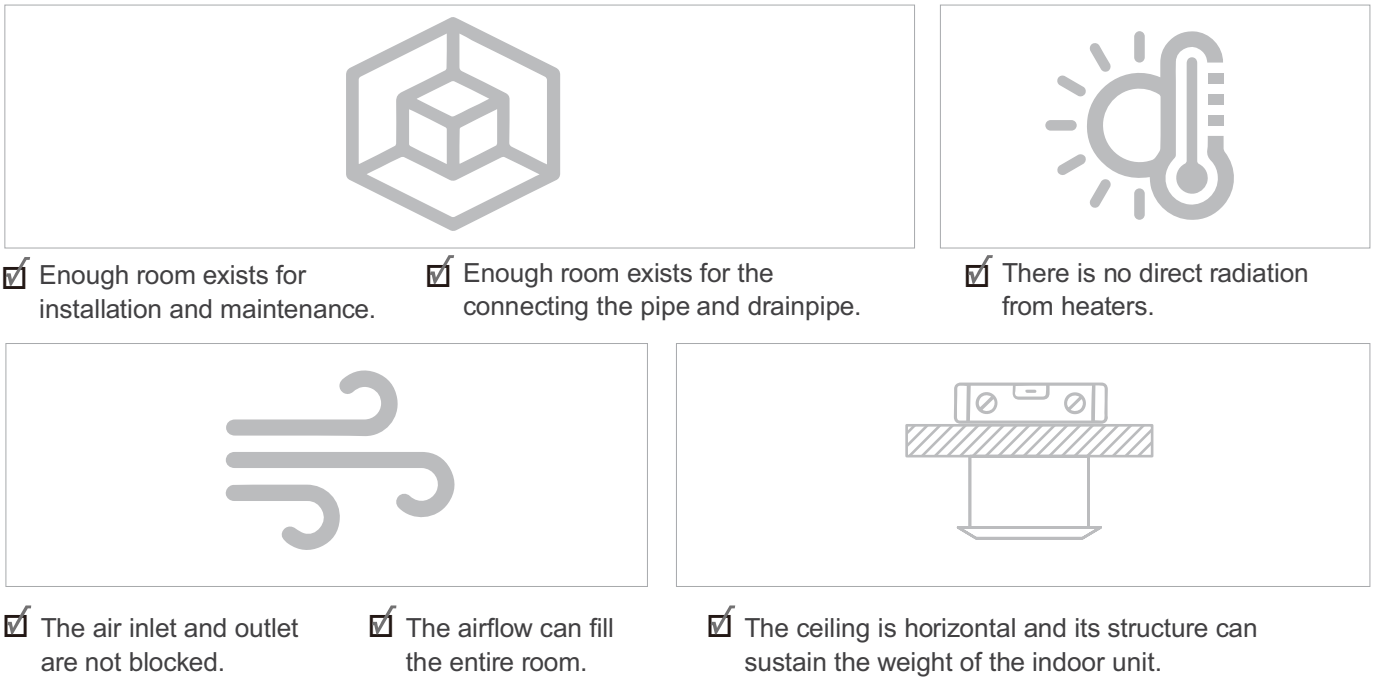

Fig. 5 —Proper Installation Location Standards

DO NOT install unit in the following locations

- Areas with oil drilling or fracking
- Coastal areas with high salt content in the air
- Areas with caustic gases in the air, such as hot springs
- Areas that experience power fluctuations, such as factories
- Enclosed spaces, such as cabinets kitchens that use natural gas
- Areas with strong electromagnetic waves
- Areas that store flammable materials or gas
- Rooms with high humidity, such as bathrooms or laundry rooms

Confirm various sizes and clearance.

See Figs. 2 and 3.

INDOOR UNIT INSTALLATION

Make sure that only specified components are used for the installation works.

1. Remove the four screws to open the indoor control box and circuit breaker box.

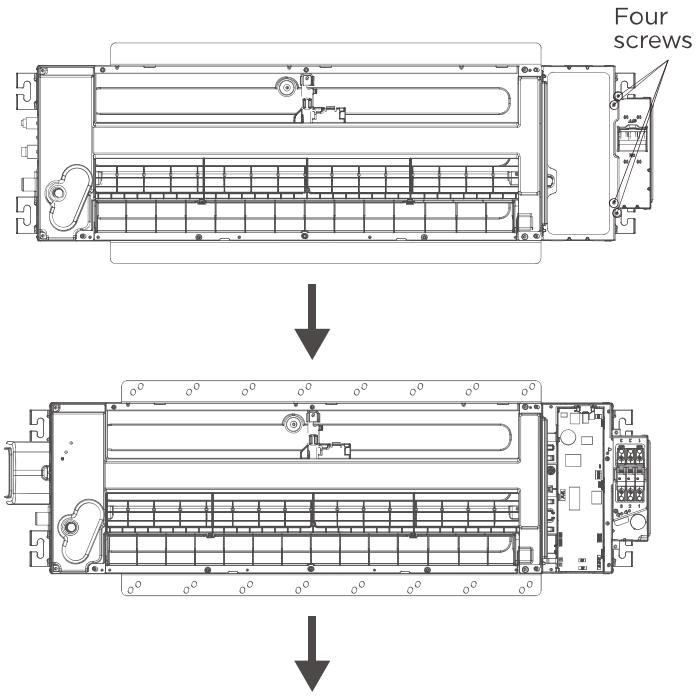

2. Remove the knockout on the circuit breaker box.

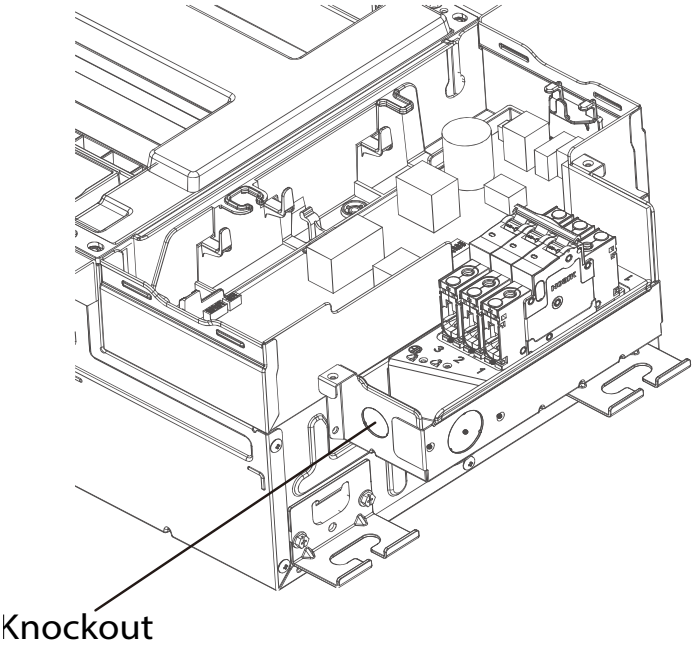

Fig. 6 —Remove Knockout

3. Connect the wire to the circuit breaker according to the wire connecting diagram.

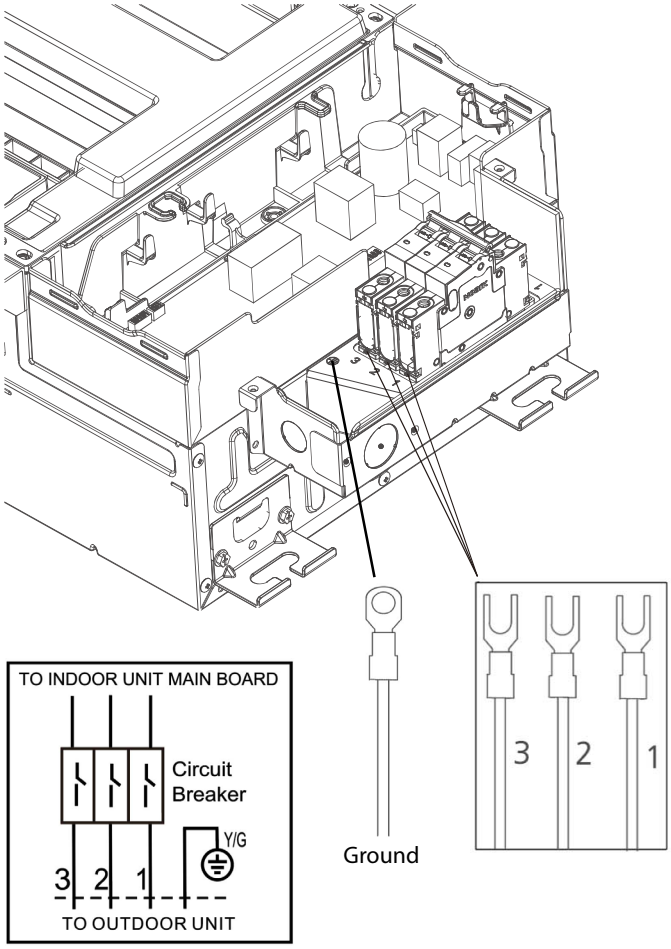

Fig. 7 —Connect Wire to Circuit Breaker

WARNING

The ground wire should be tightened firmly.

4. Tighten Grounding Wire

ELECTRICAL DATA

Table 8 — Electrical Data

Indoor Unit		06K	09K	12K	18K
Minimum Circuit Ampacity (MCA)	A	3	3	3	3
Maximum Overcurrent Protection Ampacity (MOPA)	A	15	15	15	15
Voltage-Phase-Frequency	V-Ph-Hz	208/230-1-60			
Max – Min Voltage Range	V	253-187			
Cooling (with hyper heat ODU)					
Running current	(A)	3	4.3	4.3	8.3
Power consumption	(W)	427	923	923	1337
Heating (with hyper heat ODU)					
Running current	(A)	4	4.6	4.6	12
Power consumption	(W)	578	1030	1030	1950

CONNECTION DIAGRAM

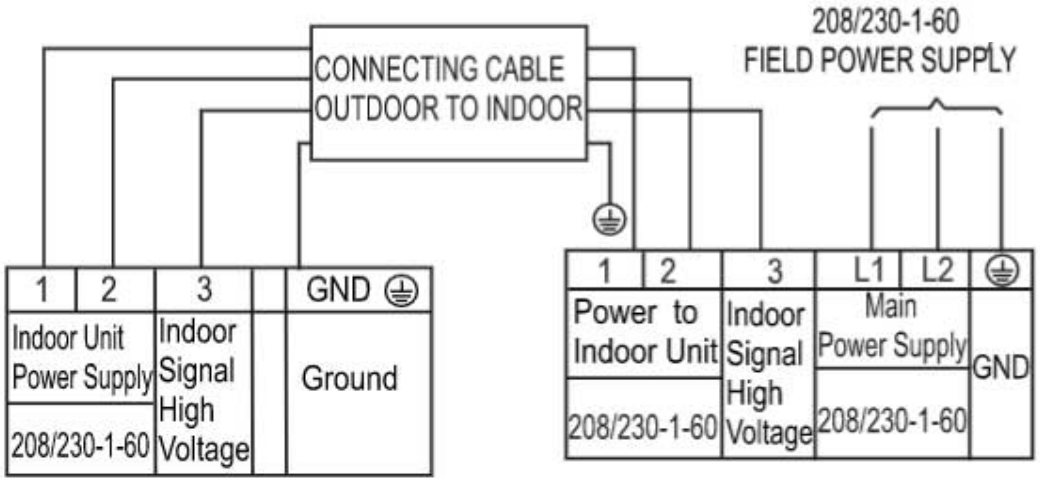

Fig. 8 —Connection Diagram Sizes 06K-18K

Manufacturer reserves the right to change, at any time, specifications and designs without notice and without obligations.

WIRING DIAGRAM

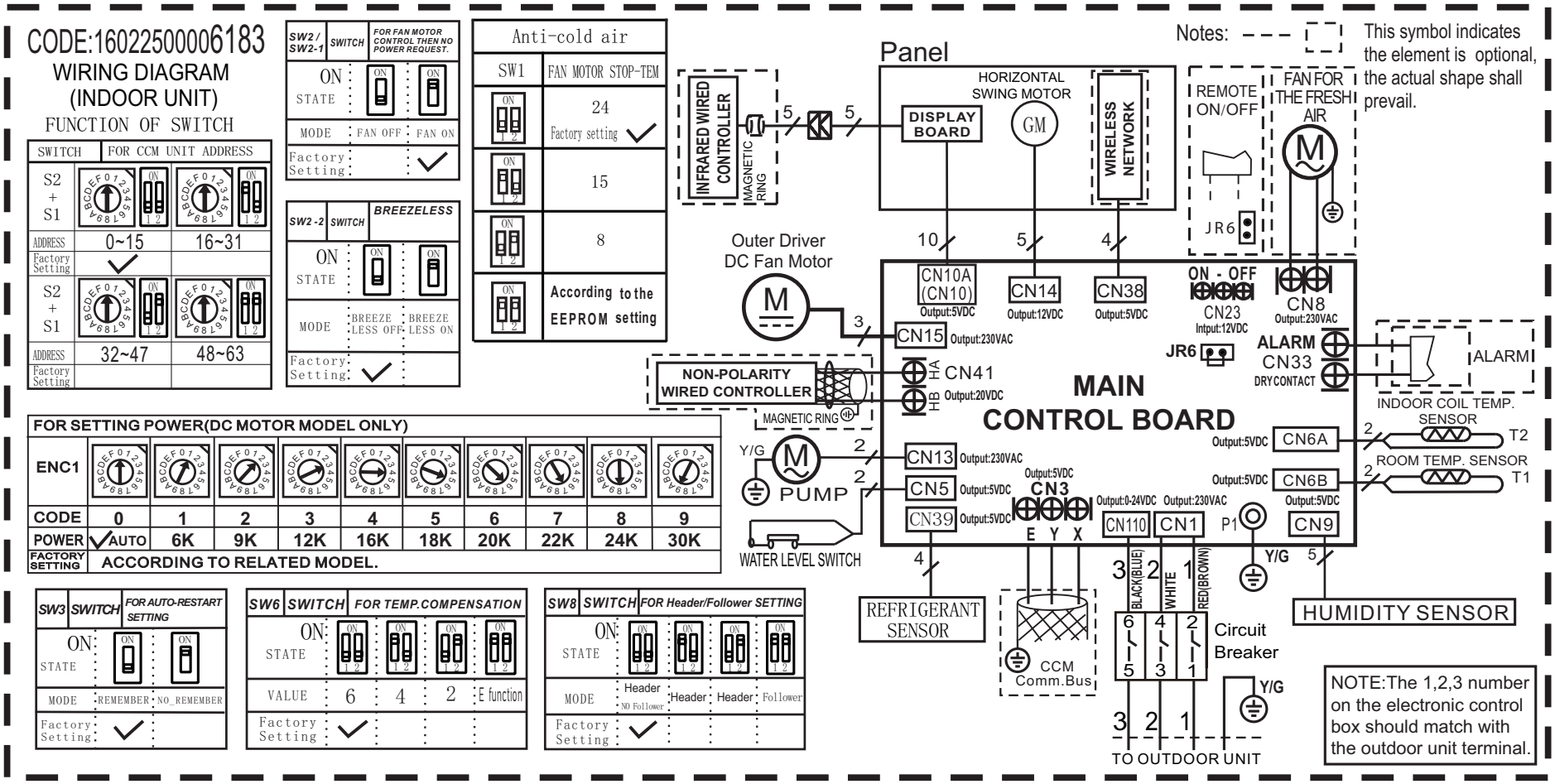

Fig. 9 —Wiring Diagram Sizes 06-18K

NOTE: Refer to the diagram label on the actual unit.

Manufacturer reserves the right to change, at any time, specifications and designs without notice and without obligations.

CAPACITY SETTING

One-way cassette model 45MCCAQ12XA3 is dual capacity and can be downsized by adjusting the dial switch ENC1 found in the main board.

Table 9 — Capacity Setting

Description	BTUH	V-PH-HZ	ID Model Number
CASSETTE	6	208/230-1-60	D5FSOAH06XAK
	9		D5FSOAH12XAK
	12		
	18		D5FSOAH18XAK

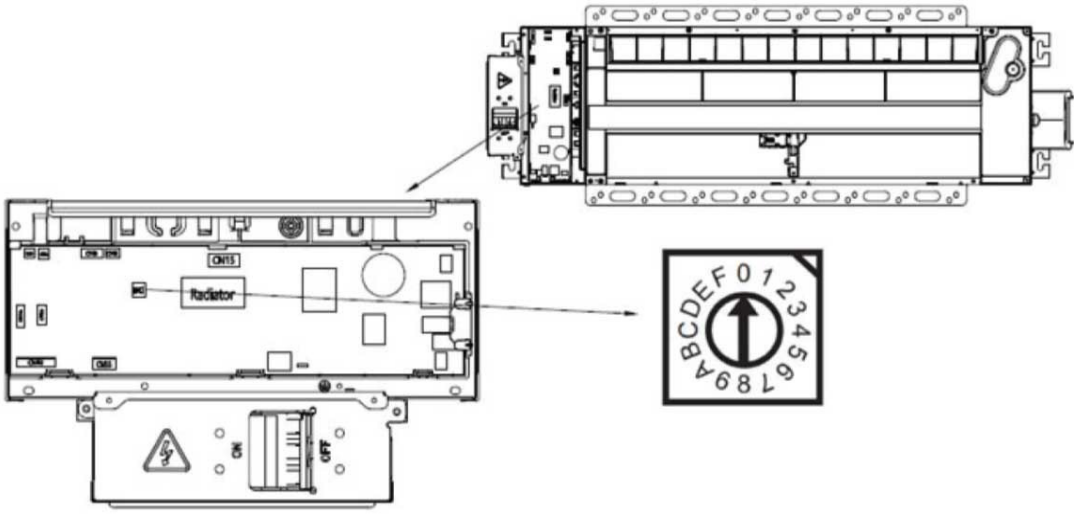

Fig. 10 —Capacity Setting

12K to 09K Setting

The default capacity of D5FSOAH12XAK is 12K BTUH, to downsize it to a 9K model.

1. The default ENC1 setting for 12K unit is 0.

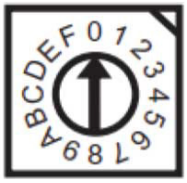

2. Disconnect the power first.
3. Open the electronic control box, change ENC1 to 2. Then close the electronic control box

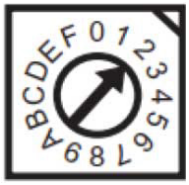

Fig. 11 —Capacity Setting (12K to 9K)

4. Connect the power again, the capacity of the unit has changed to 9K.

DIP SWITCH SETTINGS

No.	DIAL CODE	FUNCTION	ON	OFF	1 ON and 2 OFF	1 ON and 2 ON	1 OFF and 2 ON	1 OFF and 2 OFF
1	S1+Rotary Switch S2	Central control address selection	N/A	N/A	S2 + 48	S2 + 16	S2 + 32	S2
2	SW1	Indoor fan stop temperature (TEL0) for normal anti-cold air function in Heating mode	N/A	N/A	According to EEROM setting	15°C	8°C	Default / 24°C
3	SW2-1	For speed control after compressor stops (not applicable to North America models)	Lowest Speed	Fan STOP	N/A	N/A	N/A	N/A
4	SW2-2	Breezeless Function (not applicable to North America models)	Breezeless ON	Default / Breezeless OFF	N/A	N/A	N/A	N/A
5	SW3	Auto Restart Setting	Do not Remember the Setting Status	Default / Remember the Setting Status	N/A	N/A	N/A	N/A
6	SW6	Heating temperature compensation	N/A	N/A	According to EEROM setting	4°C	2°C	Default / 6°C
7	SW8	Setting for Twins Connection (not applicable to North America models)			Follower Unit	Header Unit has a Follower Unit	Header Unit has a Follower Unit	Default / Header Unit has NO Follower Unit
8	Rotary Switch ENC1	Capacity selection	Default / Auto detection: ENC1=0; 6K ENC1=1; 9K ENC1=2; 12K ENC1=3; 18K ENC1=5					

NOTE: When pairing with Multi-zone outdoor units all 45MCCA one way cassettes have to be treated as 18K. All 6/9(12)/18K units will be seen as 18K at the MZU.

DRAINPIPE INSTALLATION

The drainpipe is used to drain water away from the unit. Improper installation may cause unit and property damage.

⚠ CAUTION

Unit condensate drain is NOT a gravity drain. Lift pump is in use when the unit is in cooling.

- Insulate all piping to prevent condensation, which could lead to water damage.
- If the drainpipe is bent or installed incorrectly, water may leak and cause a water-level switch malfunction.
- In HEAT mode, the outdoor unit will discharge water. Ensure that the drain hose is placed in an appropriate area to avoid water damage and slippage.
- **DO NOT** pull the drainpipe forcefully. This could disconnect it.

NOTE: The drain adapter that comes with the unit is designed to fit standard 3/4" PVC pipe (exterior diameter = 1in (25mm).

Indoor Drainpipe Installation

Install the drainpipe as illustrated in Figure 12. Connect drainpipe to the indoor unit with the drain adapter.

⚠ CAUTION

The Drain Adapter openings are different sizes. The larger size is designed to fit 3/4" PVC pipe. The smaller must be used on the condensate pump outlet..

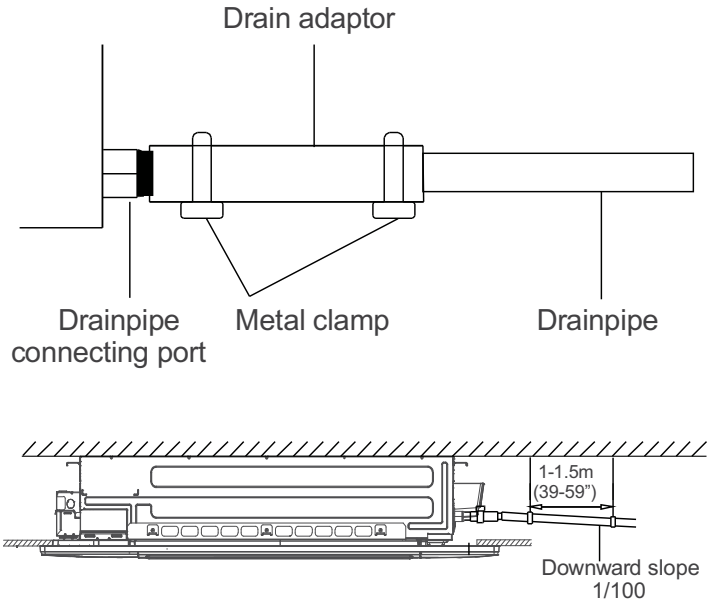

Fig. 12 —Install the Drainpipe

NOTES:

- **When using an extended drainpipe, tighten the indoor connection with an additional protection tube to prevent it from pulling loose.**
- **The drainpipe should slope downward at a gradient of at least 1/100 to prevent water from flowing back into the unit.**
- **To prevent the pipe from sagging, space hanging wires every 39-59in (1-1.5m).**
- **If the outlet of the drainpipe is higher than the body's pump joint (see Fig. 13 — on page 19), provide a lift pipe for the exhaust outlet of the indoor unit. The lift pipe must be installed no higher than 29.5in (75cm) from the ceiling board and the distance between the unit and the lift pipe must be less than 11.8in (30cm) .**
- **Incorrect installation could cause water to flow back into the unit and flood.**
- **To prevent air bubbles, keep the drain hose level or slightly tiled up (<3in/75mm).**

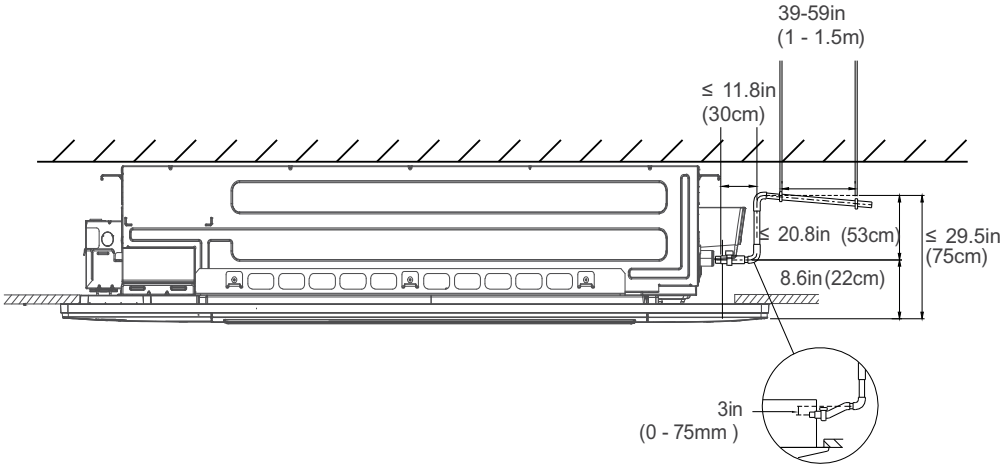

Fig. 13 —Lift Pipe Installation

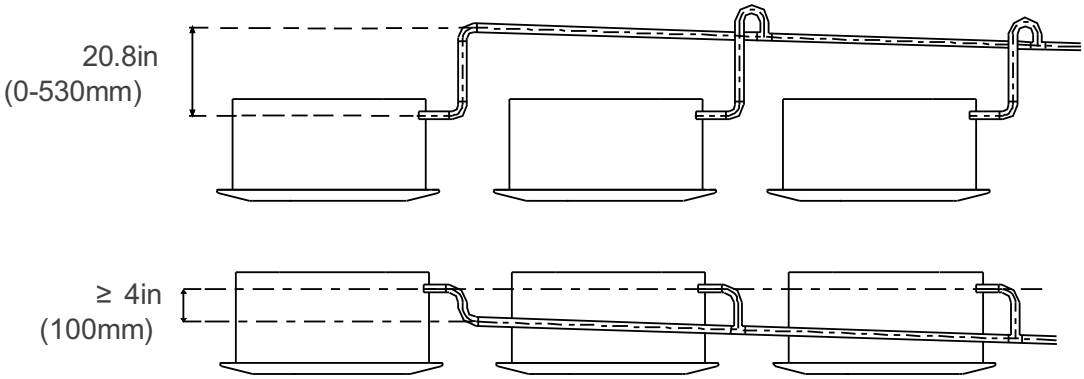

Fig. 14 —Level Drain Hose

Pass the drain hose through the wall hole. Make sure the water drains to a safe location where it will not cause water damage or a slipping hazard.

NOTE: The drainpipe outlet should be at least 1.9in (50mm) above the ground. If it touches the ground, the unit may become blocked and malfunction. If you discharge the water directly into a sewer, make sure that the drain has a U or S pipe to catch odors that might otherwise come back into the house.

Drill Wall Hole

1. Using a 2.5in (65mm) or 3.54in (90mm) core drill, drill a hole in the wall. Make sure that the hole is drilled at a slight downward angle, so that the outdoor end of the hole is lower than the indoor end by about 0.2-0.275in (5mm-7mm). This will ensure proper water drainage.
2. Place the protective wall cuff in the hole to protect the edges of the hole and help seal it when you finish the installation process.

⚠ CAUTION

When drilling the wall hole, avoid wires, plumbing, etc.

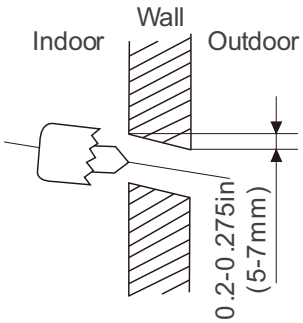

Fig. 15 —Drilling Wall Hole

NOTE: When the gas side connective pipe is Φ 5/8in (16mm) or more, the wall hole should be 3.54in (90mm).

REFRIGERANT PIPING CONNECTION

WARNING

When connecting refrigerant piping, DO NOT let substances or gases other than the specified refrigerant enter the unit. The presence of other gases or substances will lower the unit's capacity and can cause abnormally high pressure in the refrigeration cycle, which can cause explosion and injury.

Pipe Length and Elevation

The maximum length and drop height based on models are listed in Table 10:

Table 10 — Pipe Length and Elevation

Model	Length of Piping	Maximum Drop Height
6K/9K/12K	82ft/25m	49.2ft/15m
18K	98.4ft/30m	65.6ft/20m

Ensure that the length of the refrigerant pipe, the number of bends, and the drop height between the indoor and outdoor units meets the requirements shown in the table next to it.

Connection Instructions—Refrigerant Piping

CAUTION

- DO NOT install the connecting pipe until both indoor and outdoor units have been installed.
- Insulate both the gas and liquid piping to prevent condensation.

Step 1: Cut pipes

When preparing refrigerant pipes, take extra care to cut and flare them properly. This will ensure efficient operation and minimize the need for future maintenance.

- Measure the distance between the indoor and outdoor units.
- Using a pipe cutter, cut the pipe a little longer than the measured distance.
- Make sure that the pipe is cut at a perfect 90° angle.

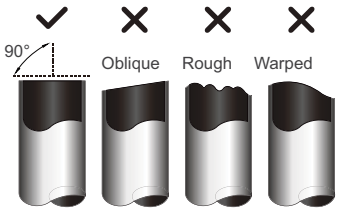

Fig. 16 —Cut Pipes

CAUTION

Be extra careful not to damage, dent, or deform the pipe while cutting. This will drastically reduce the heating

Step 2: Remove burrs

Burrs can effect the air-tight seal of refrigerant piping connection. They must be completely removed.

1. Hold the pipe at a downward angle to prevent burrs from falling into the pipe.
2. Using a reamer or deburring tool, remove all burrs from the cut section of the pipe.

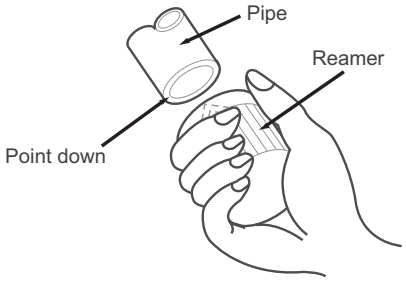

Fig. 17 —Remove Burrs with Reamer or Deburring Tool

Step 3: Flare pipe ends

Proper flaring is essential to achieve an airtight seal.

1. After removing burrs from cut pipe, seal the ends with PVC tape to prevent foreign materials from entering the pipe.
2. Sheath the pipe with insulating material.
3. Place flare nuts on both ends of pipe. Make sure they are facing in the right direction, because you cannot put them on or change their direction after flaring.

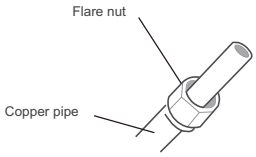

Fig. 18 —Flaring Pipe

4. Remove PVC tape from ends of pipe when ready to perform flaring work.
5. Clamp flare from on the end of the pipe. The end of the pipe must extend beyond the flare form.

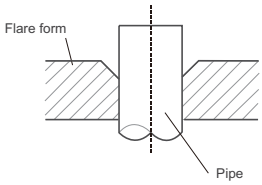

Fig. 19 —Clamp Flare from End of Pipe

6. Place flaring tool onto the form.
7. Turn the handle of the flaring tool clockwise until the pipe is fully flared.

Table 11 — Piping Extension Beyond Flare Form

Pipe Gauge	Tightening Torque	Flare Dimension (A)	Flare Shape
Ø1/4" (Ø6.35MM)	13.25 -14.75 ft-lbs (18 - 20 N.m)	0.33~0.34" (8.4~8.7mm)	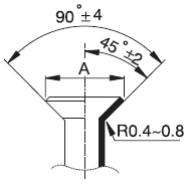
Ø3/8" (Ø9.52MM)	23.6 - 28.75 ft-lbs (32 - 39 N.m)	0.52~0.53" (13.2~13.5mm)	
Ø1/2" (Ø12.7MM)	36 - 43.5 ft-lbs (49 - 59 N.m)	0.64~0.65" (16.2~16.5mm)	

8. Remove the flaring tool and flare form, then inspect the end of the pipe for cracks and even flaring. Step 4:

Step 4: Connect pipes

- Connect the copper pipes to the indoor unit first. Then connect it to the outdoor unit.
- Connect the low-pressure pipe first. Then connect the high pressure pipe.

1. When connecting the flare nuts, apply a thin coat of refrigeration oil to the flared ends of the pipes.
2. Align the center of the two pipes that you are connecting.

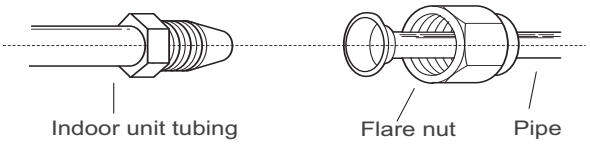

Fig. 20 —Align Center of Pipes to Connect

3. Tighten the flare nut snugly by hand.
4. Using a wrench, grip the nut on the unit tubing.
5. While firmly gripping the nut, use a torque wrench to tighten the flare nut according to the torque values in Table 11.

NOTE: Use both a spanner and a torque wrench when connecting or disconnecting pipes to/from the unit.

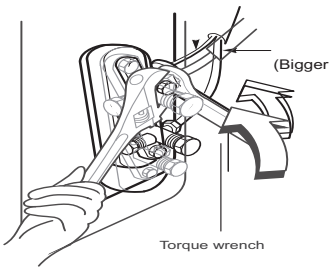

Fig. 21 —Use Wrench and Torque Wrench to Connect or Disconnect Pipes

CAUTION

Ensure to wrap insulation around the piping. Direct contact with the bare piping may result in burns or frostbite.
Make sure the pipe is properly connected. Over tightening may damage the bell mouth and under tightening may lead to leakage.

NOTE: Carefully bend the tubing in the middle according to the diagram below. DO NOT bend tubing more than 90° or more than 3 times.

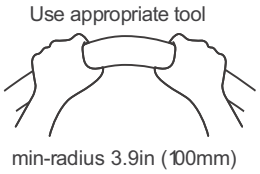

Fig. 22 —Bend Tubing

6. After connecting the copper pipes to the indoor unit, wrap the power cable, signal cable and the piping together with binding tape.

NOTE: DO NOT intertwine signal cable with other wires. While bundling these items together. DO NOT intertwine or cross the signal cable with any other wiring.

7. Thread this pipeline through the wall and connect it to the outdoor unit.
8. Insulate all the piping including the valves of the outdoor unit.
9. Fix the water receiver (supplied in Accessories box) to the indoor unit with a screw.

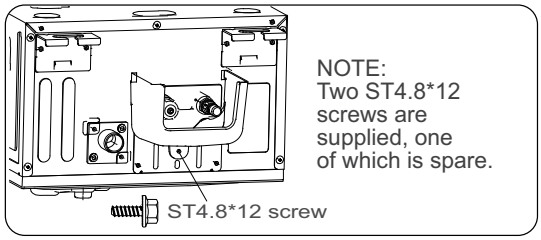

Fig. 23 —Attach Water Receiver to Indoor Unit

10. Open the stop valves of the outdoor unit to start the flow of the refrigerant between the indoor and outdoor unit.

CAUTION

Ensure there is no refrigerant leak after completing the installation work. If there is a refrigerant leak, ventilate the area immediately and evacuate the system.

For units with refrigerant sensors, the minimum airflow of the indoor unit is found in Table 12.

Table 12 — Compatibility with Single Zone Outdoors

Capacity	Indoor	Outdoor
06K	D5FSOAH06XAK	D5CSHAH06AAK
09K/12K	D5FSOAH12XAK	D5CSHAH09AAK
		D5CSHAH12AAK
		D5CSRAH09AAK
		D5CSRAH12AAK
18K	D5FSOAH18XAK	D5CSHAH18AAK
		D5CSRAH18AAK

Step 5: Panel Installation - Ceiling Prep

Use the following steps to prepare the ceiling.

1. Drill a 16.93”x51.18” (430 mm x 1300 mm) hole into the ceiling based on the layout of the installation board. The center of the ceiling opening should match the center of the body of the indoor unit.

NOTE: To prevent vibrations, reinforce the ceiling where necessary.

2. Once the ceiling is cut, remove the installation board.

Step 6: Panel Installation

1. Press the circular position to open the two screw covers, then remove the two screws.

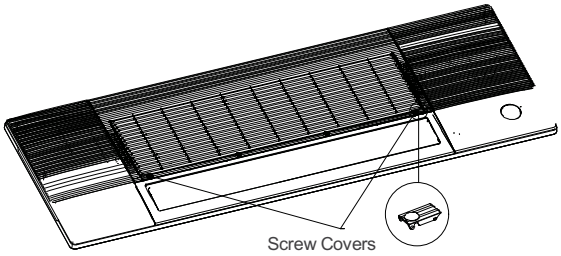

Fig. 24 —Panel Installation

2. Hold and open the air grille, then push both latches to the middle to unlock the air grille.

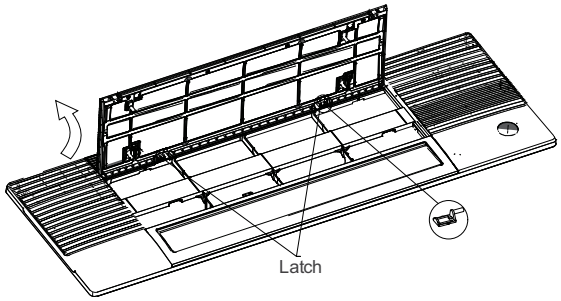

Fig. 25 —Panel Installation

3. Remove the panel grille from the panel, secure the cassette panel to the one-way cassette with the two plastic straps.

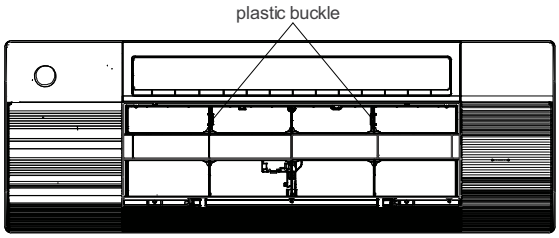

Fig. 26 —Panel Installation

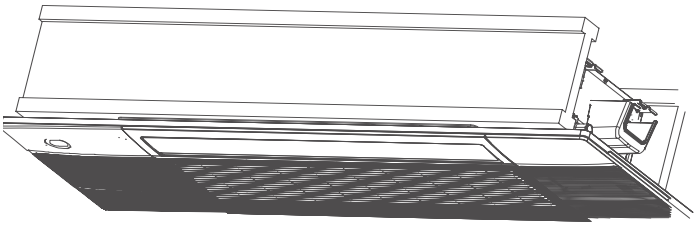

Fig. 27 —Panel Installation

4. Manually rotate the louver, secure the panel to the cassette with 3×M4*22 screws and a ST3.9*16 screw.

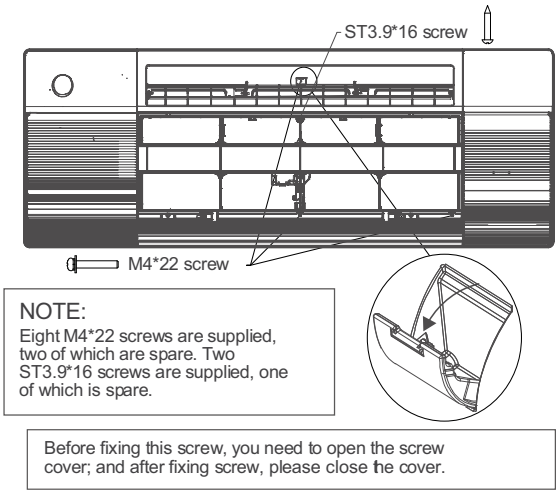

Fig. 28 —Panel Installation

5. Open the two covers on both sides of the panel, secure the panel to the cassette with 3× M4*22 screws.

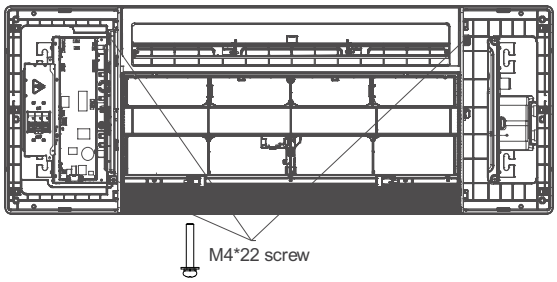

Fig. 29 —Panel Installation

6. Connect the display board to the main control board, up to four wires are required to make the connection.

NOTE: The corresponding colors are corresponding pins are connected to each other.

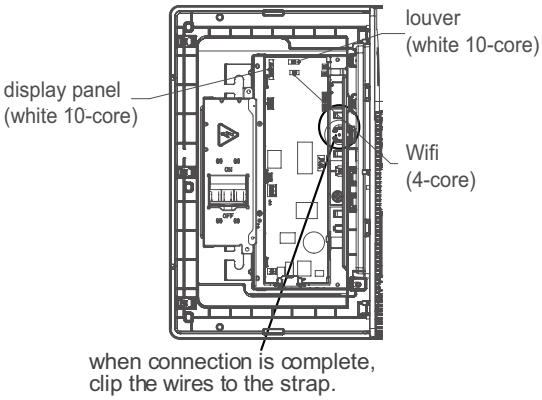

Fig. 30 —Panel Installation

7. Install the control box cover and set the disconnect switch to ON, then close the two plastic covers on both sides of the panel.

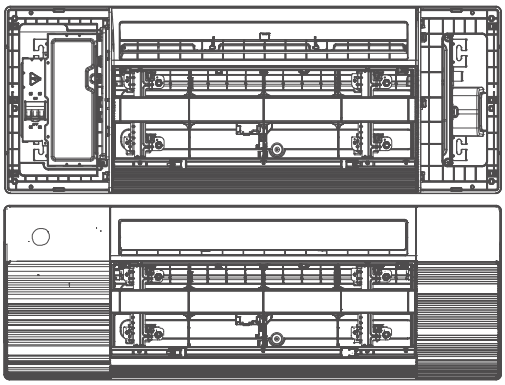

Fig. 31 —Panel Installation

8. Re-install the air grille by pushing the latches to lock it and secure the two screws, then close the two screw covers.

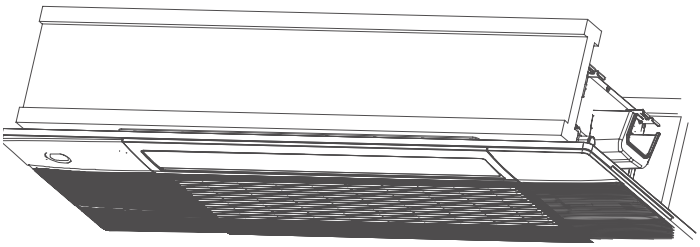

Fig. 32 —Panel Installation

WIRING

WIRING PRECAUTIONS

WARNING

Before performing any electrical work, read these warnings.

- All wiring must comply with local and national electrical codes, regulations and must be installed by a licensed electrician.
- All electrical connections must be made according to the Electrical Connection Diagram located on the panels of the indoor and outdoor units.
- If there is a serious safety issue with the power supply, stop work immediately. Explain your reasoning to the client, and refuse to install the unit until the safety issue is properly resolved.
- Power voltage should be within 90-110% of rated voltage. Insufficient power supply can cause malfunction, electrical shock, or fire.
- Installation of an external surge suppressor at the outdoor disconnect is recommended.
- If connecting power to fixed wiring, a switch or circuit breaker that disconnects all poles and has a contact separation of at least 1/8in (3mm) must be incorporated in the fixed wiring. The qualified technician must use an approved circuit breaker or switch.
- Only connect the unit to an individual branch circuit. Do not connect another appliance to that outlet.
- Make sure to properly ground the unit.
- Every wire must be firmly connected. Loose wiring can cause the terminal to overheat, resulting in product malfunction and possible fire.
- Do not let wires touch or rest against refrigerant tubing, the compressor, or any moving parts within the unit.
- If the unit has an auxiliary electric heater, it must be installed at least 40in (1 meter) away from any combustible materials.
- To avoid getting an electric shock, never touch the electrical components soon after the power supply has been turned off. After turning off the power, always wait 10 minutes or more before you touch the electrical components.
- Make sure that you do not cross your electrical wiring with your signal wiring. This may cause distortion, interference or possibly damage to circuit boards.
- No other equipment should be connected to the same power circuit.
- Connect the outdoor wires before connecting the indoor wires.

WARNING

Before performing and electrical or wiring work, turn off the main power to the system.

NOTE ON CIRCUIT BREAKER: The appliance should be wired according to NEC and CEC requirements. Always follow local codes.

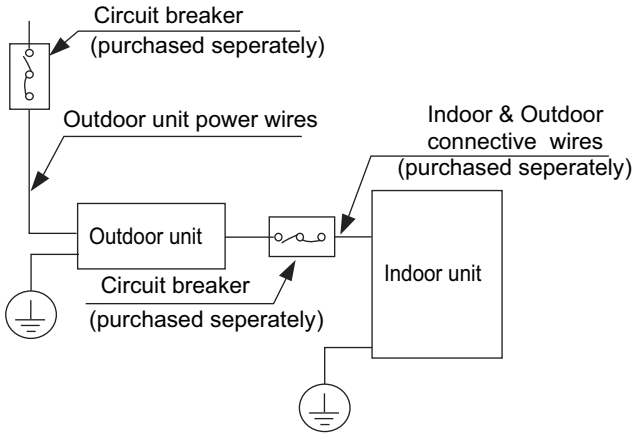

Fig. 33 —Circuit Breaker

NOTE: The images are for explanation purpose only. Your machine may be slightly different.

INDOOR UNIT WIRING

1. Prepare the cable for connection
   a. Using wire strippers, strip the rubber jacket from both ends of the signal cable to reveal about 5.9in (150mm) of the wire.
   b. Strip the insulation from the ends of the wires.
   c. Using a wire crimper, crimp the u-lugs to the ends of the wires.
2. Open the front panel of the indoor unit. Using a screwdriver, remove the cover of the electric control box on your indoor unit.
3. Thread the power cable and the signal cable through the wire outlet.
4. Connect the u-lugs to the terminals.
   Match the wire colors/labels with the labels on the terminal block. Firmly screw the u-lug of each wire to its corresponding terminal. Refer to the Serial Number and Wiring Diagram located on the cover of the electric control box.

CAUTION

- While connecting the wires, strictly follow the wiring diagram.
- The refrigerant circuit can become very hot. Keep the interconnection cable away from the copper tube.

5. Clamp down the cable with the cable clamp.The cable must not be loose or pull on the u-lugs.
6. Reattach the electric box cover.

WIRELESS REMOTE CONTROL HOLDER INSTALLATION

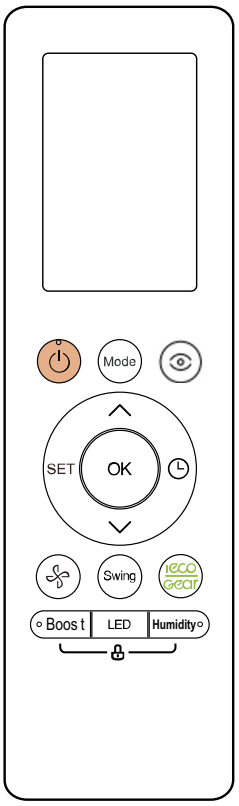

Fig. 34 —Remote Control Functions RG10L5

1. Use the two screws supplied with the wireless remote control to attach the mounting bracket to the wall in a location selected by the customer and within operating range.
2. Install the batteries in the remote control.
3. Place the remote control into the remote control mounting bracket.

NOTE: For remote control operation, refer to the remote control's owners manual.

OPTIONAL WIRED WALL-MOUNTED REMOTE CONTROL INSTALLATION

NOTE: For setup instructions, refer to the Wired Controller Installation Manual (KSACN0701AAA).

SYSTEM CHECKS

1. Conceal the tubing where possible.
2. Ensure the drain tube slopes downward along its entire length.
3. Ensure all tubing and connections are properly insulated.
4. Fasten tubes to the outside wall, when possible.
5. Seal the hole through which the cables and tubing pass.

INDOOR UNIT

1. Do all remote control buttons function properly?
2. Do the display panel lights work properly?
3. Does the air deflection louver function properly?
4. Does the drain work?

Explain Following Items To Customer (with the aid of the Owner's Manual):

1. How to turn the air conditioner on and off; selecting COOLING, HEATING and other operating modes; setting a desired temperature; setting the timer to automatically start and stop the air conditioner operation; and all other features of the remote control and display panel.
2. How to remove and clean the air filter.
3. How to set the air deflection louver.
4. Explain care and maintenance.
5. Present the owner's manual and installation instructions to customer.

TEST RUN

⚠ CAUTION

Failure to perform the test run may result in unit damage, property damage, or personal injury.

Before test run

A test run must be performed after the entire system has been completely installed. Confirm the following points before performing the test:

- Indoor and outdoor units are properly installed.
- Piping and wiring are properly connected.
- No obstacles near the inlet and outlet of the unit that might cause poor performance or product malfunction.
- Refrigeration system does not leak.
- Drainage system is unimpeded and draining to a safe location.
- Heating insulation is properly installed.
- Grounding wires are properly connected.
- Length of the piping and additional refrigerant capacity have been recorded.
- Power voltage is the correct voltage for the unit.

Test Run Instructions

1. Open both the liquid and gas stop valves.
2. Turn on the main power switch and allow the unit to warm up.
3. Set the unit to COOL mode.
4. For the Indoor Unit:
   a. Double check to see if the room temperature is being registered correctly.
   b. Ensure the manual buttons on the indoor unit works properly.
   c. Check to see that the drainage system is unimpeded and draining smoothly.
   d. Ensure there is no vibration or abnormal noise during operation.
5. For the Outdoor Unit
   a. Check to see if the refrigeration system is leaking.
   b. Make sure there is no vibration or abnormal noise during operation.
   c. Ensure the wind, noise, and water generated by the unit do not disturb your neighbors or pose a safety hazard.

NOTE: If the unit malfunctions or does not operate according to your expectations, please refer to the Troubleshooting section of the Owner's Manual before calling customer service.

Water Discharge Test

- Before the test, make sure that the water discharge pipeline is smooth, and check that each connection is sealed properly.
- Conduct the water discharge test in the new room before the ceiling is paved.

1. Connect the power supply, and set the unit to operate in the cool mode. Check the running sound of the drainage pump.
2. Keep cool mode running at least 10 min.
3. Stop the unit. Wait for three minutes, and then check if there is anything unusual. If the water discharge piping layout is not correct, the excessive water flow will cause the water level error and "EHOE (EE)" error code will be displayed on the display panel. There may even be water overflowing from the water pan.
4. Continue to add water until the alarm for excessive water levels is triggered. Check if the drainage pump drains water immediately. After three minutes, if the water level does not fall below the warning level, the unit will shut down. At this time, you need to turn off the power supply, and drain away the accumulated water before you can turn on the unit normally. Turn o, the power supply, remove the water manually using the drainage plug, and put the test cap back to the original place.

⚠ CAUTION

The drainage plug at the bottom of the unit body is used to discharge accumulated water from the drain pan when the unit malfunctions. When the unit is operating normally, make sure the drainage plug is properly plugged to prevent water from leaking.

PACKING AND UNPACKING THE UNIT

Instructions for packing and unpacking the unit

Unpacking: Indoor unit:

1. Cut the sealing tape on the carton with a knife, one cut on the left, one cut in the middle and one cut on the right.
2. Use the vice to take out the sealing nails on the top of the carton.
3. Open the carton.
4. Take out the middle support plate if it is included.
5. Take out the accessory package, and take out the connecting wire if it is included.
6. Lift the machine out of the carton and lay it flat.
7. Remove the left and right package foam or the upper and lower packaging foam, untie the packaging bag.

Unpacking: Outdoor unit:

1. Cut the packing belt.
2. Take the unit out of the carton.
3. Remove the foam from the unit.
4. Remove the packaging bag from the unit.

Packing: Indoor unit:

1. Put the indoor unit into the packing bag.
2. Attach the left and right package foam or the upper and lower packaging foam to the unit.
3. Put the unit into the carton, then put accessory package in.
4. Close the carton and seal it with the tape.
5. Using the packing belt if necessary.

Packing: Outdoor unit:

1. Put the outdoor unit into the packing bag.
2. Put the bottom foam into the box.
3. Put the unit into the carton, then put the upper packaging foam on the unit.
4. Close the carton and seal it with the tape.
5. Using the packing belt if necessary.

NOTE: Keep all packaging items if you may need in the future.

TROUBLESHOOTING

For ease of service, the systems are equipped with diagnostic code display LEDs on both the indoor and outdoor units. The indoor diagnostic display is a combination of flashing LEDs on the display panel or the front of the unit.

Some indoor units display error codes specifying failure modes in the outdoor units. If possible, always check the diagnostic codes displayed on the indoor unit first.

The diagnostic codes displayed in the indoor and outdoor units are listed in Table 13.

INDOOR UNIT DIAGNOSTIC GUIDES

Table 13 — Error Codes

Display	Malfunction and Protection Indication
EC07	ODU Fan Speed Out of Control
EC51	ODU EEPROM Parameter Error
EC52	ODU Coil Temperature Sensor(T3) error
EC53	ODU Ambient Temperature Sensor (T4) Error
EC54	COMP. Discharge Temperature Sensor (TP) Error
EC56	IDU Coil Temperature Sensor (T2B) Error
ECC1	Other IDU Refrigerant Sensor Detects Leakage (Multi-zone)*
EH00	IDU EEPROM Malfunction
EH03	IDU Fan Speed Out of Control
EH0A	IDU EEPROM Parameter Error
EH0E	Water Level Alarm Malfunction
EH12	Main Unit or Secondary Units Malfunction
EH3A	External Fan DC bus voltage is too low protection
EH3b	External Fan DC bus voltage is too high fault
EH60	IDU Room Temperature (T1) Error
EH61	IDU Coil Temperature Sensor (T2) Error
EHba	Communication Error between the indoor unit and the external fan module
EHC1	Refrigerant Sensor Detects Leakage
EHC2	Refrigerant Sensor is out of range and a leak is detected
EHC3	Refrigerant Sensor is out of range*
EL01	IDU and ODU Communication Error
EL0C	System lacks refrigerant
EL11	Communication Malfunction between the main and secondary units
FH07	IDU lift panel communication failure/IDU opening and closing failure
FHCC	Refrigerant Sensor Error*
PC00	ODU IPM Module Protection
PC01	ODU Voltage Protection
PC02	Compressor To (or IPM Module Protection
PC03	Pressure Protection (Low or High Pressure)
PC04	Inverter Compressor Drive Error
PC0L	Low Ambient Temperate Protection
NOTE: The digital tube will display **FC** in the **FORCED COOLING** mode. **FC is NOT an error code.** *Applicable to the units with refrigerant sensors only.	

Table 14 — Refrigerant Leak Detection Error Codes

EHC1	Refrigerant Sensor Detects Leakage
EHC2	Refrigerant Sensor is out of range and a leak is detected

If **you receive one of the codes in Table 14, call a technician as soon as possible. No need to panic, the unit goes into TURBO mode until the error code clears. There is a "beeping" noise coming from the indoor unit, which is normal in this case.**

For additional diagnostic information, refer to the Service Manual..

DUCTLESS START-UP CHECKLIST - Single Zone

Installation Data:

Site Address:_____

City:_____ State:_____ Zip Code:_____

Installing Contractor:_____ Contractor Contact #: ( ) _____-_____

Job Name:_____ Start-up Date:_____

Distributor:_____

System Details

UNITS	MODEL NO.	SERIAL NO.	CONTROLLER
OUTDOOR UNIT			
INDOOR UNIT A			

Are the outdoor unit and indoor unit compatible? YES:_____ NO:_____

Wiring Electrical

Wire Size and Type Used? AWG:_____ TYPE:_____

Are there any breaks, splices, wire nuts or butt connectors between the outdoor unit and the indoor unit? YES:_____ NO:_____

Was the wiring from the outdoor unit port to the correct indoor unit verified? YES:_____ NO:_____

REMARKS:_____

_____

Voltage Check

Wiring: Single Zone

Outdoor Unit Disconnect	1(L1):GND		Outdoor Unit Terminal Block	1(L1):GND		NOTES:_____
	2(L2):GND			2(L2):GND		
	1(L1):L2(2)			1(L1):2(L2)		
Indoor Unit Voltage Check @ Outdoor Unit	1(L1):GND		Indoor Unit Voltage Check @ Indoor Unit	1(L1):GND		NOTES:_____
	2(L2):GND			2(L2):GND		
	1(L1):2(L2)			1(L1):2(L2)		
	2(L2):3(S)			2(L2):3(S)		

Outdoor Unit Disconnect	1(L1):GND		Outdoor Unit Terminal Block	1(L1):GND		NOTES:_____
	2(L2):GND			2(L2):GND		
	1(L1):L2(2)			1(L1):2(L2)		
Indoor Unit Voltage Check @ Outdoor Unit	1(L1):GND		Indoor Unit Voltage Check @ Indoor Unit	1(L1):GND		NOTES:_____
	2(L2):GND			2(L2):GND		
	1(L1):2(L2)			1(L1):2(L2)		
	2(L2):3(S)			2(L2):3(S)		

DUCTLESS START-UP CHECKLIST (CONT)

Piping

Leak Check:

System held 500 psig (max. 550psi) for a minimum of 30 minutes using dry nitrogen. YES:_____ NO:_____

Evacuation Method:

Was the Triple Evacuation Method used as outlined in the installation manual? YES:_____ NO:_____
Was the Deep Vacuum Method used as outlined in the installation manual? YES:_____NO:_____
Did the System Hold 500 microns for 1 hour? YES:_____NO:_____
Does the line set match the diameter of the evaporator connections? YES:_____NO:_____
For Conventional Fan Coils, does the line set match the outdoor unit size? YES:_____NO:_____

Single Zone Piping:

Has the liquid pipe length been measured and the additional charge calculated? Size:_____ Length:_____ Charge:_____

NOTES:

Final Charge Amount MUST be Recorded

PORT	LIQUID SIZE		SUCTION SIZE		LENGTH	CHARGE	NOTES:_____
A							

Performance Check

For 1:1 Single Zone Systems: Adjust the set-point to create an operational call for the desired testing operation. Allow the system to run for a minimum of 10 min. and record the following details:

(Operational data recorded on applicable heads with the wireless remote controller's Point Check function)

UNIT	SET-POINT	MODE	T1	T2	T3	T4	Tb	Tp	Th	LA/Lr
A										

NOTE:

- **T1 - Ambient Space Temperature Sensor**
- **T2 - IDU Coil Temperature Sensor**
- **T3 - Outdoor Coil Temperature Sensor**
- **T4 - Outdoor Ambient Temperature**
- **Tb - Suction Line Temperature @PMV**
- **Tp - Discharge Temperature Sensor**
- **Th - IPM Board Temperature**
- **LA/Lr - PMV Temperature**

Error Codes

Were there any error codes present at start-up? YES:_____ NO:_____

Indoor Unit Error Code:		Notes:
Outoor Unit Error Code:		
Wall Controller:		
24V Interface:		

Comments:

_____
_____
_____

© 2026 Carrier. All rights reserved.
Edition Date: 06/26 **Catalog No: D5FSOA-02SI**

Replaces: D5FSOAH-01SI

Manufacturer reserves the right to change, at any time, specifications and designs without notice and without obligations.