D5MAHA
HIGH WALL DUCTLESS SYSTEM
SIZES 06 TO 36

# Installation Instructions

**Fig. 1 — Sizes 06K-36K**

**NOTES: Read the entire instruction manual before starting the installation. Images are for illustration purposes only. Actual models may differ slightly.**

## TABLE OF CONTENTS


PAGE
SAFETY CONSIDERATIONS....2
ACCESSORIES....7
MODEL NUMBERS....8
CAPACITY....8
DIMENSIONS....9
ELECTRICAL DATA....10
INSTALLATION OVERVIEW....10
INSTALLATION SUMMARY....11
INDOOR UNIT INSTALLATION....14
Step 1: Select Installation Location....14
Step 2: Drill Wall Hole for Connecting Piping....15
Step 3: Install Refrigerant Pipe & Drain Hose....16
Step 4: Electrical Work Preparation....19
Step 5: Wrap Piping and Cables....21
Step 6: Mount the Indoor Unit....22
WIRELESS REMOTE CONTROLLER INSTALLATION....24
OPTIONAL WIRED WALL-MOUNTED REMOTE CONTROL INSTALLATION....24
TROUBLESHOOTING....25
DUCTLESS START-UP CHECKLIST - Single Zone....28

# SAFETY CONSIDERATIONS

Installing, starting up, and servicing air- conditioning equipment can be hazardous due to system pressures, electrical components, and equipment location (roofs, elevated structures, etc.).
Only trained, qualified installers and service mechanics should install, start- up, and service this equipment.

Untrained personnel can perform basic maintenance functions such as coil cleaning. All other operations should be performed by trained service personnel only.

When working on the equipment, observe the precautions in the literature and on tags, stickers, and labels attached to the equipment.

Follow all safety codes.Wear safety glasses and work gloves. Keep a quenching cloth and a fire extinguisher nearby when brazing. Use care in handling, rigging, and setting bulky equipment.
Read these instructions thoroughly and follow all warnings or cautions included in the literature and attached to the unit. Consult local building codes and National Electrical Code (NEC) for special requirements.
Recognize safety information.

## This is the safety - alert symbol ⚠.

When you see this symbol on the unit and in instructions or manuals, be alert to the potential for personal injury. Understand these signal words: **DANGER**, **WARNING**, and **CAUTION**. These words are used with the safety- alert symbol.

**DANGER** identifies the most serious hazards which will result in severe personal injury or death.

**WARNING** signifies hazards which could result in personal injury or death.

**CAUTION** is used to identify unsafe practices which may result in minor personal injury or product and property damage.

**NOTE is used to highlight suggestions which will result in enhanced installation, reliability, or operation.**

The following symbols may be seen on the unit.

**Table 1 — Symbols displayed on the indoor unit or outdoor unit**

| | | |
|---|---|---|
| A2L | WARNING | This symbol shows that this appliance used a flammable refrigerant. If the refrigerant is leaked and exposed to an external ignition source, there is a risk of fire. |
| | CAUTION | This symbol shows that the operation manual should be read carefully. |
| | CAUTION | This symbol shows that a service personnel should be handling this equipment with reference to the installation manual. |
| | CAUTION | |
| | CAUTION | This symbol shows that information is available such as the operating manual or installation manual. |

R-454B

Refrigerant Safety Group A2L

R-454B

WARNING – Risk of Fire due to Flammable Refrigerant Used. Follow Handling Instructions Carefully in Compliance with National Regulations

## ⚠ WARNING

**ELECTRICAL SHOCK HAZARD**
Failure to follow this warning could result in personal injury or death.

Before installing, modifying, or servicing system, the main electrical disconnect switch must be in the OFF position. There may be more than 1 disconnect switch. Lock out and tag switch with a suitable warning label.

## ⚠ WARNING

**EXPLOSION HAZARD**
Failure to follow this warning could result in death, serious personal injury, and/or property damage.

Never use air or gases containing oxygen for leak testing or operating refrigerant compressors. Pressurized mixtures of air or gases containing oxygen can lead to an explosion.

## ⚠ CAUTION

**EQUIPMENT DAMAGE HAZARD**

Failure to follow this caution may result in equipment damage or improper operation.

Do not bury more than 36 in. (914 mm) of refrigerant pipe in the ground. If any section of pipe is buried, there must be a 6 in. (152 mm) vertical rise to the valve connections on the outdoor units. If more than the recommended length is buried, refrigerant may migrate to the cooler buried section during extended periods of system shutdown. This causes refrigerant slugging and could possibly damage the compressor at start-up.

## ⚠ WARNING

This appliance is not intended for use by persons (including children) with reduced physical, sensory or mental capabilities, or lack of experience and knowledge, unless they have been given supervision or instruction concerning use of the appliance by a person responsible for their safety. Children should be supervised to ensure that they do not play with the appliance.

**Manufacturer reserves the right to change, at any time, specifications and designs without notice and without obligations.**

## ⚠ WARNING

**FOR FLAMMABLE REFRIGERANTS**

Do not use means to accelerate the defrosting process or to clean, other than those recommended by the manufacturer.

The appliance shall be stored in a room without continuously operating ignition sources (for example: open flames, an operating gas appliance or an operating electric heater).

Do not pierce or burn.

Be aware that refrigerants may not contain an odor.

## ⚠ WARNING

Only use the specified wire. If the wire is damaged, it must be replaced by the manufacturer, its service agent or similarly qualified persons in order to avoid a hazard. The product must be properly grounded at the time of installation, or electric shock may occur.

For all electrical work, follow all local and national wiring standards, regulations, and the Installation Manual. Connect the cables tightly, and clamp them securely to prevent external forces from damaging the terminal. Improper electrical connections can overheat and cause fire, and may also cause shock. All electrical connections must be made according to the Electrical Connection Diagram located on the panels of the indoor and outdoor units.

All wiring must be properly arranged to ensure that the control board cover can close properly. If the control board cover is not closed properly, it can lead to corrosion and cause the connection points on the terminal to heat up, catch fire, or cause electrical shock.

Disconnection must be incorporated in the fixed wiring in accordance with NEC, CSA and Local Codes. **Do not** share the electrical outlet with other appliances. Improper or insufficient power supply can cause fire or electric shock.

If connecting power to fixed wiring, an all-pole disconnection device which has at least 3mm clearances in all poles, and have a leakage current that may exceed 10mA, the residual current device (RCD) having a rated residual operating current not exceeding 30mA, and disconnection must be incorporated in the fixed wiring in accordance with NEC, CSA and Local Codes.

## ⚠ WARNING

**PERSONAL INJURY AND PROPERTY DAMAGE HAZARD**

For continued performance, reliability, and safety, the only approved accessories and replacement parts are those specified by the equipment manufacturer. The use of non-manufacturer approved parts and accessories could invalidate the equipment limited warranty and result in a fire risk, equipment malfunction, and failure.

Review the manufacturer's instructions and replacement parts catalogs available from your equipment supplier.

## ⚠ WARNING

Turn off the air conditioner and disconnect the power before performing any installation or repairing. Failure to do so can cause electric shock.

Installation must be performed by an authorized dealer or specialist. Defective installation can cause water leakage, electrical shock, or fire. Installation must be performed according to the installation instructions.

Improper installation can cause water leakage, electrical shock, or fire. Contact an authorized service technician for repair or maintenance of this unit. This appliance shall be installed in accordance with national wiring regulations.

Only use the included accessories, parts, and specified parts for installation. Using non-standard parts can cause water leakage, electrical shock, fire, and can cause the unit to fail.

Install the unit in a firm location that can support the unit's weight. If the chosen location cannot support the unit's weight, or the installation is not done properly, the unit may drop and cause serious injury and damage. Install drainage piping according to the instructions in this manual. Improper drainage may cause water damage to your home and property. For units that have an auxiliary electric heater, do not install the unit within 3 feet (1 meter) of any combustible materials.

If combustible gas accumulates around the unit, it may cause fire.

Do not turn on the power until all work has been completed.

When moving or relocating the air conditioner, consult experienced service technicians for disconnection and re-installation of the unit.

Read the information for details in "indoor unit installation" and "outdoor unit installation" sections.

**NOTE: The air conditioner's circuit board (PCB) is designed with a fuse to provide overcurrent protection. The specifications of the fuse are printed on the circuit board, for example: T3.15AL/250VAC, T5AL/250VAC, T3.15A/250VAC, T5A/250VAC, T20A/250VAC, T30A/250VAC,etc.**

**NOTE: Only a blast-proof ceramic fuse can be used.**

## Table 2 — A (min)

| | | HINST: HEIGHT ABOVE FLOOR LEVEL TO CENTER OF INDOOR UNIT / FEET (METERS) | | | | | |
|---|---|---|---|---|---|---|---|
| MC OR MREL REFRIGERANT CHARGE AMOUNT POUNDS (KILOGRAMS) | | ≤ 7.2 (2.2) | 7.5 (2.3) | 7.9 (2.4) | 8.5 (2.6) | 9.2 (2.8) | 9.8 (3.0) |
| | ≤ 3.91 (1.776) | 12 (1.10) | | | | | |
| | 4.0 (1.8) | 60 (5.53) | 57 (5.29) | 55 (5.07) | 50 (4.68) | 47 (4.34) | 44 (4.05) |
| | 4.4 (2.0) | 66 (6.14) | 63 (5.88) | 61 (5.63) | 56 (5.2) | 52 (4.83) | 48 (4.5) |
| | 4.9 (2.2) | 73 (6.76) | 70 (6.46) | 67 (6.19) | 62 (5.72) | 57 (5.31) | 53 (4.95) |
| | 5.3 (2.4) | 79 (7.37) | 76 (7.05) | 73 (6.76) | 67 (6.24) | 62 (5.79) | 58 (5.41) |
| | 5.7 (2.6) | 86 (7.99) | 82 (7.64) | 79 (7.32) | 73 (6.76) | 68 (6.27) | 63 (5.86) |
| | 6.2 (2.8) | 93 (8.6) | 89 (8.23) | 85 (7.88) | 78 (7.28) | 73 (6.76) | 68 (6.31) |
| | 6.6 (3.0) | 99 (9.21) | 95 (8.81) | 91 (8.45) | 84 (7.8) | 78 (7.24) | 73 (6.76) |
| | 7.1 (3.2) | 106 (9.83) | 101 (9.4) | 97 (9.01) | 90 (8.32) | 83 (7.72) | 78 (7.21) |
| | 7.5 (3.4) | 112 (10.44) | 108 (9.99) | 103 (9.57) | 95 (8.84) | 88 (8.2) | 82 (7.66) |
| | 7.9 (3.6) | 119 (11.06) | 114 (10.58) | 109 (10.14) | 101 (9.36) | 94 (8.69) | 87 (8.11) |
| | 8.4 (3.8) | 126 (11.67) | 120 (11.16) | 115 (10.7) | 106 (9.88) | 99 (9.17) | 92 (8.56) |
| | 8.8 (4.0) | 132 (12.29) | 126 (11.75) | 121 (11.26) | 112 (10.4) | 104 (9.65) | 97 (9.01) |
| | 9.3 (4.2) | 139 (12.9) | 133 (12.34) | 127 (11.82) | 117 (10.91) | 109 (10.14) | 102 (9.46) |
| | 9.7 (4.4) | 145 (13.51) | 139 (12.93) | 133 (12.39) | 123 (11.43) | 114 (10.62) | 107 (9.91) |
| | 10.1 (4.6) | 152 (14.13) | 145 (13.51) | 139 (12.95) | 129 (11.95) | 119 (11.1) | 112 (10.36) |
| | 10.6 (4.8) | 159 (14.74) | 152 (14.1) | 145 (13.51) | 134 (12.47) | 125 (11.58) | 116 (10.81) |
| | 11.0 (5.0) | 165 (15.36) | 158 (14.69) | 152 (14.08) | 140 (12.99) | 130 (12.07) | 121 (11.26) |
| **AREA FORMULA** | **Amin** is the required minimum room area in square feet/square meters<br>**mc** is the actual refrigerant charge in the system in lbs/kg<br>**mREL** is the refrigerant releasable charge in lbs/kg<br>**hinst** is the height of the center of the appliance relative to the floor of the room after installation.<br>**WARNING**: The minimum room area or minimum room area of conditioned space is based on a releasable charge or total system refrigerant charge. | | | | | | |

**For R454B refrigerant charge amount and minimum room area:**

**The machine you purchased may be one of the types in the table below. The indoor and outdoor units are designed to be used together. Check the machine you purchased.The indoor unit should be installed at least 6.0ft /1.8m above from the floor, the height of the room cannot be less than 7.3ft /2.2m, and the minimum room area of operating or storage should be as specified in Table 2.**

## Table 3 — Airflow Information

| MODEL | 9K | 12K | 18K | 24K | 36K | 48K |
|---|---|---|---|---|---|---|
| NOMINAL AIR VOLUME CFM ($M^3$/H) | 353 (600) | 418 (710) | 448 (760) | 765 (1300) | 1042 (1770) | 1236 (2100) |

1. **Installation (where refrigerant pipes are allowed)**

   Any person who is involved with working on or breaking into a refrigerant circuit should hold a current valid certificate from an industry-accredited assessment authority, which authorizes their competence to handle refrigerants safely in accordance with an industry recognized assessment specification.
   Maintenance and repair requiring the assistance of other skilled personnel shall be carried out under the supervision of the person competent in the use of flammable refrigerants.
   The installation of pipe-work shall be kept to a minimum.
   Pipe-work shall be protected from physical damage.
   Where refrigerant pipes shall be compliance with national gas regulations. That mechanical connections shall be accessible for maintenance purposes.
   Be more careful that foreign matter (oil, water, etc.) does not enter the piping. When storing the piping, securely seal the opening by pinching, taping, etc. All working procedure that affects safety means shall only be carried by competent persons.
   Appliance shall be stored in a well ventilated area where the room size corresponds to the room area as specific for operation.
   Joints shall be tested with detection equipment with a capability of 1/8 oz (5g)/year of refrigerant or better, with the equipment in standstill and under operation or under a pressure of at least these standstill or operation conditions after installation. In cases that require mechanical ventilation, ventilation openings shall be kept clear of obstruction.

   **LEAK DETECTION SYSTEM** installed. Unit must be powered except for service.For the unit with refrigerant sensor, when the refrigerant sensor detects refrigerant leakage, the indoor unit displays a error code and emit a buzzing sound, the compressor of outdoor unit immediately stops, and the indoor fan starts running. The service life of the refrigerant sensor is 15 years. When the refrigerant sensor malfunctions, the indoor unit displays the error code **FHCC**. **Refer to the error code table in the unit's service manual for details.** The refrigerant sensor can not be repaired and can only be replaced by the manufacturer. It shall only be replaced with the sensor specified by the manufacturer.

2. Because a **FLAMMABLE REFRIGERANT** is used, the requirements for installation space of appliance and/or ventilation requirements are determined according to:

   - the refrigerant charge used in the appliance,
   - the installation location,
   - the type of ventilation of the location or of the appliance.
   - piping material, pipe routing, and installation shall include protection from physical damage in operation and service, and be in compliance with national and local codes and standards, such as ASHRAE 15, IAPMO Uniform Mechanical Code, ICC International Mechanical Code, or CSA B52. All field joints shall be accessible for inspection prior to being covered or enclosed.
   - that protection devices, piping, and fittings shall be protected as far as possible against adverse environmental effects, for example, the danger of water collecting and freezing in relief pipes or the accumulation of dirt and debris;
   - that piping in refrigeration systems is designed and installed to minimize the likelihood of hydraulic shock damaging the system;
   - that steel pipes and components shall be protected against corrosion with a rustproof coating before applying any insulation;
   - that precautions shall be taken to avoid excessive vibration or pulsation;
   - the minimum floor area of the room shall be mentioned in the form of a table or a single figure without reference to a formula;
   - after completion of field piping for split systems, the field pipe-work shall be pressure tested with an inert gas and then vacuum tested prior to refrigerant charging, according to the following requirements:
     a. The required nitrogen test pressure is 500 PSI.
     b. The test pressure after removal of pressure source shall be maintained for at least 1 hour with no decrease of pressure indicated by the test gauge, with test gauge resolution not exceeding 5% of the test pressure.
     c. During the evacuation test, after achieving a vacuum level specified in the manual or less, the refrigeration system shall be isolated from the vacuum pump and the pressure shall not rise above 1500 microns within 10 min. The vacuum pressure level shall be specified in the manual, and shall be the lessor of 500 microns or the value required for compliance with national and local codes and standards, which may vary between residential, commercial, and industrial buildings.
   - Field-made refrigerant joints indoors shall be tightness tested according to the following requirements: The test method shall have a sensitivity of 1/8 oz (5 g) per year of refrigerant or better under a pressure of at least 125% of the maximum allowable pressure. No leak shall be detected.

3. **Qualification of Workers**

   Any maintenance, service and repair operations must be performed by skilled and authorized personnel. Every working procedure that affects safety means shall only be carried out by competent persons that joined the training and achieved competence should be documented by a certificate. The training of these procedures is carried out by national training organizations or manufacturers that are accredited to teach the relevant national competency standards that may be set in legislation. Examples for such working procedures are:
   - breaking into the refrigerating circuit;
   - opening of sealed components;
   - opening of ventilated enclosures.

4. **Ventilated Area**

   Ensure that the area is in the open or that it is adequately ventilated before breaking into the system or conducting any hot work. A degree of ventilation shall continue during the period that the work is carried out. The ventilation should safely disperse any released refrigerant and preferably expel it externally into the atmosphere.

5. **Cabling**

   Check that cabling is not subjected to wear, corrosion, excessive pressure, vibration, sharp edges or any other adverse environmental effects. The check shall also take into account the effects of aging or continual vibration from sources such as compressors or fans.

6. **Detection of Flammable Refrigerants**

   Under no circumstances shall potential sources of ignition be used in the searching for or detection of refrigerant leaks. A halide torch (or any other detector using a naked flame) shall not be used.
   The following leak detection methods are deemed acceptable for refrigerant systems. Electronic leak detectors that have a sensitivity of 1/8 Oz (5g)/year may be used to detect leaks of flammable refrigerants. (Detection equipment shall be calibrated in a refrigerant free area.) Ensure that the detector is not a potential source of ignition and is suitable for the refrigerant used. Leak detection equipment shall be set at a percentage of the LFL of the refrigerant and shall be calibrated to the refrigerant employed, and the appropriate percentage of gas (25% maximum) is confirmed.
   Leak detection fluids are also suitable for use in external leak detection.

**NOTE: Examples of leak detection fluids are**
**- bubble method,**
**- fluorescent method agents.**

**If a leak is suspected, all open flames shall be removed/ extinguished. If a leakage of refrigerant is found which requires brazing, all of the refrigerant shall be recovered from the system, or isolated (by means of shut off valves) in a part of the system remote from the leak. See the following instructions of removal of refrigerant.**

**7. Evacuation**

When breaking into the refrigerant circuit to make repairs - or for any other purpose conventional procedures shall be used. However, for flammable refrigerants it is important that best practice be followed, since flammability is a consideration. The following procedure shall be adhered to:

- safely recover refrigerant following local and national regulations; evacuate;
- purge the circuit with NITROGEN;
- evacuate (requirement);
- continuously flush or purge with NITROGEN when using flame to open circuit; and
- open the circuit

The refrigerant charge shall be recovered into the correct recovery cylinders. Charging must be performed by the liquid charging method. For appliances containing flammable refrigerants, the system shall be purged with oxygen-free nitrogen to render the appliance safe for flammable refrigerants. This process might need to be repeated several times. Compressed air or oxygen shall not be used for purging refrigerant systems.

For appliances containing flammable refrigerants, refrigerants purging shall be achieved by breaking the vacuum in the system with oxygen-free nitrogen and continuing to fill until the working pressure is achieved, then venting to atmosphere, and finally pulling down to a vacuum (requirement). This process shall be repeated until no refrigerant is within the system (requirement). When the final oxygen-free nitrogen charge is used, the system shall be vented down to atmospheric pressure to enable work to take place. The outlet for the vacuum pump shall not be close to any potential ignition sources, and ventilation shall be available.

**Recovery:** When removing refrigerant from a system, either for servicing or decommissioning, it is recommended good practice that all refrigerants are removed safely.

When transferring refrigerant into cylinders, ensure that only appropriate refrigerant recovery cylinders are employed. Ensure that the correct number of cylinders for holding the total system charge is available. All cylinders to be used are designated.

**8. Charging Procedures**

In addition to conventional charging procedures, the following requirements shall be followed:

Works shall be undertaken with appropriate tools only (in case of uncertainty, consult the manufacturer of the tools for use with flammable refrigerants)

Ensure that contamination of different refrigerants does not occur when using charging equipment. Hoses or lines shall be as short as possible to minimize the amount of refrigerant contained in them.

Charging must be performed by the liquid charging method.

Ensure that the refrigeration system is grounded prior to charging the system with refrigerant.

Label the system when charging is complete (if not already).

Extreme care shall be taken not to overfill the refrigeration system.

Prior to recharging the system it shall be pressure tested with oxygen free nitrogen (OFN). The system shall be leak tested on completion of charging but prior to commissioning. A follow up leak test shall be carried out prior to leaving the site.

**Manufacturer reserves the right to change, at any time, specifications and designs without notice and without obligations.**

# ACCESSORIES

The system is shipped with the following accessories. Use all of the installation parts and accessories to install the system. Improper installation may result in water leakage, electrical shock and fire, or cause the equipment to fail. Keep the installation manual in a safe place and do not discard any other accessories until the installation has been completed.

**Table 4 — Accessories**

| NAME | SHAPE | QUANTITY |
|---|---|---|
| Manual | 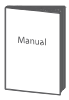  | 2 |
| Drain Joint | | 1 |
| Seal | | 1 |
| Mounting plate+ Cardboard | 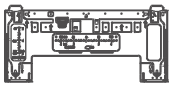 | 1+1 |
| Anchor | 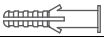 | 5 |
| Mounting Plate Screw | | 5 |
| Remote Controller | | 1 |
| Batteries | 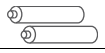 | 2 |
| Remote Controller holder | | 1 |
| Remote Controller Holder Screw | | 2 |
| Small Filter<br>(Must be installed on the back of main air filter by an authorized technician while installing the Mounting plate to the machine) | | 1-2 |
| Transfer connector<br>(Φ3/4in(19mm) transfer to Φ5/8in(16mm).<br>Shipped with the indoor unit for the North American market 33K hyper heat unit only.) | 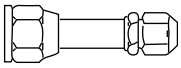 <br>**NOTE: In North America market, when 33K hyper heat indoor unit matches with multi-zone condensers, you must purchase pipe with liquid side Φ3/8in (9.52mm) and gas side Φ5/8in (16mm).The transfer connector must be installed on the indoor unit gas side to meet the pipe size.** | 1 |
| Copper Nut | <br>**NOTE: Used to connect the connecting pipe between the indoor and outdoor units** | 2 |

**Table 5 — Pipe Specification**

| NAME | MODEL | PIPE SPECIFICATION | | REMARK |
|---|---|---|---|---|
| | | LIQUID SIDE | GAS SIDE | |
| Connecting pipe assembly | 06K | Φ1/4 in (Φ 6. 35mm) | Φ3/8 in (Φ9.52mm) | Parts you must purchase separately. Consult the dealer about the proper pipe size of the unit you purchased. |
| | 09K | Φ1/4 in (Φ 6. 35mm) | Φ3/8 in (Φ9.52mm) | |
| | 12K | Φ1/4 in (Φ 6. 35mm) | Φ3/8 in (Φ9.52mm) | |
| | 18K | Φ1/4 in (Φ 6. 35mm) | Φ1/2 in (Φ12.7mm) | |
| | 24K | Φ3/8 in (Φ 9.52mm) | Φ5/8 in (Φ16mm) | |
| | 30K | Φ3/8 in (Φ 9.52mm) | Φ5/8 in (Φ16mm) | |
| | 33K | Φ3/8 in (Φ 9.52mm) | Φ3/4 in (Φ19mm) | |
| | 36K | Φ3/8 in (Φ 9.52mm) | Φ5/8 in (Φ16mm) | |

# MODEL NUMBERS

**Table 6 — Indoor Model Numbers**

| System Tons | BTUh | Voltage | Model |
|---|---|---|---|
| 1 | 12,000 | 115-1 | D5MAHA12XA1* |
| 0.5 | 6,000 | 208/230-1 | D5MAHA06XA3 |
| 0.75 | 9,000 | 208/230-1 | D5MAHA09XA3 |
| 1 | 12,000 | 208/230-1 | D5MAHA12XA3 |
| 1.5 | 18,000 | 208/230-1 | D5MAHA18XA3 |
| 2 | 24,000 | 208/230-1 | D5MAHA24XA3 |
| 2.5 | 30,000 | 208/230-1 | D5MAHA30XA3 |
| 2.75 | 33,000 | 208/230-1 | D5MAHA33XA3 |
| 3 | 36,000 | 208/230-1 | D5MAHA36XA3 |

**NOTE: *Unit is a compatible match with the 37MARAQ12AA1 115 V heat outdoor unit.**

# CAPACITY

**Table 7 — Capacity**

| CAPACITY | INDOOR | OUTDOOR |
|---|---|---|
| 6K | D5MAHAQ06XA3 | 37MAHAQ06AA3 |
| 9k | D5MAHAQ09XA3 | 37MAHAQ09AA3 |
| | | 37MARAQ09AA3 |
| 12k (115V) | D5MAHAQ12XA1 | 37MARAQ12AA1 |
| 12K (230V) | D5MAHAQ12XA3 | 37MARAQ12AA3 |
| | | 37MAHAQ12AA3 |
| 18k | D5MAHAQ18XA3 | 37MAHAQ18AA3 |
| | | 37MARAQ18AA3 |
| 24k | D5MAHAQ24XA3 | 37MAHAQ24AA3 |
| | | 37MARAQ24AA3 |
| 30k | D5MAHAQ30XA3 | 37MARAQ30AA3 |
| 33k | D5MAHAQ33XA3 | 37MAHAQ33AA3 |
| 36k | D5MAHAQ36XA3 | 37MARAQ36AA3 |

**Manufacturer reserves the right to change, at any time, specifications and designs without notice and without obligations.**

# DIMENSIONS

**Table 8 — Dimensions**

| SYSTEM SIZE | | 12K 115V | 06K | 09K | 12K | 18K | 24K | 30K | 33K | 36K |
|---|---|---|---|---|---|---|---|---|---|---|
| | | 115V | (208/230 V) | (208/230 V) | (208/230 V) | (208/230 V) | (208/230 V) | (208/230 V) | (208/230 V) | (208/230 V) |
| Height (H) | in (mm) | 11.61(295) | 11.61(295) | 11.61(295) | 11.61(295) | 12.56(319) | 14.57(370) | 14.57(370) | 14.57(370) | 14.57(370) |
| Width (W) | in (mm) | 31.30(795) | 31.30(795) | 31.30(795) | 31.30(795) | 37.99(965) | 44.88(1140) | 44.88(1140) | 44.88(1140) | 44.88(1140) |
| Depth (D) | in (mm) | 8.86(225) | 8.86(225) | 8.86(225) | 8.86(225) | 9.41(239) | 10.83(275) | 10.83(275) | 10.83(275) | 10.83(275) |
| Weight - Net | lbs. (kg) | 23.15(10.5) | 22.93(10.4) | 23.37(10.6) | 22.93(10.4) | 27.34(12.4) | 43.65(19.8) | 43.21(19.6) | 43.21(19.6) | 43.21(19.6) |
| **PACKAGING** | | | | | | | | | | |
| Height | in (mm) | 12.01(305) | 12.01(305) | 12.01(305) | 12.01(305) | 12.80(325) | 13.98(355) | 13.98(355) | 13.98(355) | 13.98(355) |
| Width | in (mm) | 34.25(870) | 34.25(870) | 34.25(870) | 34.25(870) | 41.14(1045) | 48.43(1230) | 48.43(1230) | 48.43(1230) | 48.43(1230) |
| Depth | in (mm) | 14.57(370) | 14.57(370) | 14.57(370) | 14.57(370) | 15.75(400) | 17.91(455) | 17.91(455) | 17.91(455) | 17.91(455) |
| Weight-Gross | lbs. (kg) | 29.54(13.4) | 29.32(13.3) | 29.98(13.6) | 29.32(13.3) | 36.6(16.6) | 55.56(25.2) | 54.67(24.8) | 55.78(25.3) | 54.67(24.8) |
| Carton Drawing No. | -- | 855*355*290 (33.66*13.98* 11.42) | 855*355*290 (33.66*13.98* 11.42) | 855*355*290 (33.66*13.98* 11.42) | 855*355*290 (33.66*13.98* 11.42) | 1030*385*305 (40.55*15.16* 12.01) | 1215*440*340 (47.83*17.32* 13.39) | 1215*440*340 (47.83*17.32* 13.39) | 1215*440*340 (47.83*17.32* 13.39) | 1215*440*340 (47.83*17.32* 13.39) |
| Carton Material | -- | Double corrugated | | | | | | | | |
| Material Thickness | in (mm) | 0.295(7.5) | 0.295(7.5) | 0.295(7.5) | 0.295(7.5) | 0.295(7.5) | 0.295(7.5) | 0.295(7.5) | 0.295(7.5) | 0.295(7.5) |

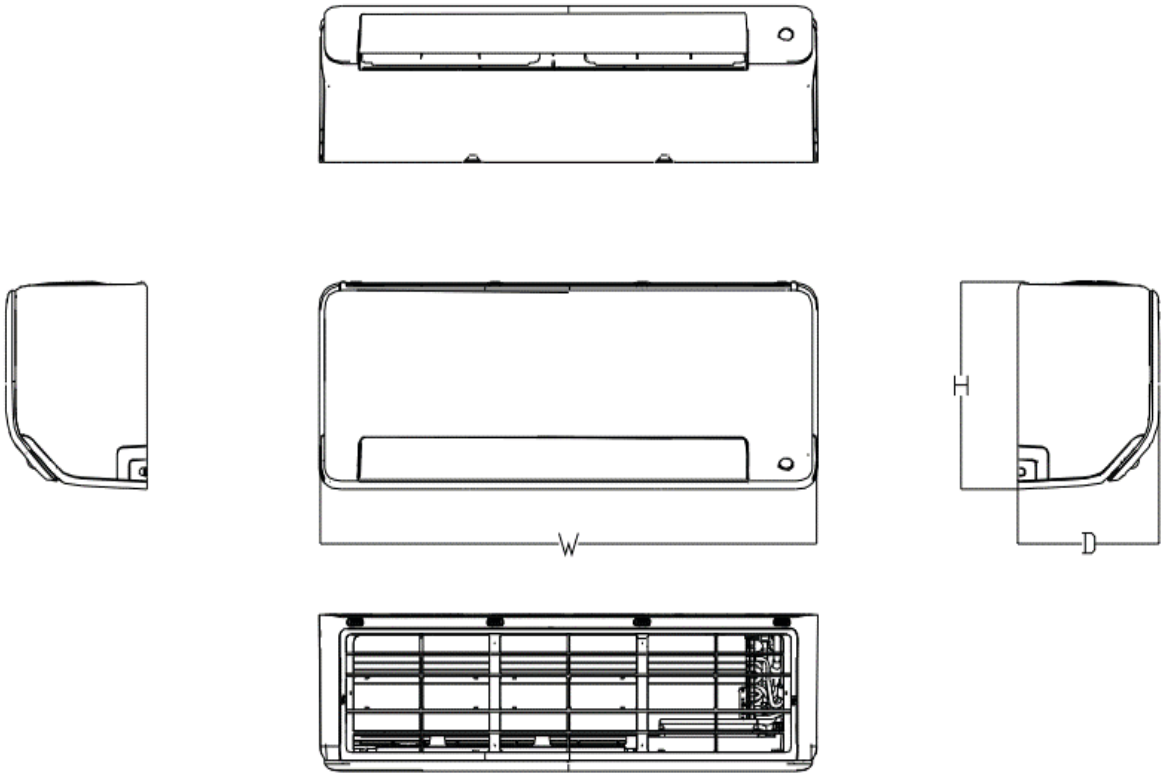


**Fig. 2 — Dimensions**

# ELECTRICAL DATA

**Table 9 — Electrical Data**

| OUTDOOR UNIT | | 12K | 06K | 09K | 12K | 18K | 24K | 30K | 33K | 36K |
|---|---|---|---|---|---|---|---|---|---|---|
| | | (115 V) | (208/230V) | | | | | | | |
| Minimum Circuit Ampacity (MCA) | A | 3 | 3 | 3 | 3 | 3 | 3 | 3 | 3 | 3 |
| MOP | A | 15 | 15 | 15 | 15 | 15 | 15 | 15 | 15 | 15 |
| Voltage-Phase-Frequency | | 115-1-60 | 208/230-1-60 | | | | | | | |
| Max – Min Voltage Range | | 127-104 | 253-187 | | | | | | | |

**LEGEND**
**FLA** - Full Load Amps
**MCA** - Minimum Circuit Amps
**MOP**- Maximum Overcurrent Protection

# INSTALLATION OVERVIEW

## PARTS LIST

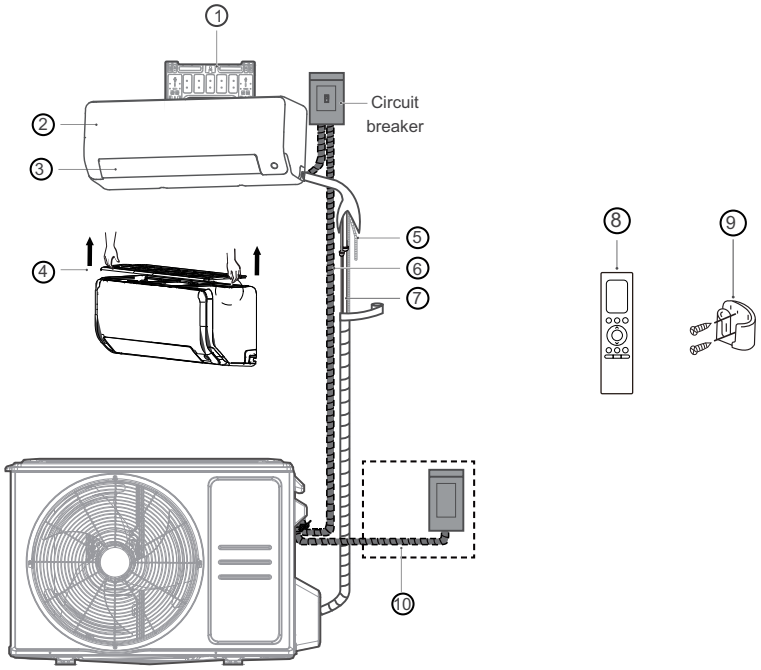


1. Wall Mounting Plate
2. Front Panel
3. Louver
4. Air Filter (Pull it upwards)
5. Drain Pipe (purchased separately)
6. Connection Cable (purchased separately)
7. Refrigerant Piping (purchased separately)
8. Remote Controller
9. Remote Controller Holder
10. Outdoor Unit Power Cable

The following tools are recommended

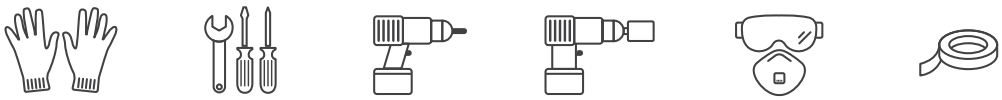

Gloves | Screwdriver & wrench | Hammer drill | Core drill | Goggles & masks | Vinyl tape

**Fig. 3 — Parts List**

# INSTALLATION SUMMARY

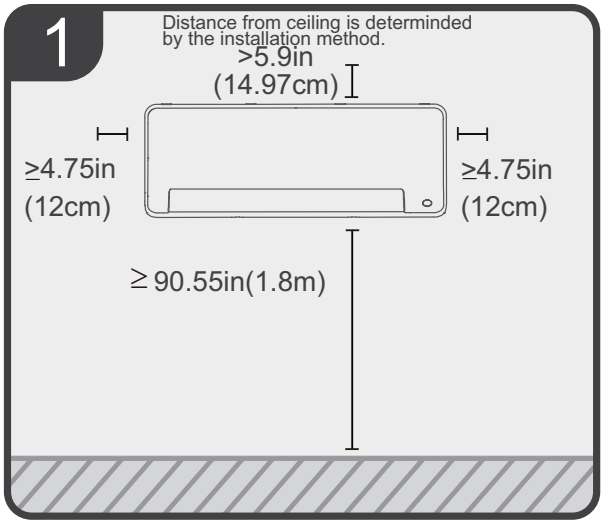


**Fig. 4 —Select Installation Location**

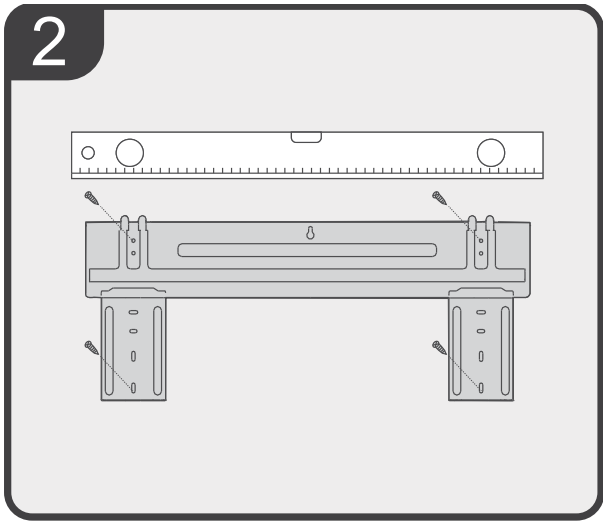


**Fig. 5 — Attach Mounting Plate**

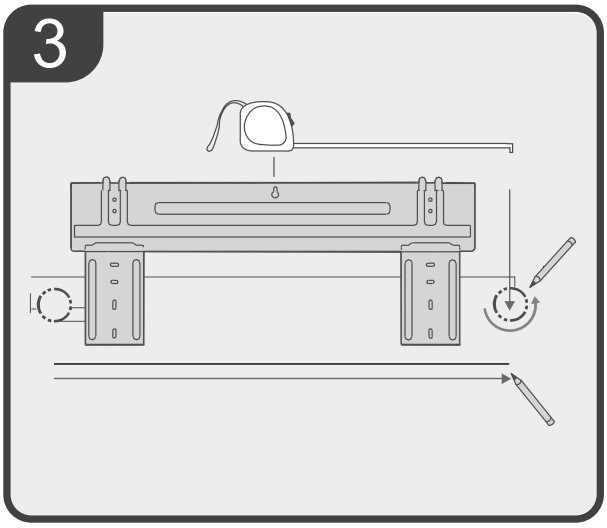


**Fig. 6 — Determine Wall Hole Position**

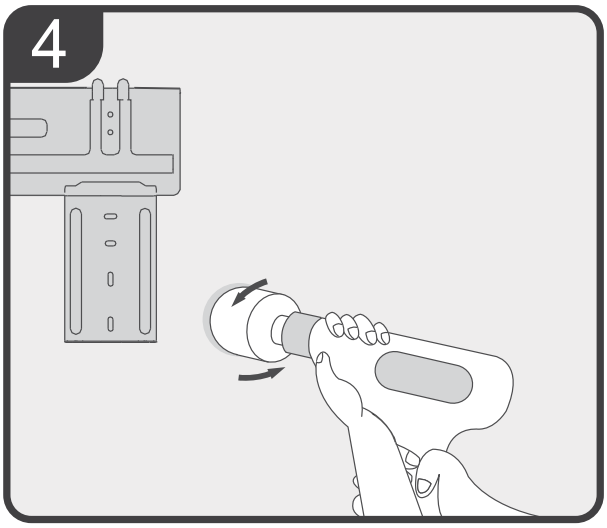


**Fig. 7 — Drill Hole Wall**

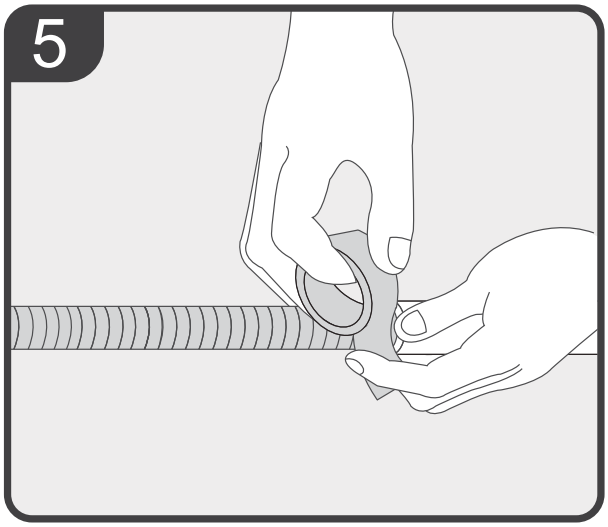


**Fig. 8 — Prepare Drain Hose**

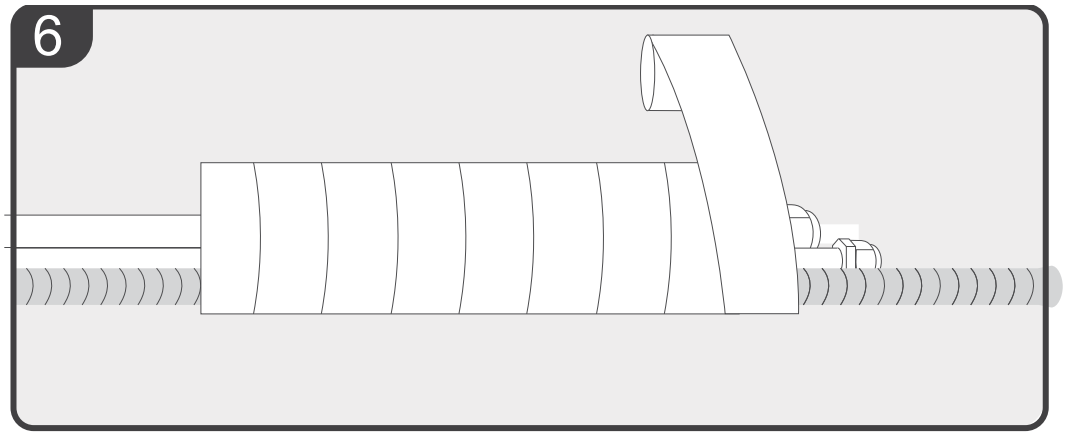


**Fig. 9 — Wrap Piping and Drain Hose**

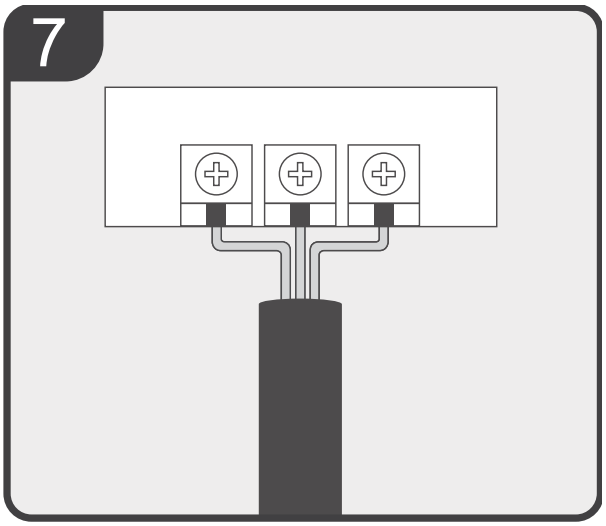


**Fig. 10 — Connect Wiring**

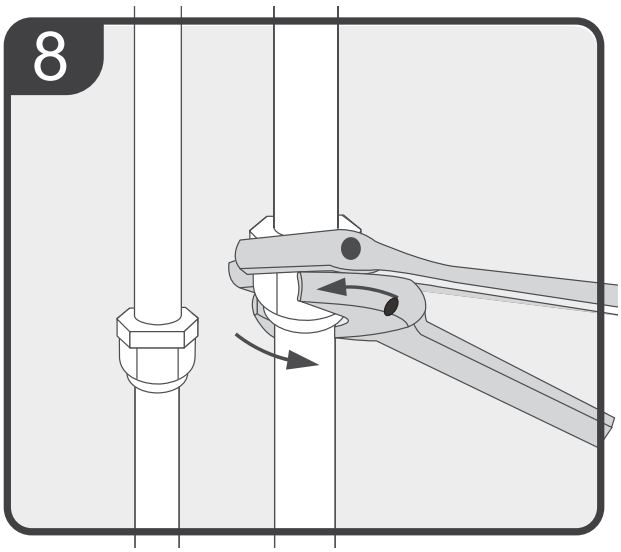


**Fig. 11 — Connect Piping**

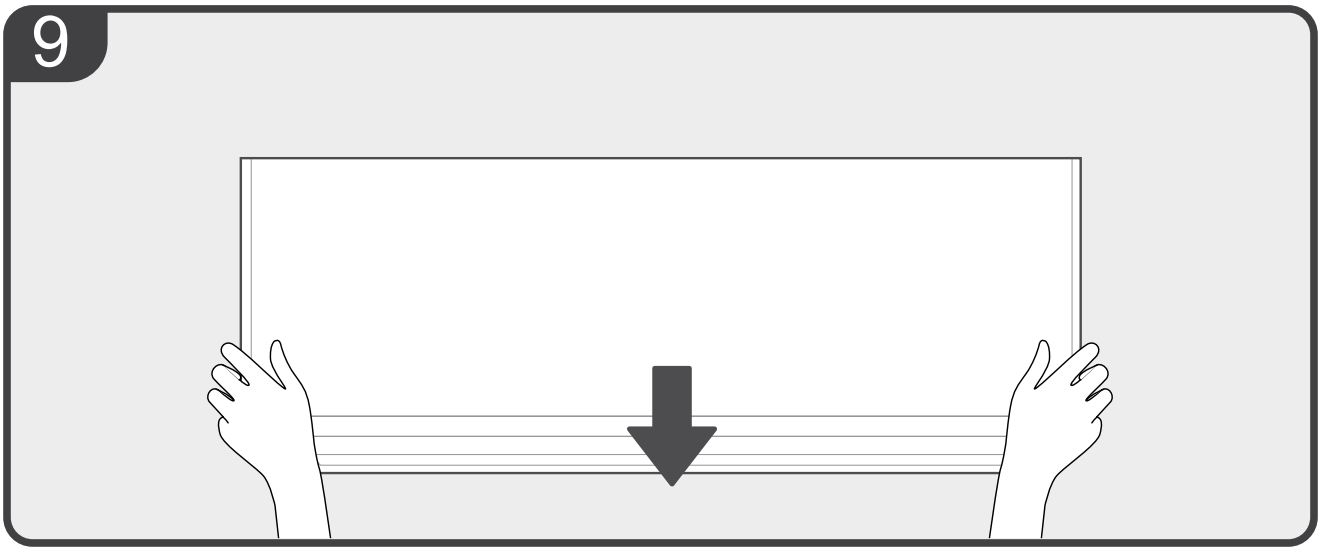


**Fig. 12 — Mount Indoor Unit**

# INDOOR UNIT INSTALLATION

## Step 1: Select Installation Location

**NOTE: Before installing the indoor unit, refer to the label on the unit box to ensure that the model number of the indoor unit matches the model number of the outdoor unit.**

The following are standards that will help you select an appropriate location for the unit. Proper installation locations meet the following standards:

☑ Good air circulation

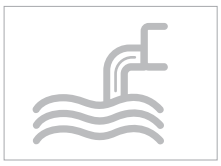

☑ Convenient drainage

☑ Noise from the unit will not disturb other people.

☑ A location at least 3.2 ft/1m from all other electrical devices (e.g., TV, radio, computer)

☑ Firm and solid—the location will not vibrate

☑ Strong enough to support the weight of the unit

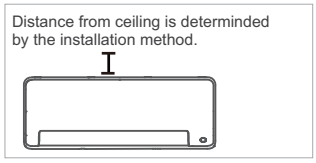


**If you do not need the kick stand to prop up the unit:**
Finish the pipe and cable connections before mounting the indoor unit on the wall. If the installation height is limited, 1.96in. (5cm) from the ceiling is allowable, however this can lower product performance. To ensure enough space to install and remove the top air filter, keep at least 3.93in (10cm) or more from the ceiling.

**If you need the kick stand to prop up the unit:**
If connecting pipe and cable with front panel open, the minimum distance from ceiling is 8.67in (22cm) or more. If the connecting pipe and cable is without the front panel (remove it), the minimum distance from ceiling is 4.33in (11cm) or more.

DO NOT install unit in the following locations:

- ⊘ Near any source of heat, steam, or combustible gas
- ⊘ Near flammable items such as curtains or clothing
- ⊘ Near any obstacle that might block air circulation
- ⊘ Near the doorway
- ⊘ In a location subject to direct sunlight

**NOTE: If there is no fixed refrigerant piping: While choosing a location, be aware that you should leave ample room for a wall hole (see Drill wall hole for connecting piping step) for the signal cable and refrigerant piping that connect the indoor and outdoor units. The default position for all piping is the right side of the indoor unit (while facing the unit). However, the unit can accommodate piping to both the left and right.**

# Step 2: Drill Wall Hole for Connecting Piping

## Determine Wall Hole Location

**NOTE: The size of the wall hole is determined by the connecting pipes. When the size of the gas side connecting pipe is 5/8”(16mm) or more, the wall hole should be 3.54in(90mm). For the size of connecting pipe is less than 5/8”(16mm), the wall hole should be 2.5in(65mm).**

1. Remove the screw that attaches the mounting plate to the back of the indoor unit.

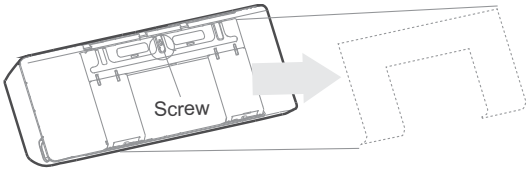


**Fig. 13 — Remove screw**

2. Secure the mounting plate to the wall with the screws provided. Ensure that mounting plate is flat against the wall.

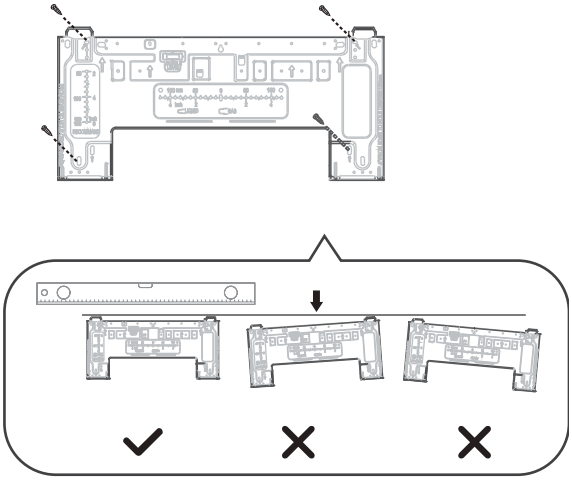


**Fig. 14 — Secure the Mounting Plate**

3. Confirm the mounting plate that came with your unit. Determine the location of the wall hole based on the position of the mounting plate. The dotted rectangular box on the right figure shows the size of your product.

**CAUTION**

For the convenience of installation, there is a bubble level on the mounting plate. The bubble level on the mounting plate cannot be removed. If it is broken, make sure to clean up the leaking liquid.

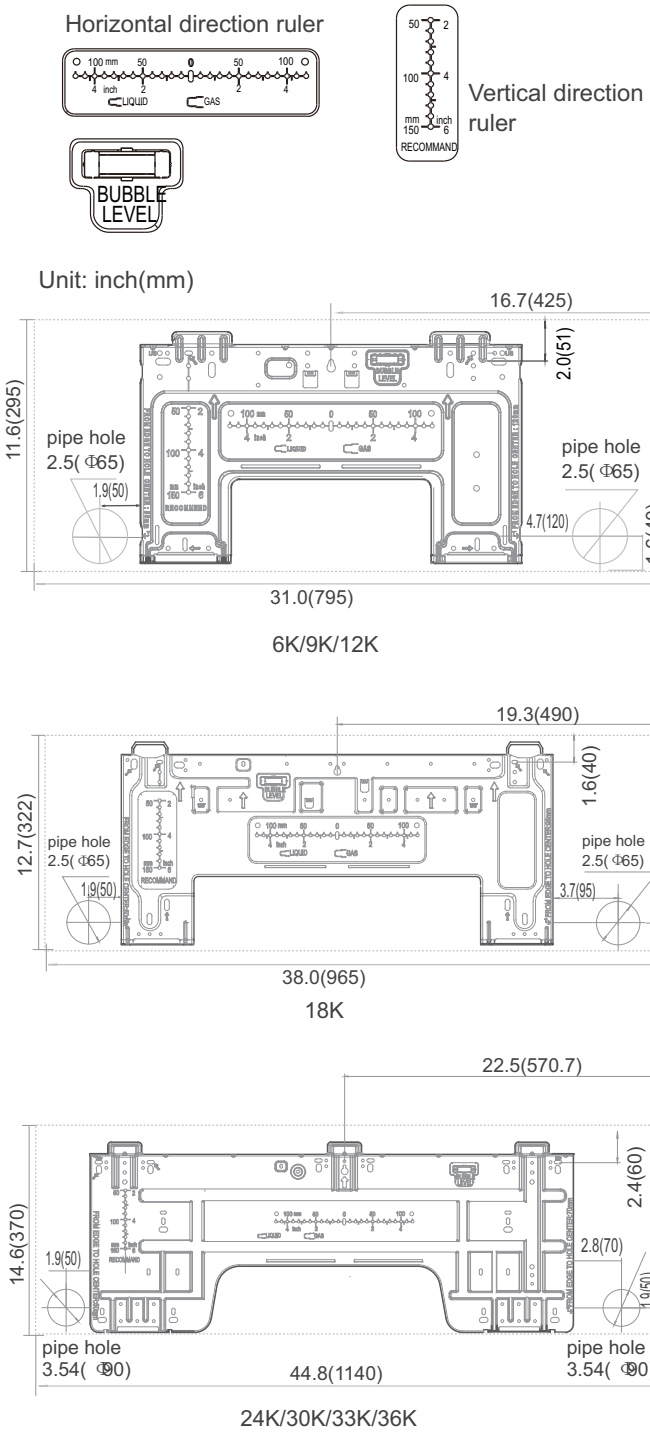


**Fig. 15 — Ruler and Mounting Plates**

## Drill Wall Hole

**CAUTION**

When drilling the wall hole, make sure to avoid wires, plumbing, and other sensitive components.

1. Using a 2.5in (65mm) or 3.54in (90mm) core drill, drill a hole in the wall. Ensure that the hole is drilled at a slight downward angle, so that the outdoor end of the hole is lower than the indoor end by about 0.2-0.275in(5-7mm). This ensures proper water drainage.

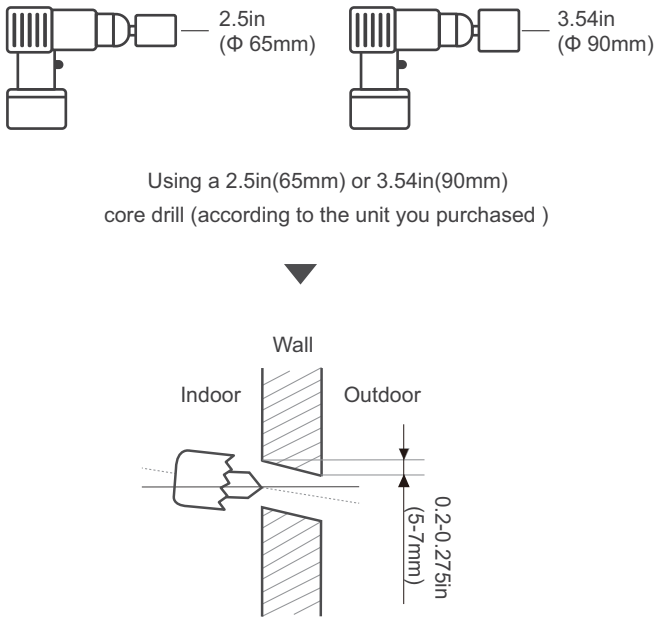


**Fig. 16 — Drill the wall hole**

2. Place the protective wall cuff into the hole. This protects the edges of the hole and helps seal it when you finish the installation process.

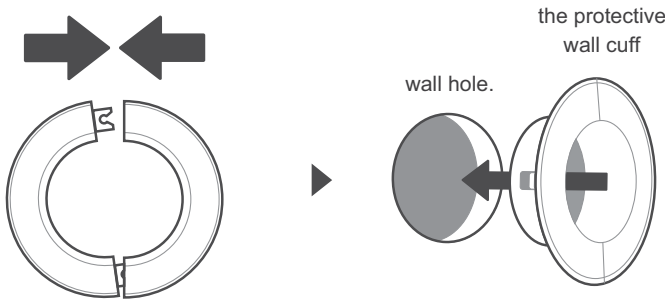


**Fig. 17 — Place the protective wall cuff in the hole**

**NOTE: If the wall is made of brick, concrete, or similar material, drill 0.2in-diameter(5mm-diameter) holes in the wall and insert the sleeve anchors provided. Then secure the mounting plate to the wall by tightening the screws directly into the clip anchors.**

# Step 3: Install Refrigerant Pipe & Drain Hose

## Prepare Refrigerant Piping

1. Based on the position of the wall hole relative to the mounting plate, choose the side from which the piping exits the unit. You have four options for the exit direction of the piping.

**NOTE: In some locations of US, a conduit tube must be used to connect the cable. To ensure an enough space for the pipes running and the machine is against the wall after installation, It is recommended to attach the drain hose to the right-hand side (when you are facing the back of the unit). When choose Left-hand side or Right-hand side piping, ensure that the pipes come out horizontally so as not to affect the lower panel installation.**

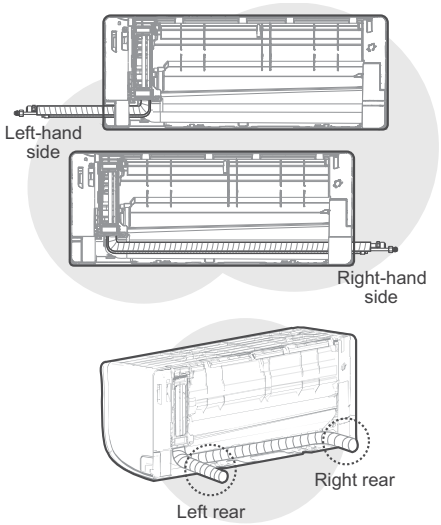


**Fig. 18 —Piping Connections**

2. If the wall hole is behind the unit, keep the knock-out panel in place. If the wall hole is to the side of the indoor unit, remove the plastic knock-out panel from that side of the unit. Use needle nose pliers if the plastic panel is too difficult to remove by hand.

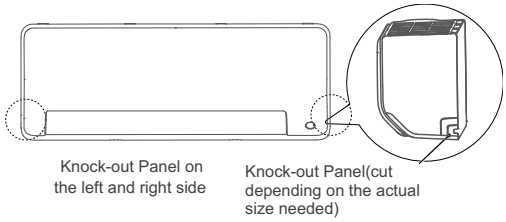


**Fig. 19 — Knock-Out Panel**

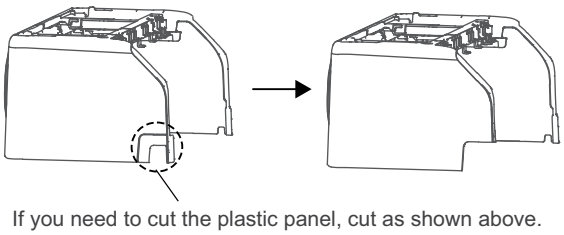


**Fig. 20 — Knock-Out Panel**

3. Use the holder at the back of the unit to prop up the unit, providing you with enough room to connect the refrigerant piping, and drain hose.
4. Connect the indoor unit's refrigerant piping to the connective piping that joins the indoor and outdoor units. Refer to "Step 3: Install Refrigerant Pipe & Drain Hose on page 16.
5. Based on the position of the wall hole relative to the mounting plate, determine the necessary angle of your piping. Grip the refrigerant piping at the base of the bend. Slowly, with even pressure, bend the piping towards the hole. Do not dent or damage the piping during the process.

**CAUTION**

Be extremely careful not to dent or damage the piping while bending them away from the unit. Any dents in the piping affects the unit's performance.

If the refrigerant piping is already embedded in the wall, follow Figure 21.

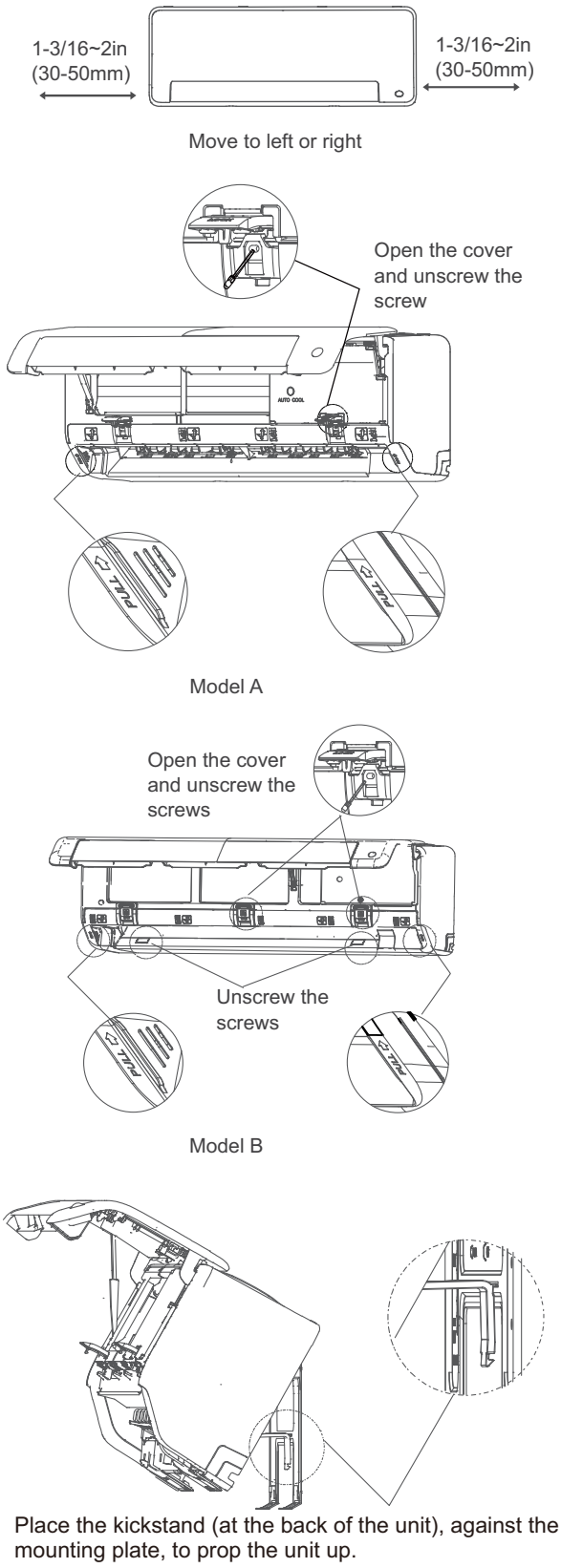


**Fig. 21 — Embedded Refrigerant Piping**

The unit comes equipped with a kickstand to provide more room to connect the refrigerant piping, signal cable and the drain hose.

**NOTE: Keep in mind that the hooks on the mounting plate are smaller than the holes on the back of the unit. If you find that you don't have ample room to connect embedded pipes to the indoor unit, the unit can be adjusted left or right by about 1.18-1.95in(30-50mm), depending on the model.**

Open and fix the position of the panel, then, open the covers of the two lock blocks, unscrew the screw showed in the picture (Model A and Model B), then hold both sides of the lower panel in the place marked "PULL", pull it upwards to release the buckles, then take the lower panel down.

Use the holder at the back of the unit to prop up the unit, giving you enough room to connect the refrigerant piping, and drain hose.

Connect drain hose and refrigerant piping (refer to Refrigerant Piping Connection section of this manual for instructions).

Keep pipe connection point exposed to perform the leak test.

After the leak test, wrap the connection point with insulation tape. Release the holder that is propping up the unit.

Using even pressure, push down on the bottom half of the unit. Keep pushing down until the unit snaps onto the hooks along the bottom of the mounting plate.

## Connect Drain Hose

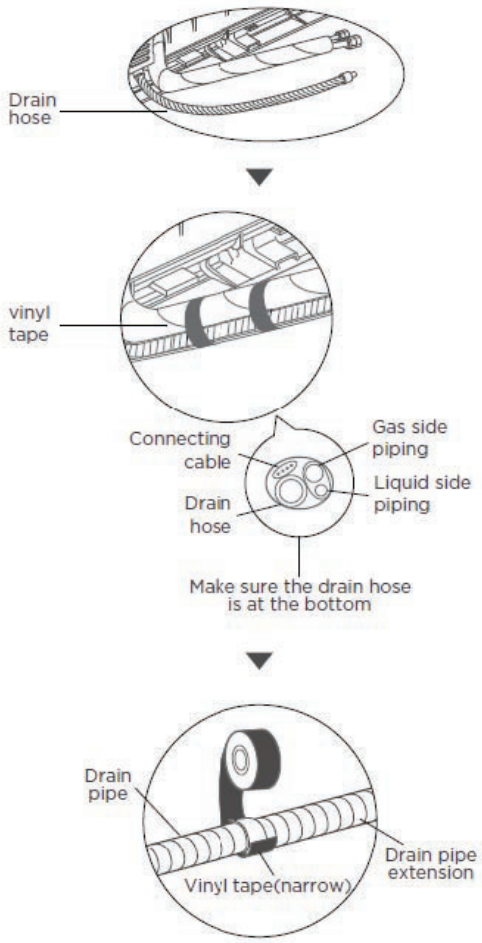


**Fig. 22 — Connect the Drain Hose**

1. The drain hose can be attached to the left or right side. To ensure proper drainage, attach the drain hose on the same side that your refrigerant piping exits the unit. Attach drain hose extension (purchased separately) to the end of drain hose.
   a. Wrap the connection point firmly with Teflon tape to ensure a good seal and to prevent leaks.
   b. For the portion of the drain hose that remains indoors, wrap it with foam pipe insulation to prevent condensation.
   c. Remove the air filter and pour a small amount of water into the drain pan to ensure that water flows from the unit smoothly.

**NOTE: Make sure to arrange the drain hose according to illustrations in Figure 23.**

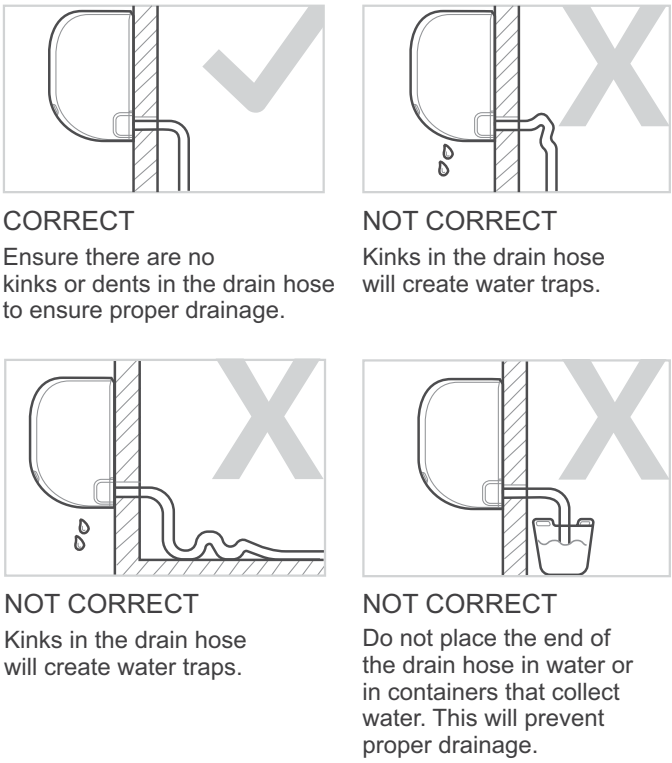


**Fig. 23 — Arrange the Drain**

**⚠ CAUTION**

To prevent unwanted leaks plug the unused drain hole with the rubber plug provided.

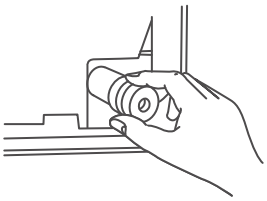

**Fig. 24 — Plug**

# Step 4: Electrical Work Preparation

**WARNING**

Before performing any electrical work, read these regulations before performing any electrical or wiring work, turn off the main power to the system.

1. All wiring must comply with local and national electrical codes, regulations and must be installed by a licensed electrician.
2. All electrical connections must be made according to the Electrical Connection Diagram located on the panels of the indoor and outdoor units.
3. If there is a serious safety issue with the power supply, stop work immediately. Explain your reason to the homeowner that the safety issue must be resolved prior to resuming and completing installation
4. Only connect the unit to an individual branch circuit outlet. Do not connect another appliance to that outlet.
5. Make sure to properly ground the air conditioner.
6. 7. Every wire must be firmly connected. Loose wiring can cause the terminal to overheat, resulting in product malfunction and possible fire.
7. Do not let wires touch or rest against refrigerant tubing, the compressor, or any moving parts within the unit.
8. To avoid getting an electric shock, never touch the electrical components soon after the power supply has been turned off. After turning off the power, always wait 10 minutes or more before you touch the electrical components.

**WARNING**

All wiring must be performed strictly in accordance with the wiring diagram located on the back of the Indoor Unit's front panel.

## Connect Signal and Power Cables

The signal cable enables communication between the indoor and outdoor units. You must first choose the right cable size before preparing it for connection.

**NOTE: Choose the cable type according to the local electrical codes and regulations. Be sure to select the right cable size according to the Minimum Circuit Ampacity indicated on the nameplate of the unit.**

**WARNING**

**DO NOT MIX UP LIVE AND NULL WIRES**

This is dangerous, and can cause the air conditioning unit to malfunction.

## Connection Diagrams

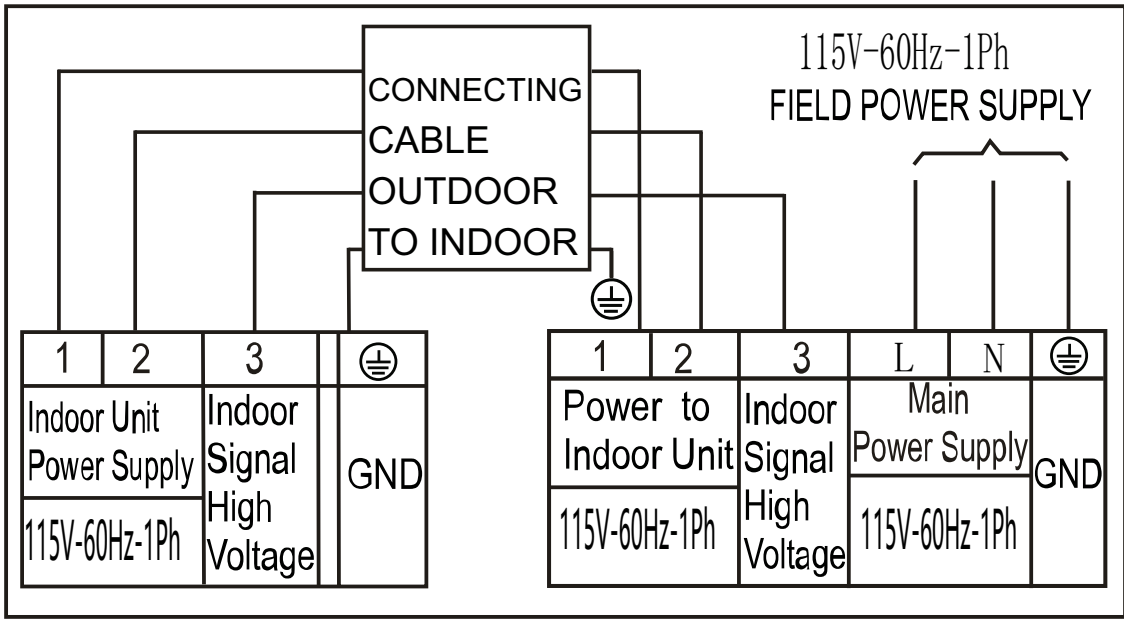


**Fig. 25 —Connection Diagram (115V)**

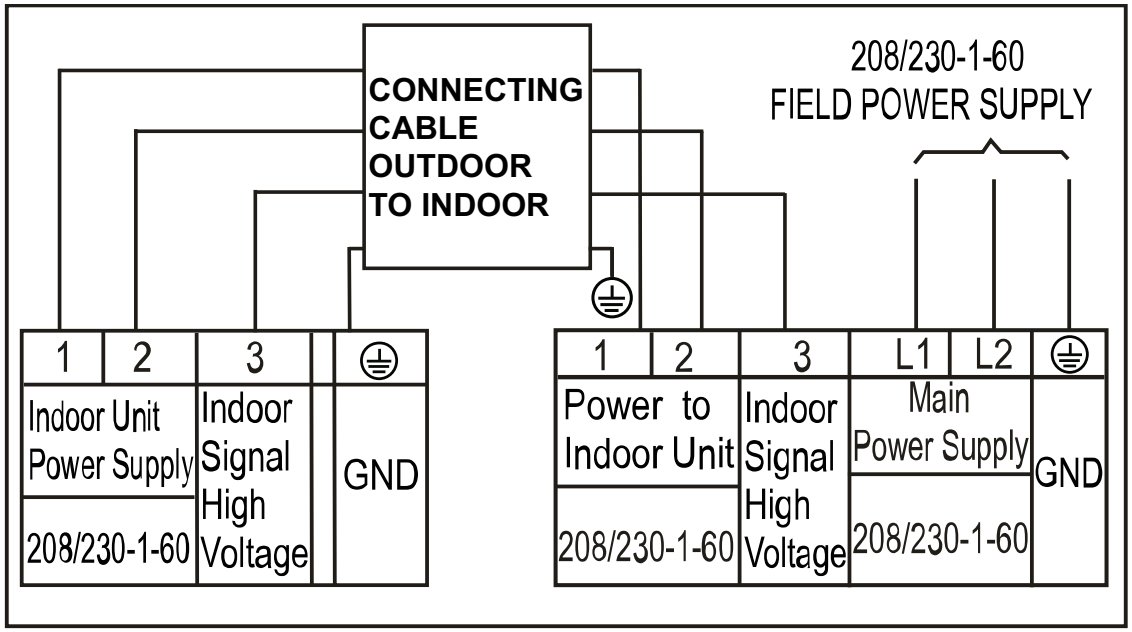


**Fig. 26 — Connection Diagram (208/230V)**

1. Open and fix the panel position, then open the covers of the two lock blocks, remove the screw, then hold both sides of the lower panel in the place marked **"PULL"**, pull it upwards to release the buckles, then take the lower panel down.
2. Open the wire box cover on the right side of the unit. This reveals the terminal block.
3. Unscrew the cable clamp below the terminal block and place it to the side.
4. Facing the back of the unit, remove the plastic panel on the bottom left-hand side.
5. Feed the signal wire through this slot, from the back of the unit to the front.
6. Facing the front of the unit, connect the wire according to the indoor unit's wiring diagram, connect the u-lug and firmly screw each wire to its corresponding terminal.
7. After checking to make sure every connection is secure, use the cable clamp to fasten the signal cable to the unit. Screw the cable clamp down tightly.
8. Replace the wire cover on the front of the unit, and the plastic panel on the back.

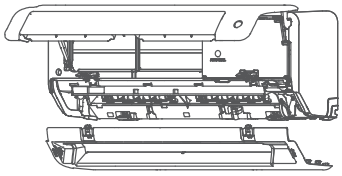

First open the front panel, then remove the lower panel.

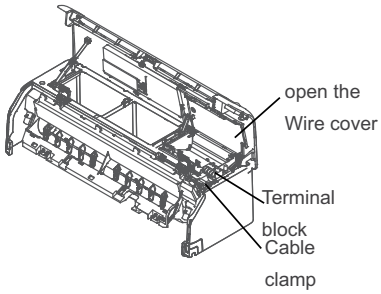


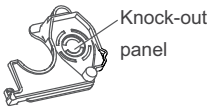


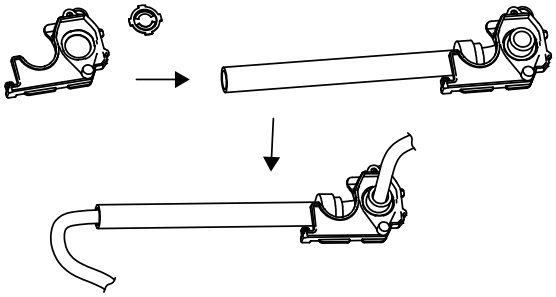

**Fig. 27 — Replace the Wire Cover**

1. Follow local codes.
2. First remove the knock-out panel to create a slot through which the conduit tube can install.
3. Then make the cable through the conduit tube and connect to the indoor unit.

# Step 5: Wrap Piping and Cables

**NOTE: Before passing the piping, and drain hose through the wall hole, you must bundle them together to save space, protect them, and insulate them.**

1. Bundle the drain hose, refrigerant pipes.

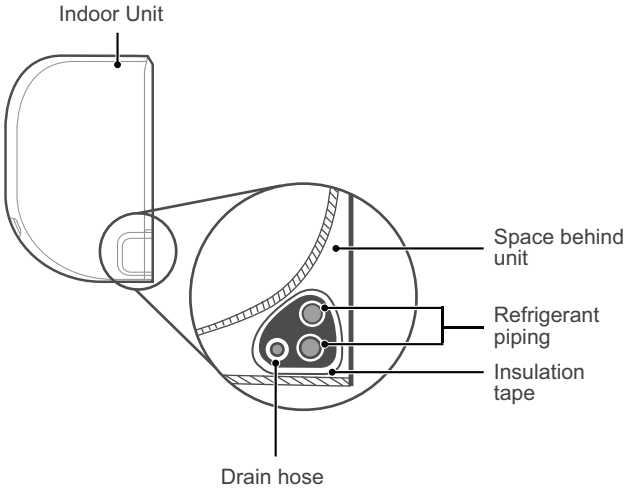


**Fig. 28 — Bundle the Drain Hose**

2. Using adhesive vinyl tape, attach the drain hose to the underside of the refrigerant pipes.

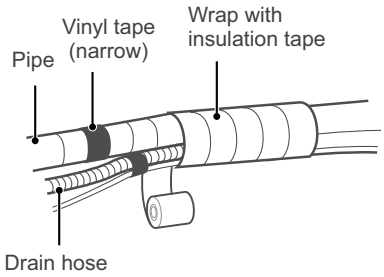


**Fig. 29 — Vinyl Tape**

3. Using insulation tape, wrap the refrigerant pipes, and drain hose tightly together. Double-check that all items are bundled.

## Drain Hose Must Be on the Bottom

Make sure that the drain hose is at the bottom of the bundle. Putting the drain hose at the top of the bundle can cause the drain pan to overflow, which can lead to fire or water damage.

## Do Not Wrap Ends of the Piping

When wrapping the bundle, keep the ends of the piping unwrapped. You need to access them to test for leaks at the end of the installation process.

# Step 6: Mount the Indoor Unit

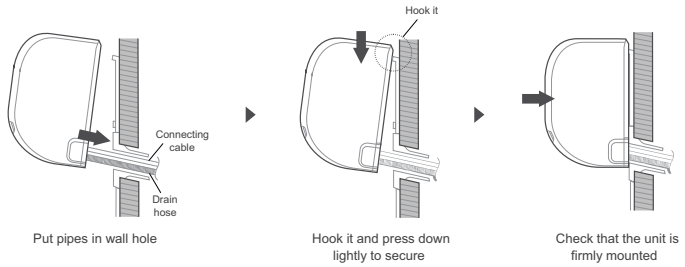


**Fig. 30 —Mount the Indoor Unit**

If you installed new connective piping to the outdoor unit, perform the following steps:

1. If you have already passed the refrigerant piping through the hole in the wall, proceed to "Step 4: Electrical Work Preparation on page 19. Otherwise, double-check that the ends of the refrigerant pipes are sealed to prevent dirt or foreign materials from entering the pipes.
2. Slowly pass the wrapped bundle of refrigerant pipes, drain hose, and signal wire through the hole in the wall.
3. Hook the top of the indoor unit on the upper hook of the mounting plate.
4. Check that unit is hooked firmly on mounting by applying slight pressure to the left and right-hand sides of the unit. The unit should not jiggle or shift.
5. Using even pressure, push down on the bottom half of the unit. Keep pushing down until the unit snaps onto the hooks along the bottom of the mounting plate.
6. Again, check that the unit is firmly mounted by applying slight pressure to the left and the right-hand sides of the unit.

**⚠ CAUTION**

For the units, adopt the following pipe connectors, strictly perform the piping work in accordance with the following instructions.

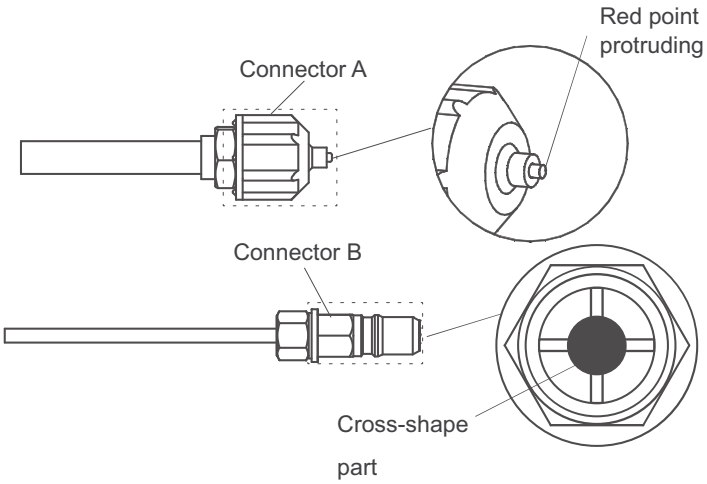


**Fig. 31 — Connector A and B**

- Before performing the refrigerant piping connection, always wear work gloves and goggles, and remember that the connectors A and B are not allowed to face people directly.
- Keep pressing the cross-shape part of connector B with a wrench or channel locks for about 5~10 seconds until the red protruding point of connector A retracts completely.
- Remove connectors A and B, then perform the refrigerant piping connection between indoor unit and outdoor unit.

## INSTALL ALL POWER, INTERCONNECTING WIRING, AND PIPING TO THE INDOOR UNIT

1. Run interconnecting piping and wiring from the outdoor unit to the indoor unit.
2. Run an interconnecting cable through the hole in wall (outside to inside).
3. Lift the indoor unit into position and route piping and drain through the hole in wall (inside to outside). Fit the interconnecting wiring into the back side of the indoor unit.
4. Put an upper claw at the back of the indoor unit on the upper hook of the mounting plate and move the indoor unit from side to side to ensure it is securely hooked. See "Step 2: Drill Wall Hole for Connecting Piping on page 15.
5. Open the indoor unit's front cover and remove the field wiring terminal block cover.
6. Pull the interconnecting wire up from the back of indoor unit and position close to the terminal block on the indoor unit.
7. Push the lower part of the indoor unit up on the wall, then move the indoor unit from side to side, up and down to ensure it is hooked securely (see Fig. 32).

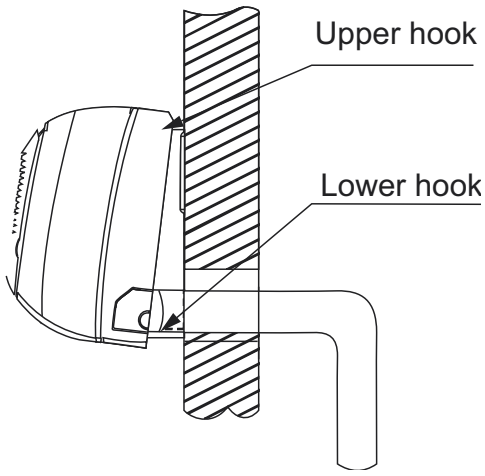


**Fig. 32 — Indoor Unit Installation**

8. Connect the wiring from the outdoor unit per the connection diagram (see Figure 25 - Figure 26).
9. Replace the field wiring cover and close the indoor unit's front cover.
10. Piping:
    a. Cut the pipe, with a pipe cutter, at 90 degrees (see Fig. 33).
    b. Remove the service connection (if provided with the unit).

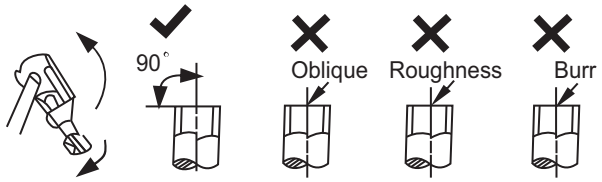


**Fig. 33 — Pipe Cutting**

c. Remove all the burrs from the cut cross section of the pipe avoiding any burrs inside the tubes.
d. Remove the flare nuts attached to the indoor and outdoor units.
e. Install the correct size flare nut onto the tubing and make the flare connection. Refer to Table 10 for the flare nut spaces.

**Table 10 — Flare Nut Spacing**

| OUTER DIAM. (MM) | A (MM) | |
|---|---|---|
| | MAX. | MIN. |
| Ø 1/4” (6.35) | 0.05 (1.3) | 0.03 (0.7) |
| Ø 3/8” (9.52) | 0.06 (1.6) | 0.04 (1.0) |
| Ø 1/2” (12.7) | 0.07 (1.8) | 0.04 (1.0) |
| Ø 5/8” (15.88) | 0.09 (2.2) | 0.08 (2.0) |

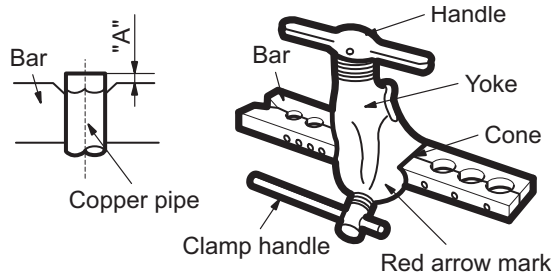


**Fig. 34 — Flare Nut Spacing**

f. Apply a small amount of refrigerant oil to the flare connection on the tubing.
g. Align the center of the pipes and/or service valve.

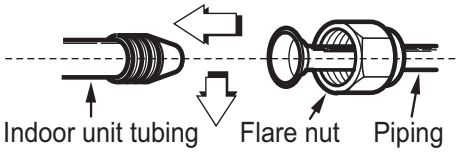


**Fig. 35 — Align Pipe Center**

h. Connect both the liquid and gas piping to the indoor unit
i. Tighten the flare nut using a torque wrench as specified in Table 11.

**Table 11 — Tightening Torque**

| Brass Flare Size | Recommended Seating Torque for Brass Flare Nuts | N-m |
|---|---|---|
| Ø1/4 | 8-10 Ft. - Lbs. | 10.8 to 13.6 |
| Ø3/8 | 15-18 Ft. - Lbs. | 20.3 to 24.4 |
| Ø1/2 | 28-32 Ft. - Lbs. | 38.0 to 43.4 |
| Ø5/8 | 38-42 Ft. - Lbs. | 51.5 to 56.9 |
| Ø3/4 | 50-55 Ft. - Lbs. | 68.0 to 74.6 |

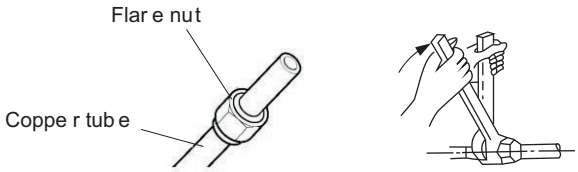


**Fig. 36 — Tighten the Flare Nut**

# WIRELESS REMOTE CONTROLLER INSTALLATION

**Fig. 37 — Wireless Remote Controller (RG10L5)**

To attach the mounting bracket:

1. Use the two screws supplied with the wireless remote control to attach the mounting bracket to the wall in a location selected by the customer and within operating range.
2. Install the batteries in the remote control.
3. Place the remote control into the remote control mounting bracket.

**NOTE: For remote control operation, refer to the remote control's owners manual.**

# OPTIONAL WIRED WALL-MOUNTED REMOTE CONTROL INSTALLATION

The wired remote controller comes with the following items:

- A set of installation instructions and owner's manuals
- 3 M4X20 Screws to mount on the wall
- 4 wall plugs to mount on the wall
- 2 M4X25 to mount on switch box
- 2 plastic screw bars to fix on switch box
- 1 set of batteries
- 1 set of connecting wires to connect to indoor unit's main board

**Fig. 38 — Wired Controller**

To connect the wired remote controller to the indoor units, connect to the 4-pin connector located on the display board.

To connect the wired remote controller to the indoor units:

1. Replace the display board with the shipped with the kit.
2. Install the adapter board (shipped with the kit).
3. Connect the adapter board to the new display board. Follow the instructions on the wired controller installation instructions manual for more details.
4. Connect the female molex plug on the adapter board to the male molex plug from the extension cable shipped with the kit.
5. Connect the extension cable to the wired controller

For setup instructions, refer to the controller installation manual.

# TROUBLESHOOTING

## Table 12 — Error Codes

| Display | Malfunction and Protection Indication |
|---|---|
| EC07 | ODU Fan Speed Out of Control |
| EC51 | ODU EEPROM Parameter Error |
| EC52 | ODU Coil Temperature Sensor(T3) error |
| EC53 | ODU Ambient Temperature Sensor (T4) Error |
| EC54 | COMP. Discharge Temperature Sensor (TP) Error |
| EC56 | IDU Coil Temperature Sensor (T2B) Error |
| ECC1 | Other IDU Refrigerant Sensor Detects Leakage (Multi-zone)* |
| EH00 | IDU EEPROM Malfunction |
| EH03 | IDU Fan Speed Out of Control |
| EH0A | IDU EEPROM Parameter Error |
| EH0E | Water Level Alarm Malfunction |
| EH12 | Main Unit or Secondary Units Malfunction |
| EH3A | External Fan DC bus voltage is too low protection |
| EH3b | External Fan DC bus voltage is too high fault |
| EH60 | IDU Room Temperature (T1) Error |
| EH61 | IDU Coil Temperature Sensor (T2) Error |
| EHba | Communication Error between the indoor unit and the external fan module |
| EHC1 | Refrigerant Sensor Detects Leakage |
| EHC2 | Refrigerant Sensor is out of range and a leak is detected |
| EHC3 | Refrigerant Sensor is out of range* |
| EL01 | IDU and ODU Communication Error |
| ELOC | System lacks refrigerant |
| EL11 | Communication Malfunction between the main and secondary units |
| FH07 | IDU lift panel communication failure/IDU opening and closing failure |
| FHCC | Refrigerant Sensor Error* |
| PC00 | ODU IPM Module Protection |
| PC01 | ODU Voltage Protection |
| PC02 | Compressor To (or IPM Module Protection |
| PC03 | Pressure Protection (Low or High Pressure) |
| PC04 | Inverter Compressor Drive Error |
| PCOL | Low Ambient Temperate Protection |
| **NOTE:** The digital tube will display **FC** in the **FORCED COOLING** mode. **FC is NOT an error code.** *Applicable to the units with refrigerant sensors only. | |

## Table 13 — Refrigerant Leak Detection Error Codes

| | |
|---|---|
| EHC1 | Refrigerant Sensor detects a leak |
| EHC2 | Working condition of the refrigerant sensor is out of range and a leak is detected |

If **you receive one of the codes in Table 13, call a technician as soon as possible. No need to panic, the unit goes into TURBO mode until the error code clears. There is a "beeping" noise coming from the indoor unit, which is normal in this case.**

**For additional diagnostic information, refer to the Service Manual.**

# COMMON ISSUES

**Table 14 — Common Issues**

| ISSUE | POSSIBLE CAUSE |
|---|---|
| Unit does not turn on when pressing **ON/OFF**. | The Unit has a 3-minute protection feature that prevents the unit from overloading. The unit cannot be restarted within three minutes of being turned off. |
| The unit changes from **COOL/HEAT** mode to **FAN** mode | The unit may change its setting to prevent frost from forming on the unit. Once the temperature increases, the unit starts operating in the previously selected mode again.<br>The set temperature has been reached, at which point the unit turns o the compressor. The unit continues operating when the temperature fluctuates again. |
| The indoor unit emits white mist | In humid regions, a large temperature difference between the room's air and the conditioned air can cause white mist. |
| Both the indoor and outdoor units emit white mist | When the unit restarts in **HEAT** mode after defrosting, white mist may be emitted due to moisture generated from the defrosting process. |
| The indoor unit makes noises | A rushing air sound may occur when the louver resets its position.<br>A squeaking sound may occur after running the unit in **HEAT** mode due to expansion and contraction of the unit's plastic parts. |
| Both the indoor unit and outdoor unit make noises | Low hissing sound during operation: This is normal and is caused by refrigerant gas flowing through both indoor and outdoor units. |
| | Low hissing sound when the system starts, has just stopped running, or is defrosting: This noise is normal and is caused by the refrigerant gas stopping or changing direction. |
| | Squeaking sound: Normal expansion and contraction of plastic and metal parts caused by temperature changes during operation can cause squeaking noises. |
| The outdoor unit makes noises | The unit makes different sounds based on its current operating mode. |
| Dust is emitted from either the indoor or outdoor unit | The unit may accumulate dust during extended periods of non-use, which emits when the unit is turned on. This can be mitigated by covering the unit during long periods of inactivity. |
| The unit emits a bad odor | The unit may absorb odors from the environment (such as furniture, cooking, cigarettes, etc.) which emit during operations. |
| | The unit's filters have become moldy and should be cleaned. |
| The fan of the outdoor unit does not operate | During operation, the fan speed is controlled to optimize product operation. |
| Operation is erratic, unpredictable, or unit is unresponsive | Interference from cell phone towers and remote boosters may cause the unit to malfunction.<br>In this case, try the following:<br>• Disconnect the power, then reconnect.<br>• Press **ON/OFF** on the remote control to restart operation. |

**NOTE: If problem persists, contact a local dealer or your nearest customer service center. Provide them with a detailed description of the unit malfunction as well as your model number.**

**CAUTION**

When troubles occur, check the following points before contacting a repair company.

**Table 15 — Common Issues**

| PROBLEM | POSSIBLE CAUSES | SOLUTION |
|---|---|---|
| Poor Cooling Performance | Temperature setting may be higher than ambient room temperature | Lower the temperature setting |
| | The heat exchanger on the indoor or outdoor unit is dirty | Use Clean function by remote control to clean the affected heat exchanger |
| | The air filter is dirty | Remove the filter and clean it according to instructions |
| | The air inlet or outlet of either unit is blocked | Turn the unit off, remove the obstruction and turn it back on |
| | Doors and windows are open | Make sure that all doors and windows are closed while operating the unit |
| | Excessive heat is generated by sunlight | Close windows and curtains during periods of high heat or bright sunshine |
| | Too many sources of heat in the room (people, computers, electronics, etc.) | Reduce amount of heat sources |
| | Low refrigerant due to leak or long-term use | Check for leaks, re-seal if necessary and top off refrigerant |
| | **SILENCE** function is activated (optional function) | **SILENCE** function can lower product performance by reducing operating frequency. Turn off **SILENCE** function. |
| The unit is not working | Power failure | Wait for the power to be restored |
| | The power is turned off | Turn on the power |
| | The fuse is burned out | Call service center to replace the fuse |
| | Remote control batteries are dead | Replace batteries |
| | The Unit's 3-minute protection has been activated | Wait three minutes after restarting the unit |
| | Timer is activated | Turn timer off |
| The unit starts and stops frequently | There's too much or too little refrigerant in the system | Call a service center to check for leaks and recharge the system with refrigerant. |
| | Incompressible gas or moisture has entered the system. | Call a service center to evacuate and recharge the system with refrigerant |
| | The compressor is broken | Call a service center to replace the compressor |
| | The voltage is too high or too low | Install a manostat to regulate the voltage |
| Poor heating performance | The outdoor temperature is extremely low | Use auxiliary heating device |
| | Cold air is entering through doors and windows | Ensure all doors and windows are closed during use |
| | Low refrigerant due to leak or long-term use | Call service center to check for leaks, re-seal if necessary and top off refrigerant |
| Indicator lamps continue flashing | The unit may stop operation or continue to run safely. If the indicator lamps continue to flash or error codes appear, wait for about 10 minutes. The problem may resolve itself.<br>If not, disconnect the power, then connect it again. Turn the unit on. If the problem persists, disconnect the power and contact your nearest customer service center. | |
| Error code appears and begins with the letters as the following in the window display of the indoor unit:<br>E(x), P(x), F(x)<br>EH(xx), EL(xx), EC(xx)<br>PH(xx), PL(xx), PC(xx) | | |

**NOTE: If your problem persists after performing the checks and diagnostics above, turn off your unit immediately and contact an authorized service center.**

# DUCTLESS START-UP CHECKLIST - Single Zone

## Installation Data

**Site Address:**_____

**City:**_____ **State:**_____ **Zip Code:**_____

**Installing Contractor**:_____ **Contractor Contact #:** (  ) _____-_____

**Job Name:**_____ **Start-up Date:**_____

**Distributor:**_____

## System Details

| UNITS | MODEL NO. | SERIAL NO. | CONTROLLER |
|---|---|---|---|
| OUTDOOR UNIT | | | |
| INDOOR UNIT A | | | |

Are the outdoor unit and indoor unit compatible? YES:_____ NO:_____

## Wiring Electrical

Wire Size and Type Used? AWG:_____ TYPE:_____

Are there any breaks, splices, wire nuts or butt connectors between the outdoor unit and the indoor unit? YES:_____ NO:_____

Was the wiring from the outdoor unit port to the correct indoor unit verified? YES:_____ NO:_____

**REMARKS:**_____

_____

## Voltage Check

**Wiring: Single Zone**

| | | | | | | |
|---|---|---|---|---|---|---|
| Outdoor Unit Disconnect | 1(L1):GND | | Outdoor Unit Terminal Block | 1(L1):GND | | **NOTES:**_____ |
| | 2(L2):GND | | | 2(L2):GND | | |
| | 1(L1):L2(2) | | | 1(L1):2(L2) | | |
| Indoor Unit Voltage Check @ Outdoor Unit | 1(L1):GND | | Indoor Unit Voltage Check @ Indoor Unit | 1(L1):GND | | **NOTES:**_____ |
| | 2(L2):GND | | | 2(L2):GND | | |
| | 1(L1):2(L2) | | | 1(L1):2(L2) | | |
| | 2(L2):3(S) | | | 2(L2):3(S) | | |

| | | | | | | |
|---|---|---|---|---|---|---|
| Outdoor Unit Disconnect | 1(L1):GND | | Outdoor Unit Terminal Block | 1(L1):GND | | **NOTES:**_____ |
| | 2(L2):GND | | | 2(L2):GND | | |
| | 1(L1):L2(2) | | | 1(L1):2(L2) | | |
| Indoor Unit Voltage Check @ Outdoor Unit | 1(L1):GND | | Indoor Unit Voltage Check @ Indoor Unit | 1(L1):GND | | **NOTES:**_____ |
| | 2(L2):GND | | | 2(L2):GND | | |
| | 1(L1):2(L2) | | | 1(L1):2(L2) | | |
| | 2(L2):3(S) | | | 2(L2):3(S) | | |

© 2024 Carrier. All rights reserved.



**Manufacturer reserves the right to change, at any time, specifications and designs without notice and without obligations.**