EAA5X Series B
Uncased Evaporator Coil forR-454B Refrigerant
1½ thru 5 Ton

Arcoaire®
Air Conditioning & Heating

Product Data

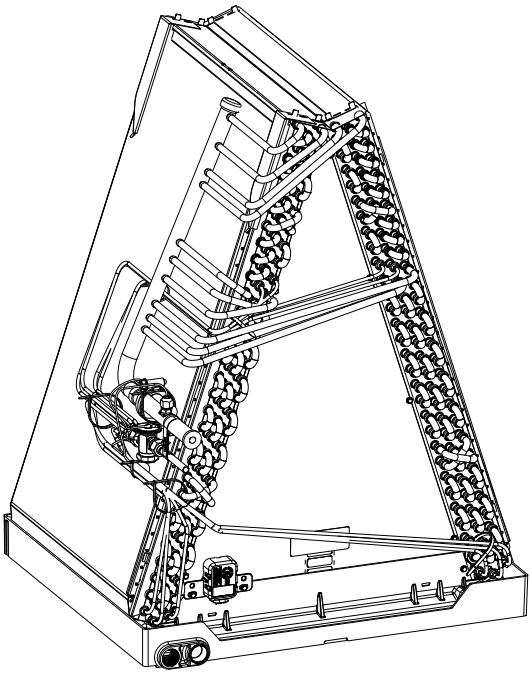

A240150A

Fig. 1 – EAA5X

POWER-V™ TECHNOLOGY

c UL US LISTED

AHRI CERTIFIED www.ahridirectory.org

Use of the AHRI CertifiedTM Mark indicates a manufacturer's participation in the program. For verification of certification for individual products, go to www.ahridirectory.org.

ISO 9001:2000 QMI REGISTERED

A200449AICP

The EAA5X evaporator coil incorporates proven standards for reliable system operation and performance throughout the life of this quality Air Conditioner or Heat Pump system. These quality evaporator coils, manufactured and installed as part of a total comfort system, provide AHRI-rated performance ratings and are additionally listed with UL and c-UL.

This coil is available for use with R-454B Refrigerant only. It is a uncased A-coil that can be housed in any matched pre-installed cabinet or any custom built plenum. This uncased A-coil offers the most in installation application flexibility; one coil for a variety of applications with fewer SKUs to stock.

DESIGN FEATURES

Performance

Designed with performance in mind, this new A-coil offers low pressure drops to enhance system performance and airflow characteristics.

Thermostatic Expansion Valves (TXV)

All coils have refrigerant-specific, factory-installed TXVs.

Durable Condensate Pan

The corrosion-resistant drain pan, for vertical application, is designed in a "fiberglass reinforced thermoset polyester" material (FRTP) that offers unsurpassed pan strength. It is engineered with a proper slope to help ensure water drainage, improved moisture removal, and home comfort.

Refrigerant Connections

Provided with industry proven sweat connections for leak-free operation to maintain system reliability. The side mounting tubing to the coil slabs allows for easy cleaning/servicing of the coils, as well as easy access to the TXV.

Dissipation Sensor

All B series models are shipped with A2L sensor installed. This coil does NOT contain a dissipation control board. If the paired furnace does not have integrated dissipation, a dissipation accessory kit is required. Refer to the gas furnace product data document to determine if the furnace has integrated dissipation. If it does not, refer to coil product data document for information.

Burst Pressure

Meets or exceeds burst pressure of 2100 psi, which is at least three to five times the pressure it would see in actual application.

Serviceability

Comes with a "split delta plate" for easy, quick access to the coil for service and cleaning. Also, after the door is removed, the coil is removable from the front of the unit without use of any tools.

LIMITED WARRANTY

- Default 5-year parts limited warranty:
  - 10-year parts limited warranty with timely registration*. Equipment must be registered within 90 days of original installation, except in jurisdictions where warranty benefits cannot be conditioned on registration.
  - * Applies to original purchaser/homeowner and not available to subsequent owners, except in jurisdictions where laws dictate otherwise.

See Warranty certificate for complete details and restrictions.

MODEL NUMBER NOMENCLATURE

1	2	3	4	5	6	7	8	9	10	11
E	A	A	5	X	2	4	S	1	7	B

Product

E = Evaporator Coil

Coil Type

A = A-Coil

Case Type

A = Uncased

Coil Configuration

5 = R-454B Refrigerant

Metering Device

X = TXV

Unit Capacity

18/19 = 1 1/2 Ton
24/25 = 2 Ton
30 = 2-1/2 Ton
36/37 = 3 Ton
42/43 = 3-1/2 Ton
48 = 4 Ton
60/61 = 5 Ton

Included Equipment

S = Sensor Only

Cabinet Width

14 = 14-in (356 mm)
17 = 17-in (432 mm)
21 = 21-in (536 mm)
24 = 24-in (610 mm)

Major Series

B = B Series

Table 1 – Accessories

PART NUMBER	DESCRIPTION
ACAENCDIS01A	Dissipation Kit — Series A/B Compatible
SYSTXGRPLG10	CNN / Communicating Plug (10-pack)

DIMENSIONS

Table 2 – Dimensions

MODEL #	A (HEIGHT)		B (WIDTH)		C (SUCTION LINE DIAMETER)		OPERATING WEIGHT		SHIPPING WEIGHT		SHIPPING HEIGHT		SHIPPING WIDTH		SHIPPING DEPTH	
	INCH	MM	INCH	MM	INCH	MM	Lbs	Kgs	Lbs	Kgs	INCH	MM	INCH	MM	INCH	MM
EAA5X24M14B	17-3/4	450.8	13	330.2	5/8	15.9	24.5	11.1	28.5	12.9	18-5/8	472.5	15-1/8	384.4	23-3/4	603.1
EAA5X24M17B	17-1/4	438.2	16-5/16	414.4	5/8	15.9	27.0	12.2	31.0	14.1	18-1/8	459.7	18-7/16	468.5	23-3/4	603.1
EAA5X30M14B	21-7/8	555.6	13	330.2	3/4	19.1	29.0	13.2	35.0	15.9	22-3/4	576.9	15-1/8	384.4	23-3/4	603.1
EAA5X30M17B	21-7/16	544.5	16-5/16	414.4	3/4	19.1	29.0	13.2	35.0	15.9	22-1/4	566.0	18-7/16	468.5	23-3/4	603.1
EAA5X36M17B	23-9/16	598.5	16-5/16	414.4	3/4	19.1	32.5	14.7	38.5	17.5	24-3/8	618.9	18-7/16	468.5	23-3/4	603.1
EAA5X37M17B	23-9/16	565.2	16-5/16	414.4	3/4	19.1	30.5	13.8	38.5	17.5	22-1/4	566.0	18-7/16	468.5	23-3/4	603.1
EAA5X42M21B	25-1/16	636.6	19-13/16	503.2	7/8	22.2	34.0	15.4	42.0	19.0	25-15/16	658.5	21-15/16	557.4	23-3/4	603.1
EAA5X48M21B	25-5/16	643.0	19-13/16	503.2	7/8	22.2	43.0	19.5	51.0	23.1	26-3/16	664.4	21-15/16	557.4	23-3/4	603.1
EAA5X60M24B	31-1/16	789.0	23-5/16	592.2	7/8	22.2	51.0	23.1	59.0	26.8	31-7/8	810.1	25-7/16	646.3	23-3/4	603.1
EAA5X61M21B	31-1/2	800.1	19-13/16	503.2	7/8	22.2	55.5	25.2	63.5	28.8	32-3/8	823.0	21-15/16	556.3	23-3/4	603.1

Manufacturer reserves the right to change, at any time, specifications and designs without notice and without obligations.

UNIT	SERIES	A		B (Cabinet Width)		C (Suction Line)		OPERATING WEIGHT		SHIPPING WEIGHT		SHIPPING HEIGHT		SHIPPING WIDTH		SHIPPING DEPTH	
		INCH	MM	INCH	MM	INCH	MM	Lbs	Kgs	Lbs	Kgs	INCH	MM	INCH	MM	INCH	MM
EAA5X24S14B	B	17 3/4	450.8	13	330.2	5/8	15.9	24.5	11.1	28.5	12.9	18.6	472.5	15.1	384.4	23.7	603.1
EAA5X24S17B	B	17 1/4	438.2	16 5/16	414.4	5/8	15.9	27.0	12.2	31.0	14.1	18.1	459.7	18.4	468.5	23.7	603.1
EAA5X30S14B	B	21 7/8	555.6	13	330.2	3/4	19.1	29.0	13.2	35.0	15.9	22.7	576.9	15.1	384.4	23.7	603.1
EAA5X30S17B	B	21 7/16	544.5	16 5/16	414.4	3/4	19.1	29.0	13.2	35.0	15.9	22.3	566.0	18.4	468.5	23.7	603.1
EAA5X36S17B	B	23 9/16	598.5	16 5/16	414.4	3/4	19.1	32.5	14.7	38.5	17.5	24.4	618.9	18.4	468.5	23.7	603.1
EAA5X37S17B	B	22 1/4	565.2	16 5/16	414.4	3/4	19.1	30.5	13.8	38.5	17.5	22.3	566.0	18.4	468.5	23.7	603.1
EAA5X42S21B	B	25 1/16	636.6	19 13/16	503.2	7/8	22.2	34.0	15.4	42.0	19.1	25.9	658.5	21.9	557.4	23.7	603.1
EAA5X48S21B	B	25 5/16	643.0	19 13/16	503.2	7/8	22.2	43.0	19.5	51.0	23.1	26.2	664.4	21.9	557.4	23.7	603.1
EAA5X60S24B	B	31 1/16	789.0	23 5/16	592.2	7/8	22.2	51.0	23.1	59.0	26.8	31.9	810.1	25.4	646.3	23.7	603.1
EAA5X61S21B	B	31 1/2	800.1	19 13/16	503.2	7/8	22.2	55.5	25.2	63.5	28.8	32.4	822.1	21.9	557.4	23.7	603.1

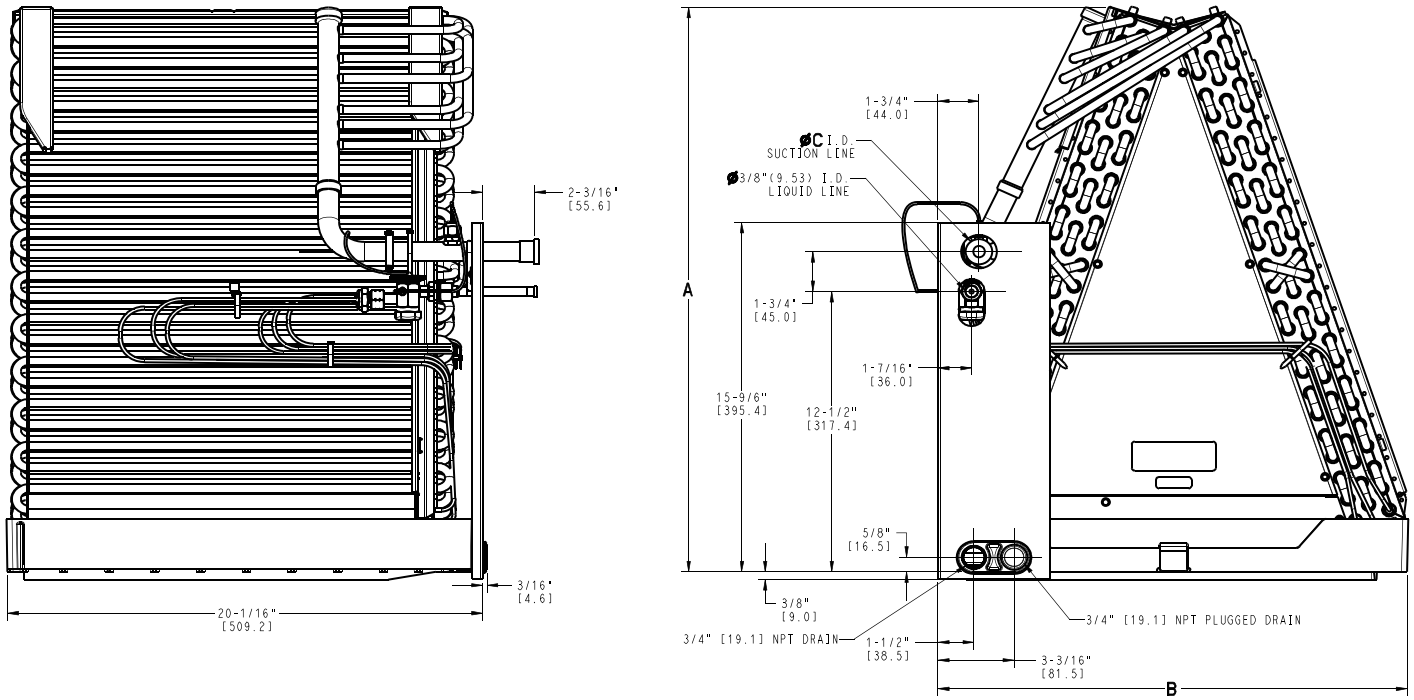

A260401

Fig. 2 – A-Coil, Side and End Views

PERFORMANCE DATA

Table 3 – COOLING CAPACITIES (MBH) - R-454B Refrigerant

INDOOR COIL AIR		SATURATED TEMPERATURE LEAVING EVAPORATOR (deg F)														
		35			40			45			50			55		
CFM	EWB	TC	SHC	BF	TC	SHC	BF	TC	SHC	BF	TC	SHC	BF	TC	SHC	BF
SIZE 2414																
600	72	42.71	20.16	0.00	39.29	18.26	0.00	34.54	16.29	0.12	28.99	14.08	0.07	22.76	11.76	0.05
	67	35.46	21.13	0.05	31.42	19.03	0.08	26.84	17.11	0.05	20.41	14.46	0.04	14.53	12.11	0.05
	62	28.34	21.84	0.04	23.46	19.50	0.04	19.20	17.45	0.05	16.22	15.51	0.11	13.30	13.30	0.24
800	72	50.80	23.51	0.00	45.83	21.58	0.15	40.30	19.32	0.10	33.78	16.90	0.07	26.36	14.20	0.06
	67	42.04	25.31	0.10	37.00	23.11	0.08	31.24	20.69	0.07	25.05	18.24	0.06	17.83	15.38	0.07
	62	33.81	26.81	0.07	28.20	24.28	0.06	23.71	22.13	0.07	20.31	19.30	0.17	15.17	15.17	0.35
1000	72	56.29	26.08	0.00	50.85	24.10	0.16	44.57	21.81	0.10	37.39	19.20	0.08	29.27	16.21	0.10
	67	47.00	28.79	0.13	41.50	26.48	0.11	35.25	23.94	0.10	28.25	21.33	0.09	20.43	18.16	0.10
	62	37.81	31.17	0.08	32.66	28.60	0.10	27.98	26.51	0.10	23.59	23.39	0.21	18.70	18.66	0.36

Manufacturer reserves the right to change, at any time, specifications and designs without notice and without obligations.

Table 3 – COOLING CAPACITIES (MBH) - R-454B Refrigerant (Continued)

INDOOR COIL AIR		SATURATED TEMPERATURE LEAVING EVAPORATOR (deg F)														
		35			40			45			50			55		
CFM	EWB	TC	SHC	BF	TC	SHC	BF	TC	SHC	BF	TC	SHC	BF	TC	SHC	BF
SIZE 2417																
600	72	41.92	20.12	0.00	38.61	18.20	0.00	33.95	16.27	0.13	28.55	14.09	0.07	22.55	11.81	0.05
	67	34.46	21.05	0.02	30.87	19.09	0.06	25.99	16.93	0.05	20.49	14.59	0.05	14.64	12.37	0.03
	62	27.89	21.80	0.04	23.53	19.71	0.03	19.22	17.60	0.04	15.75	15.36	0.11	12.61	12.60	0.27
800	72	49.74	23.54	0.00	45.45	21.50	0.00	40.12	19.32	0.17	33.78	16.96	0.10	26.74	14.37	0.08
	67	40.87	25.28	0.07	36.58	23.09	0.09	30.92	20.70	0.08	24.52	18.05	0.07	17.72	15.43	0.07
	62	33.07	26.69	0.07	28.45	24.57	0.06	23.46	22.14	0.07	19.25	18.55	0.20	16.24	16.24	0.29
1000	72	54.66	26.18	0.17	50.59	24.01	0.00	44.51	21.81	0.16	37.72	19.30	0.12	29.96	16.54	0.10
	67	45.90	28.69	0.12	40.94	26.43	0.12	34.62	23.87	0.10	27.58	21.07	0.10	20.33	18.22	0.10
	62	37.21	31.08	0.09	32.40	28.71	0.09	27.13	26.12	0.10	22.58	21.60	0.26	19.09	19.09	0.33

INDOOR COIL AIR		SATURATED TEMPERATURE LEAVING EVAPORATOR (deg F)														
		35			40			45			50			55		
CFM	EWB	TC	SHC	BF	TC	SHC	BF	TC	SHC	BF	TC	SHC	BF	TC	SHC	BF
SIZE 3014																
750	72	57.03	25.01	0.00	49.74	22.12	0.00	42.73	19.74	0.21	34.16	16.74	0.19	25.10	13.68	0.19
	67	46.11	26.66	0.22	39.31	23.88	0.20	31.62	20.90	0.19	23.57	18.06	0.18	16.77	14.95	0.23
	62	35.94	27.85	0.20	29.79	25.00	0.20	24.22	21.84	0.25	20.39	17.76	0.40	16.11	16.10	0.47
1000	72	66.94	28.61	0.00	58.87	26.21	0.39	49.42	23.06	0.27	39.59	19.71	0.25	28.87	16.22	0.24
	67	53.64	31.31	0.28	45.62	28.32	0.25	36.47	24.91	0.24	27.27	21.65	0.23	20.07	18.02	0.29
	62	42.05	33.66	0.24	35.14	30.20	0.26	29.64	26.28	0.33	24.65	21.39	0.46	19.50	19.50	0.51
1250	72	74.40	31.89	0.00	65.08	29.09	0.40	54.80	25.75	0.32	43.62	22.09	0.29	32.09	18.48	0.28
	67	59.78	35.34	0.32	50.44	31.95	0.30	40.22	28.29	0.28	30.34	24.80	0.27	22.89	20.51	0.35
	62	46.81	38.26	0.28	39.73	35.04	0.29	33.85	30.00	0.38	28.30	24.54	0.50	22.34	22.33	0.55

INDOOR COIL AIR		SATURATED TEMPERATURE LEAVING EVAPORATOR (deg F)														
		35			40			45			50			55		
CFM	EWB	TC	SHC	BF	TC	SHC	BF	TC	SHC	BF	TC	SHC	BF	TC	SHC	BF
SIZE 3017																
750	72	49.74	24.83	0.00	44.62	22.35	0.02	38.79	19.85	0.00	32.47	17.11	0.03	25.63	14.24	0.06
	67	40.63	26.03	0.02	35.63	23.30	0.06	30.08	20.51	0.08	23.63	17.62	0.09	16.94	14.75	0.10
	62	32.84	26.66	0.09	27.63	24.03	0.08	22.30	21.00	0.11	17.63	17.69	0.20	14.32	14.32	0.32
1000	72	60.34	30.13	0.04	54.05	27.13	0.08	47.21	24.09	0.09	39.53	21.00	0.08	31.17	17.60	0.10
	67	49.45	31.92	0.07	43.35	28.64	0.11	36.44	25.42	0.11	28.60	21.98	0.11	20.64	18.56	0.13
	62	39.94	33.09	0.12	33.54	29.92	0.11	27.38	26.48	0.14	22.45	22.18	0.26	18.30	18.29	0.35
1250	72	68.65	34.08	0.20	61.51	30.74	0.18	53.77	27.52	0.15	45.36	24.28	0.12	35.53	20.44	0.13
	67	56.43	36.68	0.12	49.63	33.19	0.14	41.67	29.68	0.14	32.60	25.92	0.13	23.74	21.96	0.15
	62	45.59	38.67	0.14	38.69	35.21	0.14	31.73	31.39	0.17	26.58	26.13	0.30	21.69	21.69	0.38

Manufacturer reserves the right to change, at any time, specifications and designs without notice and without obligations.

Table 3 – COOLING CAPACITIES (MBH) - R-454B Refrigerant (Continued)

INDOOR COIL AIR		SATURATED TEMPERATURE LEAVING EVAPORATOR (deg F)														
		35			40			45			50			55		
CFM	EWB	TC	SHC	BF	TC	SHC	BF	TC	SHC	BF	TC	SHC	BF	TC	SHC	BF
SIZE 3617																
900	72	58.80	29.94	0.00	52.66	27.09	0.01	45.84	24.01	0.04	38.24	20.53	0.10	29.94	16.93	0.15
	67	48.62	31.72	0.09	42.61	28.28	0.14	35.48	24.68	0.16	27.95	21.14	0.18	19.84	17.53	0.20
	62	39.51	32.39	0.17	33.23	29.17	0.17	26.73	25.43	0.20	21.09	21.19	0.29	17.63	17.63	0.37
1200	72	70.59	36.27	0.02	63.15	32.65	0.08	55.17	28.97	0.12	46.11	25.02	0.15	36.21	20.86	0.18
	67	58.47	38.44	0.15	51.26	34.50	0.18	42.95	30.49	0.19	33.55	26.24	0.20	24.14	22.04	0.22
	62	47.54	39.93	0.20	40.00	36.14	0.20	32.59	31.96	0.22	26.59	26.08	0.36	21.50	21.49	0.42
1500	72	79.63	40.70	0.13	71.33	36.90	0.15	62.40	32.97	0.17	52.62	28.83	0.19	41.19	24.19	0.21
	67	66.00	43.75	0.20	58.14	39.75	0.21	48.73	35.42	0.22	38.08	30.96	0.21	27.66	25.99	0.25
	62	53.82	46.64	0.22	45.77	42.24	0.23	37.68	37.43	0.26	31.20	30.54	0.40	25.34	25.33	0.45

INDOOR COIL AIR		SATURATED TEMPERATURE LEAVING EVAPORATOR (deg F)														
		35			40			45			50			55		
CFM	EWB	TC	SHC	BF	TC	SHC	BF	TC	SHC	BF	TC	SHC	BF	TC	SHC	BF
SIZE 3717																
900	72	66.65	33.05	0.00	60.93	30.22	0.04	54.05	27.10	0.03	46.03	23.74	0.02	36.90	20.08	0.03
	67	55.27	34.55	0.00	49.07	31.31	0.03	41.77	27.91	0.03	33.81	24.16	0.05	25.02	20.56	0.05
	62	44.68	35.50	0.02	38.53	32.39	0.02	30.99	28.42	0.05	24.88	24.59	0.12	20.28	20.28	0.26
1200	72	81.37	39.91	0.00	74.09	36.64	0.00	65.83	33.17	0.08	56.34	29.38	0.05	45.34	25.20	0.04
	67	67.35	42.43	0.05	59.96	38.95	0.05	51.39	35.14	0.04	41.35	30.84	0.04	30.11	26.07	0.06
	62	54.64	44.55	0.04	47.11	40.76	0.04	38.25	36.01	0.07	31.46	31.03	0.17	26.37	26.37	0.28
1500	72	91.04	45.18	0.16	84.13	41.81	0.21	75.03	38.15	0.11	64.27	34.13	0.07	51.94	29.58	0.06
	67	76.61	49.14	0.07	68.41	45.44	0.06	58.82	41.32	0.05	47.61	36.71	0.05	34.77	31.00	0.08
	62	62.41	52.52	0.05	54.01	48.12	0.06	44.96	43.20	0.09	37.59	36.80	0.21	31.09	31.05	0.32

INDOOR COIL AIR		SATURATED TEMPERATURE LEAVING EVAPORATOR (deg F)														
		35			40			45			50			55		
CFM	EWB	TC	SHC	BF	TC	SHC	BF	TC	SHC	BF	TC	SHC	BF	TC	SHC	BF
SIZE 4221																
1050	72	78.40	36.36	0.22	68.20	31.94	0.27	57.99	27.82	0.30	46.52	23.44	0.32	34.24	19.06	0.33
	67	63.71	37.89	0.33	53.85	33.58	0.34	43.19	29.22	0.34	31.92	25.03	0.34	22.03	19.92	0.40
	62	50.25	39.90	0.33	41.12	34.98	0.36	33.36	29.77	0.43	27.10	23.56	0.55	21.00	20.99	0.59
1400	72	91.12	41.84	0.34	79.56	37.18	0.35	67.22	32.53	0.35	53.61	27.50	0.37	39.38	22.57	0.37
	67	73.95	44.58	0.38	62.18	39.66	0.38	49.76	34.77	0.38	36.63	29.75	0.38	26.49	23.80	0.46
	62	58.06	47.35	0.38	48.14	42.11	0.40	40.09	35.60	0.48	32.74	28.59	0.58	25.30	25.29	0.62
1750	72	100.61	46.28	0.40	88.04	41.37	0.40	74.33	36.44	0.39	59.32	30.95	0.40	43.14	25.43	0.41
	67	81.97	50.23	0.42	69.11	45.00	0.42	55.05	39.62	0.41	40.81	33.97	0.42	30.02	26.93	0.51
	62	64.42	53.63	0.42	54.08	47.83	0.45	45.72	40.31	0.53	37.76	33.49	0.60	28.91	28.90	0.65

Table 3 – COOLING CAPACITIES (MBH) - R-454B Refrigerant (Continued)

INDOOR COIL AIR		SATURATED TEMPERATURE LEAVING EVAPORATOR (deg F)														
		35			40			45			50			55		
CFM	EWB	TC	SHC	BF	TC	SHC	BF	TC	SHC	BF	TC	SHC	BF	TC	SHC	BF
SIZE 4821																
1200	72	82.04	40.07	0.00	75.60	36.07	0.00	66.14	32.53	0.00	56.22	28.73	0.13	44.82	24.36	0.09
	67	68.03	42.46	0.14	60.16	38.58	0.12	51.08	34.62	0.09	40.72	30.15	0.08	29.23	25.40	0.08
	62	54.60	44.52	0.08	46.59	40.50	0.08	37.39	35.62	0.10	30.81	30.90	0.18	24.92	24.92	0.30
1600	72	97.29	45.49	0.00	87.98	42.49	0.00	77.77	38.70	0.25	66.15	34.31	0.16	52.92	29.43	0.13
	67	79.77	50.48	0.18	70.77	46.47	0.15	60.33	42.02	0.12	48.42	37.06	0.11	34.93	31.41	0.12
	62	64.42	54.16	0.12	55.23	49.58	0.12	45.52	44.47	0.13	37.90	37.73	0.25	31.75	31.75	0.33
2000	72	106.47	50.88	0.00	97.26	47.53	0.00	86.30	43.51	0.24	73.62	38.88	0.18	59.03	33.65	0.16
	67	88.47	57.11	0.20	78.71	52.97	0.17	67.27	48.25	0.15	54.09	42.91	0.14	39.65	36.78	0.16
	62	71.67	62.45	0.14	61.88	57.22	0.15	52.51	52.34	0.17	44.33	43.77	0.30	37.31	37.31	0.37

INDOOR COIL AIR		SATURATED TEMPERATURE LEAVING EVAPORATOR (deg F)														
		35			40			45			50			55		
CFM	EWB	TC	SHC	BF	TC	SHC	BF	TC	SHC	BF	TC	SHC	BF	TC	SHC	BF
SIZE 6024																
1500	72	106.04	51.76	0.00	95.27	46.50	0.00	82.97	41.13	0.18	69.58	35.69	0.09	54.31	29.74	0.08
	67	86.48	54.03	0.10	75.60	48.69	0.08	63.39	42.81	0.09	49.88	36.91	0.08	35.17	30.64	0.10
	62	68.57	55.62	0.07	57.67	49.76	0.09	46.75	43.90	0.11	37.68	37.72	0.18	30.68	30.68	0.30
2000	72	127.46	61.02	0.00	114.85	56.03	0.00	100.44	50.33	0.15	83.66	43.70	0.11	64.87	36.39	0.10
	67	104.42	65.55	0.15	91.43	59.54	0.13	76.54	52.85	0.12	59.95	45.84	0.11	42.58	38.67	0.12
	62	83.69	68.68	0.12	70.34	62.14	0.11	56.53	54.88	0.13	47.35	47.18	0.23	37.24	37.24	0.36
2500	72	144.87	68.38	0.00	129.80	63.34	0.00	113.88	57.34	0.19	95.13	50.25	0.14	73.98	42.26	0.13
	67	118.40	75.16	0.18	104.04	68.73	0.16	87.74	61.70	0.15	68.54	53.91	0.13	48.95	45.54	0.15
	62	95.41	80.19	0.15	80.55	72.86	0.14	66.30	65.12	0.17	57.24	53.79	0.33	43.33	43.33	0.40

INDOOR COIL AIR		SATURATED TEMPERATURE LEAVING EVAPORATOR (deg F)														
		35			40			45			50			55		
CFM	EWB	TC	SHC	BF	TC	SHC	BF	TC	SHC	BF	TC	SHC	BF	TC	SHC	BF
SIZE 6121																
1500	72	112.11	55.08	0.00	101.70	49.99	0.02	89.58	44.70	0.00	75.64	39.01	0.00	60.50	32.81	0.03
	67	92.62	57.34	0.00	81.73	51.72	0.03	69.28	45.84	0.04	55.22	39.68	0.04	40.13	33.48	0.05
	62	74.69	58.45	0.04	63.29	52.60	0.05	51.17	46.56	0.06	40.87	39.92	0.14	33.94	33.93	0.27
2000	72	136.71	66.82	0.00	123.80	60.91	0.11	109.34	54.72	0.07	93.11	48.24	0.05	74.27	41.10	0.05
	67	113.10	70.55	0.05	100.14	64.26	0.06	85.10	57.60	0.05	67.64	50.26	0.05	49.20	42.68	0.06
	62	91.55	73.55	0.05	77.91	66.58	0.06	63.46	59.20	0.08	52.22	50.85	0.18	42.81	42.72	0.31
2500	72	155.68	76.12	0.00	141.46	69.96	0.13	125.41	63.39	0.10	106.83	56.23	0.07	85.68	48.45	0.06
	67	129.41	81.91	0.08	114.66	75.25	0.07	97.99	67.94	0.07	78.43	59.92	0.06	57.24	51.14	0.08
	62	104.93	86.59	0.07	90.39	79.22	0.08	74.33	70.77	0.10	62.17	59.97	0.23	51.13	51.02	0.34

Definitions

EWB - Entering Wet Bulb (°F)
TC - Total Cooling Capacity (1000 Btuh)
MBH - 1000 Btuh
CFM - Cubic Feet Per Minute
LWB - Leaving Wet Bulb (°F)
BF - Bypass Factor
SNC - Sensible Heat Capacities (1000 Btuh)

Manufacturer reserves the right to change, at any time, specifications and designs without notice and without obligations.

Coil Static Pressure Drop (IN. WC.) - R-454B Refrigerant

Table 4 – COIL STATIC PRESSURE DROP (IN. WC.) - R-454B REFRIGERANT

Unit Size	STANDARD CFM																		
	400	500	600	700	800	900	1000	1100	1200	1300	1400	1500	1600	1700	1800	1900	2000	2100	2200
2414	Dry																		
	0.065	0.091	0.120	0.154	0.194	0.237	0.284												
	Wet																		
	0.066	0.094	0.124	0.161	0.203	0.250	0.301												
2417	Dry																		
	0.056	0.076	0.097	0.123	0.151	0.182	0.215												
	Wet																		
	0.060	0.082	0.105	0.132	0.163	0.195	0.231												
3014	Dry																		
	0.054	0.077	0.102	0.133	0.167	0.206	0.248	0.296	0.347										
	Wet																		
	0.059	0.084	0.111	0.142	0.181	0.223	0.269	0.319	0.375										
3017	Dry																		
	0.043	0.059	0.077	0.096	0.119	0.144	0.171	0.201	0.232										
	Wet																		
	0.046	0.063	0.083	0.105	0.130	0.157	0.186	0.219	0.252										
3617	Dry																		
	0.023	0.036	0.052	0.069	0.089	0.110	0.135	0.160	0.189	0.219	0.251								
	Wet																		
	0.042	0.058	0.076	0.095	0.117	0.142	0.169	0.198	0.231	0.265	0.299								
3717	Dry																		
	0.077	0.099	0.124	0.152	0.182	0.216	0.253	0.294	0.338										
	Wet																		
	0.088	0.113	0.137	0.170	0.209	0.247	0.287	0.326	0.368										
4221	Dry																		
			0.044	0.056	0.068	0.082	0.099	0.119	0.138	0.161	0.183	0.205	0.233						
	Wet																		
			0.058	0.073	0.089	0.106	0.125	0.143	0.165	0.189	0.213	0.239	0.268						
4821	Dry																		
			0.055	0.072	0.089	0.107	0.128	0.150	0.175	0.199	0.228	0.257	0.288	0.321	0.356				
	Wet																		
			0.058	0.075	0.094	0.115	0.136	0.161	0.188	0.217	0.247	0.279	0.313	0.347	0.386				
6024	Dry																		
					0.073	0.083	0.095	0.107	0.120	0.136	0.152	0.169	0.184	0.203	0.217	0.238	0.260	0.283	0.307
	Wet																		
					0.076	0.086	0.098	0.110	0.124	0.140	0.157	0.175	0.193	0.215	0.238	0.261	0.286	0.314	0.342
6121	Dry																		
						0.111	0.133	0.153	0.163	0.204	0.234	0.262	0.293	0.326	0.366	0.392	0.437	0.48	0.52
	Wet																		
						0.13	0.15	0.183	0.21	0.245	0.28	0.32	0.355	0.4	0.435	0.48	0.525	0.57	0.63

Manufacturer reserves the right to change, at any time, specifications and designs without notice and without obligations.

Cooling Capacity Notes

NOTE:

1. Contact manufacturer for cooling capacities at conditions other than shown in the table.
2. Formulas:
   Leaving db = entering db - $\frac{\text{sensible heat cap}}{1.09 \times \text{CFM}}$.
   Leaving wb = wb corresponding to enthalpy of air leaving coil (hlwb)
   $$\text{hlwb} = \text{hewb} - \frac{\text{total capacity (Btuh)}}{4.5 \times \text{CFM}}$$
   Where hewb = enthalpy of air entering coil.
   Direct interpolation is permissible. Do not extrapolate.
3. SHC is based on 80°F (27°C) db temperature of air entering coil. Below 80°F (27°C) db, subtract (Correction Factor x CFM) from SHC.
   Above 80_F (27°C) db, add (Correction Factor x CFM) to SHC.
4. Bypass Factor = 0 indicates no psychometric solution. Use bypass factor of next lower EWB for approximation.
5. Fan motor heat has not been deducted.
6. All data points are based on 10°F superheat leaving coil and use of thermostatic expansion valve (TXV) device.
7. All units have sweat suction-tube connection and a liquid-tube connection. For 1-1/8-in. system suction tube, 3/4 x 1-1/8 in. suction tube connection adapter is available as accessory.
8. The WLAU**4 coils can be used in any properly designed system using R-410A refrigerant.
9. The WLAU**2 coils can be used in any properly designed system using R-22 refrigerant.
10. Before using maximum CFM shown in table, check coil static pressure drop to ensure system blower can provide necessary static pressure needed for coil and duct systems.
11. Bypass Factor = 0 indicates no psychometric solution. Use bypass factor of next lower EWB for approximation.

BYPASS FACTOR	ENTERING AIR DRY BULB TEMPERATURE °F					
	79	78	77	76	75	Under 75
	81	82	83	84	84	Above 85
	Correction Factor					
010	0.98	1.96	2.94	3.92	4.91	Use formula shown below
0.20	0.87	1.74	2.62	3.49	4.36	
0.30	0.76	1.53	2.29	3.05	3.82	

Interpolation is permissible.
Correction Factor = 1.09 x (1 - BF) x (db - 80)

©2026 Carrier. All rights reserved.

Manufacturer reserves the right to change, at any time, specifications and designs without notice and without obligations.