EVD4X, ESD4X
Evaporator Coil with Power-V Technology
Upflow/Downflow
AC Only

Arcoaire®
Air Conditioning & Heating

Product Data

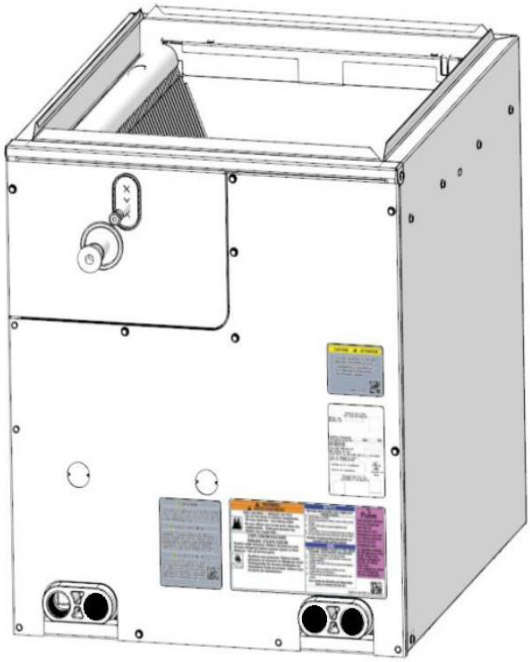

Fig. 1 – Typical Coil

A210758

This evaporator coil incorporates proven standards for reliable system operation and performance throughout the life of this product. These quality coils, manufactured and installed as part of a total comfort system, provide AHRI-rated performance ratings and are additionally listed with UL and c-UL.

Available for use in R-410A refrigerant only, it is a cased V-coil or slope coil that is housed in a durable, 24-gauge, pre-painted cool gray cabinet. The fully insulated cabinet (foil faced with R-2.1 insulation) provides for quiet efficient operation of the evaporator coil.

IMPORTANT: This design is for AC applications only.

DESIGN FEATURES

Performance — Designed with performance in mind, this new evaporator coil offers lower pressure drops to enhance system performance and airflow characteristics.

Thermostatic Expansion Valves (TXV) — All coils have refrigerant-specific, factory-installed TXVs. All models are factory pre-set to approximately 10° of superheat at the suction service valve.

Durable Condensate Pan — The corrosion-resistant drain pan is designed of a "Polybutylene terephthalate" material (PBT) that offers unsurpassed pan strength. It is engineered with proper slope to help ensure water drainage, improved moisture removal, and home comfort.

Condensate Drain Pan Plugs — The drain pan is supplied with three water-tight drain plugs to prevent leakage from unused drain connections.

Refrigerant Connections — Provided with industry proven sweat connections for leak-free operation to maintain system reliability. The location of the lineset connections allows for removal of the access door for easy cleaning/servicing of the coils, as well as easy access to the TXV. All models come from the factory with enough length of straight tube—once the pipe swages are cut off—to accommodate braze-less compression fittings.

Burst Pressure — Meets or exceeds burst pressure of 1900 psi, which is at least three times the maximum operating pressure it would see in actual cooling-only application.

UV Knockout — This cased coil comes with factory-installed UV knockouts for quick and easy installation of UV lights.

Serviceability — Comes with a "no delta plate" for easy, quick access to both sides of the coil for service and cleaning. Also, after the door is removed and refrigerant lines disconnected, the coil is removable from the front of the unit without the use of any tools.

MODEL NUMBER NOMENCLATURE

1	2	3	4	5	6	7	8	9	10	11
E	V	D	4	X	3	6	M	1	7	A

Product Description

E = Evaporator Coil (cooling only)

Type

V = V-Coil
S = Slope Coil

Installation Configuration
D = Vertical; M = Multi-poise

Refrigerant Type
4 = R-410A

Metering Device

X = TXV

Unit Capacity (Nom.)

18 - 23 = 1.5 Ton
24 - 29 = 2 Ton
30 - 35 = 2.5 Ton
36 - 41 = 3 Ton
42 - 47 = 3.5 Ton
48 - 51 = 4 Ton
60 - 62 = 5 Ton

Hairpin Materials

M = Microchannel

Unit Width (Nom.)
14 = 14-in (325 mm)
17 = 17-in (432 mm)
21 = 21-in (533 mm)
24 = 24-in (610 mm)

Major Series
A = First
B = Second
Etc...

Use of the AHRI CertifiedTM Mark indicates a manufacturer's participation in the program. For verification of certification for individual products, go to www.ahridirectory.org.

ISO 9001:2000

A200449ICP

Table 1 – Accessories

Part Number	Description
NAHB00101CA	Coil Adapter Kits - No Offset
NAHB00201CA	Coil Adapter Kits - Single Offset
NAHB00301CA	Coil Adapter Kits - Double Offset

Table 2 – Coil Connections / Orientations

Model	Nom. Tons	Line Set Connection Tube Size, in.		Flush Fit to Furnace Width, in. (mm)	Fits Next Smaller Furnace Width			90° Rotation to Furnace (4" Min. Transition Required)	180° Rotation to Furnace
		Suction	Liquid		Equal Overhang	Offset Left	Offset Right		
ESD4X24M14A	2	3/4	3/8	14-3/16 (360)				ALL Upflow or Downflow	
EVD4X18M14A	1.5	3/4	3/8	14-3/16 (360)					
EVD4X19M17A	1.5	3/4	3/8	17-1/2 (445)	X	X	X		
EVD4X24M14A	2	3/4	3/8	14-3/16 (360)					
EVD4X24M17A	2	3/4	3/8	17-1/2 (445)	X	X	X		
EVD4X25M17A	2	3/4	3/8	17-1/2 (445)	X	X	X		
EVD4X30M14A	2.5	3/4	3/8	14-3/16 (360)					
EVD4X30M17A	2.5	3/4	3/8	17-1/2 (445)	X	X	X		
EVD4X31M17A	2.5	3/4	3/8	17-1/2 (445)	X	X	X		
EVD4X36M17A	3	3/4	3/8	17-1/2 (445)	X	X	X		
EVD4X36M21A	3	3/4	3/8	21 (533)	X	X	X		
EVD4X37M21A	3	3/4	3/8	21 (533)	X	X	X		
EVD4X38M17A	3	3/4	3/8	17-1/2 (445)	X	X	X		
EVD4X42M17A	3.5	7/8	3/8	17-1/2 (445)	X	X	X		
EVD4X42M21A	3.5	7/8	3/8	21 (533)	X	X	X		
EVD4X42M24A	3.5	7/8	3/8	24-1/2 (622)	X	X	X		
EVD4X48M21A	4	7/8	3/8	21 (533)	X	X	X		
EVD4X48M24A	4	7/8	3/8	24-1/2 (622)	X	X	X		
EVD4X49M24A	4	7/8	3/8	24-1/2 (622)	X	X	X		
EVD4X60M24A	5	7/8	3/8	24-1/2 (622)	X	X	X		
EVD4X61M24A	5	7/8	3/8	24-1/2 (622)	X	X	X		

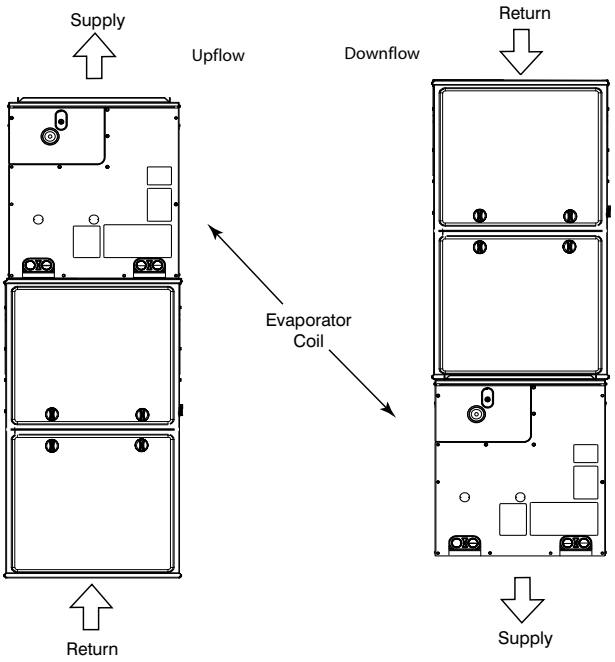

A200227B

Fig. 2 – Typical Flush-Fit Coil Installation on Furnace (recommended)

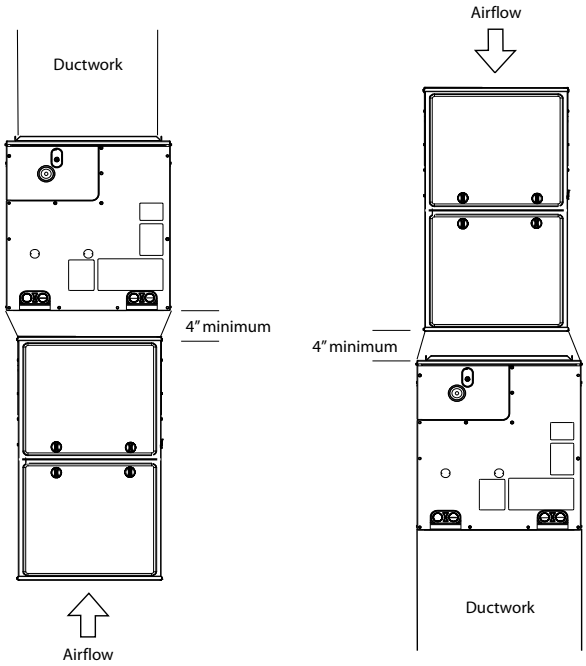

A200228B

Fig. 3 – Adapter(s) Installation When Coil is Larger than Furnace (recommended)

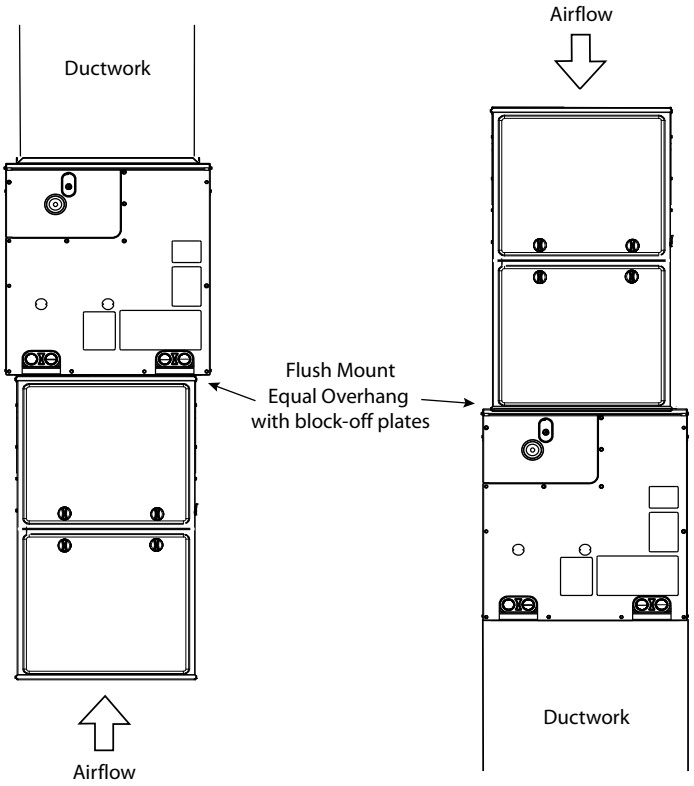

A221112

Fig. 4 – Smaller Furnace, Equal Overhang, Flush Mount (not recommended)

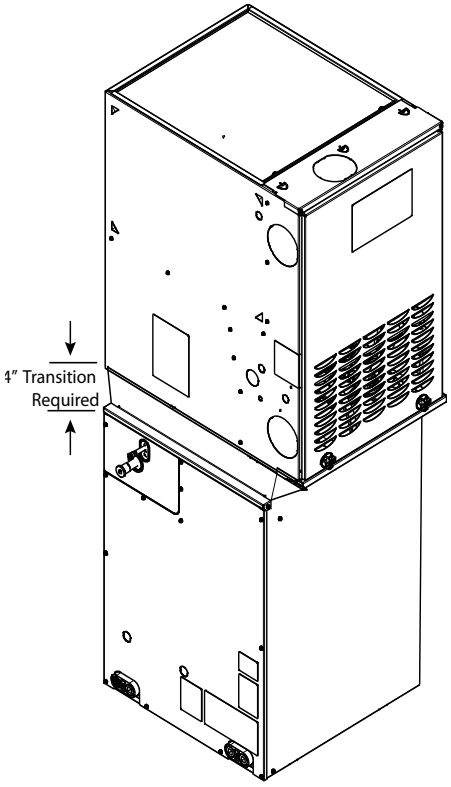

A221110

Fig. 6 – 90° Rotation (shown in downflow) 4" Transition Required (not recommended)

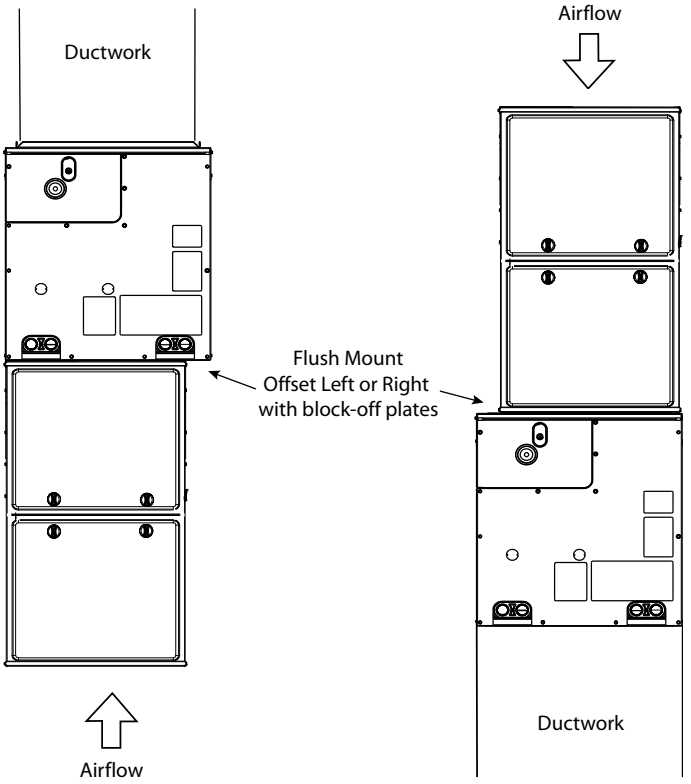

A221113

Fig. 5 – Smaller Furnace, Offset, Flush Mount Right or Left (not recommended)

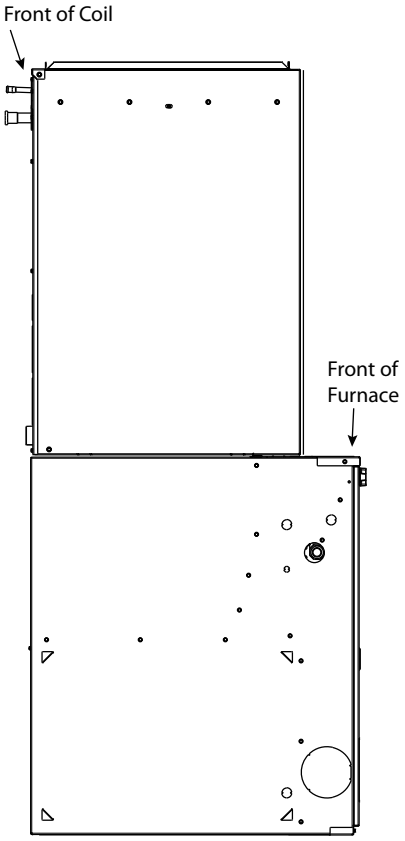

A221111

Fig. 7 – 180° Rotation (shown in upflow) (not recommended)

DIMENSIONS

UNIT	SERIES	A		B (Cabinet Width)		C		D		E		F		H (Suction Line)		OPERATING WEIGHT		SHIPPING WEIGHT		SHIPPING HEIGHT		SHIPPING WIDTH		SHIPPING DEPTH	
		INCH	MM	INCH	MM	INCH	MM	INCH	MM	INCH	MM	INCH	MM	INCH	MM	Lbs	Kgs	Lbs	Kgs	INCH	MM	INCH	MM	INCH	MM
EVD4X18M14A	1	14 11/16	372.4	14 3/16	360.4	12 7/16	316.2	13 3/16	335.2	11 5/8	294.8	7 1/8	180.2	3/4	19.1	23.6	10.7	28	12.7	16.0	406.4	16.3	414.0	23.8	604.5
EVD4X19M17A	1	19 7/16	494.5	17 1/2	444.5	15 3/4	400.3	17 5/16	440.4	15 11/16	398.7	8 3/4	222.3	3/4	19.1	31.2	14.2	37	16.8	20.7	525.8	19.6	497.8	23.8	604.5
EVD4X24M14A	1	14 11/16	372.4	14 3/16	360.4	12 7/16	316.2	13 3/16	335.2	11 5/8	294.8	7 1/8	180.2	3/4	19.1	23.6	10.7	28	12.7	16.0	406.4	16.3	414.0	23.8	604.5
EVD4X24M17A	1	14 11/16	372.4	17 1/2	444.5	15 3/4	400.3	13 3/16	335.2	11 5/8	294.8	8 3/4	222.3	3/4	19.1	31.2	14.2	37	16.8	16.0	406.4	19.6	497.8	23.8	604.5
EVD4X25M17A	1	19 7/16	494.5	17 1/2	444.5	15 3/4	400.3	17 5/16	440.4	15 11/16	398.7	8 3/4	222.3	3/4	19.1	31.2	14.2	37	16.8	20.7	525.8	19.6	497.8	23.8	604.5
EVD4X30M14A	1	17 1/16	432.6	14 3/16	360.4	12 7/16	316.2	14 15/16	380.2	14	355.0	7 1/8	180.2	3/4	19.1	26.1	11.8	31.0	14.1	18.4	467.4	16.3	414.0	23.8	604.5
EVD4X30M17A	1	19 7/16	494.5	17 1/2	444.5	15 3/4	400.3	17 5/16	440.4	15 11/16	398.7	8 3/4	222.3	3/4	19.1	31.2	14.2	37	16.8	20.7	525.8	19.6	497.8	23.8	604.5
EVD4X31M17A	1	25 13/16	656.4	17 1/2	444.5	15 3/4	400.3	24 3/16	614.2	22 13/16	578.8	8 3/4	222.3	3/4	19.1	37.0	16.8	44	20.0	27.1	688.3	19.6	497.8	23.8	604.5
EVD4X36M17A	1	19 7/16	494.5	17 1/2	444.5	15 3/4	400.3	17 5/16	440.4	15 11/16	398.7	8 3/4	222.3	3/4	19.1	31.2	14.2	37	16.8	20.7	525.8	19.6	497.8	23.8	604.5
EVD4X38M17A	1	29 3/4	755.3	17 1/2	444.5	15 3/4	400.3	27 3/4	704.9	26 11/16	677.7	8 3/4	222.3	3/4	19.1	41.3	18.7	49	22.2	31.0	787.4	19.6	497.8	23.8	604.5
EVD4X42M17A	1	19 1/4	489.1	17 1/2	444.5	15 3/4	400.3	19 1/8	485.9	18 1/16	459.1	8 3/4	222.3	7/8	22.2	32.0	14.5	38	17.2	22.5	571.5	19.6	497.8	23.8	604.5

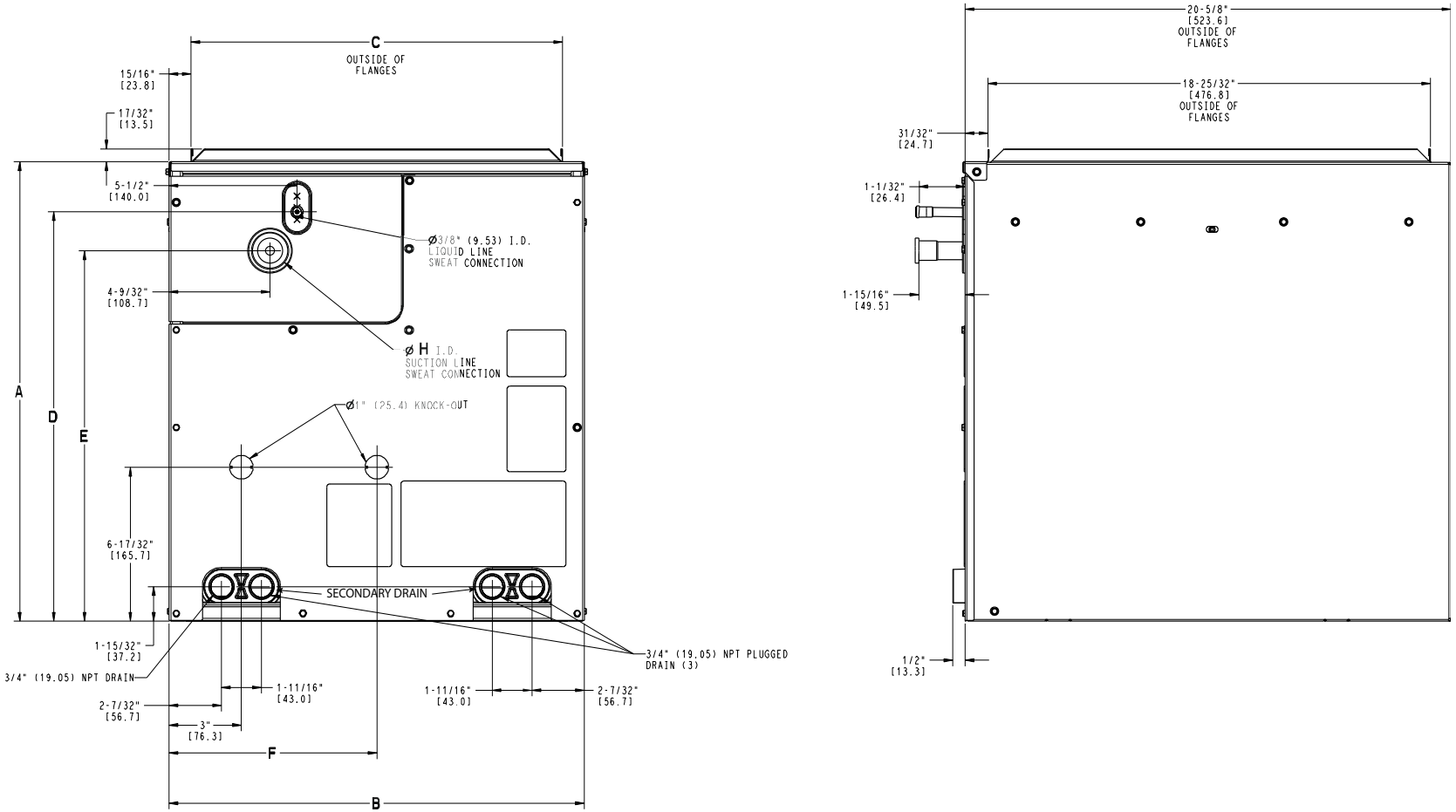

A210759

Fig. 8 – EVD4X (14" & 17" cabinet widths)

DIMENSIONS (cont)

UNIT	SERIES	A		B (Cabinet Width)		C		D		E		F		H (Suction Line)		OPERATING WEIGHT		SHIPPING WEIGHT		SHIPPING HEIGHT		SHIPPING WIDTH		SHIPPING DEPTH	
		INCH	MM	INCH	MM	INCH	MM	INCH	MM	INCH	MM	INCH	MM	INCH	MM	Lbs	Kgs	Lbs	Kgs	INCH	MM	INCH	MM	INCH	MM
EVD4X36M21A	1	19 1/16	483.4	21	533.4	19 1/4	489.2	16 7/8	427.9	16	405.8	10 1/2	266.7	3/4	19.1	32.0	14.5	38.0	17.2	20.4	518.2	23.1	586.7	23.8	604.5
EVD4X37M21A	1	21 15/16	557.9	21	533.4	19 1/4	489.2	20 1/16	510.0	18 5/16	465.0	10 1/2	266.7	3/4	19.1	35.4	16.1	42.0	19.1	23.5	596.9	23.1	586.7	23.8	604.5
EVD4X42M21A	1	19 1/16	483.4	21	533.4	19 1/4	489.2	16 7/8	427.9	16	405.8	10 1/2	266.7	7/8	22.2	32.0	14.5	38.0	17.2	20.4	518.2	23.1	586.7	23.8	604.5
EVD4X42M24A	1	26 5/16	669.0	24 1/2	622.3	22 3/4	578.1	24 3/4	629.3	23 5/16	591.4	12 1/4	311.2	7/8	22.2	41.3	18.7	49.0	22.2	27.7	703.6	26.6	675.6	23.8	604.5
EVD4X48M21A	1	21 15/16	557.9	21	533.4	19 1/4	489.2	20 1/16	510.0	18 5/16	465.0	10 1/2	266.7	7/8	22.2	35.4	16.1	42.0	19.1	23.5	596.9	23.1	586.7	23.8	604.5
EVD4X48M24A	1	22 1/16	560.8	24 1/2	622.3	22 3/4	578.1	20 3/16	513.4	19	483.2	12 1/4	311.2	7/8	22.2	37.0	16.8	44.0	20.0	23.5	596.9	26.6	675.6	23.8	604.5
EVD4X49M24A	1	26 5/16	669.0	24 1/2	622.3	22 3/4	578.1	24 5/16	616.9	22 9/16	573.2	12 1/4	311.2	7/8	22.2	41.3	18.7	49.0	22.2	27.7	703.6	26.6	675.6	23.8	604.5
EVD4X60M24A	1	26 5/16	669.0	24 1/2	622.3	22 3/4	578.1	24 3/4	629.3	23 5/16	591.4	12 1/4	311.2	7/8	22.2	41.3	18.7	49.0	22.2	27.7	703.6	26.6	675.6	23.8	604.5
EVD4X61M24A	1	35	889.6	24 1/2	622.3	22 3/4	578.1	33 7/16	850.0	31 1/4	793.8	12 1/4	311.2	7/8	22.2	53.9	24.4	64.0	29.0	36.3	922.0	26.6	675.6	23.8	604.5

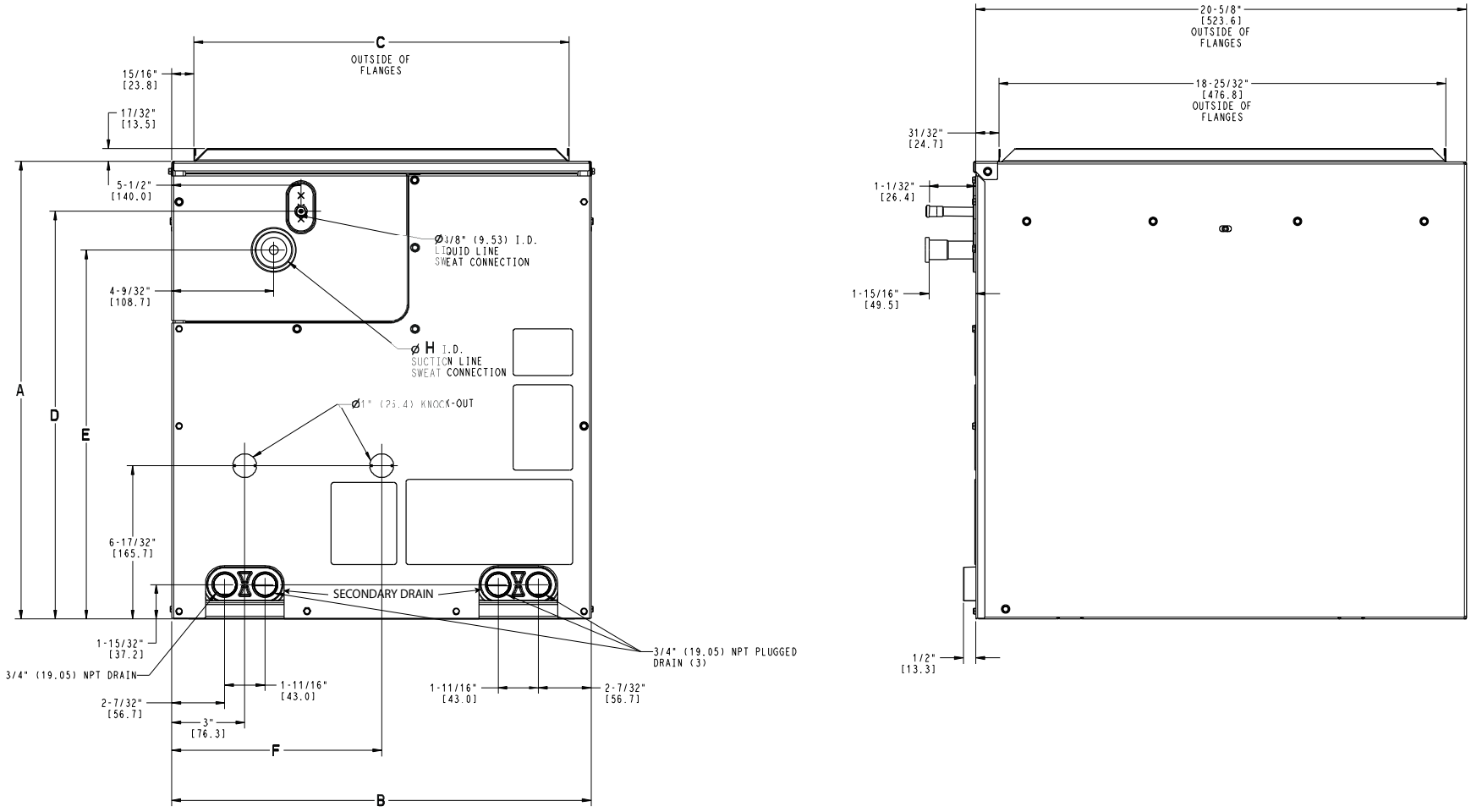

Fig. 9 – EVD4X (21" & 24" cabinet widths)

DIMENSIONS (cont)

UNIT	SERIES	A (Cabinet Width)		B		OPERATING WEIGHT		SHIPPING WEIGHT		SHIPPING HEIGHT		SHIPPING WIDTH		SHIPPING DEPTH	
		INCH	MM	INCH	MM	Lbs	Kgs	Lbs	Kgs	INCH	MM	INCH	MM	INCH	MM
ESD4X24M14A	1	14 3/16	360.4	12 7/16	316.2	23.6	10.7	28.0	12.7	27.1	688.3	16.3	414.0	23.8	604.5

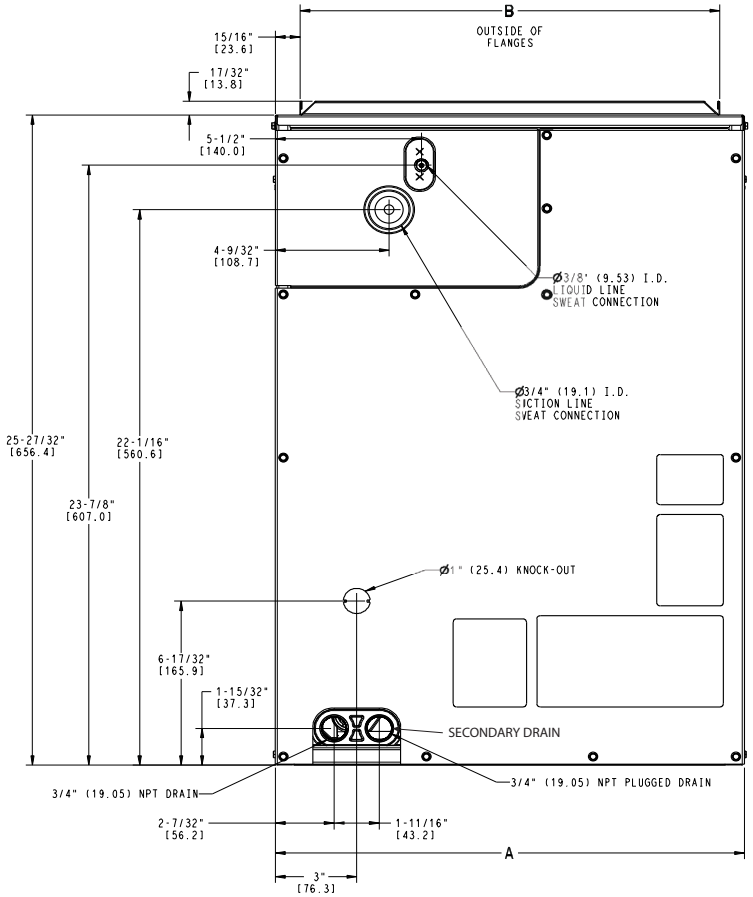

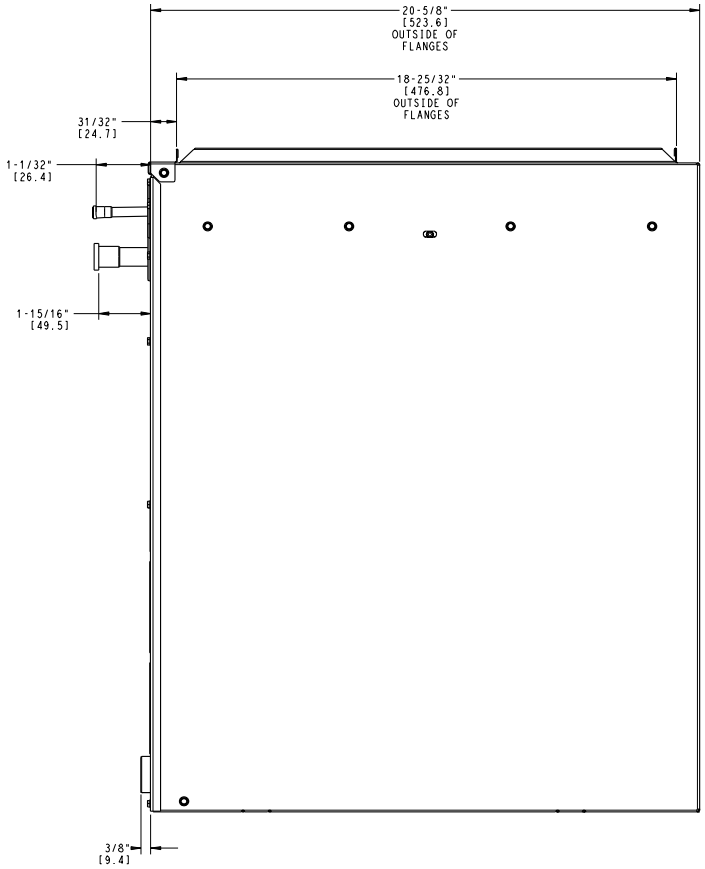

A210760

Fig. 10 – ESD4X

INDOOR PERFORMANCE DATA - COIL STATIC PRESSURE DROP (in. w.c.) BY SCFM – wet coil

Unit Size	450	500	550	600	650	700	750	800	850	900	950	1000	1050	1100	1150	1200	1250	1300	1350	1400	1450	1500	1550	1600	1650	1700	1750	1800	1850	1900	1950	2000	2050	2100	2150	2200	2250	2300	2350	2400	2450	2500
ESD4X24M14A				.15	.17	.19	.21	.24	.26	.29	.32	.36																															
EVD4X18M14A	.11	.13	.15	.18	.20	.23	.26																																				
EVD4X19M17A	.08	.07	.08	.09	.10	.11	.13																																				
EVD4X24M14A				.18	.20	.23	.26	.29	.32	.36	.39	.43																															
EVD4X24M17A				.15	.17	.19	.22	.25	.28	.31	.34	.37																															
EVD4X25M17A				.09	.10	.11	.13	.14	.16	.17	.19	.21																															
EVD4X30M14A							.19	.21	.23	.25	.27	.30	.32	.35	.37	.40	.43																										
EVD4X30M17A							.13	.14	.16	.17	.19	.21	.23	.25	.27	.29	.32																										
EVD4X31M17A							.08	.09	.10	.11	.12	.13	.14	.15	.16	.17	.19																										
EVD4X36M17A										.17	.19	.21	.23	.25	.27	.29	.32	.34	.36	.39	.42	.44																					
EVD4X36M21A										.16	.17	.19	.21	.22	.24	.26	.28	.30	.33	.35	.37	.40																					
EVD4X37M21A										.12	.13	.14	.16	.17	.18	.19	.21	.23	.24	.26	.28	.30																					
EVD4X38M17A										.08	.09	.10	.11	.12	.13	.14	.15	.16	.17	.18	.19	.20																					
EVD4X42M17A													.20	.22	.23	.25	.27	.29	.31	.34	.36	.38	.41	.43	.46	.49	.51																
EVD4X42M21A													.21	.22	.24	.26	.28	.30	.33	.35	.37	.40	.42	.45	.48	.51	.53																
EVD4X42M24A													.10	.11	.12	.13	.14	.15	.15	.16	.17	.19	.20	.21	.22	.23	.24																
EVD4X48M21A																.20	.21	.23	.24	.26	.28	.30	.32	.34	.36	.38	.40	.42	.45	.47	.50	.52											
EVD4X48M24A																.17	.18	.20	.21	.22	.24	.25	.26	.28	.30	.31	.33	.35	.36	.38	.40	.42											
EVD4X49M24A																.13	.14	.15	.15	.16	.17	.19	.20	.21	.22	.23	.24	.26	.27	.28	.30	.31											
EVD4X60M24A																						.19	.20	.21	.22	.23	.24	.26	.27	.28	.30	.31	.33	.34	.36	.37	.39	.41	.43	.44	.46	.48
EVD4X61M24A																						.11	.14	.15	.16	.17	.18	.19	.20	.21	.22	.23	.24	.25	.26	.28	.29	.30	.31	.33	.34	.36

Manufacturer reserves the right to change, at any time, specifications and designs without notice and without obligations.

Table 3 – Cooling Capacities (MBH) - R-410A Refrigerant

(See Legend and Notes at end of Table and on page 16.)

INDOOR COIL AIR		SATURATED TEMPERATURE LEAVING EVAPORATOR (deg F)														
		35			40			45			50			55		
CFM	EWB	TC	SHC	BF	TC	SHC	BF	TC	SHC	BF	TC	SHC	BF	TC	SHC	BF
ESD4X24M14A																
600	72	41.95	20.30	0.00	37.67	18.17	0.00	32.89	15.96	0.00	27.62	13.71	0.29	21.89	11.43	0.23
	67	34.12	20.86	0.00	29.77	18.70	0.22	25.14	16.46	0.20	20.09	14.14	0.20	14.49	11.65	0.22
	62	27.07	21.32	0.19	23.00	19.09	0.19	18.41	16.74	0.20	14.57	14.57	0.20	12.03	12.03	0.33
800	72	50.05	24.32	0.00	45.84	22.01	0.00	40.26	19.46	0.00	33.76	16.75	0.34	26.94	14.08	0.28
	67	41.52	25.38	0.39	36.35	22.88	0.27	30.79	20.24	0.25	24.69	17.47	0.25	17.80	14.47	0.26
	62	33.11	26.22	0.24	28.19	23.59	0.24	22.60	20.78	0.24	18.36	18.36	0.24	15.30	15.30	0.36
1000	72	57.94	27.87	0.00	52.74	25.19	0.00	46.39	22.38	0.00	39.21	19.38	0.39	31.16	16.32	0.32
	67	47.81	29.25	0.40	42.04	26.46	0.32	35.58	23.49	0.29	28.57	20.36	0.29	20.61	16.93	0.30
	62	38.14	30.38	0.28	32.52	27.44	0.28	26.10	24.28	0.28	21.69	21.69	0.28	18.12	18.12	0.39

INDOOR COIL AIR		SATURATED TEMPERATURE LEAVING EVAPORATOR (deg F)														
		35			40			45			50			55		
CFM	EWB	TC	SHC	BF	TC	SHC	BF	TC	SHC	BF	TC	SHC	BF	TC	SHC	BF
EVD4X18M14A																
450	72	31.31	15.37	0.00	27.96	13.65	0.00	24.20	11.91	0.00	20.10	10.14	0.23	15.71	8.30	0.22
	67	25.30	15.64	0.25	21.97	13.95	0.18	18.44	12.17	0.19	14.55	10.30	0.20	10.26	8.27	0.24
	62	19.87	15.75	0.18	16.93	14.10	0.18	13.43	12.22	0.20	10.36	10.34	0.21	8.58	8.58	0.34
600	72	37.61	18.53	0.00	34.45	16.76	0.00	29.96	14.68	0.00	25.00	12.57	0.29	19.67	10.38	0.26
	67	31.25	19.28	0.32	27.25	17.29	0.24	22.90	15.14	0.24	18.17	12.91	0.24	12.92	10.50	0.26
	62	24.78	19.68	0.22	21.07	17.64	0.23	16.71	15.34	0.24	13.17	13.17	0.24	10.70	10.70	0.38
750	72	43.85	21.47	0.00	40.09	19.42	0.00	35.03	17.09	0.00	29.19	14.66	0.33	23.09	12.18	0.30
	67	36.38	22.45	0.35	31.87	20.19	0.29	26.82	17.77	0.27	21.30	15.18	0.28	15.10	12.36	0.30
	62	28.97	23.09	0.26	24.58	20.69	0.26	19.58	18.12	0.27	15.79	15.79	0.27	12.96	12.96	0.40

INDOOR COIL AIR		SATURATED TEMPERATURE LEAVING EVAPORATOR (deg F)														
		35			40			45			50			55		
CFM	EWB	TC	SHC	BF	TC	SHC	BF	TC	SHC	BF	TC	SHC	BF	TC	SHC	BF
EVD4X19M17A																
450	72	32.85	15.91	0.00	29.52	14.20	0.00	25.84	12.48	0.00	21.71	10.67	0.22	17.05	8.82	0.15
	67	26.69	16.19	0.21	23.34	14.46	0.14	19.73	12.73	0.13	15.65	10.83	0.13	11.33	8.92	0.15
	62	21.08	16.37	0.11	17.98	14.66	0.12	14.42	12.84	0.12	11.04	11.04	0.14	9.08	9.07	0.28
600	72	40.05	19.64	0.00	36.82	17.65	0.00	32.34	15.57	0.00	27.29	13.39	0.27	21.56	11.15	0.19
	67	33.40	20.23	0.30	29.28	18.15	0.19	24.76	16.01	0.17	19.74	13.73	0.16	14.36	11.39	0.18
	62	26.55	20.67	0.15	22.59	18.53	0.15	18.12	16.26	0.16	14.33	14.33	0.16	11.82	11.82	0.30
750	72	47.04	22.76	0.00	43.22	20.63	0.00	38.03	18.27	0.00	32.16	15.78	0.30	25.51	13.20	0.22
	67	39.19	23.74	0.32	34.43	21.38	0.22	29.21	18.94	0.20	23.41	16.35	0.20	17.01	13.58	0.21
	62	31.24	24.44	0.19	26.78	22.04	0.19	21.44	19.39	0.19	17.34	17.34	0.18	14.33	14.33	0.32

Table 3 – Cooling Capacities (MBH) - R-410A Refrigerant (Continued)

INDOOR COIL AIR		SATURATED TEMPERATURE LEAVING EVAPORATOR (deg F)														
		35			40			45			50			55		
CFM	EWB	TC	SHC	BF	TC	SHC	BF	TC	SHC	BF	TC	SHC	BF	TC	SHC	BF
EVD4X24M14A																
600	72	38.06	18.85	0.00	34.74	17.01	0.00	30.37	14.96	0.00	25.46	12.83	0.31	19.95	10.60	0.26
	67	31.57	19.60	0.35	27.59	17.60	0.24	23.30	15.48	0.24	18.38	13.15	0.24	13.13	10.76	0.26
	62	25.08	20.08	0.22	21.25	17.92	0.22	16.96	15.69	0.23	13.39	13.39	0.24	11.00	11.00	0.37
800	72	46.08	22.66	0.00	42.15	20.53	0.00	36.86	18.08	0.00	31.01	15.61	0.36	24.45	12.99	0.31
	67	38.30	23.78	0.38	33.43	21.40	0.29	28.38	18.91	0.29	22.55	16.23	0.29	16.05	13.29	0.30
	62	30.58	24.57	0.27	26.09	22.10	0.27	20.62	19.29	0.28	16.79	16.79	0.28	13.96	13.96	0.40
1000	72	53.45	26.08	0.00	48.57	23.56	0.00	42.53	20.82	0.00	35.61	18.00	0.38	28.53	15.13	0.35
	67	44.07	27.42	0.39	38.67	24.74	0.34	32.81	21.93	0.33	26.00	18.85	0.32	18.67	15.61	0.33
	62	35.26	28.48	0.31	29.91	25.64	0.31	23.88	22.58	0.31	19.78	19.78	0.32	16.51	16.51	0.43

INDOOR COIL AIR		SATURATED TEMPERATURE LEAVING EVAPORATOR (deg F)														
		35			40			45			50			55		
CFM	EWB	TC	SHC	BF	TC	SHC	BF	TC	SHC	BF	TC	SHC	BF	TC	SHC	BF
EVD4X24M17A																
600	72	38.15	18.98	0.00	34.55	17.06	0.00	30.16	14.98	0.00	25.32	12.86	0.30	19.85	10.63	0.25
	67	31.36	19.64	0.33	27.39	17.61	0.23	23.16	15.50	0.22	18.30	13.18	0.23	13.14	10.84	0.24
	62	24.91	20.09	0.20	21.10	17.93	0.21	16.87	15.70	0.22	13.27	13.27	0.23	10.85	10.84	0.36
800	72	45.75	22.73	0.00	41.97	20.63	0.00	36.72	18.18	0.00	30.91	15.69	0.35	24.38	13.07	0.30
	67	38.12	23.87	0.37	33.36	21.47	0.29	28.28	18.98	0.28	22.48	16.30	0.27	16.03	13.35	0.29
	62	30.33	24.58	0.26	25.98	22.17	0.26	20.64	19.42	0.26	16.69	16.69	0.27	13.88	13.88	0.38
1000	72	53.13	26.16	0.00	48.37	23.66	0.00	42.38	20.94	0.00	35.70	18.12	0.39	28.52	15.24	0.34
	67	43.87	27.50	0.39	38.42	24.85	0.32	32.70	22.03	0.32	26.02	18.98	0.31	18.68	15.71	0.32
	62	35.13	28.59	0.30	29.82	25.75	0.30	23.91	22.73	0.30	19.71	19.71	0.30	16.44	16.44	0.41

INDOOR COIL AIR		SATURATED TEMPERATURE LEAVING EVAPORATOR (deg F)														
		35			40			45			50			55		
CFM	EWB	TC	SHC	BF	TC	SHC	BF	TC	SHC	BF	TC	SHC	BF	TC	SHC	BF
EVD4X25M17A																
600	72	45.24	22.02	0.00	40.81	19.79	0.00	35.80	17.43	0.00	30.31	15.06	0.27	23.95	12.54	0.19
	67	36.90	22.63	0.30	32.41	20.34	0.19	27.45	17.98	0.16	21.92	15.45	0.16	15.99	12.86	0.17
	62	29.37	23.18	0.15	25.13	20.86	0.15	20.13	18.31	0.15	15.96	15.96	0.15	13.12	13.12	0.30
800	72	54.18	26.47	0.00	49.85	24.04	0.00	43.92	21.33	0.00	37.29	18.53	0.31	29.62	15.54	0.23
	67	45.26	27.79	0.31	39.76	25.02	0.24	33.84	22.27	0.21	27.16	19.27	0.20	19.81	16.10	0.21
	62	36.09	28.67	0.20	30.98	25.91	0.20	24.85	22.88	0.20	20.05	20.05	0.20	16.80	16.80	0.32
1000	72	62.99	30.47	0.00	57.67	27.71	0.00	50.88	24.67	0.00	43.24	21.49	0.35	34.77	18.19	0.28
	67	52.20	32.12	0.33	45.98	29.05	0.28	39.27	25.96	0.25	31.57	22.56	0.24	23.01	18.90	0.25
	62	41.80	33.45	0.23	35.93	30.32	0.24	28.85	26.87	0.23	23.80	23.80	0.24	20.08	20.08	0.35

Table 3 – Cooling Capacities (MBH) - R-410A Refrigerant (Continued)

INDOOR COIL AIR		SATURATED TEMPERATURE LEAVING EVAPORATOR (deg F)														
		35			40			45			50			55		
CFM	EWB	TC	SHC	BF	TC	SHC	BF	TC	SHC	BF	TC	SHC	BF	TC	SHC	BF
EVD4X30M14A																
750	72	50.66	24.57	0.00	45.71	22.11	0.00	40.13	19.54	0.00	33.89	16.85	0.36	27.14	14.18	0.27
	67	41.37	25.45	0.00	36.25	22.85	0.27	30.79	20.26	0.24	24.59	17.47	0.23	17.89	14.59	0.23
	62	32.95	26.19	0.22	27.99	23.51	0.22	22.43	20.70	0.22	18.19	18.19	0.22	15.19	15.19	0.34
1000	72	60.27	29.21	0.00	54.96	26.44	0.00	48.40	23.49	0.00	40.96	20.35	0.40	32.86	17.19	0.32
	67	49.74	30.61	0.43	43.77	27.69	0.31	37.26	24.63	0.29	29.79	21.34	0.28	21.52	17.79	0.28
	62	39.71	31.81	0.27	33.83	28.72	0.27	27.16	25.40	0.27	22.59	22.59	0.27	18.99	18.99	0.38
1250	72	68.50	33.03	0.00	62.80	30.13	0.00	55.42	26.86	0.00	47.03	23.40	0.42	37.42	19.76	0.35
	67	56.83	35.07	0.41	50.16	31.86	0.35	42.76	28.43	0.33	34.19	24.72	0.32	24.53	20.55	0.32
	62	45.57	36.79	0.31	38.82	33.33	0.31	31.25	29.62	0.31	26.44	26.44	0.31	22.28	22.28	0.41

INDOOR COIL AIR		SATURATED TEMPERATURE LEAVING EVAPORATOR (deg F)														
		35			40			45			50			55		
CFM	EWB	TC	SHC	BF	TC	SHC	BF	TC	SHC	BF	TC	SHC	BF	TC	SHC	BF
EVD4X30M17A																
750	72	50.66	25.13	0.00	45.80	22.64	0.00	40.27	20.06	0.00	34.00	17.31	0.30	27.21	14.56	0.23
	67	41.50	26.09	0.29	36.42	23.47	0.22	30.94	20.81	0.20	24.76	17.94	0.20	18.06	14.97	0.20
	62	33.09	26.86	0.18	28.35	24.21	0.19	22.71	21.31	0.19	18.10	18.10	0.20	15.13	15.12	0.32
1000	72	60.09	29.83	0.00	55.27	27.24	0.00	48.78	24.25	0.00	41.33	21.08	0.33	33.17	17.79	0.28
	67	50.10	31.54	0.33	44.17	28.59	0.27	37.64	25.46	0.25	30.22	22.09	0.24	22.11	18.55	0.25
	62	40.08	32.80	0.24	34.48	29.74	0.24	27.70	26.36	0.23	22.70	22.70	0.24	19.12	19.12	0.35
1250	72	68.19	33.71	0.00	63.11	31.00	0.00	55.83	27.72	0.00	47.41	24.18	0.37	37.82	20.45	0.31
	67	57.19	36.13	0.35	50.57	32.88	0.31	43.25	29.44	0.29	34.77	25.66	0.28	25.36	21.57	0.29
	62	45.90	37.91	0.28	39.34	34.45	0.28	31.81	30.70	0.27	26.82	26.82	0.28	22.57	22.57	0.39

INDOOR COIL AIR		SATURATED TEMPERATURE LEAVING EVAPORATOR (deg F)														
		35			40			45			50			55		
CFM	EWB	TC	SHC	BF	TC	SHC	BF	TC	SHC	BF	TC	SHC	BF	TC	SHC	BF
EVD4X31M17A																
750	72	48.31	23.38	0.00	43.93	21.18	0.00	38.71	18.80	0.00	32.87	16.31	0.23	26.11	13.66	0.17
	67	39.74	24.37	0.21	35.07	22.00	0.17	29.78	19.51	0.15	23.91	16.85	0.15	17.53	14.08	0.16
	62	31.75	25.08	0.13	27.29	22.68	0.14	22.00	20.03	0.14	17.25	17.25	0.16	14.43	14.43	0.29
1000	72	57.79	27.96	0.00	53.28	25.60	0.00	47.20	22.90	0.00	40.23	19.99	0.27	32.08	16.87	0.21
	67	48.28	29.69	0.25	42.74	26.97	0.21	36.52	24.11	0.19	29.51	21.01	0.19	21.78	17.74	0.19
	62	38.74	30.93	0.18	33.49	28.17	0.18	27.04	25.00	0.18	22.03	22.03	0.19	18.57	18.57	0.31
1250	72	66.42	31.88	0.00	61.12	29.29	0.00	54.24	26.33	0.00	46.38	23.12	0.30	37.15	19.63	0.25
	67	55.30	34.17	0.28	49.10	31.20	0.25	42.17	28.06	0.23	34.14	24.57	0.22	25.28	20.88	0.22
	62	44.57	35.98	0.22	38.39	32.80	0.22	31.26	29.35	0.21	26.13	26.12	0.23	22.08	22.08	0.35

Table 3 – Cooling Capacities (MBH) - R-410A Refrigerant (Continued)

INDOOR COIL AIR		SATURATED TEMPERATURE LEAVING EVAPORATOR (deg F)														
		35			40			45			50			55		
CFM	EWB	TC	SHC	BF	TC	SHC	BF	TC	SHC	BF	TC	SHC	BF	TC	SHC	BF
EVD4X36M17A																
900	72	59.55	29.55	0.00	54.44	26.84	0.00	47.80	23.73	0.00	40.29	20.46	0.33	32.20	17.20	0.26
	67	49.33	30.93	0.37	43.24	27.81	0.26	36.66	24.63	0.24	29.32	21.26	0.23	21.36	17.74	0.23
	62	39.28	31.85	0.22	33.65	28.75	0.22	26.91	25.31	0.22	21.68	21.68	0.22	18.19	18.19	0.34
1200	72	71.40	35.22	0.00	65.42	32.08	0.00	57.59	28.52	0.00	48.64	24.69	0.38	38.60	20.76	0.31
	67	59.24	37.20	0.38	52.14	33.67	0.31	44.36	29.95	0.29	35.46	25.94	0.28	25.80	21.73	0.28
	62	47.29	38.66	0.27	40.38	34.97	0.27	32.51	31.01	0.27	26.94	26.94	0.27	22.67	22.67	0.38
1500	72	81.69	39.99	0.00	74.74	36.49	0.00	65.86	32.58	0.00	55.79	28.36	0.41	44.31	23.93	0.34
	67	67.67	42.61	0.40	59.64	38.67	0.35	50.88	34.56	0.33	40.67	30.02	0.32	29.67	25.32	0.32
	62	54.19	44.68	0.31	46.62	40.62	0.31	37.27	36.04	0.31	31.49	31.49	0.31	26.59	26.59	0.42
INDOOR COIL AIR		SATURATED TEMPERATURE LEAVING EVAPORATOR (deg F)														
		35			40			45			50			55		
CFM	EWB	TC	SHC	BF	TC	SHC	BF	TC	SHC	BF	TC	SHC	BF	TC	SHC	BF
EVD4X36M21A																
900	72	60.16	30.07	0.00	54.89	27.26	0.00	48.25	24.12	0.00	40.76	20.82	0.35	32.65	17.53	0.26
	67	49.73	31.40	0.00	43.59	28.20	0.26	37.00	25.03	0.23	29.61	21.63	0.22	21.60	18.10	0.23
	62	39.57	32.33	0.22	33.84	29.13	0.22	27.06	25.67	0.21	21.94	21.94	0.21	18.43	18.43	0.33
1200	72	72.09	35.82	0.00	65.96	32.57	0.00	58.14	28.99	0.00	49.23	25.14	0.39	39.46	21.23	0.32
	67	59.70	37.76	0.40	52.56	34.14	0.31	44.74	30.42	0.29	35.81	26.40	0.27	26.09	22.17	0.27
	62	47.62	39.22	0.27	40.89	35.55	0.27	32.73	31.50	0.26	27.24	27.24	0.26	22.96	22.96	0.37
1500	72	81.31	40.28	0.00	75.23	37.07	0.00	66.47	33.10	0.00	56.46	28.88	0.42	44.87	24.40	0.34
	67	68.09	43.19	0.40	60.11	39.22	0.35	51.32	35.11	0.33	41.07	30.56	0.31	30.00	25.83	0.31
	62	54.51	45.31	0.31	46.60	41.17	0.30	37.57	36.67	0.30	31.84	31.84	0.31	26.92	26.92	0.41
INDOOR COIL AIR		SATURATED TEMPERATURE LEAVING EVAPORATOR (deg F)														
		35			40			45			50			55		
CFM	EWB	TC	SHC	BF	TC	SHC	BF	TC	SHC	BF	TC	SHC	BF	TC	SHC	BF
EVD4X37M21A																
900	72	61.32	29.68	0.00	55.63	26.86	0.00	48.95	23.79	0.00	41.46	20.59	0.31	33.21	17.33	0.23
	67	50.38	30.93	0.32	44.21	27.79	0.23	37.61	24.72	0.20	30.15	21.37	0.19	22.06	17.91	0.20
	62	40.13	31.84	0.18	34.23	28.67	0.19	27.62	25.37	0.19	22.17	22.17	0.19	18.66	18.66	0.31
1200	72	72.92	35.23	0.00	67.06	32.22	0.00	59.21	28.72	0.00	50.24	24.97	0.35	40.39	21.15	0.28
	67	60.73	37.37	0.33	53.52	33.79	0.28	45.61	30.15	0.25	36.66	26.23	0.24	26.89	22.11	0.24
	62	48.52	38.84	0.24	41.75	35.28	0.24	33.56	31.30	0.23	27.71	27.71	0.24	23.41	23.41	0.35
1500	72	82.48	39.65	0.00	76.45	36.61	0.00	67.69	32.81	0.00	57.60	28.67	0.38	45.93	24.28	0.31
	67	69.19	42.72	0.36	61.20	38.84	0.32	52.35	34.84	0.30	42.09	30.41	0.28	30.87	25.74	0.28
	62	55.45	44.82	0.28	47.56	40.83	0.27	38.51	36.44	0.27	32.47	32.47	0.28	27.58	27.58	0.38

Table 3 – Cooling Capacities (MBH) - R-410A Refrigerant (Continued)

INDOOR COIL AIR		SATURATED TEMPERATURE LEAVING EVAPORATOR (deg F)														
		35			40			45			50			55		
CFM	EWB	TC	SHC	BF	TC	SHC	BF	TC	SHC	BF	TC	SHC	BF	TC	SHC	BF
EVD4X38M17A																
900	72	66.07	31.91	0.00	60.51	29.14	0.00	53.50	25.93	0.00	45.53	22.52	0.26	36.40	18.96	0.18
	67	54.68	33.46	0.24	48.32	30.25	0.18	41.21	26.95	0.16	33.18	23.39	0.14	24.47	19.70	0.15
	62	43.69	34.53	0.14	37.44	31.22	0.14	30.29	27.69	0.14	24.16	24.16	0.15	20.25	20.25	0.28
1200	72	79.72	38.31	0.00	73.31	35.16	0.00	65.05	31.50	0.00	55.57	27.54	0.30	44.55	23.33	0.22
	67	66.30	40.72	0.27	58.77	37.01	0.23	50.27	33.13	0.20	40.62	28.98	0.19	30.05	24.56	0.19
	62	53.16	42.51	0.18	45.65	38.61	0.18	37.12	34.48	0.18	30.81	30.81	0.18	25.92	25.92	0.31
1500	72	91.34	43.62	0.00	83.79	40.08	0.00	74.58	36.13	0.00	63.95	31.79	0.32	51.42	27.10	0.26
	67	75.79	46.79	0.29	67.42	42.76	0.26	57.89	38.51	0.24	46.90	33.84	0.22	34.76	28.85	0.22
	62	60.90	49.27	0.22	52.78	45.15	0.22	42.76	40.40	0.21	36.45	36.45	0.22	30.76	30.76	0.34
INDOOR COIL AIR		SATURATED TEMPERATURE LEAVING EVAPORATOR (deg F)														
		35			40			45			50			55		
CFM	EWB	TC	SHC	BF	TC	SHC	BF	TC	SHC	BF	TC	SHC	BF	TC	SHC	BF
EVD4X42M17A																
1050	72	65.43	31.44	0.00	59.39	28.48	0.00	52.11	25.23	0.00	43.99	21.82	0.33	34.78	18.27	0.26
	67	53.67	32.89	0.32	47.22	29.72	0.26	40.13	26.40	0.25	32.15	22.83	0.24	23.48	19.13	0.24
	62	42.89	34.07	0.23	36.64	30.75	0.23	29.52	27.22	0.23	24.03	24.03	0.24	20.16	20.16	0.35
1400	72	76.92	36.84	0.00	70.69	33.74	0.00	62.23	30.07	0.00	52.71	26.19	0.37	41.80	22.05	0.32
	67	63.99	39.33	0.36	56.40	35.67	0.32	48.14	31.89	0.30	38.65	27.74	0.29	28.13	23.27	0.30
	62	51.30	41.18	0.28	43.92	37.36	0.28	35.46	33.24	0.28	29.62	29.62	0.29	25.00	25.00	0.40
1750	72	87.33	41.55	0.00	80.24	38.22	0.00	70.83	34.23	0.00	60.13	29.96	0.40	47.64	25.28	0.35
	67	72.62	44.86	0.38	63.96	40.92	0.34	54.90	36.66	0.34	43.99	31.96	0.33	32.19	27.03	0.33
	62	58.47	47.43	0.32	50.06	43.20	0.32	40.44	38.54	0.32	34.43	34.43	0.33	29.17	29.17	0.43
INDOOR COIL AIR		SATURATED TEMPERATURE LEAVING EVAPORATOR (deg F)														
		35			40			45			50			55		
CFM	EWB	TC	SHC	BF	TC	SHC	BF	TC	SHC	BF	TC	SHC	BF	TC	SHC	BF
EVD4X42M21A																
1050	72	67.79	33.30	0.00	61.46	30.13	0.00	53.97	26.70	0.00	45.68	23.14	0.36	36.22	19.42	0.28
	67	55.62	34.83	0.39	48.84	31.40	0.29	41.53	27.93	0.26	33.24	24.17	0.25	24.28	20.29	0.25
	62	44.37	36.06	0.24	37.80	32.52	0.24	30.43	28.80	0.24	24.94	24.94	0.24	20.94	20.94	0.36
1400	72	79.88	39.09	0.00	73.16	35.70	0.00	64.43	31.80	0.00	54.67	27.73	0.40	43.49	23.40	0.33
	67	66.20	41.59	0.39	58.32	37.68	0.34	49.72	33.65	0.32	39.90	29.31	0.30	29.02	24.63	0.30
	62	52.97	43.49	0.30	45.23	39.41	0.30	36.47	35.07	0.29	30.68	30.68	0.30	25.90	25.90	0.40
1750	72	89.44	43.70	0.00	82.93	40.37	0.00	73.30	36.18	0.00	62.24	31.63	0.43	49.48	26.79	0.37
	67	75.08	47.39	0.41	66.36	43.15	0.37	56.74	38.71	0.35	45.40	33.78	0.34	33.13	28.56	0.34
	62	60.13	49.92	0.34	51.46	45.48	0.33	41.63	40.66	0.33	35.61	35.61	0.34	30.13	30.13	0.44

Manufacturer reserves the right to change, at any time, specifications and designs without notice and without obligations.

Table 3 – Cooling Capacities (MBH) - R-410A Refrigerant (Continued)

INDOOR COIL AIR		SATURATED TEMPERATURE LEAVING EVAPORATOR (deg F)														
		35			40			45			50			55		
CFM	EWB	TC	SHC	BF	TC	SHC	BF	TC	SHC	BF	TC	SHC	BF	TC	SHC	BF
EVD4X42M24A																
1050	72	74.72	35.51	0.00	68.10	32.34	0.00	60.27	28.85	0.00	51.53	25.22	0.30	41.29	21.27	0.22
	67	61.57	37.31	0.28	54.52	33.85	0.22	46.55	30.20	0.19	37.57	26.35	0.18	27.74	22.31	0.17
	62	49.21	38.69	0.17	42.40	35.17	0.17	34.19	31.23	0.17	27.99	27.99	0.17	23.60	23.60	0.30
1400	72	88.62	41.93	0.00	81.41	38.52	0.00	72.32	34.59	0.00	61.98	30.40	0.34	49.86	25.88	0.26
	67	73.58	44.80	0.31	65.34	40.84	0.27	56.04	36.73	0.24	45.38	32.27	0.22	33.59	27.49	0.22
	62	59.09	47.08	0.22	50.82	42.97	0.22	41.35	38.50	0.21	35.15	35.15	0.22	29.58	29.58	0.34
1750	72	100.52	47.28	0.00	92.09	43.51	0.00	82.10	39.32	0.00	70.58	34.75	0.36	56.93	29.76	0.30
	67	83.23	51.00	0.33	74.16	46.75	0.30	63.79	42.23	0.28	51.81	37.34	0.26	38.38	31.96	0.26
	62	66.94	54.08	0.26	57.78	49.65	0.26	47.22	44.81	0.25	41.18	41.18	0.26	34.80	34.80	0.37

INDOOR COIL AIR		SATURATED TEMPERATURE LEAVING EVAPORATOR (deg F)														
		35			40			45			50			55		
CFM	EWB	TC	SHC	BF	TC	SHC	BF	TC	SHC	BF	TC	SHC	BF	TC	SHC	BF
EVD4X48M21A																
1200	72	73.87	35.91	0.00	67.26	32.69	0.00	59.32	29.10	0.00	50.53	25.40	0.35	40.27	21.41	0.28
	67	60.80	37.84	0.35	53.64	34.26	0.28	45.78	30.63	0.25	36.83	26.68	0.24	27.06	22.53	0.24
	62	48.63	39.41	0.24	41.58	35.70	0.23	33.61	31.77	0.23	27.83	27.83	0.23	23.56	23.56	0.35
1600	72	85.80	41.62	0.00	79.40	38.44	0.00	70.40	34.51	0.00	60.05	30.24	0.39	48.05	25.71	0.32
	67	71.91	44.97	0.37	63.61	40.91	0.33	54.43	36.75	0.31	43.93	32.24	0.29	32.18	27.29	0.29
	62	57.60	47.29	0.29	49.42	43.11	0.28	40.07	38.60	0.28	34.55	34.55	0.28	29.07	29.07	0.39
2000	72	96.29	46.56	0.00	89.52	43.29	0.00	79.58	39.08	0.00	68.10	34.44	0.42	55.12	29.51	0.37
	67	80.98	51.00	0.39	71.92	46.66	0.37	61.79	42.16	0.35	49.89	37.15	0.33	36.81	31.75	0.33
	62	65.18	54.29	0.33	55.93	49.66	0.32	45.77	44.98	0.31	40.04	40.04	0.33	33.77	33.77	0.43

INDOOR COIL AIR		SATURATED TEMPERATURE LEAVING EVAPORATOR (deg F)														
		35			40			45			50			55		
CFM	EWB	TC	SHC	BF	TC	SHC	BF	TC	SHC	BF	TC	SHC	BF	TC	SHC	BF
EVD4X48M24A																
1200	72	79.81	39.46	0.00	72.63	35.89	0.00	64.23	32.05	0.00	54.82	28.00	0.36	44.23	23.72	0.28
	67	65.66	41.55	0.35	58.07	37.69	0.28	49.57	33.68	0.25	39.89	29.37	0.23	29.37	24.88	0.23
	62	52.48	43.24	0.23	45.18	39.31	0.23	36.39	34.98	0.22	30.13	30.13	0.22	25.54	25.54	0.34
1600	72	92.80	45.79	0.00	85.82	42.25	0.00	76.13	37.94	0.00	65.13	33.33	0.39	52.26	28.37	0.32
	67	77.65	49.37	0.37	68.80	44.96	0.33	58.91	40.41	0.30	47.64	35.54	0.28	35.17	30.33	0.28
	62	62.25	52.00	0.28	53.44	47.46	0.27	43.37	42.51	0.27	37.47	37.47	0.27	31.56	31.56	0.38
2000	72	104.22	51.22	0.00	96.76	47.59	0.00	86.10	42.99	0.00	73.87	37.96	0.42	59.44	32.52	0.35
	67	87.44	56.01	0.39	77.79	51.29	0.36	66.83	46.35	0.34	54.08	40.97	0.32	39.80	35.01	0.32
	62	70.20	59.49	0.32	60.49	54.66	0.31	49.10	49.17	0.31	43.45	43.45	0.32	36.70	36.70	0.42

Table 3 – Cooling Capacities (MBH) - R-410A Refrigerant (Continued)

INDOOR COIL AIR		SATURATED TEMPERATURE LEAVING EVAPORATOR (deg F)														
		35			40			45			50			55		
CFM	EWB	TC	SHC	BF	TC	SHC	BF	TC	SHC	BF	TC	SHC	BF	TC	SHC	BF
EVD4X49M24A																
1500	72	90.26	43.73	0.00	82.55	40.07	0.00	73.49	36.11	0.00	63.13	31.82	0.35	50.91	27.11	0.28
	67	74.67	46.77	0.32	66.41	42.72	0.28	57.05	38.44	0.26	46.10	33.79	0.24	34.38	29.04	0.23
	62	59.91	49.19	0.24	51.58	45.00	0.23	42.01	40.40	0.22	36.06	36.06	0.23	30.41	30.41	0.34
2000	72	104.83	50.53	0.00	96.12	46.62	0.00	85.82	42.26	0.00	73.96	37.49	0.38	59.91	32.27	0.33
	67	86.77	54.89	0.35	77.52	50.46	0.33	66.78	45.69	0.31	54.39	40.64	0.29	40.25	34.86	0.28
	62	69.94	58.58	0.29	60.46	54.03	0.28	49.45	48.80	0.28	43.97	43.97	0.29	37.22	37.22	0.39
2500	72	114.87	55.49	0.00	106.87	51.96	0.00	95.76	47.41	0.00	82.86	42.35	0.41	67.33	36.71	0.36
	67	96.83	61.97	0.38	86.52	57.14	0.36	74.87	52.09	0.35	61.10	46.60	0.33	45.24	40.22	0.32
	62	78.12	66.89	0.33	67.54	61.88	0.32	56.77	56.77	0.27	51.01	51.00	0.34	43.04	43.04	0.44
INDOOR COIL AIR		SATURATED TEMPERATURE LEAVING EVAPORATOR (deg F)														
		35			40			45			50			55		
CFM	EWB	TC	SHC	BF	TC	SHC	BF	TC	SHC	BF	TC	SHC	BF	TC	SHC	BF
EVD4X60M24A																
1500	72	95.05	47.18	0.00	86.49	43.00	0.00	76.55	38.48	0.00	65.38	33.70	0.35	51.86	28.42	0.27
	67	78.43	50.08	0.34	69.21	45.39	0.29	59.16	40.67	0.26	47.65	35.57	0.24	35.04	30.13	0.24
	62	62.48	52.17	0.24	53.93	47.59	0.24	43.48	42.45	0.23	36.52	36.52	0.23	30.90	30.90	0.35
2000	72	110.73	54.63	0.00	101.58	50.38	0.00	90.20	45.36	0.00	77.27	39.99	0.39	62.03	34.13	0.32
	67	91.79	59.02	0.37	81.54	53.95	0.33	69.87	48.63	0.31	56.53	42.89	0.29	41.61	36.55	0.29
	62	73.61	62.44	0.29	63.34	57.26	0.28	51.39	51.36	0.28	45.11	45.11	0.29	38.01	38.01	0.39
2500	72	122.60	60.37	0.00	113.83	56.48	0.00	101.48	51.19	0.00	87.16	45.35	0.41	69.91	38.89	0.36
	67	102.94	66.78	0.39	91.68	61.38	0.37	78.81	55.62	0.35	63.73	49.18	0.33	47.11	42.25	0.33
	62	82.83	71.48	0.33	71.33	65.79	0.32	59.65	61.14	0.30	51.69	51.69	0.34	43.99	43.99	0.44
INDOOR COIL AIR		SATURATED TEMPERATURE LEAVING EVAPORATOR (deg F)														
		35			40			45			50			55		
CFM	EWB	TC	SHC	BF	TC	SHC	BF	TC	SHC	BF	TC	SHC	BF	TC	SHC	BF
EVD4X61M24A																
1500	72	94.46	45.65	0.00	86.26	41.81	0.00	76.80	37.61	0.00	65.93	33.10	0.30	53.14	28.19	0.23
	67	77.91	48.53	0.27	69.38	44.37	0.23	59.55	39.89	0.21	48.22	35.07	0.19	35.85	29.95	0.18
	62	62.60	51.02	0.19	53.97	46.63	0.18	43.99	41.83	0.18	37.12	37.12	0.19	31.34	31.34	0.31
2000	72	110.16	52.98	0.00	101.33	49.08	0.00	90.57	44.50	0.00	78.09	39.47	0.33	63.23	33.91	0.27
	67	91.60	57.64	0.30	81.85	53.03	0.27	70.60	48.04	0.25	57.38	42.57	0.24	42.80	36.62	0.23
	62	73.76	61.30	0.24	63.81	56.46	0.23	52.76	51.59	0.22	45.76	45.76	0.25	38.83	38.83	0.36
2500	72	122.87	59.05	0.00	113.06	54.89	0.00	101.33	50.02	0.00	87.66	44.67	0.35	71.21	38.64	0.31
	67	102.27	65.08	0.33	91.57	60.13	0.31	79.23	54.80	0.29	64.58	48.89	0.27	48.31	42.31	0.27
	62	82.54	69.99	0.28	71.56	64.86	0.27	60.86	60.73	0.25	53.27	53.27	0.29	45.29	45.29	0.40

CFM - Cubic Ft. per Minute **EWB** - Entering Wet Bulb (°F) **LWB** - Leaving Wet Bulb (°F) **TC** - Gross Cooling Capacity 1000 Btuh

SHC - Gross Sensible Capacity 1000 Btuh **BF** - Bypass Factor **MBH** - 1000 Btuh

COOLING CAPACITIES NOTES:

1. Contact manufacturer for cooling capacities at conditions other than shown in table.
2. Formulas:
   Leaving db = entering db - $\frac{\text{sensible heat cap.}}{1.09 \times \text{CFM}}$
   Leaving wb = wb corresponding to enthalpy of air leaving coil (h_{LWB})

   $h_{LWB} = h_{EWB} - \frac{\text{total capacity (Btuh)}}{4.5 \times \text{CFM}}$
   Where h_{EWB} = enthalpy of air entering coil
3. SHC is based on 80°F db temperature of air entering the evaporator coil.
   Below 80°F db, subtract (Correction Factor x CFM) from SHC.
   Above 80°F db, add (Correction Factor x CFM) to SHC.
4. Direct interpolation is permissible. Do not extrapolate.
5. Fan motor heat has not been deducted.
6. All data points are based on approximately 10°F superheat measured at the suction service valve and use of thermostatic expansion valve (TXV) device.
7. All units have sweat suction-tube connection and a liquid-tube connection. For 1-1/8-in. system suction tube, 3/4 x 1-1/8-in. suction tube connection adapter is available as accessory.
8. Before using maximum cfm shown in table, check coil static pressure drop to ensure system blower can provide necessary static pressure needed for coil and duct systems.
9. Bypass Factor = 0 indicates no psychometric solution. Use bypass factor of next lower EWB for approximation.

BYPASS FACTOR	ENTERING AIR DRY BULB TEMPERATURE (°F)					
	79	78	77	76	75	Under 75
	81	82	83	84	84	Above 85
	Correction Factor					
0.10 0.20 0.30	0.98 0.87 0.76	1.96 1.74 1.53	2.94 2.62 2.29	3.92 3.49 3.05	4.91 4.36 3.82	Use formula shown below

Interpolation is permissible.
Correction Factor = 1.09 x (1 - BF) x (db - 80)

© 2022 Carrier. All rights reserved.

Manufacturer reserves the right to change, at any time, specifications and designs without notice and without obligations.