574D

SINGLE-PACKAGED GAS FURNACE/AIR CONDITIONER SYSTEM WITH PURON® (R-410A) REFRIGERANT 1-1/2-5 NOMINAL TONS (SIZES 018-060) 1 & 3 PHASE

bryant®

Installation Instructions

NOTE: Read the entire instruction manual before starting the installation.

NOTE: Installer: Make sure the Owner's Manual and Service Instructions are left with the unit after installation.

TABLE OF CONTENTS

Page

SAFETY CONSIDERATIONS 1
INTRODUCTION 2
RECEIVING AND INSTALLATION 2-12
Check Equipment 2
Identify Unit 2
Inspect Shipment 2
Provide Unit Support 2
Roof Curb 2
Slab Mount 2
Ground Mount 2
Field Fabricate Ductwork 2
Provide Clearances 6
Rig and Place Unit 6
Inspection 6
Use of Rigging Bracket 6
Connect Condensate Drain 8
Install Flue Hood 8
Install Gas Piping 9
Install Duct Connections 9-10
Configuring Units for Downflow (Vertical) Discharge 9-10
Install Electrical Connections 11
High-Voltage Connections 11
Special Procedures for 208-V Operation 11
Control Voltage Connections 11
Heat Anticipator Setting 12
Transformer Protection 12
PRE-START-UP 12-13
START-UP 13-19
Check for Refrigerant Leaks 13
Start-Up Heating & Make Adjustments 13
Check Heating Control 13
Check Gas Input 13
Adjust Gas Input 14
Check Burner Flame 14
Airflow and Temperature Rise 14
Heating Sequence of Operation 18
Limit Switches 18
Rollout Switch 18
Start-Up Cooling & Make Adjustments 18
Checking Cooling Control Operation 18
Checking & Adjusting Refrigerant Charge 18
Indoor Airflow and Airflow Adjustments 19
Cooling Sequence of Operation 19
MAINTENANCE 23-26
Air Filter 23
Indoor Blower and Motor 23
Flue Gas Passageways 24
Induced Draft (Combustion Air) Blower 24
Limit Switch 24
Burner Ignition 24
Main Burners 24
Outdoor Coil, Indoor Coil, & Condensate Drain Pan . . . 24
Outdoor Fan 25
Electrical Controls and Wiring 25
Refrigerant Circuit 26
Gas Input 26
Evaporator Airflow 26
Puron Items 26
TROUBLESHOOTING 27
START-UP CHECKLIST 27

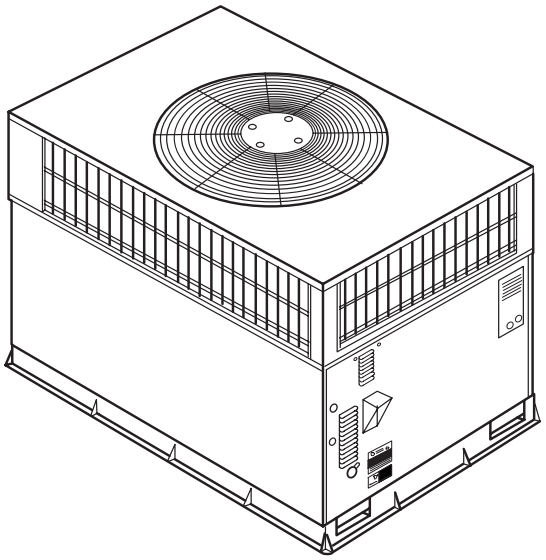

A99338

Fig. 1 - Unit 574D
(Low NOx Model Available)

SAFETY CONSIDERATIONS

Installation and servicing of this equipment can be hazardous due to mechanical and electrical components. Only trained and qualified personnel should install, repair, or service this equipment.

Untrained personnel can perform basic maintenance functions such as cleaning and replacing air filters. All other operations must be performed by trained service personnel. When working on this equipment, observe precautions in the literature, on tags, and on labels attached to or shipped with the unit and other safety precautions that may apply.

Follow all safety codes. Installation must be in compliance with local and national building codes. Wear safety glasses, protective clothing, and work gloves. Have fire extinguisher available. Read these instructions thoroughly and follow all warnings or cautions included in literature and attached to the unit.

Recognize safety information. This is the safety-alert symbol ⚠. When you see this symbol on the unit and in instructions or manuals, be alert to the potential for personal injury. Understand these signal words: DANGER, WARNING, and CAUTION. These words are used with the safety-alert symbol. DANGER identifies the most serious hazards which **will** result in severe personal injury or death. WARNING signifies hazards which **could** result in personal injury or death. CAUTION is used to identify unsafe practices which **may** result in minor personal injury or product and property damage. NOTE is used to highlight suggestions which **will** result in enhanced installation, reliability, or operation.

⚠ WARNING

ELECTRICAL SHOCK HAZARD

Failure to follow this warning could result in personal injury or death.

Before installing or servicing system, always turn off main power to system. There may be more than one disconnect switch. Turn off accessory heater power switch if applicable.

⚠ WARNING

FIRE, EXPLOSION, ELECTRICAL SHOCK AND CARBON MONOXIDE POISONING HAZARD

Failure to follow this warning could result in personal injury or unit damage.

A qualified installer or agency must use only factory-authorized kits or accessories when modifying this product.

574D

INTRODUCTION

The 574D unit (see Fig. 1) is a fully self-contained, combination Category I gas heating/electric cooling unit designed for outdoor installation (See Fig. 3 and 4 for unit dimensions). All unit sizes have return and discharge openings for both horizontal and downflow configurations, and are factory shipped with all downflow duct openings covered. Units may be installed either on a rooftop, a cement slab, or directly on the ground, if local codes permit (See Fig. 5 for roof curb dimensions).

Models with an N in the fifth position of the model number are dedicated Low NOx units designed for California installations. These models meet the California maximum oxides of nitrogen (NOx) emissions requirements of 40 nanograms/joule or less as shipped from the factory and must be installed in California Air Quality Management Districts or any other regions in North America where a Low NOx rule exists.

NOTE: Low NOx requirements apply only to natural gas installations.

RECEIVING AND INSTALLATION

Step 1—Check Equipment

IDENTIFY UNIT

The unit model number and serial number are stamped on the unit information plate. Check this information against shipping papers.

INSPECT SHIPMENT

Inspect for shipping damage while unit is still on shipping pallet. If unit appears to be damaged or is torn loose from its anchorage, have it examined by transportation inspectors before removal. Forward claim papers directly to transportation company. Manufacturer is not responsible for any damage incurred in transit. Check all items against shipping list. Immediately notify the nearest equipment distribution office if any item is missing. To prevent loss or damage, leave all parts in original packages until installation.

Step 2—Provide Unit Support

For hurricane tie downs, contact distributor for details and PE (Professional Engineering) Certificate if required.

ROOF CURB

Install accessory roof curb in accordance with instructions shipped with curb (See Fig. 5). Install insulation, cant strips, roofing, and flashing. Ductwork must be attached to curb.

IMPORTANT: The gasketing of the unit to the roof curb is critical for a water tight seal. Install gasketing material supplied with the roof curb. Improperly applied gasketing also can result in air leaks and poor unit performance.

Curb should be level to within 1/4 in. This is necessary for unit drain to function properly. Refer to accessory roof curb installation instructions for additional information as required.

SLAB MOUNT

Place the unit on a solid, level concrete pad that is a minimum of 4 in. (101.6 mm) thick with 2 in. (50.8 mm) above grade (See Fig. 2). The slab should extend approximately 2 in. beyond the casing on all 4 sides of the unit. Do not secure the unit to the slab *except* when required by local codes.

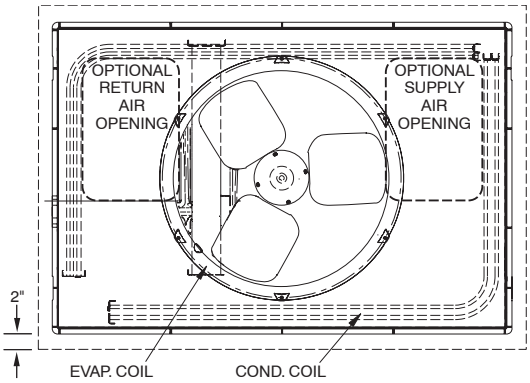

Fig. 2 - Slab Mounting Details

GROUND MOUNT

The unit may be installed either on a slab or placed directly on the ground, if local codes permit. Place the unit on level ground prepared with gravel for condensate discharge.

Step 3—Field Fabricate Ductwork

Secure all ducts to roof curb and building structure on vertical discharge units. Do not connect ductwork to unit. For horizontal applications, unit is provided with flanges on the horizontal openings. All ductwork should be secured to the flanges. Insulate and weatherproof all external ductwork, joints, and roof openings with counter flashing and mastic in accordance with applicable codes.

Ducts passing through an unconditioned space must be insulated and covered with a vapor barrier.

If a plenum return is used on a vertical unit, the return should be ducted through the roof deck to comply with applicable fire codes.

A minimum clearance is not required around ductwork. Cabinet return-air static shall not exceed -.25 in. wc.

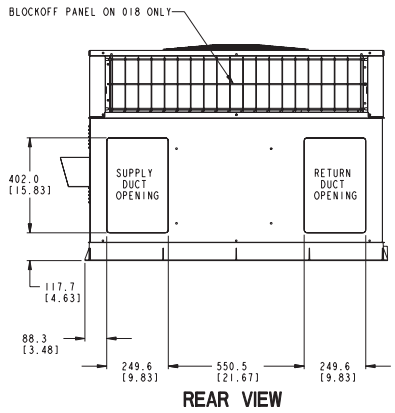

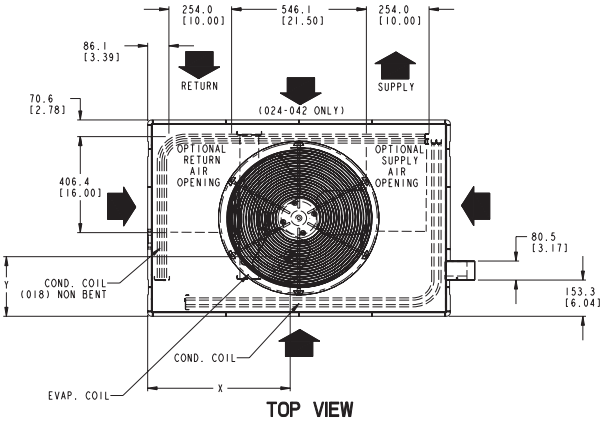

REQUIRED CLEARANCE TO COMBUSTIBLE MAT'L.
(Refer to Maximum Operating Clearances)

	INCHES [mm]
TOP OF UNIT	14.00 [355.6]
DUCT SIDE OF UNIT	2.00 [50.8]
SIDE OPPOSITE DUCTS	14.00 [355.6]
BOTTOM OF UNIT	0.50 [12.7]

NEC. REQUIRED CLEARANCES.

	INCHES [mm]
BETWEEN UNITS, POWER ENTRY SIDE	42.00 [1066.8]
UNIT AND UNGROUNDED SURFACES, POWER ENTRY SIDE	36.00 [914.0]
UNIT AND BLOCK OR CONCRETE WALLS AND OTHER GROUNDED SURFACES, POWER ENTRY SIDE	42.00 [1066.8]

LEGEND
CG - Center of Gravity
COND - Condensor
EVAP - Evaporator
NEC - National Electrical Code
REQ'D - Required

NOTE: Dimensions are in in. [mm]

REQUIRED CLEARANCE FOR OPERATION AND SERVICING

	INCHES [mm]
EVAP. COIL ACCESS SIDE	36.00 [914.0]
POWER ENTRY SIDE	42.00 [1066.8]
(EXCEPT FOR NEC REQUIREMENTS)	
UNIT TOP	48.00 [1219.2]
SIDE OPPOSITE DUCTS	36.00 [914.0]
DUCT PANEL	12.00 [304.8] *

*MINIMUM DISTANCES: IF UNIT IS PLACED LESS THAN 12.00 [304.8] FROM WALL SYSTEM, THEN SYSTEM PERFORMANCE MAYBE COMPROMISE.

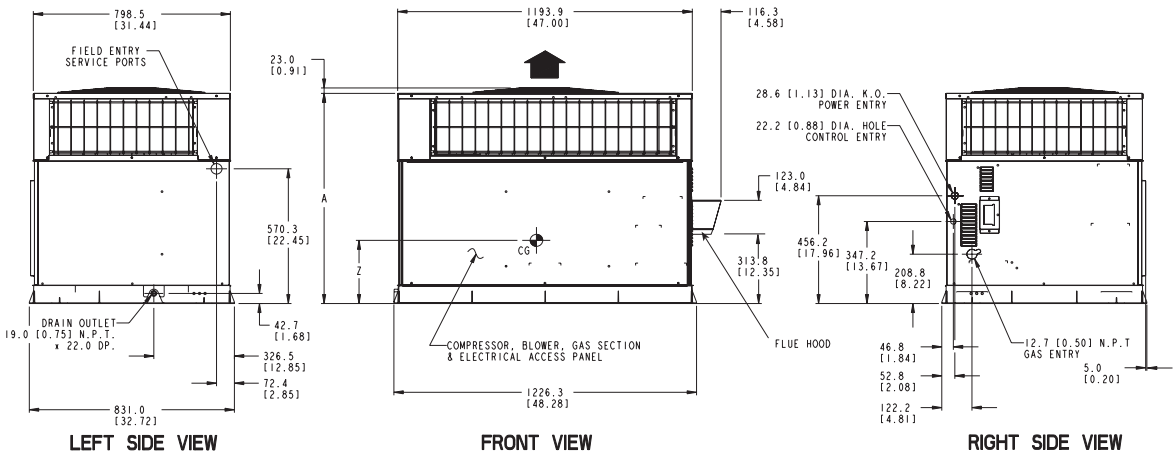

A05166

UNIT	ELECTRICAL CHARACTERISTICS	UNIT WEIGHT		UNIT HEIGHT IN. [MM] "A"	CENTER OF GRAVITY IN. [MM]		
		lb	kg		X	Y	Z
574D018	208/230-1-60	282	127.9	37.02 [940]	23.3 [591.8]	15.5 [393.7]	15.5 [393.7]
574D024	208/230-1-60	296	134.2	37.02 [940]	23.6 [599.4]	15.8 [401.3]	15.7 [398.8]
574D030	208/230-1-60, 208/230-3-60	313	142.0	39.02 [991]	23.3 [591.8]	15.7 [398.8]	15.8 [401.3]
574D036	208/230-1-60, 208/230-3-60, 460-3-60	338	153.3	41.02 [1042]	23.0 [584.2]	15.8 [401.3]	16.6 [421.6]

Fig. 3 - 574D018-036 Unit Dimensions

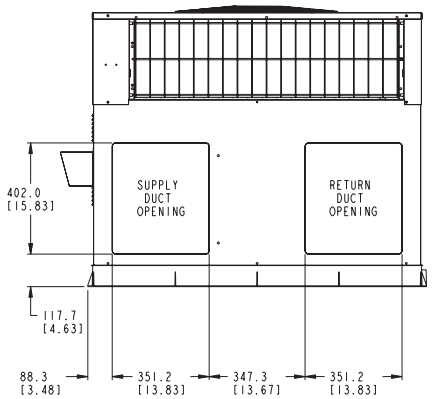

REAR VIEW

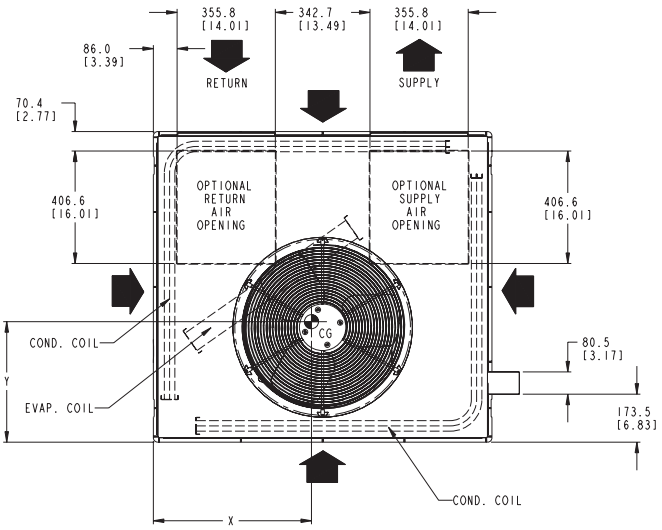

TOP VIEW

REQUIRED CLEARANCE TO COMBUSTIBLE MATL.

	INCHES [mm]
TOP OF UNIT	14.00 [355.6]
DUCT SIDE OF UNIT	2.00 [50.8]
SIDE OPPOSITE DUCTS	14.00 [355.6]
BOTTOM OF UNIT	0.50 [12.7]
ELECTRIC HEAT PANEL	36.00 [914.4]

NEC. REQUIRED CLEARANCES.

	INCHES [mm]
BETWEEN UNITS, POWER ENTRY SIDE	42.00 [1066.8]
UNIT AND UNGROUNDED SURFACES, POWER ENTRY SIDE	36.00 [914.0]
UNIT AND BLOCK OR CONCRETE WALLS AND OTHER GROUNDED SURFACES, POWER ENTRY SIDE	42.00 [1066.8]

REQUIRED CLEARANCE FOR OPERATION AND SERVICING

	INCHES [mm]
EVAP. COIL ACCESS SIDE	36.00 [914.0]
POWER ENTRY SIDE	42.00 [1066.8]
(EXCEPT FOR NEC REQUIREMENTS)	
UNIT TOP	48.00 [1219.2]
SIDE OPPOSITE DUCTS	36.00 [914.0]
DUCT PANEL	12.00 [304.8] *

*MINIMUM DISTANCES: IF UNIT IS PLACED LESS THAN 12.00 [304.8] FROM WALL SYSTEM, THEN SYSTEM PERFORMANCE MAYBE COMPROMISE.

LEGEND
CG - Center of Gravity
COND - Condensor
EVAP - Evaporator
NEC - National Electrical Code
REQ'D - Required

NOTE: Dimensions are in in. [mm]

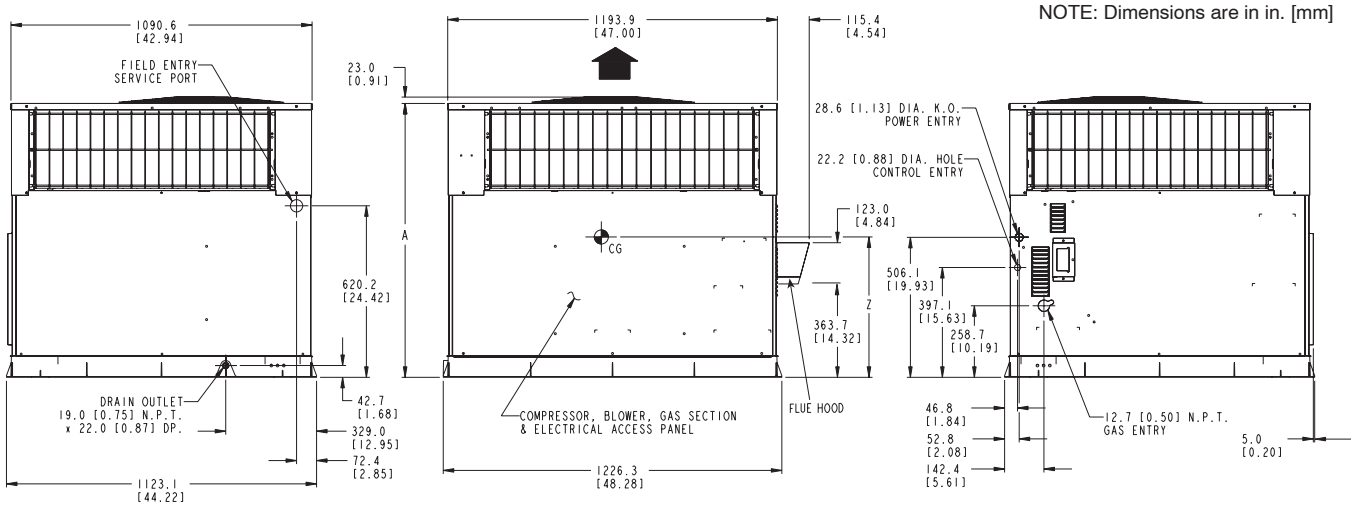

LEFT SIDE VIEW FRONT VIEW RIGHT SIDE VIEW

A05142

UNIT	ELECTRICAL CHARACTERISTICS	UNIT WEIGHT		UNIT HEIGHT IN. [MM] "A"	CENTER OF GRAVITY IN. [MM]		
		lb	kg		X	Y	Z
574D042	208/230-1-60, 208/230-3-60, 460-3-60	401	181.9	42.98 [1092]	25.5 [647.7]	20.5 [520.7]	17.1 [434.3]
574D048	208/230-1-60, 208/230-3-60, 460-3-60	418	189.6	42.98 [1092]	25.2 [640.1]	20.7 [525.8]	17.4 [442.0]
574D060	208/230-1-60, 208/230-3-60, 460-3-60	446	202.3	46.98 [1193]	25.5 [647.7]	21.0 [533.4]	17.6 [447.0]

Fig. 4 - 574D042-060 Unit Dimensions

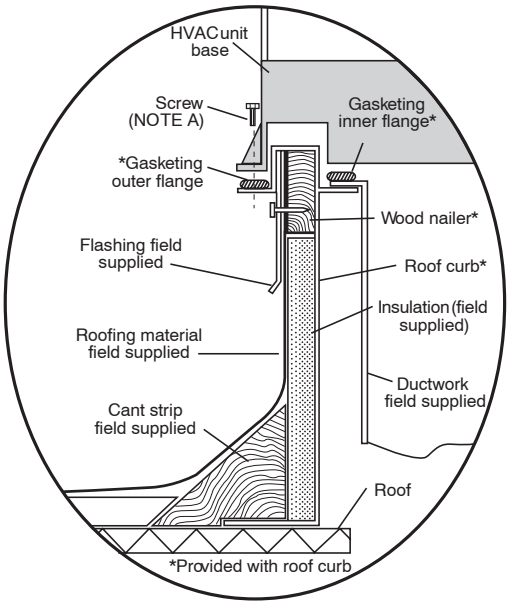

Roof Curb for Small Cabinet

Note A: When unit mounting screw is used, retainer bracket must also be used.

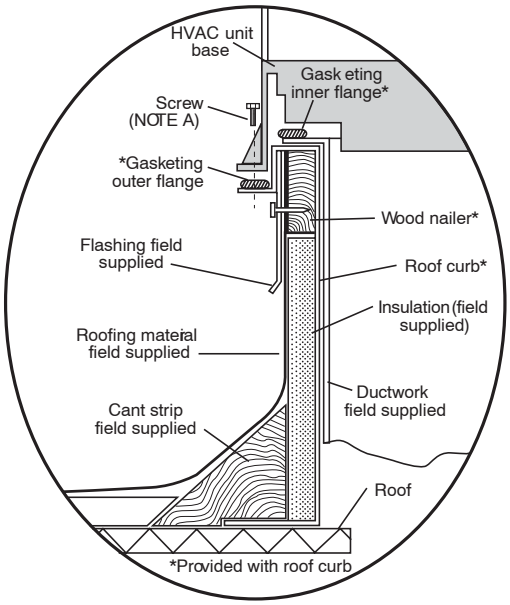

Roof Curb for Large Cabinet

Note A: When unit mounting screw is used, retainer bracket must also be used.

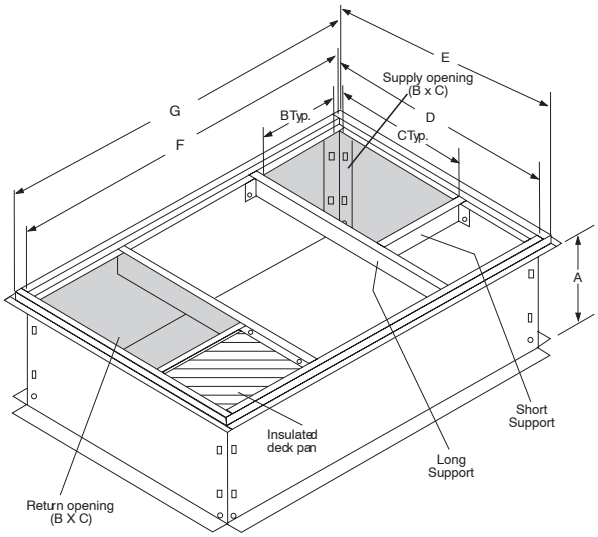

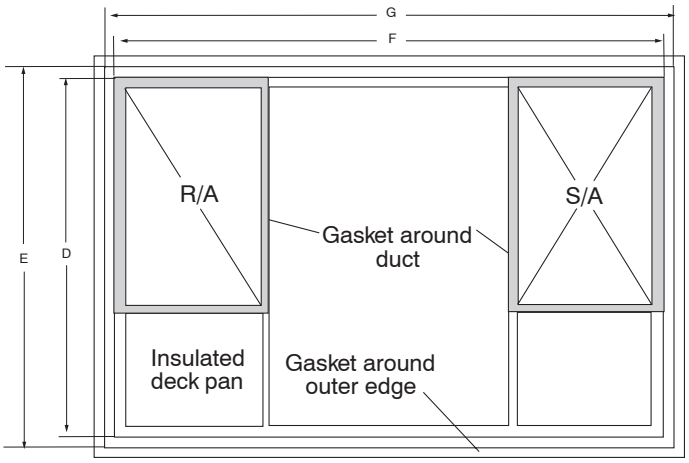

A05308

UNIT SIZE	ODS CATALOG NUMBER	A IN. (MM)	B IN. (MM)	C IN. (MM)	D IN. (MM)	E IN. (MM)	F IN. (MM)	G IN. (MM)
574D018-036	CPRFCURB006A00	8 (203)	11 (279)	16-1/2 (419)	28-3/4 (730)	30-3/8 (771)	44-5/16 (1126)	45-15/16 (1167)
	CPRFCURB007A00	14 (356)	11 (279)	16-1/2 (419)	28-3/4 (730)	30-3/8 (771)	44-5/16 (1126)	45-15/16 (1167)
574D042-060	CPRFCURB008A00	8 (203)	16-3/16 (411)	17-3/8 (441)	40-1/4 (1022)	41-15/16 (1065)	44-7/16 (1129)	46-1/16 (1169)
	CPRFCURB009A00	14 (356)	16-3/16 (411)	17-3/8 (441)	40-1/4 (1022)	41-15/16 (1065)	44-7/16 (1129)	46-1/16 (1169)

NOTES:

1. Roof curb must be set up for unit being installed.
2. Seal strip must be applied, as required, to unit being installed.
3. Roof curb is made of 16-gauge steel.
4. Attach ductwork to curb (flanges of duct rest on curb).
5. Insulated panels: 1-in. thick fiberglass 1 lb. density.
6. When unit mounting screw is used (see Note A), a retainer bracket must be used as well. This bracket must also be used when required by code for hurricane or seismic conditions. This bracket is available through Micrometl.

Fig. 5 - Roof Curb Dimensions

Step 4—Provide Clearances

The required minimum operating and service clearances are shown in Fig. 3 and 4. Adequate combustion, ventilation and condenser air must be provided in accordance with section 5.3, Air for Combustion and Ventilation, of the National Fuel Gas Code ANSI (American National Standards Institute) Z223.1 or applicable provisions of local building code. In Canada, follow sections 7.2, 7.3, or 7.4 or Can/CGA (Canadian Gas Association) B149 Installation Codes or applicable provisions of local building code.

IMPORTANT: Do not restrict outdoor airflow. An air restriction at either the outdoor-air inlet or the fan discharge may be detrimental to compressor life.

The condenser fan pulls air through the condenser coil and discharges it through the top grille. Be sure that the fan discharge does not recirculate to the condenser coil. Do not locate the unit in either a corner or under an overhead obstruction. The minimum clearance under a partial overhang (such as a normal house overhang) is 48-in. (1219.19 mm) above the unit top. The maximum horizontal extension of a partial overhang must not exceed 48-in. (1219.19 mm).

Do not place the unit where water, ice, or snow from an overhang or roof will damage or flood the unit. Do not install the unit on carpeting or other combustible materials. Slab-mounted units should be at least 4 in. above the highest expected water and runoff levels. Do not use unit if it has been under water.

Step 5—Rig and Place Unit

Rigging and handling of this equipment can be hazardous for many reasons due to the installation location (roofs, elevated structures, etc.).

Only trained, qualified crane operators and ground support staff should handle and install this equipment.

When working with this equipment, observe precautions in the literature, on tags, stickers, and labels attached to the equipment, and any other safety precautions that might apply.

Training for operators of the lifting equipment should include, but not be limited to, the following:

1. Application of the lifter to the load, and adjustment of the lifts to adapt to various sizes or kinds of loads.
2. Instruction in any special operation or precaution.
3. Condition of the load as it relates to operation of the lifting kit, such as balance, temperature, etc.

Follow all applicable safety codes. Wear safety shoes and work gloves.

INSPECTION

The lifting/rigging bracket is engineered and designed to be installed *only* on Small Packaged Products. This bracket is to be used to rig/lift a Small Packaged Product onto roofs or other elevated structures.

Prior to initial use, and at monthly intervals, all rigging brackets and straps should be visually inspected for any damage, evidence of wear, structural deformation, or cracks. Particular attention should be paid to excessive wear at hoist hooking points and load support areas. Brackets or straps showing any kind of wear in these areas must not be used and should be discarded.

⚠ WARNING

UNIT FALLING HAZARD

Failure to follow this warning could result in personal injury or death.

Never stand beneath rigged units or lift over people.

⚠ WARNING

PROPERTY DAMAGE HAZARD

Failure to follow this warning could result in personal injury/death or property damage.

Rigging brackets for one unit use only. When removing a unit at the end of its useful life, use a new set of brackets.

USE OF RIGGING BRACKET

Field Installation of Rigging Bracket (if not already installed)

1. Remove unit from shipping carton. Leave top shipping skid on the unit for use as a spreader bar to prevent the rigging straps from damaging the unit. If the skid is not available, use a spreader bar of sufficient length to protect the unit from damage.
2. Remove 4 screws in unit corner posts.
3. Attach each of the 4 metal rigging brackets under the panel rain lip (See Fig. 6). Use the screws removed in step 2 above to secure the brackets to the unit.

⚠ WARNING

PROPERTY DAMAGE HAZARD

Failure to follow this warning could result in personal injury/death or property damage.

Rigging bracket MUST be under the rain lip to provide adequate lifting.

⚠ WARNING

PROPERTY DAMAGE HAZARD

Failure to follow this warning could result in personal injury/death or property damage.

Do not strip screws when re-securing the unit. If a screw is stripped, replace the stripped one with a larger diameter screw (included). When straps are taut, the clevis should be a minimum of 36 in. (914.4 mm) above the unit top cover.

Rigging/Lifting of Unit

1. Bend top of brackets down approximately 30 degrees from the corner posts.
2. Attach straps of equal length to the rigging brackets at opposite ends of the unit. Be sure straps are rated to hold the weight of the unit (See Fig. 6).
3. Attach a clevis of sufficient strength in the middle of the straps. Adjust the clevis location to ensure unit is lifted level with the ground.
4. Remove corner post screws and rigging brackets, then re-install screws.

After the unit is placed on the roof curb or mounting pad, remove the top crating.

Table 1—Physical Data - Unit 574D

UNIT SIZE	018040	024040	024060	030040	030060	036060	036090	042060	042090
NOMINAL CAPACITY (ton)	1–1/2	2	2	2–1/2	2–1/2	3	3	3–1/2	3–1/2
OPERATING WEIGHT (lb)	282	296	296	313	313	338	338	401	401
OPERATING WEIGHT(kg)	127.9	134.2	134.2	142.0	142.0	153.3	153.3	181.9	181.9
COMPRESSORS	Scroll								
Quantity	1								
REFRIGERANT (R–22)									
Quantity (lb.)	5.0	6.9	6.9	8.0	8.0	9.2	9.2	8.8	8.8
Quantity (kg)	2.3	3.1	3.1	3.6	3.6	4.2	4.2	4.0	4.0
REFRIGERANT METERING DEVICE	TXV								
CONDENSER COIL									
Rows...Fins/in.	1...21	2...21	2...21	2...21	2...21	2...21	2...21	2...21	2...21
Face Area (sq ft)	10.2	10.2	10.2	11.9	11.9	13.6	13.6	19.4	19.4
CONDENSER FAN									
Nominal Cfm	2200	2200	2200	2800	2800	3000	3000	3500	3500
Diameter (in.)	22	22	22	22	22	22	22	22	22
Diameter (mm)	558.8	558.8	558.8	558.8	558.8	558.8	558.8	558.8	558.8
Motor Hp (Rpm)	1/8 (825)	1/8 (825)	1/8 (825)	1/8 (825)	1/8 (825)	1/8 (825)	1/8 (825)	1/8 (825)	1/8 (825)
EVAPORATOR COIL									
Rows...Fins/in.	3...17	3...17	3...17	3...17	3...17	4...17	4...17	3...17	3...17
Face Area (sq ft)	3.7	3.7	3.7	3.7	3.7	3.7	3.7	4.7	4.7
INDOOR BLOWER									
Nominal Airflow (Cfm)	650	800	800	1000	1000	1200	1200	1400	1400
Size (in.)	10x10	10x10	10x10	10x10	10x10	10x10	10x10	11x10	11x10
Size (mm)	254x254	254x254	254x254	254x254	254x254	254x254	254x254	279.4x254	279.4x254
Motor HP (RPM)	1/4 (825)	1/3 (1050)	1/3 (1050)	1/3 (1050)	1/3 (1050)	1/2 (1000)	1/2 (1000)	1/2 (1075)	1/2 (1075)
FURNACE SECTION*									
Burner Orifice No. (Qty...Drill Size)									
Natural Gas	2...44	2...44	2...38	2...44	2...38	2...38	3...38	2...38	2...38
Propane Gas	2...50	2...50	2...46	2...50	2...46	2...46	3...46	2...46	2...46
HIGH-PRESSURE SWITCH (psig) Cut-out Reset (Auto)	650 +/- 15 420 +/- 25								
LOSS-OF-CHARGE / LOW-PRESSURE SWITCH (Liquid Line) (psig) cut-out Reset (auto)	20 +/- 5 45 +/- 10								
RETURN–AIR FILTERS (in.)†‡	20x24x1					24x30x1		24x36x1	
Throwaway	508x610x25 (mm)					610x762x25 (mm)		610x914x25 (mm)	

Table 1—Physical Data Con't - Unit 574D

UNIT SIZE	048090	048115	048130	060090	060115	060130
NOMINAL CAPACITY (ton)	4	4	4	5	5	5
OPERATING WEIGHT (lb)	418	418	418	446	446	446
OPERATING WEIGHT (kg)	189.6	189.6	189.6	202.3	202.3	202.3
COMPRESSORS	Scroll					
Quantity	1					
REFRIGERANT (R-410A)						
Quantity (lb.)	9.0	9.0	9.0	10.5	10.5	10.5
Quantity (kg)	4.1	4.1	4.1	4.8	4.8	4.8
REFRIGERANT METERING DEVICE	TXV					
CONDENSER COIL						
Rows...Fins/in.	2...21	2...21	2...21	2...21	2...21	2...21
Face Area (sq ft)	19.4	19.4	19.4	19.4	19.4	19.4
CONDENSER FAN						
Nominal Cfm	3500	3500	3500	4200	4200	4200
Diameter (in.)	22	22	22	22	22	22
Diameter (mm)	558.8	558.8	558.8	558.8	558.8	558.8
Motor Hp (Rpm)	1/4 (1100)	1/4 (1100)	1/4 (1100)	1/4 (1100)	1/4 (1100)	1/4 (1100)
EVAPORATOR COIL						
Rows...Fins/in.	3...17	3...17	3...17	4...17	4...17	4...17
Face Area (sq ft)	5.7	5.7	5.7	5.7	5.7	5.7
INDOOR BLOWER						
Max	1600	1600	1600	2000	2000	2000
Size (In.)	11x10	11x10	11x10	11x10	11x10	11x10
Size (mm)	279.4x254	279.4x254	279.4x254	279.4x254	279.4x254	279.4x254
Motor HP (RPM)	1/2 (1075)	1/2 (1075)	1/2 (1075)	1.0 (1040)	1.0 (1040)	1.0 (1040)
FURNACE SECTION*						
Burner Orifice No. (Qty...Drill Size)						
Natural Gas	3...38	3...33	3...31	3...38	3...33	3...31
Propane Gas	3...46	3...42	3...41	3...46	3...42	3...41
HIGH-PRESSURE SWITCH (psig) Cut-out Reset (Auto)	650 +/- 15 420 +/- 25					
LOSS-OF-CHARGE / LOW-PRESSURE SWITCH (Liquid Line) (psig) cut-out Reset (auto)	20 +/- 5 45 +/- 10					
RETURN-AIR FILTERS (in.)†‡	24x36x1					
Throwaway	610x914x25 (mm)					

*Based on altitude of 0 to 2000 ft.

† Required filter sizes shown are based on the larger of the ARI (Air Conditioning and Refrigeration Institute) rated cooling airflow or the heating airflow velocity of 300 ft/minute for throwaway type or 450 ft/minute for high-capacity type. Air filter pressure drop for non-standard filters must not exceed 0.08 in. wc.

‡ If using accessory filter rack refer to the filter rack installation instructions for correct filter sizes and quantity.

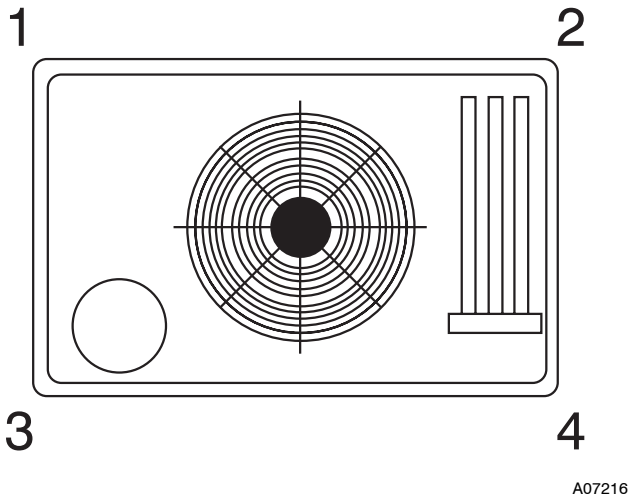

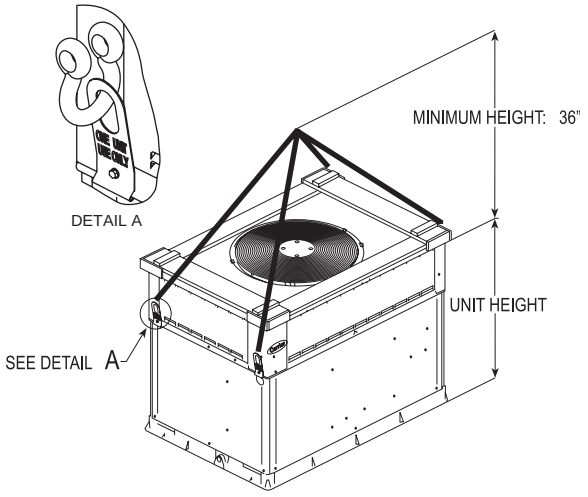

CORNER WEIGHTS (SMALL CABINET)									CORNER WEIGHTS (LARGE CABINET)						
Unit	018		024		030		036		Unit	042		048		060	
	lb	kg	lb	kg	lb	kg	lb	kg	Total Weight	lb	kg	lb	kg	lb	kg
Total Weight	282	127.9	296	134.2	313	142.0	338	153.3	Total Weight	401	181.9	418	189.6	446	202.3
Corner Weight 1	73	33.1	59	26.8	55	25.1	72	32.5	Corner Weight 1	68	30.6	62	28.1	54	24.5
Corner Weight 2	60	27.4	84	38.0	95	42.9	89	40.3	Corner Weight 2	119	53.8	135	61.2	158	71.7
Corner Weight 3	95	43.0	81	36.8	78	35.2	95	43.0	Corner Weight 3	60	27.2	64	29.2	81	36.6
Corner Weight 4	54	24.4	72	32.6	85	38.7	83	37.5	Corner Weight 4	155	70.3	157	71.1	154	69.7
Rigging Weight	301	136.5	315	142.9	332	150.6	357	161.9	Rigging Weight	423	191.8	440	199.5	468	212.2
Shipping Weight	336	152.4	350	158.7	367	166.4	392	177.8	Shipping Weight	463	210.0	480	217.7	508	230.4

Fig. 6 - 574D Unit Corner Weights (in Pounds) and Suggested Rigging

Step 6—Connect Condensate Drain

NOTE: When installing condensate drain connection be sure to comply with local codes and restrictions.

Model 574D disposes of condensate water through a 3/4 in. NPT fitting which exits through the base on the evaporator coil access side. See Fig. 3 & 4 for location.

Condensate water can be drained directly onto the roof in rooftop installations (where permitted) or onto a gravel apron in ground level installations. Install a field-supplied 2-in. (50.8 mm) condensate trap at the end of condensate connection to ensure proper drainage. Make sure that the outlet of the trap is at least 1 in. (25.4 mm) lower than the drain-pan condensate connection to prevent the pan from overflowing (See Fig. 7). Prime the trap with water. When using a gravel apron, make sure it slopes away from the unit.

Connect a drain tube using a minimum of 3/4-in. PVC or 3/4-in. copper pipe (all field-supplied) at the outlet end of the 2-in. (50.8 mm) trap. Do not undersize the tube. Pitch the drain tube downward at a slope of at least 1-in. for every 10 ft of horizontal run. Be sure to check the drain tube for leaks.

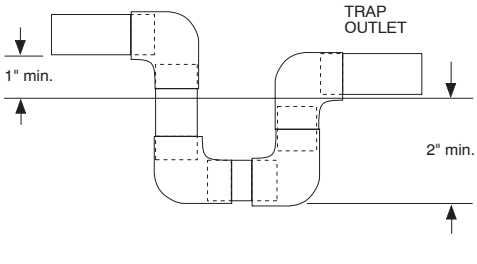

Fig. 7 - Condensate Trap

Step 7—Install Flue Hood

The flue assembly is secured and shipped in the return air duct. Remove duct cover to locate the assembly (See Fig. 9 and 10).

NOTE: Dedicated low NOx models MUST be installed in California Air Quality Management Districts where a Low NOx rule exists.

These models meet the California maximum oxides of nitrogen (NOx) emissions requirements of 40 nanograms/joule or less as shipped from the factory.

NOTE: Low NOx requirements apply only to natural gas installations.

⚠ WARNING

CARBON MONOXIDE POISONING HAZARD

Failure to follow this warning could result in personal injury or death.

The venting system is designed to ensure proper venting. The flue hood assembly must be installed as indicted in this section of the unit installation instructions.

Install the flue hood as follows:

1. This installation must conform with local building codes and with the National Fuel Gas Code (NFGC), ANSI Z223.1 (in Canada, CAN/CGA B149.1, and B149.2) or NFPA (National Fire Protection Association) latest revision. Refer to Provincial and local plumbing or wastewater codes and other applicable local codes.
2. Remove flue hood from shipping location (inside the return section of the blower compartment-see Fig. 9 & 10). Remove the return duct cover to locate the flue hood. Place flue

hood assembly over flue panel. Orient screw holes in flue hood with holes in the flue panel.

3. Secure flue hood to flue panel by inserting a single screw on the right side and the left side of the hood.

Step 8—Install Gas Piping

The gas supply pipe enters the unit through the access hole provided. The gas connection to the unit is made to the 1/2-in. FPT gas inlet on the gas valve.

Install a gas supply line that runs to the heating section. Refer to Table 2 and the NFGC for gas pipe sizing. Do not use cast-iron pipe. It is recommended that a black iron pipe is used. Check the local utility for recommendations concerning existing lines. Size gas supply piping for 0.5 in. wc maximum pressure drop. Never use pipe smaller than the 1/2-in. FPT gas inlet on the unit gas valve.

For natural gas applications, the gas pressure at unit gas connection must not be less than 4.0 in. wc or greater than 13 in. wc while the unit is operating. For propane applications, the gas pressure must not be less than 7.0 in. wc or greater than 13 in. wc at the unit connection.

A 1/8-in. NPT plugged tapping, accessible for test gauge connection, must be installed immediately upstream of the gas supply connection to the gas valve.

When installing the gas supply line, observe local codes pertaining to gas pipe installations. Refer to the NFGC ANSI Z223.1-2005 NFPA latest edition (in Canada, CAN/CGA B149.1).

NOTE:In the state of Massachusetts:

1. Gas supply connections MUST be performed by a licensed plumber or gas fitter.
2. When flexible connectors are used, the maximum length shall not exceed 36 inches (915 mm).
3. When lever handle type manual equipment shutoff valves are used, they shall be T-handle valves.
4. The use of copper tubing for gas piping is NOT approved by the state of Massachusetts.

In the absence of local building codes, adhere to the following pertinent recommendations:

1. Avoid low spots in long runs of pipe. Grade all pipe 1/4 in. for every 15 ft of length to prevent traps. Grade all horizontal runs downward to risers. Use risers to connect to heating section and to meter.
2. Protect all segments of piping system against physical and thermal damage. Support all piping with appropriate straps, hangers, etc. Use a minimum of one hanger every 6 ft (1.8 m). For pipe sizes larger than 1/2 in., follow recommendations of national codes.
3. Apply joint compound (pipe dope) sparingly and only to male threads of joint when making pipe connections. Use only pipe dope that is resistant to action of liquefied petroleum gases as specified by local and/or national codes. Never use Teflon tape.
4. Install sediment trap in riser leading to heating section (See Fig. 8). This drip leg functions as a trap for dirt and condensate.
5. Install an accessible, external, manual main shutoff valve in gas supply pipe within 6 ft (1.8 m) of heating section.
6. Install ground-joint union close to heating section between unit manual shutoff and external manual main shut-off valve.
7. Pressure test all gas piping in accordance with local and national plumbing and gas codes before connecting piping to unit.

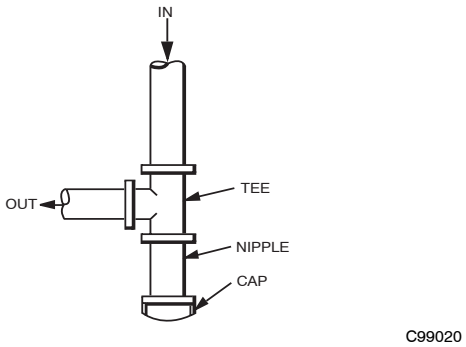

Fig. 8 - Sediment Trap

NOTE: Pressure test the gas supply system after the gas supply piping is connected to the gas valve. The supply piping must be disconnected from the gas valve during the testing of the piping systems when test pressure is in excess of 0.5 psig. Pressure test the gas supply piping system at pressures equal to or less than 0.5 psig. The unit heating section must be isolated from the gas piping system by closing the external main manual shutoff valve and slightly opening the ground-joint union.

574D

⚠ WARNING

FIRE OR EXPLOSION HAZARD

Failure to follow this warning could result in personal injury, death and/or property damage.

-Connect gas pipe to unit using a backup wrench to avoid damaging gas controls.

-Never purge a gas line into a combustion chamber. Never test for gas leaks with an open flame. Use a commercially available soap solution made specifically for the detection of leaks to check all connections.

-Use proper length of pipe to avoid stress on gas control manifold.

-If a flexible connector is required or allowed by authority having jurisdiction, black iron pipe shall be installed at furnace gas valve and extend a minimum of 2 in. outside furnace casing.

-If codes allow a flexible connector, always use a new connector. do not use a connector which has previously serviced another gas appliance.

8. Check for gas leaks at the field-installed and factory-installed gas lines after all piping connections have been completed. Use soap-and-water solution (or method specified by local codes and/or regulations).

Step 9—Install Duct Connections

The unit has duct flanges on the supply- and return-air openings on the side and bottom of the unit. For downshot applications, the ductwork connects to the roof curb (See Fig. 3 and 4 for connection sizes and locations).

CONFIGURING UNITS FOR DOWNFLOW (VERTICAL) DISCHARGE

⚠ WARNING

ELECTRICAL SHOCK HAZARD

Failure to follow this warning could result in personal injury or death.

Before installing or servicing system, always turn off main power to system. There may be more than one disconnect switch.

1. Open all electrical disconnects before starting any service work.
2. Remove horizontal (metal) duct covers to access vertical (downflow) discharge duct knockouts in unit base.
3. Use a screwdriver and hammer to remove the panels in the bottom of the unit base (See Fig. 10).
4. If unit ductwork is to be attached to vertical opening flanges on the unit base (jackstand applications only), do so at this time.

⚠ CAUTION

PROPERTY DAMAGE HAZARD

Failure to follow this caution may result in property damage.

Collect ALL screws that were removed. **Do not** leave screws on rooftop as permanent damage to the roof may occur.

5. It is recommended that the base insulation around the perimeter of the vertical return-air opening be secured to the base with aluminum tape. Applicable local codes may require aluminum tape to prevent exposed fiberglass.
6. Cover both horizontal duct openings with the provided duct covers. Ensure opening is air- and watertight.
7. After completing unit conversion, perform all safety checks and power up unit.

NOTE: The design and installation of the duct system must be in accordance with the standards of the NFPA for installation of nonresidence-type air conditioning and ventilating systems, NFPA 90A or residence-type, NFPA 90B; and/or local codes and ordinances.

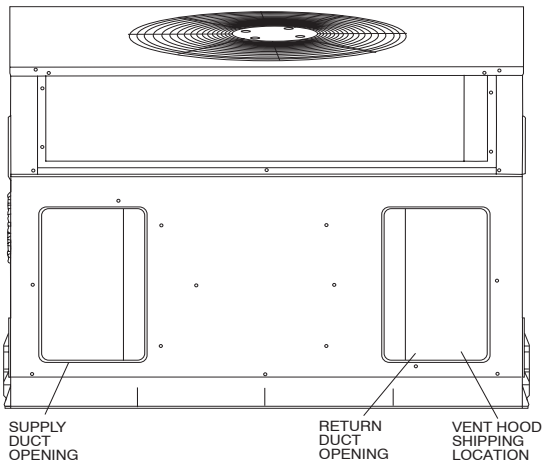

Fig. 9 - Supply and Return Duct Opening

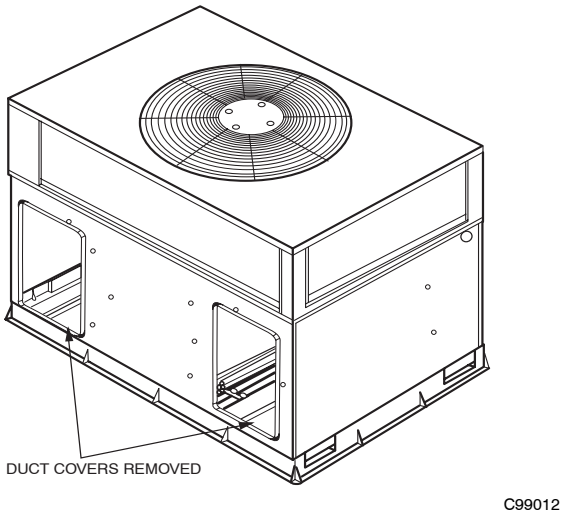

Fig. 10 - Vertical Duct Cover Removed

Adhere to the following criteria when selecting, sizing, and installing the duct system:

1. Units are shipped for horizontal duct installation (by removing duct covers).
2. Select and size ductwork, supply-air registers, and return-air grilles according to American Society of Heating, Refrigeration and Air Conditioning Engineers (ASHRAE) recommendations.
3. Use flexible transition between rigid ductwork and unit to prevent transmission of vibration. The transition may be screwed or bolted to duct flanges. Use suitable gaskets to ensure weather-tight and airtight seal.
4. All units must have field-supplied filters or accessory filter rack installed in the return-air side of the unit. Recommended sizes for filters are shown in Table 1.
5. Size all ductwork for maximum required airflow (either heating or cooling) for unit being installed. Avoid abrupt duct size increases or decreases or performance may be affected.
6. Adequately insulate and weatherproof all ductwork located outdoors. Insulate ducts passing through unconditioned space, and use vapor barrier in accordance with latest issue of Sheet Metal and Air Conditioning Contractors National Association (SMACNA) and Air Conditioning Contractors of America (ACCA) minimum installation standards for heating and air conditioning systems. Secure all ducts to building structure.
7. Flash, weatherproof, and vibration isolate all openings in building structure in accordance with local codes and good building practices.

Table 2—Maximum Gas Flow Capacity*

NOMINAL IRON PIPE SIZE (IN.)	INTERNAL DIAMETER (IN.)	LENGTH OF PIPE (FT)†													
		10	20	30	40	50	60	70	80	90	100	125	150	175	200
1/2	.622	175	120	97	82	73	66	61	57	53	50	44	40	—	—
3/4	.824	360	250	200	170	151	138	125	118	110	103	93	84	77	72
1	1.049	680	465	375	320	285	260	240	220	205	195	175	160	145	135
1-1/4	1.380	1400	950	770	600	580	530	490	460	430	400	360	325	300	280
1-1/2	1.610	2100	1460	1180	990	900	810	750	690	650	620	550	500	460	430

*Capacity of pipe in cu ft of gas per hr for gas pressure of 0.5 psig or less. Pressure drop of 0.5-in. wc (based on a 0.60 specific gravity gas). Refer to Table, National Fire Protection Association NFPA 54.

† This length includes an ordinary number of fittings.

Step 10—Install Electrical Connections

⚠ WARNING

ELECTRICAL SHOCK HAZARD

Failure to follow this warning could result in personal injury or death.

The unit cabinet must have an uninterrupted, unbroken electrical ground. This ground may consist of an electrical wire connected to the unit ground screw in the control compartment, or conduit approved for electrical ground when installed in accordance with NEC, ANSI/NFPA American National Standards Institute/National Fire Protection Association (latest edition) (in Canada, Canadian Electrical Code CSA C22.1) and local electrical codes.

⚠ CAUTION

UNIT COMPONENT DAMAGE HAZARD

Failure to follow this caution may result in damage to the unit being installed.

1. Make all electrical connections in accordance with NEC ANSI/NFPA (latest edition) and local electrical codes governing such wiring. In Canada, all electrical connections must be in accordance with CSA standard C22.1 Canadian Electrical Code Part 1 and applicable local codes. Refer to unit wiring diagram.
2. Use only copper conductor for connections between field-supplied electrical disconnect switch and unit. DO NOT USE ALUMINUM WIRE.
3. Be sure that high-voltage power to unit is within operating voltage range indicated on unit rating plate. On 3-phase units, ensure phases are balanced within 2 percent. Consult local power company for correction of improper voltage and/or phase imbalance.
4. Insulate low-voltage wires for highest voltage contained within conduit when low-voltage control wires are in same conduit as high-voltage wires.
5. Do not damage internal components when drilling through any panel to mount electrical hardware, conduit, etc.

HIGH-VOLTAGE CONNECTIONS

When routing power leads into unit, use only copper wire between disconnect and unit. The high voltage leads should be in a conduit until they enter the duct panel; conduit termination at the duct panel must be watertight.

The unit must have a separate electrical service with a field-supplied, waterproof disconnect switch mounted at, or within sight from, the unit. Refer to the unit rating plate, NEC and local codes for maximum fuse/circuit breaker size and minimum circuit amps (ampacity) for wire sizing.

The field-supplied disconnect switch box may be mounted on the unit over the high-voltage inlet hole when the standard power and low-voltage entry points are used (See Fig. 3 and 4 for acceptable location).

See unit wiring label and Fig. 11 for reference when making high voltage connections. Proceed as follows to complete the high-voltage connections to the unit.

Single phase units:

1. Run the high-voltage (L1, L2) and ground lead into the control box.
2. Connect ground lead to chassis ground connection.
3. Locate the black and yellow wires connected to the line side of the contactor.
4. Connect field L1 to black wire on connection 11 of the compressor contactor.
5. Connect field wire L2 to yellow wire on connection 23 of the compressor contactor.

Three-phase units:

1. Run the high-voltage (L1, L2, L3) and ground lead into the control box.
2. Connect ground lead to chassis ground connection.
3. Locate the black and yellow wires connected to the line side of the contactor.
4. Connect field L1 to black wire on connection 11 of the compressor contactor.
5. Connect field wire L2 to yellow wire on connection 13 of the compressor contactor.
6. Connect field wire L3 to blue wire from compressor.

SPECIAL PROCEDURES FOR 208-V OPERATION

⚠ WARNING

ELECTRICAL SHOCK HAZARD

Failure to follow this warning could result in personal injury or death.

Make sure the power supply to the unit is switched OFF before making any wiring changes. With disconnect switch open, move black wire from transformer (3/16 in.) terminal marked 230 to terminal marked 208. This retaps transformer to primary voltage of 208 vac.

⚠ WARNING

ELECTRICAL SHOCK FIRE/EXPLOSION HAZARD

Failure to follow this warning could result in personal injury or death and property damage.

Before making any wiring changes, **make sure** the gas supply is switched off first. *Then* switch off the power supply to the unit and install lockout tag.

CONTROL VOLTAGE CONNECTIONS

Do not use any type of power-stealing thermostat. Unit control problems may result.

Use no. 18 American Wire Gage (AWG) color-coded, insulated (35°C minimum) wires to make the control voltage connections between the thermostat and the unit. If the thermostat is located more than 100 ft (30.5 m) from the unit (as measured along the control voltage wires), use no. 16 AWG color-coded, insulated (35°C minimum) wires.

STANDARD CONNECTION

Remove knockout hole located in the flue panel adjacent to the control access panel (See Fig. 3 and 4). Remove the rubber grommet from the installer's packet (included with unit) and install grommet in the knockout opening. Provide a drip loop before running wire through panel.

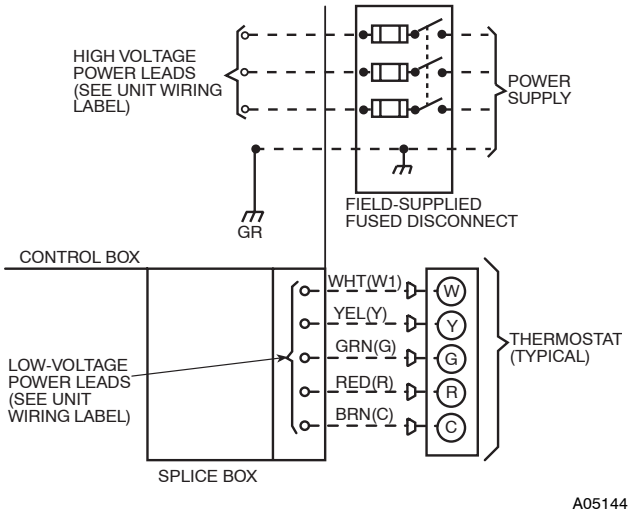

Fig. 11 - High- and Control-Voltage Connections

Run the low-voltage leads from the thermostat, through the inlet hole, and into unit low-voltage splice box.

Locate five 18-gage wires leaving control box. These low-voltage connection leads can be identified by the colors red, green, yellow, brown, and white (See Fig. 11). Ensure the leads are long enough to be routed into the low-voltage splice box (located below right side of control box). Route leads through hole in bottom of control box and make low-voltage connections (See Fig. 11). Secure all cut wires, so that they do not interfere with operation of unit.

HEAT ANTICIPATOR SETTING

The room thermostat heat anticipator must be properly adjusted to ensure proper heating performance. Set the heat anticipator, using an ammeter between the W and R terminals to determine the exact required setting.

NOTE: For thermostat selection purposes, use 0.18 amp for the approximate required setting. Failure to make a proper heat anticipator adjustment will result in improper operation, discomfort to the occupants of the conditioned space, and inefficient energy utilization; however, the required setting may be changed slightly to provide a greater degree of comfort for a particular installation.

TRANSFORMER PROTECTION

The transformer is of the energy-limiting type. It is set to withstand a 30-sec. overload or shorted secondary condition. If an overload or short is present, correct overload condition and check for blown fuse on gas control board. Replace fuse as required with correct size and rating.

PRE-START-UP

⚠ WARNING

FIRE, EXPLOSION, ELECTRICAL SHOCK HAZARD

Failure to follow this warning could result in personal injury or death.

1. Follow recognized safety practices and wear protective goggles when checking or servicing refrigerant system.
2. Do not operate compressor or provide any electric power to unit unless compressor terminal cover is in place and secured.
3. Do not remove compressor terminal cover until all electrical sources are disconnected and tagged.
4. Relieve and recover all refrigerant from system before touching or disturbing anything inside terminal box if refrigerant leak is suspected around compressor terminals.
5. Never attempt to repair soldered connection while refrigerant system is under pressure.
6. Do not use torch to remove any component. System contains oil and refrigerant under pressure.
   To remove a component, wear protective goggles and proceed as follows:
   a. Shut off electrical power to unit and install lockout tag.
   b. Relieve and reclaim all refrigerant from system using both high- and low-pressure ports.
   c. Cut component connecting tubing with tubing cutter and remove component from unit.
   d. Carefully unsweat remaining tubing stubs when necessary. Oil can ignite when exposed to torch flame.

Use the Start-Up Checklist supplied at the end of this book and proceed as follows to inspect and prepare the unit for initial start-up:

1. Remove access panel.
2. Read and follow instructions on all DANGER, WARNING, CAUTION, and INFORMATION labels attached to, or shipped with unit.
3. Make the following inspections:
   a. Inspect for shipping and handling damage, such as broken lines, loose parts, disconnected wires, etc.
   b. Inspect for oil at all refrigerant tubing connections and on unit base. Detecting oil generally indicates a refrigerant leak.
   c. Leak-test all refrigerant tubing connections using electronic leak detector, or liquid-soap solution. If a refrigerant leak is detected, see following Check for Refrigerant Leaks section.
   d. Inspect all field- and factory-wiring connections. Be sure that connections are completed and tight.
   e. Ensure wires do not touch refrigerant tubing or sharp sheet metal edges.
   f. Inspect coil fins. If damaged during shipping and handling, carefully straighten fins with a fin comb.

⚠ WARNING

FIRE, EXPLOSION HAZARD

Failure to follow this warning could result in personal injury, death or property damage.

Do not purge gas supply into the combustion chamber. Do not use a match or other open flame to check for gas leaks.

4. Verify the following conditions:
   a. Make sure gas line is free of air. Before lighting the unit for the first time, perform the following with the gas valve in the OFF position:

NOTE: If the gas supply pipe was not purged before connecting the unit, it will be full of air. It is recommended that the ground joint union be loosened, and the supply line be allowed to purge until the odor of gas is detected. Never purge gas lines into a combustion chamber. Immediately upon detection of gas odor, retighten the union. Allow 5 minutes to elapse, then light unit.

   b. Make sure that condenser-fan blade is correctly positioned in fan orifice. Top 1/3 of condenser-fan blade should be within fan orifice venturi.
   c. Ensure fan hub is positioned correctly with respect to motor housing (See Fig. 12).
   d. Make sure that air filter(s) is in place.
   e. Make sure that condensate drain trap is filled with water to ensure proper drainage.
   f. Make sure that all tools and miscellaneous loose parts have been removed.

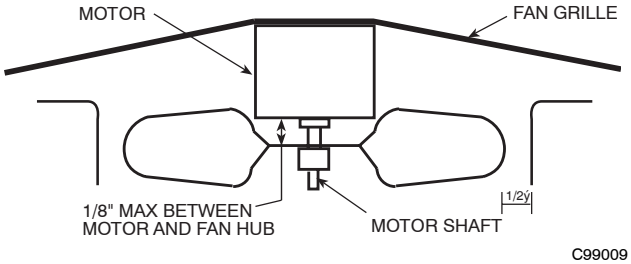

Fig. 12 - Fan Blade Clearance

START-UP

Step 1—Check for Refrigerant Leaks

Proceed as follows to locate and repair a refrigerant leak and to charge the unit:

1. Locate leak and make sure that refrigerant system pressure has been relieved and reclaimed from both high- and low-pressure ports.
2. Repair leak following accepted practices.

NOTE: Install a filter drier whenever the system has been opened for repair.

3. Add a small charge of Puron (R-410A) refrigerant vapor to system and leak-test unit.
4. Recover refrigerant from refrigerant system and evacuate to 500 microns if no additional leaks are found.
5. Charge unit with Puron (R-410A) refrigerant, using a volumetric charging cylinder or accurate scale. Refer to unit rating plate for required charge.

Step 2—Start-up Heating and Make Adjustments

Complete the required procedures given in the Pre-Start-Up section before starting the unit. Do not jumper any safety devices when operating the unit. Make sure that burner orifices are properly aligned. Unstable operation my occur when the burner orifices in the manifold are misaligned.

Follow the lighting instructions on the heating section operation label (located inside the burner or blower access door) to start the heating section.

NOTE: Make sure that gas supply has been purged, and that all gas piping has been checked for leaks.

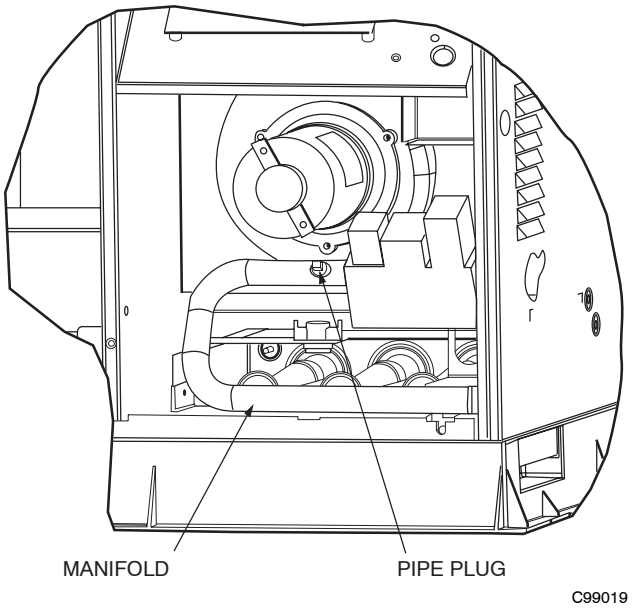

Fig. 13 - Burner Assembly

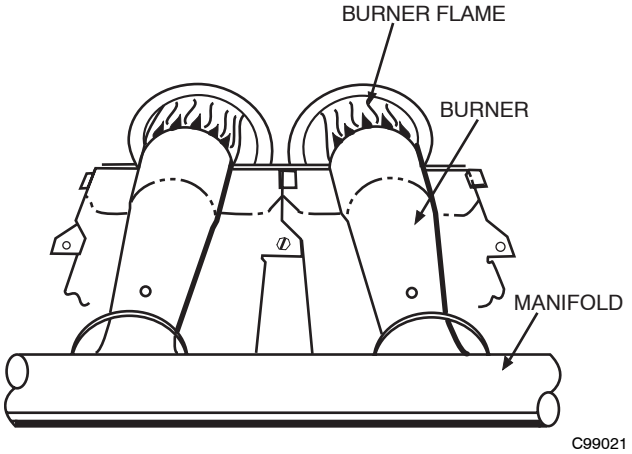

Fig. 14 - Monoport Burner

CHECK HEATING CONTROL

Start and check the unit for proper heating control operation as follows (see furnace lighting instructions located inside burner or blower access panel):

1. Place room thermostat SYSTEM switch in the HEAT position and the fan switch is placed in AUTO position.
2. Set the heating temperature control of the thermostat above room temperature.
3. The induced-draft motor will start.
4. After a call for heating, the main burner should light within 5 sec. If the burners do not light, there is a 22-sec. delay before another 5-sec. try. If the burners still do not light, this sequence is repeated. If the burners do not light within 15 minutes from the initial call for heat, there is a lockout. To reset the control, break the 24-v power to W.
5. The evaporator fan will turn on 45 sec. after the flame has been established. The evaporator fan will turn off 45 sec. after the thermostat has been satisfied.

CHECK GAS INPUT

Check gas input and manifold pressure after unit start-up (See Table 3). If adjustment is required proceed as follows:

- The rated gas inputs shown in Table 3 are for altitudes from sea level to 2000 ft above sea level. These inputs are

based on natural gas with a heating value of 1050 Btu/ft^3 at 0.65 specific gravity, or propane gas with a heating value of 2500 Btu/ft^3 at 1.5 specific gravity.

- For elevations above 2000 ft, reduce input 4% for each 1000 ft above sea level. For example at 2500 ft. a 10% total derate is required.
- When the gas supply being used has a different heating value or specific gravity, refer to national and local codes, or contact your distributor to determine the required orifice size.

⚠ CAUTION

UNIT DAMAGE HAZARD

Failure to follow this caution may result in reduced unit and/or component life.

Do Not redrill an orifice. Improper drilling (burrs, out-of-round holes, etc.) can cause excessive burner noise and misdirection of burner flame. If orifice hole appears damaged or it is suspected to have been redrilled, check orifice hole with a numbered drill bit of correct size.

ADJUST GAS INPUT

The gas input to the unit is determined by measuring the gas flow at the meter or by measuring the manifold pressure. Measuring the gas flow at the meter is recommended for natural gas units. The manifold pressure must be measured to determine the input of propane gas units.

Measure Gas Flow (Natural Gas Units)

Minor adjustment to the gas flow can be made by changing the manifold pressure. The manifold pressure must be maintained between 3.4 and 3.6 in. wc.

If larger adjustments are required, change main burner orifices following the recommendations of national and local codes.

NOTE: All other appliances that use the same meter must be turned off when gas flow is measured at the meter.

Proceed as follows:

1. Turn off gas supply to unit.
2. Remove pipe plug on manifold (See Fig. 13) and connect manometer. Turn on gas supply to unit.
3. Record number of seconds for gas meter test dial to make one revolution.
4. Divide number of seconds in Step 3 into 3600 (number of seconds in one hr).
5. Multiply result of Step 4 by the number of cubic feet (cu ft) shown for one revolution of test dial to obtain cubic feet (cu ft) of gas flow per hour.
6. Multiply result of Step 5 by Btu heating value of gas to obtain total measured input in Btuh. Compare this value with heating input shown in Table 3 (Consult the local gas supplier if the heating value of gas is not known).

EXAMPLE: Assume that the size of test dial is 1 cu ft, one revolution takes 32 sec, and the heating value of the gas is 1050 Btu/ft^3. Proceed as follows:

1. 32 sec. to complete one revolution.
2. 3600 ÷ 32 = 112.5.
3. 112.5 x 1 =112.5 ft3 of gas flow/hr.
4. 112.5 x 1050 = 118,125 Btuh input.

If the desired gas input is 115,000 Btuh, only a minor change in the manifold pressure is required.

Observe manifold pressure and proceed as follows to adjust gas input:

1. Remove cover screw over regulator adjustment screw on gas valve.
2. Turn regulator adjustment screw clockwise to increase gas input, or turn regulator adjustment screw counterclockwise to decrease input. Manifold pressure must be between 3.4 and 3.6 in. wc.

⚠ WARNING

FIRE AND UNIT DAMAGE HAZARD

Failure to follow this warning could result in personal injury or death and/or property damage.

Unsafe operation of the unit may result if manifold pressure is outside this range.

3. Replace cover screw cap on gas valve.
4. Turn off gas supply to unit. Remove manometer from pressure tap and replace pipe plug on gas valve. Turn on gas to unit and check for leaks.

Measure Manifold Pressure (Propane Units)

The main burner orifices on a propane gas unit are sized for the unit rated input when the manifold pressure reading matches the level specified in Table 3.

Proceed as follows to adjust gas input on a propane gas unit:

1. Turn off gas to unit.
2. Remove pipe plug on manifold and connect manometer (See Fig. 13).
3. Turn on gas to unit.
4. Remove cover screw over regulator adjustment screw on gas valve.
5. Adjust regulator adjustment screw to the correct manifold pressure, as specified in Table 3. Turn adjusting screw clockwise to increase manifold pressure, or turn adjusting screw counterclockwise to decrease manifold pressure.
6. Replace cover screw.
7. Turn off gas to unit. Remove manometer from pressure tap. Replace pipe plug on gas valve, then turn on gas to unit. Check for leaks.

CHECK BURNER FLAME

With burner access panel removed, observe the unit heating operation. Watch the burner flames to see if they are light blue and soft in appearance, and that the flames are approximately the same for each burner. Propane will have blue flame (See Fig. 14). Refer to the Maintenance section for information on burner removal.

AIRFLOW AND TEMPERATURE RISE

The heating section for each size unit is designed and approved for heating operation within the temperature-rise range stamped on the unit rating plate.

Table 8 shows the approved temperature rise range for each heating input, and the air delivery cfm at various temperature rises. The heating operation airflow must produce a temperature rise that falls within the approved range.

Refer to Indoor Airflow and Airflow Adjustments section to adjust heating airflow when required.

An LED (light-emitting diode) indicator is provided on the control board to monitor operation. The control board is located by removing the burner access panel. During normal operation, the LED is continuously on (See Table 4 for error codes).

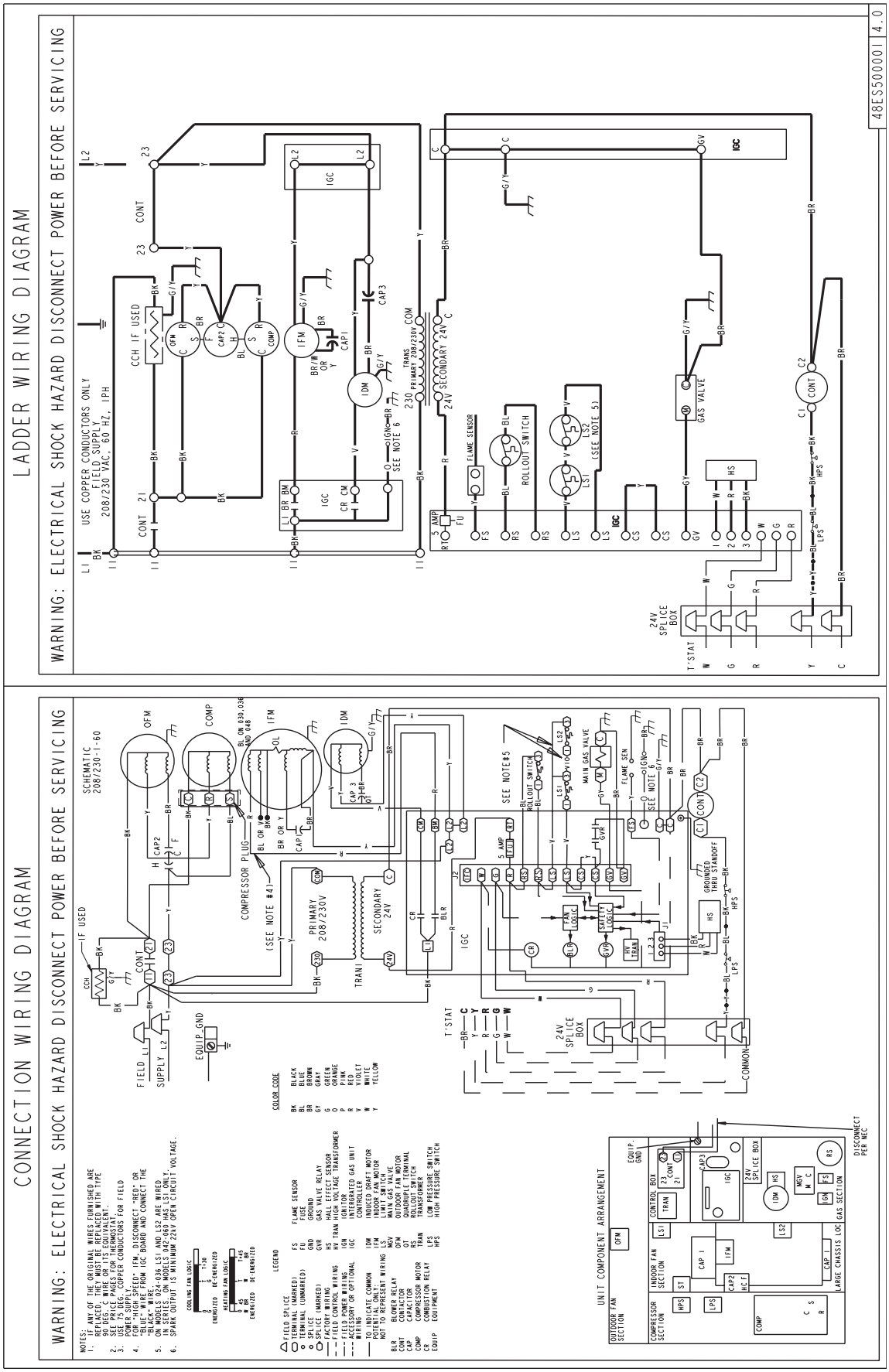

A07230

Fig. 15 - 208/230-1-60 Wiring Diagram

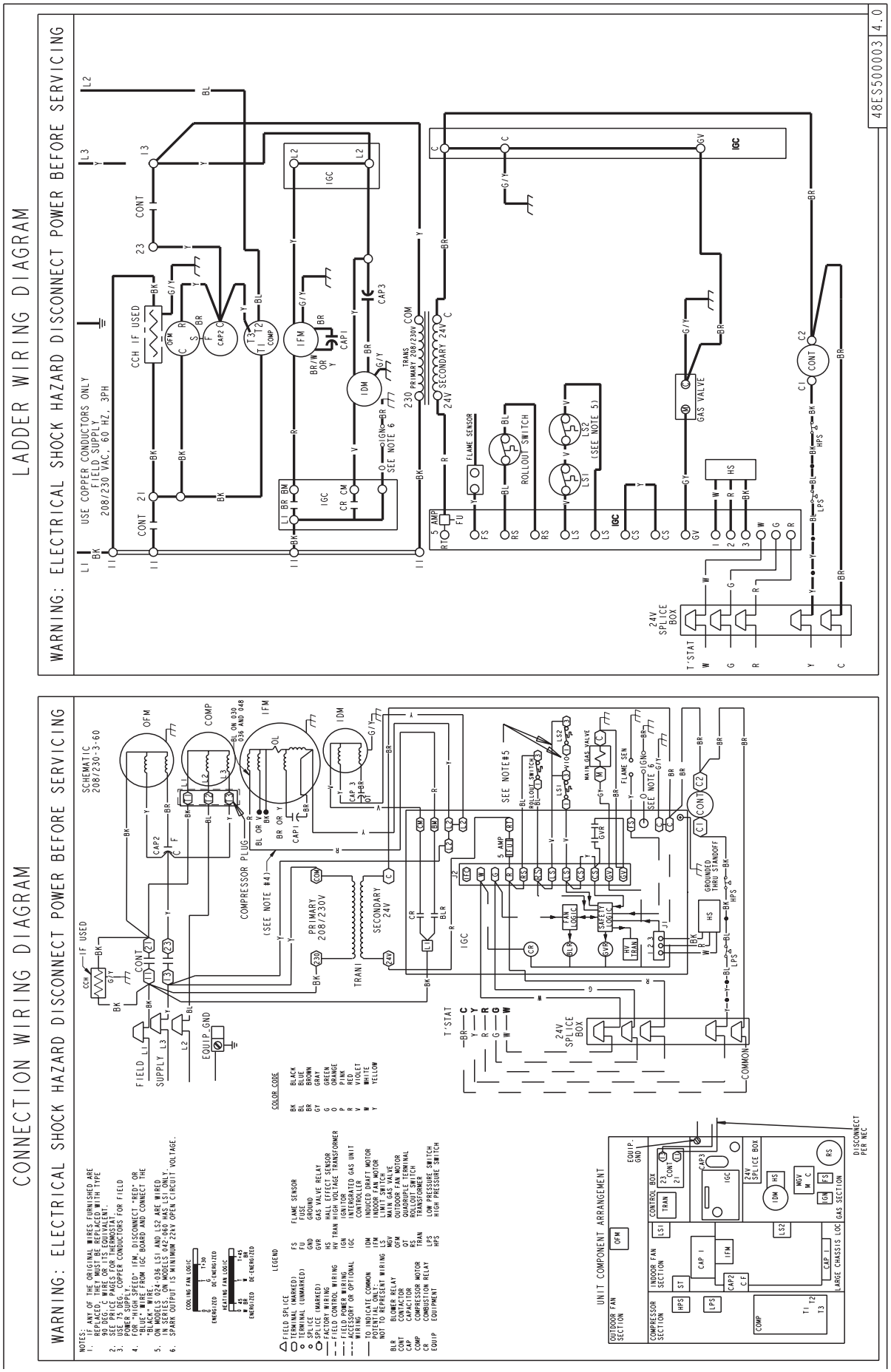

A07232

Fig. 16 - 208/230-3-60 Wiring Diagram

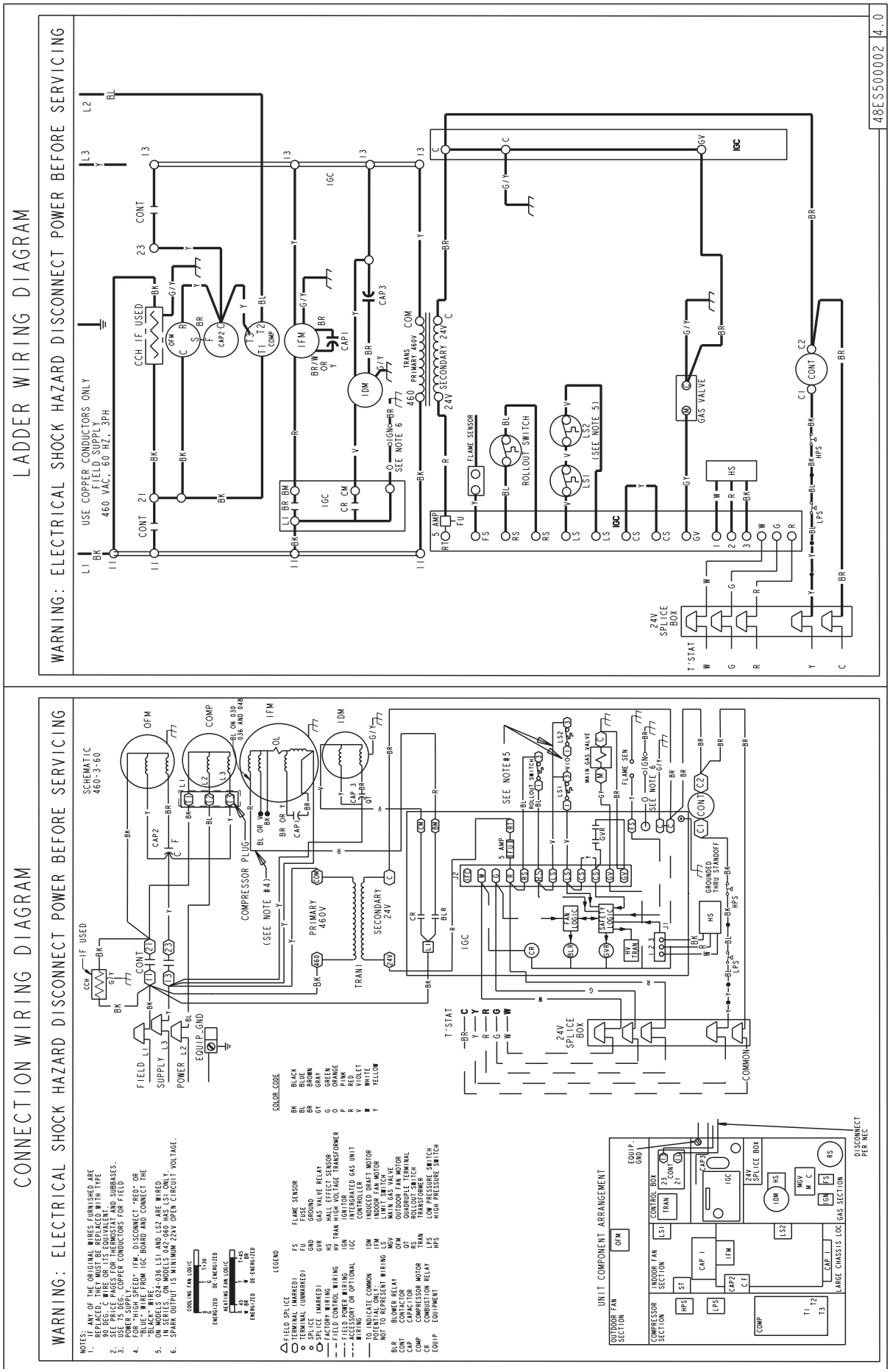

A07231

Fig. 17 - 460-3-60 Wiring Diagram

Table 3—Heating Inputs

HEATING INPUT (BTUH)	NUMBER OF ORIFICES	GAS SUPPLY PRESSURE (IN. WC)				MANIFOLD PRESSURE (IN. WC)	
		Natural†		Propane*†			
		Min	Max	Min	Max	Natural†	Propane*†
40,000	2	4.0	13.0	4.0	13.0	3.5	3.5
60,000	2	4.0	13.0	4.0	13.0	3.5	3.5
90,000	3	4.0	13.0	4.0	13.0	3.5	3.4
115,000	3	4.0	13.0	4.0	13.0	3.5	3.7
130,000	3	4.0	13.0	4.0	13.0	3.5	3.5

*When a unit is converted to propane, different size orifices must be used. See separate, natural-to-propane conversion kit instructions.

†Based on altitudes from sea level to 2000 ft above sea level. For altitudes above 2000 ft, reduce input rating 4 percent for each additional 1000 ft above sea level. In Canada, from 2000 ft above sea level to 4500 ft above sea level, derate the unit 10 percent.

HEATING SEQUENCE OF OPERATION

(See Fig. 15-17 and unit wiring label.)

On a call for heating, terminal W of the thermostat is energized, starting the induced-draft motor. When the hall-effect sensor on the induced-draft motor senses that it has reached the required speed, the burner sequence begins. This function is performed by the integrated gas control (IGC). The indoor (evaporator)-fan motor is energized 45 sec after flame is established. When the thermostat is satisfied and W is de-energized, the burners stop firing and the indoor (evaporator) fan motor shuts off after a 45-sec time-off delay.

LIMIT SWITCHES

Normally closed limit switch (LS) completes the control circuit. Should the leaving-air temperature rise above the maximum allowable temperature, the limit switch opens and the control circuit "breaks." Any interruption in the control circuit instantly closes the gas valve and stops gas flow to the burners and pilot. The blower motor continues to run until LS resets.

When the air temperature at the limit switch drops to the low-temperature setting of the limit switch, the switch closes and completes the control circuit. The direct-spark ignition system cycles and the unit returns to normal heating operation.

Table 4—LED Indications

ERROR CODE	LED INDICATION
Normal Operation	On
Hardware Failure	Off
Fan On/Off Delay Modified	1 Flash
Limit Switch Fault	2 Flashes
Flame Sense Fault	3 Flashes
Four Consecutive Limit Switch Faults	4 Flashes
Ignition Lockout Fault	5 Flashes
Induced-Draft Motor Fault	6 Flashes
Rollout Switch Fault	7 Flashes
Internal Control Fault	8 Flashes
Temporary Lock-Out (1 hr)	9 Flashes

NOTES:
1. There is a 3 sec pause between error code displays.
2. If more than one error code exists, all applicable error codes will be displayed in numerical sequence.
3. This chart is on the wiring diagram located inside the burner access panel.

ROLLOUT SWITCH

The function of the rollout switch is to close the main gas valve in the event of flame rollout. The switch is located above the main burners. When the temperature at the rollout switch reaches the maximum allowable temperature, the control circuit trips, closing the gas valve and stopping gas flow to the burners. The indoor (evaporator) fan motor (IFM) and induced draft motor continue to run until switch is reset. The IGC LED will display FAULT CODE 7.

Step 3—Start-up Cooling and Make Adjustments

Complete the required procedures given in the Pre-Start-Up section before starting the unit. Do not jumper any safety devices when operating the unit. Do not operate the compressor when the outdoor temperature is below 40°F (4.4°C) (unless accessory low-ambient kit is installed). Do not rapid-cycle the compressor. Allow 5 minutes between on cycles to prevent compressor damage.

CHECKING COOLING CONTROL OPERATION

Start and check the unit for proper cooling control operation as follows:

1. Place room thermostat SYSTEM switch in OFF position. Observe that blower motor starts when FAN switch is placed in ON position and shuts down when FAN switch is placed in AUTO position.
2. Place SYSTEM switch in COOL position and FAN switch in AUTO position. Set cooling control below room temperature. Observe that compressor, condenser fan, and evaporator blower motors start. Observe that cooling cycle shuts down when control setting is satisfied. The evaporator fan will continue to run for 30 sec.
3. When using an auto-changeover room thermostat, place both SYSTEM and FAN switches in AUTO positions. Observe that unit operates in Heating mode when temperature control is set to call for heating (above room temperature) and operates in Cooling mode when temperature control is set to call for cooling (below room temperature).

IMPORTANT: Three-phase, scroll compressors are direction oriented. Unit must be checked to ensure proper compressor 3-phase power lead orientation. If not corrected within 5 minutes, the internal protector will shut off the compressor. The 3-phase power leads to the unit must be reversed to correct rotation. When turning backwards, the difference between compressor suction and discharge pressures will be minimal.

CHECKING AND ADJUSTING REFRIGERANT CHARGE

The refrigerant system is fully charged with Puron® (R-410A) refrigerant and is tested and factory sealed. Allow system to operate a minimum of 15 minutes before checking or adjusting charge.

NOTE:Adjustment of the refrigerant charge is not required unless the unit is suspected of not having the proper Puron® (R-410A) charge.

The charging label and the tables shown refer to system temperatures and pressures in cooling mode only. A refrigerant charging label is attached to the outside of the service access door. The chart includes the required liquid line temperature at given discharge line pressures and outdoor ambient temperatures.

An accurate subcooling, thermocouple- or thermistor-type thermometer, and a gauge manifold are required when using the subcooling charging method for evaluating the unit charge. Do not use mercury or small dial-type thermometers because they are not adequate for this type of measurement.

⚠ CAUTION

UNIT DAMAGE HAZARD

Failure to follow this caution may result in unit damage.

When evaluating the refrigerant charge, an indicated adjustment to the specified factory charge must always be very minimal. If a substantial adjustment is indicated, an abnormal condition exists somewhere in the cooling system, such as insufficient airflow across either coil or both coils.

Proceed as follows:

1. Remove caps from low- and high-pressure service fittings.
2. Using hoses with valve core depressors, attach low- and high-pressure gauge hoses to low- and high-pressure service fittings, respectively.
3. Start unit in Cooling Mode and let unit run until system pressures stabilize.
4. Measure and record the following:
   a. Outdoor ambient-air temperature (°F (°C)db).
   b. Liquid line temperature (°F (°C).
   c. Discharge (high-side) pressure (psig).
5. Using "Cooling Charging Charts," compare outdoor-air temperature(°F (°C) db) with the discharge line pressure (psig) to determine desired system operating liquid line temperature (See Table 6).
6. Compare actual liquid line temperature with desired liquid line temperature. Using a tolerance of ± 2°F (±1.1°C), add refrigerant if actual temperature is more than 2°F (±1.1°C) higher than proper liquid line temperature, or remove refrigerant if actual temperature is more than 2°F (±1.1°C) lower than required liquid line temperature.

NOTE: If the problem causing the inaccurate readings is a refrigerant leak, refer to the Check for Refrigerant Leaks section.

INDOOR AIRFLOW AND AIRFLOW ADJUSTMENTS

⚠ CAUTION

UNIT OPERATION HAZARD

Failure to follow this caution may result in unit damage.

For cooling operation, the recommended airflow is 350 to 450 cfm for each 12,000 Btuh of rated cooling capacity. For heating operation, the airflow must produce a temperature rise that falls within the range stamped on the unit rating plate.

Table 8 shows the temperature rise in each heating mode. Refer to these tables to determine the desired heating airflow for the system being installed. (See Table 9 for wet coil pressure drop).

NOTE: Be sure that all supply-and return-air grilles are open, free from obstructions, and adjusted properly. Airflow can be changed using the User Interface.

⚠ WARNING

ELECTRICAL SHOCK HAZARD

Failure to follow this warning could result in personal injury or death.

Disconnect electrical power to the unit and install lockout tag before changing blower speed.

Airflow can be changed by changing the lead connections of the blower motor.

All 574D units are factor wired for low speed except sizes 030 and 048 which are wired for medium speed.

FOR 208/230V

For color coding on the 208/230V motor leads, see Table 5.

Table 5—Color Coding for 208/230V Motor Leads

BLACK = HIGH SPEED
Blue = Medium Speed
Red = Low Speed

To change the speed of the indoor fan motor (IFM), remove the fan motor speed leg lead from the blower relay (BR). This wire is attached to terminal blower motor (BM) of the integrated gas control (IGC) board for single-phase units. To change the speed, remove and replace with lead for desired blower motor speed. Insulate the removed lead to avoid contact with chassis parts.

COOLING SEQUENCE OF OPERATION

With the room thermostat SYSTEM switch in the COOL position and the FAN switch in the AUTO position, the cooling sequence of operation is as follows:

1. When the room temperature rises to a point that is slightly above the cooling control setting of the thermostat, the thermostat completes the circuit between thermostat terminal R to terminals Y and G.
2. The normally open contacts of energized contactor (C) close and complete the circuit through compressor motor (COMP) to condenser (outdoor) fan motor (OFM). Both motors start instantly.
3. The set of normally open contacts of energized relay BM close and complete the circuit through evaporator blower (indoor) fan motor (IFM).

NOTE: Once the compressor has started and then stopped, it should not be started again until 5 minutes have elapsed. The cooling cycle remains on until the room temperature drops to a point that is slightly below the cooling control setting of the room thermostat. At this point, the thermostat breaks the circuit between thermostat terminal R to terminals Y and G. These open circuits deenergize contactor coil C. The condenser and compressor motors stop. After a 30-sec. delay, the blower motor stops. The unit is in a standby condition, waiting for the next call for cooling from the room thermostat.

Table 6—Cooling Charging Chart

Required Subcooling oF (oC)					
Model Size	Outdoor Ambient Temperature				
	75 (24)	85 (29)	95 (35)	105 (41)	115 (46)
018	13 (7.2)	14 (7.8)	15 (5.0)	16 (8.9)	16 (8.9)
024	10 (5.6)	11 (6.1)	11 (6.1)	12 (6.7)	13 (7.2)
030	12 (6.7)	13 (7.2)	14 (7.8)	15 (5.0)	15 (5.0)
036	14 (7.8)	14 (7.8)	14 (7.8)	14 (7.8)	14 (7.8)
042	11 (6.1)	11 (6.1)	11 (6.1)	10 (5.6)	9 (5.0)
048	8 (4.4)	7 (3.9)	7 (3.9)	7 (3.9)	6 (3.3)
060	14 (7.8)	13 (7.2)	12 (6.7)	11 (6.1)	10 (5.6)

Charging Procedure

1- Measure Discharge line pressure by attaching a gauge to the service port.

2- Measure the Liquid line temperature by attaching a temperature sensing device to it.

3- Insulate the temperature sensing device so that the Outdoor Ambient doesn't affect the reading.

4- Refer to the required Subcooling in the table based on the model size and the Outdoor Ambient temperature.

5- Interpolate if the Outdoor ambient temperature lies in between the table values.

6- Find the Pressure Value in the table corresponding to the the measured Pressure of the Compressor Discharge line.

7- Read across from the Pressure reading to obtain the Liquid line temperature for a required Subcooling

8- Add Charge if the measured temperature is higher than the table value.

9 - Remove charge if the measured temperature is lower than the table value.

50ES500006 REV 2.0

Required Liquid Line Temperature for a Specific Subcooling (R-410A)														
Pressure (psig)		Required Subcooling (°F)					Pressure (kPa)		Required Subcooling (°C)				
		5	10	15	20	25			3	6	8	11	14
189	66	61	56	51	46	41	1303	19	16	13	11	8	5
196	68	63	58	53	48	43	1351	20	17	15	12	9	6
203	71	66	61	56	51	46	1399	21	19	16	13	10	8
210	73	68	63	58	53	48	1448	23	20	17	14	11	9
217	75	70	65	60	55	50	1496	24	21	18	15	13	10
224	77	72	67	62	57	52	1544	25	22	19	16	14	11
231	79	74	69	64	59	54	1593	26	23	20	18	15	12
238	81	76	71	66	61	56	1641	27	24	21	19	16	13
245	82	77	72	67	62	57	1689	28	25	22	20	17	14
252	84	79	74	69	64	59	1737	29	26	23	21	18	15
260	86	81	76	71	66	61	1792	30	27	25	22	19	16
268	88	83	78	73	68	63	1848	31	29	26	23	20	17
276	90	85	80	75	70	65	1903	32	30	27	24	21	19
284	92	87	82	77	72	67	1958	33	31	28	25	22	20
292	94	89	84	79	74	69	2013	35	32	29	26	23	21
300	96	91	86	81	76	71	2068	36	33	30	27	24	22
309	98	93	88	83	78	73	2130	37	34	31	28	26	23
318	100	95	90	85	80	75	2192	38	35	32	29	27	24
327	102	97	92	87	82	77	2254	39	36	33	31	28	25
336	104	99	94	89	84	79	2316	40	37	34	32	29	26
345	106	101	96	91	86	81	2378	41	38	35	33	30	27
354	108	103	98	93	88	83	2440	42	39	36	34	31	28
364	110	105	100	95	90	85	2509	43	40	38	35	32	29
374	112	107	102	97	92	87	2578	44	41	39	36	33	30
384	113	108	103	98	93	88	2647	45	42	40	37	34	31
394	115	110	105	100	95	90	2716	46	44	41	38	35	32
404	117	112	107	102	97	92	2785	47	45	42	39	36	33
414	119	114	109	104	99	94	2854	48	46	43	40	37	34
424	121	116	111	106	101	96	2923	49	47	44	41	38	35
434	123	118	113	108	103	98	2992	50	48	45	42	39	36
444	124	119	114	109	104	99	3061	51	48	46	43	40	37
454	126	121	116	111	106	101	3130	52	49	47	44	41	38
464	128	123	118	113	108	103	3199	53	50	48	45	42	39
474	129	124	119	114	109	104	3268	54	51	48	46	43	40
484	131	126	121	116	111	106	3337	55	52	49	47	44	41
494	132	127	122	117	112	107	3406	56	53	50	47	45	42
504	134	129	124	119	114	109	3475	57	54	51	48	46	43
514	136	131	126	121	116	111	3544	58	55	52	49	46	44
524	137	132	127	122	117	112	3612	58	56	53	50	47	45
534	139	134	129	124	119	114	3681	59	56	54	51	48	45

Table 7—Filter Pressure Drop Table (in. wc)

FILTER SIZE	CFM																		
	500	600	700	800	900	1000	1100	1200	1300	1400	1500	1600	1700	1800	1900	2000	2100	2200	2300
20X20X1	0.05	0.07	0.08	0.1	0.12	0.13	0.14	0.15	—	—	—	—	—	—	—	—	—	—	—
24X30X1	—	—	—	0.04	0.05	0.06	0.07	0.07	0.08	0.09	0.1	—	—	—	—	—	—	—	—
24X36X1	—	—	—	—	—	—	—	0.06	0.07	0.07	0.08	0.09	0.09	0.10	0.11	0.12	0.13	0.14	0.14

Table 8—Dry Coil Air Delivery* - Horizontal and Downflow Discharge - Unit 574D024-060 (Deduct 10% for 208 Volts)

Unit	Heating Rise Range °F (°C)	Motor Speed		External Static Pressure (in. wc)								
				0.1	0.2	0.3	0.4	0.5	0.6	0.7	0.8	0.9
574D018040	30 – 60 (17 – 33)	Low[1]	Watts	260	243	229	217	209	– –	– –	– –	– –
			CFM	859	775	667	536	382	– –	– –	– –	– –
			Heating Rise °F	35	39	45	56	NA	NA	NA	NA	NA
			°C	19	22	25	31					
		High	Watts	340	328	317	307	300	294	– –	– –	– –
			CFM	1064	948	820	680	528	364	– –	– –	– –
			Heating Rise °F	NA	32	37	44	57	NA	NA	NA	NA
			°C		18	20	25	32				
574D024040	20 – 50 (11 – 28)	Low[1]	Watts	311	309	304	301	286	290	286	280	– –
			CFM	935	885	820	757	686	583	423	263	– –
			Heating Rise °F	32	34	37	40	44	NA	NA	NA	NA
			°C	18	19	20	22	24				
		Medium	Watts	411	405	398	390	379	357	357	345	327
			CFM	1195	1155	1100	1028	957	868	769	647	365
			Heating Rise °F	25	26	27	29	31	35	39	46	NA
			°C	14	14	15	16	17	19	22	26	
		High	Watts	528	518	509	492	477	467	447	435	421
			CFM	1484	1421	1368	1279	1185	1088	970	853	712
			Heating Rise °F	20	21	22	23	25	28	31	35	42
			°C	11	12	12	13	14	15	17	20	23

Table 8 Con't—Dry Coil Air Delivery* - Horizontal and Downflow Discharge - Unit 574D024-060 (Deduct 10% for 208 Volts)

Unit	Heating Rise Range °F (°C)	Motor Speed		External Static Pressure (in. wc)								
				0.1	0.2	0.3	0.4	0.5	0.6	0.7	0.8	0.9
574D024060	35 – 65 (19 – 36)	Low[1]	Watts	311	309	304	301	286	290	286	280	– –
			CFM	935	885	820	757	686	583	423	263	– –
			Heating Rise °F	48	51	55	59	NA	NA	NA	NA	NA
			°C	27	28	30	33					
		Medium	Watts	411	405	398	390	379	357	357	345	327
			CFM	1195	1155	1100	1028	957	868	769	647	365
			Heating Rise °F	38	39	41	44	47	52	59	NA	NA
			°C	21	22	23	24	26	29	33		
		High	Watts	528	518	509	492	477	467	447	435	421
			CFM	1484	1421	1368	1279	1185	1088	970	853	712
			Heating Rise °F	NA	NA	NA	35	38	41	46	53	63
			°C				20	21	23	26	29	35
574D030040	20 – 50 (11 – 28)	Low	Watts	311	309	304	301	286	290	286	280	– –
			CFM	935	885	820	757	686	583	423	263	– –
			Heating Rise °F	32	34	37	40	44	NA	NA	NA	NA
			°C	18	19	20	22	24				
		Medium[1]	Watts	411	405	398	390	379	357	357	345	327
			CFM	1195	1155	1100	1028	957	868	769	647	365
			Heating Rise °F	25	26	27	29	31	35	39	46	NA
			°C	14	14	15	16	17	19	22	26	
		High	Watts	528	518	509	492	477	467	447	435	421
			CFM	1484	1421	1368	1279	1185	1088	970	853	712
			Heating Rise °F	20	21	22	23	25	28	31	35	42
			°C	11	12	12	13	14	15	17	20	23
574D030060	35 – 65 (19 – 36)	Low	Watts	311	309	304	301	286	290	286	280	– –
			CFM	935	885	820	757	686	583	423	263	– –
			Heating Rise °F	48	51	55	59	NA	NA	NA	NA	NA
			°C	27	28	30	33					
		Medium[1]	Watts	411	405	398	390	379	357	357	345	327
			CFM	1195	1155	1100	1028	957	868	769	647	365
			Heating Rise °F	38	39	41	44	47	52	59	NA	NA
			°C	21	22	23	24	26	29	33		
		High	Watts	528	518	509	492	477	467	447	435	421
			CFM	1484	1421	1368	1279	1185	1088	970	853	712
			Heating Rise °F	NA	NA	NA	35	38	41	46	53	63
			°C				20	21	23	26	29	35
574D036060	25 – 55 (14 – 31)	Low[1]	Watts	439	429	415	401	395	380	356	339	329
			CFM	1242	1170	1089	994	917	837	702	570	442
			Heating Rise °F	36	38	41	45	49	54	NA	NA	NA
			°C	20	21	23	25	27	30			
		Medium	Watts	503	491	479	461	450	436	418	404	389
			CFM	1320	1244	1162	1081	1005	897	767	662	541
			Heating Rise °F	34	36	39	42	45	50	NA	NA	NA
			°C	19	20	22	23	25	28			
		High	Watts	641	627	623	609	601	588	571	559	548
			CFM	1362	1288	1205	1119	1033	933	826	714	580
			Heating Rise °F	33	35	37	40	44	48	54	NA	NA
			°C	18	19	21	22	24	27	30		
574D036090	40 – 70 (22 – 39)	Low[1]	Watts	439	429	415	401	395	380	356	339	329
			CFM	1242	1170	1089	994	917	837	702	570	442
			Heating Rise °F	54	58	62	68	NA	NA	NA	NA	NA
			°C	30	32	34	38					
		Medium	Watts	503	491	479	461	450	436	418	404	389
			CFM	1320	1244	1162	1081	1005	897	767	662	541
			Heating Rise °F	51	54	58	62	67	NA	NA	NA	NA
			°C	28	30	32	35	37				
		High	Watts	641	627	623	609	601	588	571	559	548
			CFM	1362	1288	1205	1119	1033	933	826	714	580
			Heating Rise °F	50	52	56	60	65	NA	NA	NA	NA
			°C	28	29	31	34	36				
574D042060	25 – 55 (14 – 31)	Low[1]	Watts	559	540	522	503	483	464	445	425	406
			CFM	1405	1370	1330	1283	1230	1171	1106	1034	957
			Heating Rise °F	32	33	34	35	37	38	41	44	47
			°C	18	18	19	19	20	21	23	24	26
		Medium	Watts	665	647	629	609	589	567	545	521	497
			CFM	1593	1552	1505	1452	1394	1330	1260	1184	1102
			Heating Rise °F	28	29	30	31	32	34	36	38	41
			°C	16	16	17	17	18	19	20	21	23
		High	Watts	815	795	775	754	734	715	695	676	656
			CFM	1764	1710	1652	1591	1525	1456	1383	1306	1225
			Heating Rise °F	26	26	27	28	30	31	33	34	37
			°C	14	14	15	16	16	17	18	19	20
574D042090	40 – 70 (22 – 39)	Low[1]	Watts	559	540	522	503	483	464	445	425	406
			CFM	1405	1370	1330	1283	1230	1171	1106	1034	957
			Heating Rise °F	48	49	51	53	55	58	61	65	NA
			°C	27	27	28	29	30	32	34	36	
		Medium	Watts	665	647	629	609	589	567	545	521	497
			CFM	1593	1552	1505	1452	1394	1330	1260	1184	1102
			Heating Rise °F	42	43	45	46	48	51	54	57	61
			°C	24	24	25	26	27	28	30	32	34
		High	Watts	815	795	775	754	734	715	695	676	656
			CFM	1764	1710	1652	1591	1525	1456	1383	1306	1225
			Heating Rise °F	NA	NA	41	42	44	46	49	52	55
			°C			23	24	25	26	27	29	31

574D

Table 8 Con't—Dry Coil Air Delivery* - Horizontal and Downflow Discharge - Unit 574D024-060 (Deduct 10% for 208 Volts)

Unit	Heating Rise Range °F (°C)	Motor Speed		External Static Pressure (in. wc)								
				0.1	0.2	0.3	0.4	0.5	0.6	0.7	0.8	0.9
574D048090	25 – 55 (14 – 31)	Low	Watts	627	617	607	584	567	548	528	503	480
			CFM	1550	1530	1493	1461	1414	1361	1320	1250	1177
			Heating Rise °F	44	44	45	46	48	50	51	54	NA
			°C	24	24	25	26	27	28	28	30	
		Medium[1]	Watts	771	755	734	711	690	665	639	607	572
			CFM	1798	1771	1734	1687	1645	1595	1530	1449	1355
			Heating Rise °F	38	38	39	40	41	42	44	47	50
			°C	21	21	22	22	23	24	25	26	28
		High	Watts	969	941	908	887	858	827	804	767	748
			CFM	2124	2071	2000	1944	1876	1811	1735	1647	1555
			Heating Rise °F	32	33	34	35	36	37	39	41	43
			°C	18	18	19	19	20	21	22	23	24
574D048115	35 – 65 (19 – 36)	Low	Watts	627	617	607	584	567	548	528	503	480
			CFM	1550	1530	1493	1461	1414	1361	1320	1250	1177
			Heating Rise °F	56	56	58	59	61	63	65	NA	NA
			°C	31	31	32	33	34	35	36		
		Medium[1]	Watts	771	755	734	711	690	665	639	607	572
			CFM	1798	1771	1734	1687	1645	1595	1530	1449	1355
			Heating Rise °F	48	49	50	51	52	54	56	60	64
			°C	27	27	28	28	29	30	31	33	35
		High	Watts	969	941	908	887	858	827	804	767	748
			CFM	2124	2071	2000	1944	1876	1811	1735	1647	1555
			Heating Rise °F	41	42	43	44	46	48	50	52	55
			°C	23	23	24	25	26	26	28	29	31
574D048130	40 – 70 (22 – 39)	Low	Watts	627	617	607	584	567	548	528	503	480
			CFM	1550	1530	1493	1461	1414	1361	1320	1250	1177
			Heating Rise °F	63	64	65	67	69	NA	NA	NA	NA
			°C	35	35	36	37	38				
		Medium[1]	Watts	771	755	734	711	690	665	639	607	572
			CFM	1798	1771	1734	1687	1645	1595	1530	1449	1355
			Heating Rise °F	54	55	56	58	59	61	64	67	NA
			°C	30	31	31	32	33	34	35	37	
		High	Watts	969	941	908	887	858	827	804	767	748
			CFM	2124	2071	2000	1944	1876	1811	1735	1647	1555
			Heating Rise °F	46	47	49	50	52	54	56	59	63
			°C	26	26	27	28	29	30	31	33	35
574D060090	25 – 55 (14 – 31)	Low[1]	Watts	786	769	754	736	722	705	684	658	616
			CFM	2027	1960	1901	1821	1759	1693	1616	1513	1354
			Heating Rise °F	33	34	36	37	38	40	42	45	50
			°C	19	19	20	21	21	22	23	25	28
		Medium	Watts	873	849	833	815	798	782	763	748	704
			CFM	2095	2026	1962	1887	1817	1748	1679	1583	1439
			Heating Rise °F	32	33	34	36	37	39	40	43	47
			°C	18	19	19	20	21	21	22	24	26
		High	Watts	1012	993	981	963	948	927	904	886	846
			CFM	2184	2109	2036	1963	1886	1812	1729	1647	1496
			Heating Rise °F	31	32	33	34	36	37	39	41	45
			°C	17	18	18	19	20	21	22	23	25
574D060115	35 – 65 (19 – 36)	Low[1]	Watts	786	769	754	736	722	705	684	658	616
			CFM	2027	1960	1901	1821	1759	1693	1616	1513	1354
			Heating Rise °F	43	44	45	47	49	51	53	57	64
			°C	24	24	25	26	27	28	30	32	35
		Medium	Watts	873	849	833	815	798	782	763	748	704
			CFM	2095	2026	1962	1887	1817	1748	1679	1583	1439
			Heating Rise °F	41	43	44	46	47	49	51	54	60
			°C	23	24	24	25	26	27	29	30	33
		High	Watts	1012	993	981	963	948	927	904	886	846
			CFM	2184	2109	2036	1963	1886	1812	1729	1647	1496
			Heating Rise °F	39	41	42	44	46	48	50	52	58
			°C	22	23	24	24	25	26	28	29	32
574D060130	40 – 70 (22 – 39)	Low[1]	Watts	786	769	754	736	722	705	684	658	616
			CFM	2027	1960	1901	1821	1759	1693	1616	1513	1354
			Heating Rise °F	48	50	51	54	55	58	60	64	NA
			°C	27	28	28	30	31	32	34	36	
		Medium	Watts	873	849	833	815	798	782	763	748	704
			CFM	2095	2026	1962	1887	1817	1748	1679	1583	1439
			Heating Rise °F	47	48	50	52	54	56	58	62	68
			°C	26	27	28	29	30	31	32	34	38
		High	Watts	1012	993	981	963	948	927	904	886	846
			CFM	2184	2109	2036	1963	1886	1812	1729	1647	1496
			Heating Rise °F	45	46	48	50	52	54	56	59	65
			°C	25	26	27	28	29	30	31	33	36

* Air delivery values are without air filter and are for dry coil (See Table 15 - 574D Wet Coil Pressure Drop table).

[1] Factory-shipped heating/cooling speed

NA = Not allowed for heating speed

Note: Deduct field-supplied air filter pressure drop and wet coil pressure drop to obtain external static pressure available for ducting.

Table 9—574D Wet Coil Pressure Drop

UNIT SIZE	STANDARD CFM (S.C.F.M.)															
	500	600	700	800	900	1000	1100	1200	1300	1400	1500	1600	1700	1800	1900	2000
018	0.011	0.013	0.018	0.022	-	-	-	-	-	-	-	-	-	-	-	-
024	-	0.030	0.037	0.044	0.053	0.063	-	-	-	-	-	-	-	-	-	-
030	-	-	0.037	0.044	0.053	0.063	0.072	0.081	0.105	-	-	-	-	-	-	-
036	-	-	-	-	0.05	0.061	0.072	0.080	0.090	0.110	-	-	-	-	-	-
042	-	-	-	-	-	0.044	0.051	0.059	0.065	0.072	0.080	0.088	0.095	0.105	-	-
048	-	-	-	-	-	-	-	0.044	0.050	0.053	0.059	0.066	0.072	0.077	0.086	-
060	-	-	-	-	-	-	-	-	-	-	0.079	0.087	0.095	0.102	0.113	0.123

MAINTENANCE

To ensure continuing high performance and to minimize the possibility of premature equipment failure, periodic maintenance must be performed on this equipment. This unit should be inspected at least once each year by a qualified service person. To troubleshoot unit, refer to Table 10, Troubleshooting Chart.

NOTE TO EQUIPMENT OWNER: Consult your local dealer about the availability of a maintenance contract.

⚠ WARNING

PERSONAL INJURY AND UNIT DAMAGE HAZARD

Failure to follow this warning could result in personal injury or death and unit component damage.

The ability to properly perform maintenance on this equipment requires certain expertise, mechanical skills, tools and equipment. If you do not possess these, do not attempt to perform any maintenance on this equipment, other than those procedures recommended in the Owner's Manual.

⚠ WARNING

ELECTRICAL SHOCK HAZARD

Failure to follow these warnings could result in personal injury or death:

1. Turn off electrical power to the unit before performing any maintenance or service on this unit.
2. Use extreme caution when removing panels and parts.
3. Never place anything combustible either on or in contact with the unit.

⚠ CAUTION

UNIT OPERATION HAZARD

Failure to follow this caution may result in improper operation.

Errors made when reconnecting wires may cause improper and dangerous operation. Label all wires prior to disconnecting when servicing.

The minimum maintenance requirements for this equipment are as follows:

1. Inspect air filter(s) each month. Clean or replace when necessary.
2. Inspect indoor coil, drain pan, and condensate drain each cooling season for cleanliness. Clean when necessary.
3. Inspect blower motor and wheel for cleanliness at the beginning of each heating and cooling season. Clean when necessary. For first heating and cooling season, inspect blower wheel bi-monthly to determine proper cleaning frequency.
4. Check electrical connections for tightness and controls for proper operation each heating and cooling season. Service when necessary.
5. Ensure electric wires are not in contact with refrigerant tubing or sharp metal edges.
6. Check and inspect heating section before each heating season. Clean and adjust when necessary.
7. Check flue hood and remove any obstructions, if necessary.

AIR FILTER

IMPORTANT: Never operate the unit without a suitable air filter in the return-air duct system. Always replace the filter with the same dimensional size and type as originally installed. See Table 1 for recommended filter sizes.

Inspect air filter(s) at least once each month and replace (throwaway-type) or clean (cleanable-type) at least twice during each cooling season and twice during the heating season, or whenever the filter becomes clogged with dust and lint.

INDOOR BLOWER AND MOTOR

NOTE: All motors are pre-lubricated. Do not attempt to lubricate these motors.

For longer life, operating economy, and continuing efficiency, clean accumulated dirt and grease from the blower wheel and motor annually.

⚠ WARNING

ELECTRICAL SHOCK HAZARD

Failure to follow this warning could result in personal injury or death.

Disconnect and tag electrical power to the unit before cleaning and lubricating the blower motor and wheel.

To clean the blower motor and wheel:

1. Remove and disassemble blower assembly as follows:
   a. Remove unit access panel.
   b. Disconnect motor lead from blower relay (BM). Disconnect yellow lead from terminal L2 of the contactor.
   c. On all units remove blower assembly from unit. Remove screws securing blower to blower partition and slide assembly out. Be careful not to tear insulation in blower compartment.
   d. Ensure proper reassembly by marking blower wheel and motor in relation to blower housing before disassembly.
   e. Loosen setscrew(s) that secures wheel to motor shaft, remove screws that secure motor mount brackets to housing, and slide motor and motor mount out of housing.
2. Remove and clean blower wheel as follows:

a. Ensure proper reassembly by marking wheel orientation.

b. Lift wheel from housing. When handling and/or cleaning blower wheel, be sure not to disturb balance weights (clips) on blower wheel vanes.

c. Remove caked-on dirt from wheel and housing with a brush. Remove lint and/or dirt accumulations from wheel and housing with vacuum cleaner, using soft brush attachment. Remove grease and oil with mild solvent.

d. Reassemble wheel into housing.

e. Reassemble motor into housing. Be sure setscrews are tightened on motor shaft flats and not on round part of shaft.

f. Reinstall unit access panel.

3. Restore electrical power to unit. Start unit and check for proper blower rotation and motor speeds during heating and cooling cycles.

FLUE GAS PASSAGEWAYS

To inspect the flue collector box and upper areas of the heat exchanger:

1. Remove the combustion blower wheel and motor assembly according to directions in the Combustion-Air Blower section.
2. Remove the 3 screws holding the blower housing to the flue collector box cover (See Fig. 18-21).
3. Remove the 12 screws holding the flue collector box cover (See Fig. 20-21) to the heat exchanger assembly. Inspect the heat exchangers.

4. Clean all surfaces, as required, using a wire brush.

INDUCED DRAFT (COMBUSTION AIR) BLOWER

Clean periodically to assure proper airflow and heating efficiency. Inspect blower wheel every fall and periodically during the heating season. For the first heating season, inspect blower wheel bimonthly to determine proper cleaning frequency.

To inspect blower wheel, remove draft hood assembly. Shine a flashlight into opening to inspect wheel. If cleaning is required, remove motor and wheel as follows:

1. Remove unit access panel (See Fig. 19).
2. Remove the 7 screws that attach induced-draft motor mounting plate to blower housing (See Fig. 20).
3. Slide the motor and blower wheel assembly out of the blower housing (See Fig. 20). Clean the blower wheel. If additional cleaning is required, continue with Steps 4 and 5.
4. To remove blower, remove 2 setscrews.
5. To remove motor and cooling fan assembly, remove 4 screws that hold blower housing to mounting plate.
6. To reinstall, reverse the procedure outlined above.

LIMIT SWITCH

Remove unit access panel. Limit switch is located on the blower partition.

BURNER IGNITION

Unit is equipped with a direct spark ignition 100 percent lockout system. Ignition module is located in the control box (See Fig. 18).Module contains a self-diagnostic LED. During servicing, refer to label diagram for LED interpretation.

If lockout occurs, unit may be reset by either momentarily interrupting power supply to unit or by turning selector switch to OFF position at the thermostat.

MAIN BURNERS

At the beginning of each heating season, inspect for deterioration or blockage due to corrosion or other causes. Observe the main burner flames and adjust, if necessary.

Removal of Gas Train

To remove the gas train for servicing:

1. Shut off main gas valve.
2. Shut off power to unit and install lockout tag.
3. Remove unit access panel (See Fig. 19).
4. Disconnect gas piping at unit gas valve.
5. Remove wires connected to gas valve. Mark each wire.
6. Remove ignitor and sensor wires at the ignitor module.
7. Remove the mounting screw that attaches the burner rack to the unit base (See Fig. 18).
8. Slide the burner rack out of the unit (See Fig. 18 and 21).
9. To reinstall, reverse the procedure outlined above.

OUTDOOR COIL, INDOOR COIL, AND CONDENSATE DRAIN PAN

Inspect the condenser coil, evaporator coil, and condensate drain pan at least once each year.

The coils are easily cleaned when dry; therefore, inspect and clean the coils either before or after each cooling season. Remove all obstructions, including weeds and shrubs, that interfere with the airflow through the condenser coil.

Straighten bent fins with a fin comb. If coated with dirt or lint, clean the coils with a vacuum cleaner, using the soft brush attachment. Be careful not to bend the fins. If coated with oil or grease, clean the coils with a mild detergent and water solution. Rinse coils with clear water, using a garden hose. Be careful not to splash water on motors, insulation, wiring, or air filter(s). For best results, spray condenser coil fins from inside to outside the unit. On units with an outer and inner condenser coil, be sure to clean between the coils. Be sure to flush all dirt and debris from the unit base.

Inspect the drain pan and condensate drain line when inspecting the coils. Clean the drain pan and condensate drain by removing all foreign matter from the pan. Flush the pan and drain trough with clear water. Do not splash water on the insulation, motor, wiring, or air filter(s). If the drain trough is restricted, clear it with a “plumbers snake” or similar probe device.

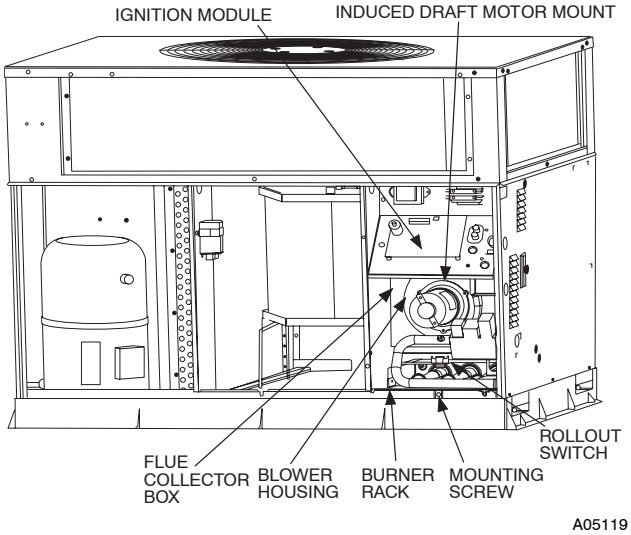

Fig. 18 - Blower Housing and Flue Collector Box

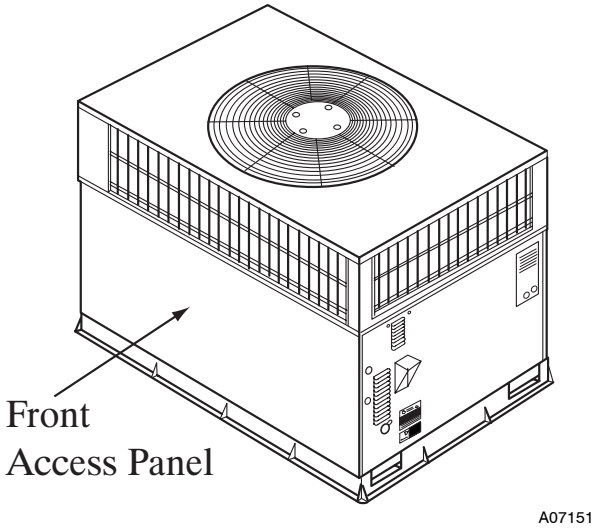

Fig. 19 - Unit Access Panel

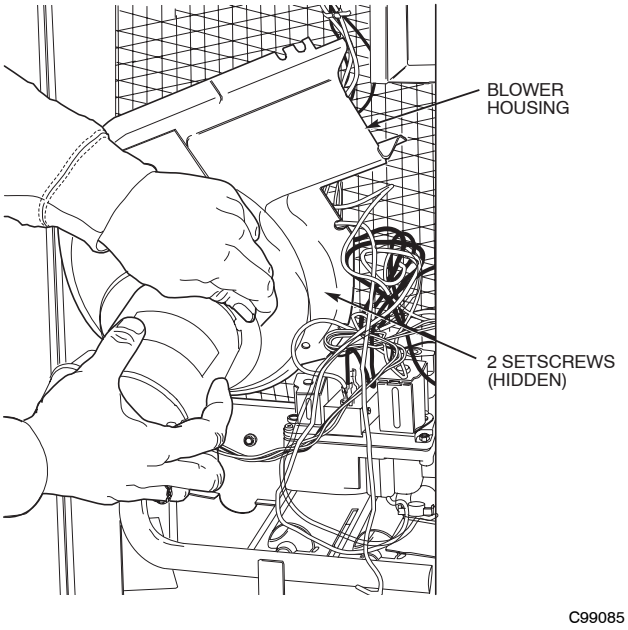

Fig. 20 - Removal of Motor and Blower Wheel

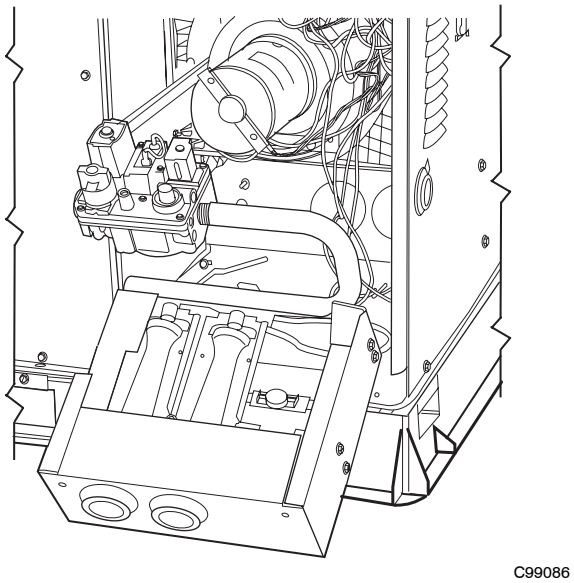

Fig. 21 - Burner Rack Removed

OUTDOOR FAN

⚠ CAUTION

UNIT OPERATION HAZARD

Failure to follow this caution may result in damage to unit components.

Keep the condenser fan free from all obstructions to ensure proper cooling operation. Never place articles on top of the unit.

1. Remove 6 screws holding outdoor grille and motor to top cover.
2. Turn motor/grille assembly upside down on top cover to expose fan blade.
3. Inspect the fan blades for cracks or bends.
4. If fan needs to be removed, loosen setscrew and slide fan off motor shaft.
5. When replacing fan blade, position blade so that the hub is 1/8 in. away from the motor end (1/8 in. (3.175mm) of motor shaft will be visible) (See Fig. 12).
6. Ensure that setscrew engages the flat area on the motor shaft when tightening.
7. Replace grille.

ELECTRICAL CONTROLS AND WIRING

Inspect and check the electrical controls and wiring annually. Be sure to turn off the electrical power to the unit.

Remove access panel to locate all the electrical controls and wiring. Check all electrical connections for tightness. Tighten all screw connections. If any smoky or burned connections are noticed, disassemble the connection, clean all the parts, re-strip the wire end and reassemble the connection properly and securely.

After inspecting the electrical controls and wiring, replace all the panels. Start the unit, and observe at least one complete cooling cycle to ensure proper operation. If discrepancies are observed in operating cycle, or if a suspected malfunction has occurred, check each electrical component with the proper electrical instrumentation. Refer to the unit wiring label when making these checks.

REFRIGERANT CIRCUIT

Annually inspect all refrigerant tubing connections and the unit base for oil accumulations. Detecting oil generally indicates a refrigerant leak.

⚠ WARNING

EXPLOSION, PERSONAL INJURY HAZARD

Failure to follow this warning could result in personal injury, death or property damage.

System under pressure. Relieve pressure and recover all refrigerant before system repair or final unit disposal. Use all service ports and open all flow-control devices, including solenoid valves.

If oil is detected or if low cooling performance is suspected, leak-test all refrigerant tubing using an electronic leak-detector, halide torch, or liquid-soap solution. If a refrigerant leak is detected, refer to the Check for Refrigerant Leaks section.

If no refrigerant leaks are found and low cooling performance is suspected, refer to the Checking and Adjusting Refrigerant Charge section.

GAS INPUT

The gas input does not require checking unless improper heating performance is suspected. If a problem exists, refer to the Start-Up section.

EVAPORATOR AIRFLOW

The heating and/or cooling airflow does not require checking unless improper performance is suspected. If a problem exists, be sure that all supply- and return-air grilles are open and free from obstructions, and that the air filter is clean. When necessary, refer to the Indoor Airflow and Airflow Adjustments section to check the system airflow.

PURON ITEMS

METERING DEVICE (Thermostatic Expansion Valve)

This metering device is a hard shutoff, balance port TXV. The TXV maintains a constant superheat at the evaporator exit resulting in higher overall system efficiency.

PRESSURE SWITCHES

Pressure switches are protective devices wired into control circuit (low voltage). They shut off compressor if abnormally high or low pressures are present in the refrigeration circuit. These pressure switches are specifically designed to operate with Puron (R-410A) systems. R-22 pressure switches must not be used as replacements for the Puron (R-410A) system.

LOSS OF CHARGE SWITCH

This switch is located on the liquid line and protects against low suction pressures caused by such events as loss of charge, low airflow across indoor coil, dirty filters, etc. It opens on a pressure drop at about 20 psig. If system pressure is above this, switch should be closed. To check switch:

1. Turn off all power to unit.
2. Disconnect leads on switch.
3. Apply ohm meter leads across switch. You should have continuity on a good switch.

NOTE:Because these switches are attached to refrigeration system under pressure, it is not advisable to remove this device for troubleshooting unless you are reasonably certain that a problem exists. If switch must be removed, remove and recover all system charge so that pressure gauges read 0 psi. Never open system without breaking vacuum with dry nitrogen.

HIGH-PRESSURE SWITCH

The high-pressure switch is located in the discharge line and protects against excessive condenser coil pressure. It opens at 650 psig.

High pressure may be caused by a dirty outdoor coil, failed fan motor, or outdoor air recirculation. To check switch:

1. Turn off all power to unit.
2. Disconnect leads on switch.
3. Apply ohm meter leads across switch. You should have continuity on a good switch.

COPELAND SCROLL COMPRESSOR (PURON REFRIGERANT)

The compressor used in this product is specifically designed to operate with Puron (R-410A) refrigerant and cannot be interchanged.

The compressor is an electrical (as well as mechanical) device. Exercise extreme caution when working near compressors. Power should be shut off, if possible, for most troubleshooting techniques. Refrigerants present additional safety hazards.

⚠ WARNING

FIRE/EXPLOSION HAZARD

Failure to follow this warning could result in personal injury or death and/or property damage.

Wear safety glasses and gloves when handling refrigerants. Keep torches and other ignition sources away from refrigerants and oils.

The scroll compressor pumps refrigerant throughout the system by the interaction of a stationary and an orbiting scroll. The scroll compressor has no dynamic suction or discharge valves, and it is more tolerant of stresses caused by debris, liquid slugging, and flooded starts. The compressor is equipped with an anti-rotational device and an internal pressure relief port. The anti-rotational device prevents the scroll from turning backwards and replaces the need for a cycle protector. The pressure relief port is a safety device, designed to protect against extreme high pressure. The relief port has an operating range between 550 (26.34 kPa) and 625 psi (29.93 kPa) differential pressure.

The Copeland scroll compressor uses Mobil 3MAF POE oil. Copeland Ultra 22 CC should be used if additional oil is needed in the field. Mobil Arctic EAL22CC or ICI Emkarate RL22 or 32CF oil may be used to recharge these compressors if Ultra 22 is not available.

⚠ WARNING

UNIT OPERATION AND SAFETY HAZARD

Failure to follow this warning could result in personal injury or equipment damage.

This system uses Puron (R-410A) refrigerant which has higher operating pressures than R-22 and other refrigerants. No other refrigerant may be used in this system. Gauge set, hoses, and recovery system must be designed to handle Puron. If you are unsure, consult the equipment manufacturer.

REFRIGERANT SYSTEM

This information covers the refrigerant system of the 574D, including the compressor oil needed, servicing systems on roofs containing synthetic materials, the filter drier and refrigerant charging.

Compressor Oil

The compressor in this system uses a polyolester (POE) oil, Mobil 3MAF POE. This oil is extremely hygroscopic, meaning it absorbs water readily. POE oils can absorb 15 times as much water as other oils designed for HCFC and CFC refrigerants. Take all necessary precautions to avoid exposure of the oil to the atmosphere.

SERVICING SYSTEMS ON ROOFS WITH SYNTHETIC-MATERIALS

POE (polyolester) compressor lubricants are known to cause long term damage to some synthetic roofing materials.

Exposure, even if immediately cleaned up, may cause embrittlement (leading to cracking) to occur in one year or more. When performing any service that may risk exposure of compressor oil to the roof, take appropriate precautions to protect roofing. Procedures which risk oil leakage include, but are not limited to, compressor replacement, repairing refrigerant leaks, replacing refrigerant components such as filter drier, pressure switch, metering device, coil, accumulator, or reversing valve.

Synthetic Roof Precautionary Procedure

1. Cover extended roof working area with an impermeable polyethylene (plastic) drip cloth or tarp. Cover an approximate 10 X 10 ft. area.
2. Cover area in front of the unit service panel with a terry cloth shop towel to absorb lubricant spills and prevent run-offs, and protect drop cloth from tears caused by tools or components.
3. Place terry cloth shop towel inside unit immediately under component(s) to be serviced and prevent lubricant run-offs through the louvered openings in the unit base.
4. Perform required service.
5. Remove and dispose of any oil contaminated material per local codes.

LIQUID LINE FILTER DRIER

This filter drier is specifically designed to operate with Puron. Use only factory-authorized components. Filter drier must be replaced whenever the refrigerant system is opened. When removing a filter drier, use a tubing cutter to cut the drier from the system. Do not unsweat a filter drier from the system. Heat from unsweating will release moisture and contaminants from drier into system.

PURON (R-410A) REFRIGERANT CHARGING

Refer to unit information plate and charging chart. Some R-410A refrigerant cylinders contain a dip tube to allow liquid refrigerant to flow from cylinder in upright position. For cylinders equipped with a dip tube, charge Puron units with cylinder in upright position and a commercial metering device in manifold hose. Charge refrigerant into suction-line.

TROUBLESHOOTING

Use the Troubleshooting Guides (See Tables 10-12) if problems occur with these units.

START-UP CHECKLIST

Use Start-Up checklist to ensure proper start-up procedures are followed.

PURON® (R-410A) QUICK REFERENCE GUIDE

- Puron refrigerant operates at 50-70 percent higher pressures than R-22. Be sure that servicing equipment and replacement components are designed to operate with Puron
- Puron refrigerant cylinders are rose colored.
- Recovery cylinder service pressure rating must be 400 psig, DOT 4BA400 or DOT BW400.
- Puron systems should be charged with liquid refrigerant. Use a commercial type metering device in the manifold hose when charging into suction line with compressor operating
- Manifold sets should be 700 psig high side and 180 psig low side with 550 psig low-side retard.
- Use hoses with 700 psig service pressure rating.
- Leak detectors should be designed to detect HFC refrigerant.
- Puron, as with other HFCs, is only compatible with POE oils.
- Vacuum pumps will not remove moisture from oil.
- Do not use liquid-line filter driers with rated working pressures less than 600 psig.
- Do not leave Puron suction line filter driers in line longer than 72 hrs.
- Do not install a suction-line filter drier in liquid line.
- POE oils absorb moisture rapidly. Do not expose oil to atmosphere.
- POE oils may cause damage to certain plastics and roofing materials.
- Wrap all filter driers and service valves with wet cloth when brazing.
- A factory approved liquid-line filter drier is required on every unit.
- Do NOT use an R-22 TXV.
- If indoor unit is equipped with an R-22 TXV or piston metering device, it must be changed to a hard shutoff Puron TXV.
- Never open system to atmosphere while it is under a vacuum.
- When system must be opened for service, recover refrigerant, evacuate then break vacuum with dry nitrogen and replace filter driers. Evacuate to 500 microns prior to recharging.
- Do not vent Puron into the atmosphere.
- Do not use capillary tube coils.
- Observe all **warnings**, **cautions**, and **bold** text.
- All indoor coils must be installed with a hard shutoff Puron TXV metering device.

Table 10—Troubleshooting Chart

SYMPTOM	CAUSE	REMEDY
Compressor and condenser fan will not start.	Power failure	Call power company
	Fuse blown or circuit breaker tripped	Replace fuse or reset circuit breaker
	Defective contactor, transformer, or high-pressure, loss-of-charge or low-pressure switch	Replace component
	Insufficient line voltage	Determine cause and correct
	Incorrect or faulty wiring	Check wiring diagram and rewire correctly
	UI setting too high	Lower UI temperature setting below room temperature
Compressor will not start but condenser fan runs	Faulty wiring or loose connections in compressor circuit	Check wiring and repair or replace
	Compressor motor burned out, seized, or internal overload open	Determine cause Replace compressor
	Defective run/start capacitor, overload, start relay	Determine cause and replace
	One leg of 3-phase power dead	Replace fuse or reset circuit breaker Determine cause
	Low input voltage (20% low)	Determine cause and correct
Three-phase scroll compressor makes excessive noise, and there may be a low pressure differential.	Scroll compressor is rotating in the wrong direction	Correct the direction of rotation by reversing the 3-phase power leads to the unit. Shut down unit to allow pressures to equalize.
Compressor cycles (other than normally satisfying UI)	Refrigerant overcharge or undercharge	Recover refrigerant, evacuate system, and recharge to capacities shown on rating plate
	Defective compressor	Replace and determine cause
	Insufficient line voltage	Determine cause and correct
	Blocked outdoor coil	Determine cause and correct
	Defective run/start capacitor	Determine cause and replace
	Faulty outdoor fan motor or capacitor	Replace
	Restriction in refrigerant system	Locate restriction and remove
Compressor operates continuously	Dirty air filter	Replace filter
	Unit undersized for load	Decrease load or increase unit size
	UI temperature set too low	Reset UI
	Low refrigerant charge	Locate leak, repair, and recharge
	Air in system	Recover refrigerant, evacuate system, and recharge
	Outdoor coil dirty or restricted	Clean coil or remove restriction
Excessive head pressure	Dirty air filter	Replace filter
	Dirty condenser coil	Clean coil
	Refrigerant overcharged	Recover excess refrigerant
	Air in system	Recover refrigerant, evacuate system, and recharge
	Condenser air restricted or air short-cycling	Determine cause and correct
Head pressure too low	Low refrigerant charge	Check for leaks, repair, and recharge.
	Restriction in liquid tube	Remove restriction
Excessive suction pressure	High heat load	Check for source and eliminate
	Compressor valves leaking	Replace compressor
	Refrigerant overcharged	Recover excess refrigerant
Suction pressure too low	Dirty air filter	Replace filter
	Low refrigerant charge	Check for leaks, repair and recharge
	Metering device or low side restricted	Remove source of restriction
	Insufficient evaporator airflow	Increase air quantity Check filter–replace if necessary
	Temperature too low in conditioned area	Reset UI
	Outdoor ambient below 55°F	Install low-ambient kit
	Filter drier restricted	Replace filter

Table 11—Troubleshooting Guide–Heating

SYMPTOM	CAUSE	REMEDY
Burners will not ignite	Water in gas line	Drain. Install drip leg.
	No power to furnace	Check power supply fuses, wiring or circuit breaker.
	No 20-v power supply to control circuit	Check transformer. NOTE: Some transformers have internal over-current protection that requires a cool-down period to reset.
	Mis-wired or loose connections	Check all wiring and wire nut connections
	Misaligned spark electrodes	Check flame ignition and sense electrode positioning. Adjust as necessary.
	No gas at main burners	1. Check gas line for air. Purge as necessary. NOTE: After purging gas line of air, wait at least 5 minutes for any gas to dissipate before attempting to light unit. 2. Check gas valve.
Inadequate heating	Dirty air filter	Clean or replace filter as necessary
	Gas input to furnace too low	Check gas pressure at manifold match with that on unit nameplate
	Unit undersized for application	Replace with proper unit or add additional unit
	Restricted airflow	Clean or replace filter. Remove any restriction.
	Limit switch cycles main burners	Check rotation of blower, temperature rise of unit. Adjust as necessary.
Poor flame characteristics	Incomplete combustion results in: Aldehyde odors, carbon monoxide, sooting flame, floating flame	1. Tighten all screws around burner compartment 2. Cracked heat exchanger. Replace. 3. Unit over-fired. Reduce input (change orifices or adjust gas line or manifold pressure). 4. Check burner alignment. 5. Inspect heat exchanger for blockage. Clean as necessary.

Table 12—Troubleshooting Guide–LED Error Codes

SYMPTOM	CAUSE	REMEDY
Hardware failure (LED OFF)	Loss of power to control module (IGC)*.	Check 5-amp fuse son IGC*, power to unit, 24-v circuit breaker, and transformer. Units without a 24-v circuit breaker have an internal overload in the 24-v transformer. If the overload trips, allow 10 minutes for automatic reset.
Fan ON/OFF delay modified (LED/FLASH)	High limit switch opens during heat exchanger warm-up period before fan-on delay expires. Limit switch opens within three minutes after blower-off delay timing in heating mode.	Ensure unit is fired on rate; ensure temperature rise is correct. Ensure unit's external static pressure is within application guidelines.
Limit switch faults (LED 2 flashes)	High temperature limit switch is open.	Check the operation of the indoor (evaporator) fan motor. Ensure that the supply-air temperature rise is in accordance with the range on the unit nameplate. Clean or replace filters.
Flame sense fault (LED 3 flashes)	The IGC* sensed flame that should not be present.	Reset unit. If problem persists, replace control board.
4 consecutive limit switch faults (LED 4 flashes)	Inadequate airflow to unit.	Check the operation of the indoor (evaporator) fan motor and that supply-air temperature rise agrees with range on unit nameplate information.
Ignition lockout (LED 5 flashes)	Unit unsuccessfully attempted ignition for 15 minutes.	Check ignitor and flame sensor electrode spacing, gaps, etc. Ensure that fame sense and ignition wires are properly terminated. Verify that unit is obtaining proper amount of gas.
Induced-draft motor fault (LED 6 flashes)	IGC does not sense that induced-draft motor is operating.*	Check for proper voltage. If motor is operating, check the speed sensor plug/IGC Terminal J2 connection. Proper connection: PIN 1 - White PIN 2 - Red PIN 3 - Black
Rollout switch fault (LED 7 flashes)	Rollout switch has opened.	Rollout switch will automatically reset, but IGC* will continue to lockout unit. Check gas valve operation. Ensure that induced-draft blower wheel is properly secured to motor shaft. Inspect heat exchanger. Reset unit at unit disconnect.
Internal control fault (LED 8 flashes)	Microprocessor has sensed an error in the software or hardware.	If error code is not cleared by resetting unit power, replace the IGC*.
Temporary software lockout (LED 9 flashes)	Electrical interference impeding IGC software	Reset 24-v. to control board or turn thermostat off, then on again. Fault will automatically reset itself in one (1) hour.

***WARNING ⚠:** If the IGC must be replaced, be sure to ground yourself to dissipate any electrical charge that my be present before handling new control board. The IGC is sensitive to static electricity and my be damaged if the necessary precautions are not taken.

IMPORTANT: Refer to Table 11-Troubleshooting Guide-Heating for additional troubleshooting analysis.

LEGEND

IGC—Integrated Gas Unit Controller

LED—Light-Emitting Diode

START-UP CHECKLIST
(Remove and Store in Job File)

I. Preliminary Information

MODEL NO.:_____

SERIAL NO.:_____

DATE:_____

TECHNICIAN:_____

II. PRE-START-UP (Insert checkmark in box as each item is completed)

( ) VERIFY THAT ALL PACKING MATERIALS HAVE BEEN REMOVED FROM UNIT

( ) REMOVE ALL SHIPPING HOLD DOWN BOLTS AND BRACKETS PER INSTALLATION INSTRUCTIONS

( ) CHECK ALL ELECTRICAL CONNECTIONS AND TERMINALS FOR TIGHTNESS

( ) CHECK GAS PIPING FOR LEAKS (WHERE APPLICABLE)

( ) CHECK THAT INDOOR (EVAPORATOR) AIR FILTER IS CLEAN AND IN PLACE

( ) VERIFY THAT UNIT INSTALLATION IS LEVEL

( ) CHECK FAN WHEEL, AND PROPELLER FOR LOCATION IN HOUSING/ORIFICE AND SETSCREW TIGHTNESS

574D

III. START-UP

ELECTRICAL

SUPPLY VOLTAGE _____

COMPRESSOR AMPS_____

INDOOR (EVAPORATOR) FAN AMPS_____

TEMPERATURES

OUTDOOR (CONDENSER) AIR TEMPERATURE _____DB

RETURN-AIR TEMPERATURE _____DB _____WB

COOLING SUPPLY AIR _____DB _____WB

GAS HEAT SUPPLY AIR _____

PRESSURES

GAS INLET PRESSURE _____ IN.WG

GAS MANIFOLD PRESSURE _____ IN.WG

REFRIGERANT SUCTION _____PSIG SUCTION LINE TEMP*_____

REFRIGERANT DISCHARGE _____PSIG DISCHARGE TEMP†_____

( ) VERIFY REFRIGERANT CHARGE USING CHARGING CHARTS

GAS HEAT TEMPERATURE RISE

TEMPERATURE RISE (See Literature) RANGE _____

MEASURED TEMPERATURE RISE_____

*Measured at suction inlet to compressor

†Measured at liquid line leaving condenser.

Copyright 2007 Bryant Corp. • 7310 W. Morris St. • Indianapolis, IN 46231

Printed in U.S.A. Edition Date: 04/07

Catalog No: II574D−18−2

Manufacturer reserves the right to change, at any time, specifications and designs without notice and without obligations.

Replaces:II574D-18-1