installation and start-up instructions

NON-PROGRAMMABLE THERMOSTAT

TSTAT

Cancels: II TSTAT-0-5 II TSTAT-0-7
2-96

NOTE: Read the entire instruction manual before starting the installation.

This symbol → indicates a change since the last issue.

SAFETY CONSIDERATIONS

Read and follow manufacturer instructions carefully. Follow all local electrical codes during installation. All wiring must conform to local and national electrical codes. Improper wiring or installation may damage thermostat.

Recognize safety information. This is the safety-alert symbol ⚠ . When you see this symbol on the equipment and in the instruction manual, be alert to the potential for personal injury.

Understand the signal words DANGER, WARNING, and CAUTION. These words are used with the safety-alert symbol. DANGER identifies the most serious hazards which **will** result in severe personal injury or death. WARNING signifies a hazard which **could** result in personal injury or death. CAUTION is used to identify unsafe practices which **would** result in minor personal injury or product and property damage.

INTRODUCTION

BDP's thermostats are wall-mounted, low-voltage thermostats which maintain room temperature by controlling the operation of a heating and air conditioning system. Separate heating and cooling setpoints, plus auto changeover provide maximum comfort and flexibility. Batteries are not required; temperature and mode settings are preserved with the power off.

INSTALLATION CONSIDERATIONS

POWER

Note that all thermostat models require no batteries and are not "power stealing". They do require 24 VAC (both R and C terminals) to be connected for proper operation. Thermostat will not operate without these 2 connections.

MODELS

There are 3 different models. The 9th and 10th letters of the part number indicate the model. These 2 letters also appear on the package and on the circuit board. Be sure to have the proper thermostat for the intended application. Models are:

AC - 1-stage cool, 1-stage heat - for AC systems only.
HP - 1-stage cool, 2-stage heat - for either HP, or AC with 2-stage heat.
2S - 2-stage cool, 2-stage heat - for 2-speed AC systems, or 2-stage cool, 3-stage heat - for 2-speed HP systems.

USE EACH ONLY FOR ITS INTENDED PURPOSE. SEE TABLE 1.

INSTALLATION

I. THERMOSTAT LOCATION

Thermostat should be mounted:

- Approximately 5 ft (1.5m) from floor.
- Close to or in a frequently used room, preferably on an inside partitioning wall.

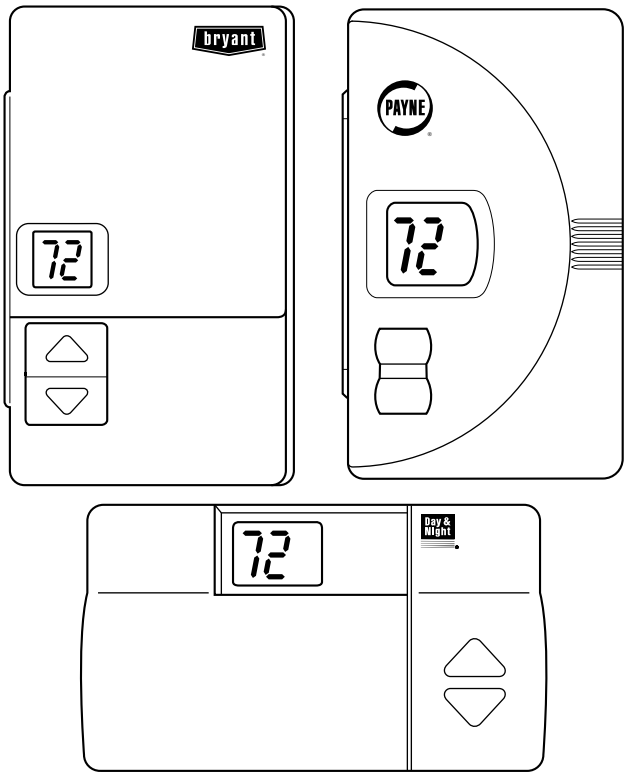

A94135

BRAND	HEIGHT (IN.)	WIDTH (IN.)	DEPTH (IN.)
Bryant	5-3/4	3-1/2	1-3/8
Day & Night	3-1/2	5-3/4	1-3/8
Payne	5-3/4	3-1/2	1-3/8

Fig. 1—Bryant, Day & Night, and Payne Non-Programmable Thermostats

- On a section of wall without pipes or duct work.

Thermostat should NOT be mounted:

- Close to a window, on an outside wall, or next to a door leading to the outside.
- Exposed to direct light and heat from a lamp, sun, fireplace, or other temperature-radiating object which may cause a false reading.
- Close to or in direct airflow from supply registers and return-air grilles.
- In areas with poor air circulation, such as behind a door or in an alcove.

II. SELECT MODEL AND JUMPER

AC Model (1-stage cool, 1-stage heat) is to be used for single-stage heating and/or cooling applications only. It CANNOT be used with optional outdoor temperature sensor. (See Table 1 and Fig. 2, 3, and 4.)

TABLE 1—MODEL SELECTION AND WIRING DIAGRAM CHART

OUTDOOR UNIT	AIR CONDITIONER			HEAT PUMP	
	1 Speed		2 Speed	1 Speed	2 Speed
1-Stage Furnace	Model AC See Fig. 2		Model 2S See Fig. 8	Requires Dual Fuel Thermostat	Model 2S See Fig. 11
2-Stage Furnace	Model AC See Fig. 3	Model HP See Fig. 5	Model 2S See Fig. 9	Requires Dual Fuel Thermostat	Model 2S See Fig. 12
Fan Coil	Model AC See Fig. 4	Model HP See Fig. 6	Model 2S See Fig. 10	Model HP See Fig. 7	Model 2S See Fig. 13

HP Model (1-stage cool, 2-stage heat) can be used with a single-speed heat pump (HP), or an air conditioner (AC) with a 2-stage furnace or fan coil. A resistor (R19) serves as a HP/AC selector jumper. This thermostat comes configured from the factory as a heat pump thermostat. Leave R19 installed for HP operation. Cut and discard for AC operation. When AC operation is selected, the O/W2 terminal is converted from a reversing valve output (O) to a second-stage heat output (W2). This output can be used to control 2-stage furnaces or 2-stage electric heat in fan coils. (See Table 1 and Fig. 5, 6, and 7.)

2S Model is for 2-speed compressor HP and AC systems only. Output Y1 controls compressor low speed and output Y/Y2 controls compressor high speed. Jumper resistor R19 serves as HP/AC selector exactly as described above for HP model. (See Table 1 and Fig. 8 through 13.)

→ III. INSTALL THERMOSTAT

> ⚠ **WARNING:** Before installing thermostat, turn off all power to unit. There may be more than 1 power disconnect. Electrical shock can cause personal injury or death.

1. Turn OFF all power to unit.
2. If an existing thermostat is being replaced:
   a. Remove existing thermostat from wall.
   b. Disconnect wires from existing thermostat, 1 at a time. Be careful not to allow wires to fall back into the wall.
   c. As each wire is disconnected, record wire color and terminal marking.
   d. Discard or recycle old thermostat.

NOTE: Mercury is a hazardous waste and MUST be disposed of properly.

3. Open thermostat rear door (mounting base) to expose mounting holes. The base can be removed to simplify mounting. Snap apart carefully at hinge to separate mounting base from remainder of thermostat.
4. Route thermostat wires through large hole in mounting base. Level mounting base against wall (for aesthetic value only—thermostat need not be leveled for proper operation) and mark wall through 2 mounting holes.
5. Drill two 3/16-in. mounting holes in wall where marked.
6. Secure mounting base to wall with 2 anchors and screws provided, (additional anchoring holes available for more secure mounting if needed) making sure all wires extend through hole in mounting base.
7. Adjust length and routing of each wire to reach proper terminal and connector block on mounting base with 1/4 in. of extra wire. Strip only 1/4 in. of insulation from each wire to prevent adjacent wires from shorting together when connected.
8. Match and connect equipment wires to proper terminals of the connector blocks. (See Table 1 and Fig. 2 through 13.) Both R and C must be connected for proper thermostat operation.

> ⚠ **CAUTION:** Improper wiring or installation may damage the thermostat. Check to make sure wiring is correct before proceeding with installation or turning on unit.

9. Push any excess wire into wall and against mounting base. Seal hole in wall to prevent air leaks. Leaks can affect operation.
10. Snap hinge back together.
11. Close thermostat assembly making sure pins on back of circuit board align with sockets in connector.
12. Turn ON power to unit.

On power up, LCD readout will display AC, HP, A2, or H2 depending on the thermostat model and jumper status.

IV. SET THERMOSTAT CONFIGURATION

Configuration options, like the R19 configuration jumper are intended to be selected at installation and are normally not modified by the homeowner. These options are not discussed in the Homeowner's Guide and therefore must be made as part of the installation. A special procedure allows entry into the configuration mode. The thermostat will automatically exit this mode if no button is pressed for 1 minute. While in the configuration mode, 6 option choices can be made:

1. Anticipator—Value Adjustment.
2. Zoning ON/OFF—Selection.
3. Fahrenheit/Celsius—Selection.
4. Clean Filter Timer—Selection and Value Adjustment.
5. G (Fan) ON with any W (Heat)—Selection.
6. High-Ambient Auxiliary Heat Lockout—Selection and Value Adjustment.

An explanation for each of these and how to enter the configuration mode follows.

TO ENTER THE CONFIGURATION MODE:

Press and hold the FAN button for approximately 10 sec until room temperature disappears and display reads "1-". You are now in the configuration mode.

NOTE: If the FAN button is pressed again or if no button is pressed for 60 sec, the thermostat will exit the configuration mode and return to normal operation. To re-enter the configuration mode, the FAN button must be pressed and held for 10 sec again.

WHILE IN CONFIGURATION MODE, THESE OPTION CHOICES ARE AVAILABLE:

1- ANTICIPATOR—VALUE ADJUSTMENT

This adjustment controls the sensitivity and cycle rate of the thermostat. Higher numbers decrease the sensitivity and slow the cycle rate. Lower numbers increase sensitivity and increase cycle rate. However, a limiting feature will not allow more than 4 equipment cycles per hour, regardless of setting. Values can range from 1 to 9. Factory default setting is 3. This default selection will provide optimum performance in nearly all installations. Try it first. Do not change setting unless there is evidence of need to do so.

Unlike conventional anticipators, this setting is not to be determined by current draw. There is no need to measure, know, or compensate for current. There is also no droop with this thermostat, regardless of anticipator setting. This adjustment controls only sensitivity and cycle rate up to the maximum of 4 cycles per hour.

TO ADJUST:

1. Enter configuration mode (if not already there).
2. Use up and down buttons to display 1-.
3. Press MODE button once to display current value between 01 and 09. Factory default is 03.
4. Use up and down buttons to move between values.
5. Press MODE button to return to 1-. Up and down buttons now move between option choices 1- through 6-. Or press FAN button to exit configuration mode.

2- ZONING ON/OFF—SELECTION

This selection enables or defeats the 4 cycles per hour limit and the 5 minute timeguard. These timers MUST be enabled for normal operation and disabled for zoning applications. In zoning applications, the zone control center performs these timing functions.

TO SELECT:

1. Enter configuration mode (if not already there).
2. Use up and down buttons to display 2-.
3. Press MODE button once to display current selection of ON or OF (OFF). Factory default is OFF.
4. Use up and down buttons to move between ON and OFF. Select ON for zoning applications ONLY and OFF for all other applications.
5. Press MODE button to return to 2-. Up and down buttons now move between option choices 1- through 6-. Or press FAN button to exit configuration mode.

3- FAHRENHEIT/CELSIUS—SELECTION

This selection operates the thermostat in either Fahrenheit or Celsius. Factory default is Fahrenheit.

TO SELECT:

1. Enter configuration mode (if not already there).
2. Use up and down buttons to display 3-.
3. Press MODE button once to display current selection of F or C. Factory default is F.
4. Use up and down buttons to move between F and C.
5. Press MODE button to return to 3-. Up and down buttons now move between option choices 1- through 6-. Or press FAN button to exit configuration mode.

4- CLEAN FILTER TIMER—SELECTION AND VALUE ADJUSTMENT

Select hours of blower operation (heating, cooling, or fan) before CLEAN FILTER icon is displayed. With OFF selected, icon will never come on, disabling this feature. Time selection can be from 400 to 3600 hours by selecting numbers 1 through 9. (Time is 400 X number selected.) Factory default is 2 (800 hours). Recommended selections are: disposable filter 400 to 800 hours, media filter 1200 to 1600 hours, or electronic air cleaner 1600 to 2400 hours of blower operation. With "L" selected, the icon is turned on by a 24 VAC signal applied to the thermostat "L" terminal. This allows an external sensor to indicate when the filter is dirty.

TO SELECT or ADJUST:

1. Enter configuration mode (if not already there).
2. Use up and down buttons to display 4-.
3. Press MODE button once to display current selection of OF, 1, 2, 3, 4, 5, 6, 7, 8, 9, or L. Factory default is 2.
4. Use up and down buttons to move between available choices.
5. Press MODE button to return to 4-. Up and down buttons now move between option choices 1- through 6-. Or press FAN button to exit configuration mode.

5- G (FAN) ON WITH ANY W (HEAT)—SELECTION

This selection determines whether the G (fan) output is to be ON or OFF when any W (furnace or strip heat) output is ON. Most furnaces and fan coils manage their own blowers and do not require a separate G signal. For these applications, select OFF. Some auxiliary heaters require a separate G signal to turn on the blower. In this case, select ON. Factory default is OFF.

TO SELECT:

1. Enter configuration mode (if not already there).
2. Use up and down buttons to display 5-.
3. Press MODE button once to display current selection of ON or OFF. Factory default is OFF.
4. Use up and down buttons to change between ON and OFF.
5. Press MODE button to return to 5-. Up and down buttons now move between option choices 1- through 6-. Or press FAN button to exit configuration mode.

6- HIGH-AMBIENT AUXILIARY HEAT LOCKOUT—SELECTION AND VALUE ADJUSTMENT

Present in HP and 2S models only when configured as a heat pump. Outdoor temperature sensor must be attached. This selection allows lockout of any electric heat (W output) when outdoor temperature is above a selected temperature. Temperatures of 15˚ to 55˚ F (or equivalent values in C) can be selected. Feature can be disabled by selecting OFF. Emergency heat (EHEAT mode) always overrides this feature.

TO SELECT or ADJUST:

1. Enter configuration mode (if not already there).
2. Use up and down buttons to display 6-.
3. Press MODE button once to display current selection of OF, 15, 20, 25, 30, 35, 40, 45, 50, or 55. Factory default is OFF.
4. Use up and down buttons to move between available choices.
5. Press MODE button to return to 6-. Up and down buttons now move between option choices 1- through 6-. Or press FAN button to exit configuration mode.

Thermostat configuration is now completed.

V. FAN, MODE, RESET FILTER BUTTON OPERATION

1. Pressing FAN button will select AUTO or ON fan operation. Fan annunciator displays current selection.
2. Pressing MODE button will select OFF, HEAT, COOL, AUTO. Heat pumps will also have an EHEAT mode. Mode annunciator displays current selection.
3. Pressing RESET FILTER button will reset filter timer. Annunciator will display CLEAN FILTER on LCD display after the selected number of hours of blower operation. This will remind homeowner to clean or replace filter. When the "L" terminal controls the CLEAN FILTER icon, the RESET FILTER button has no effect.

VI. CHECK THERMOSTAT OPERATION

A. Fan Operation

1. Press FAN button, starting fan operation. Fan annunciator switches from AUTO to ON.

2. Press FAN button, stopping fan operation. Fan annunciator switches from ON to AUTO.

B. Heating Operation

1. Press MODE button until HEAT is displayed under the mode annunciator.
2. Press up button until LCD readout reads 10 degrees above room temperature. Heating system should begin to operate within 5 minutes.

C. Cooling Operation

1. Press MODE button until COOL is displayed under the mode annunciator.
2. Press down button until LCD readout reads 10 degrees below room temperature. Cooling system should begin to operate within 5 minutes.

VII. CHECKLIST

1. Run equipment through several heating and cooling cycles to ensure proper operation.
2. If equipment is to be left in operation, BOTH heating and cooling desired temperature settings as well as operating mode must be properly selected. Refer to Homeowner's Guide for procedure.
3. Put away tools and instruments, and clean up debris.
4. Review Homeowner's Guide with owner.
5. Leave literature packet with owner.

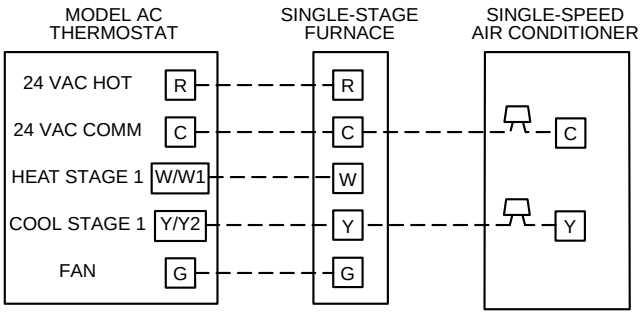

A94276

Fig. 2—Single-Speed Air Conditioner with Single-Stage Furnace

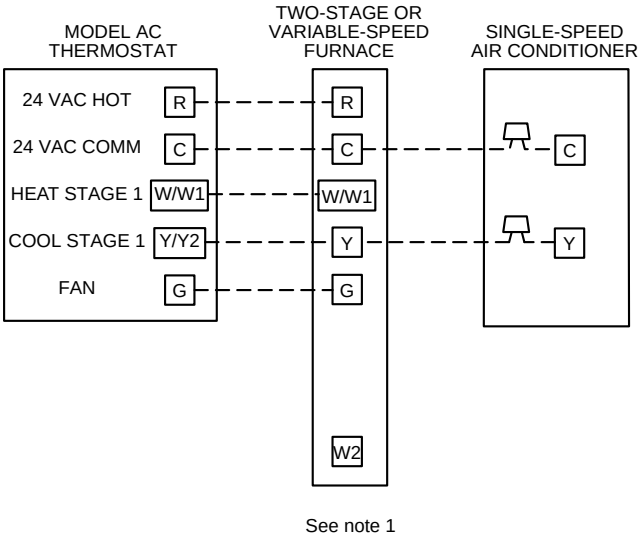

A94277

Fig. 3—Single-Speed Air Conditioner with 2-Stage or Variable-Speed Furnace

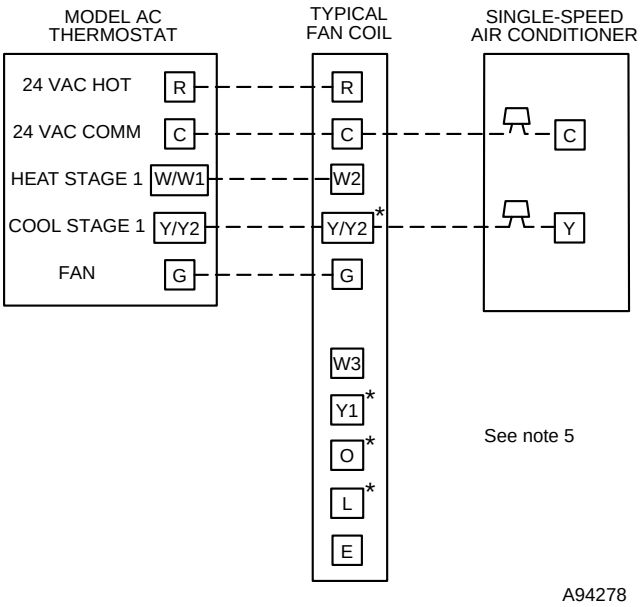

A94278

Fig. 4—Single-Speed Air Conditioner with Typical Fan Coil

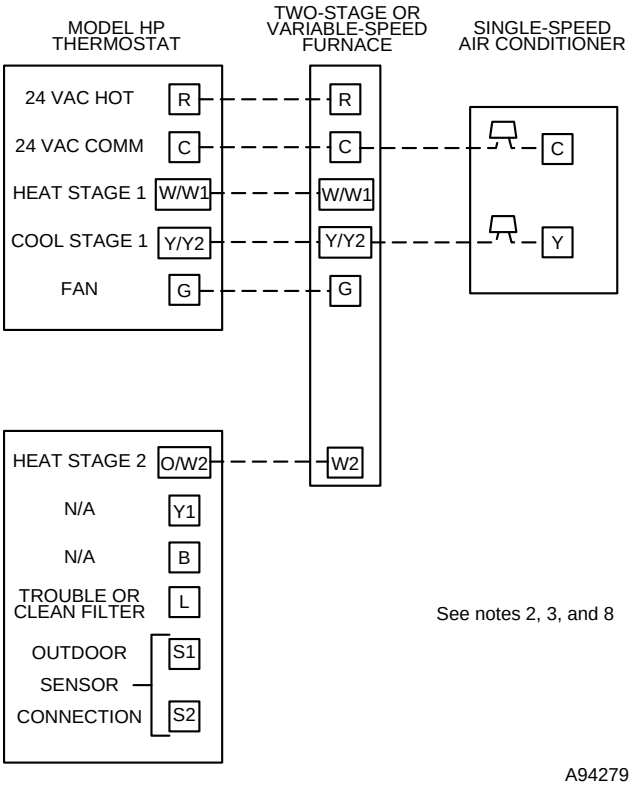

Fig. 5—Single-Speed Air Conditioner with 2-Stage or Variable-Speed Furnace

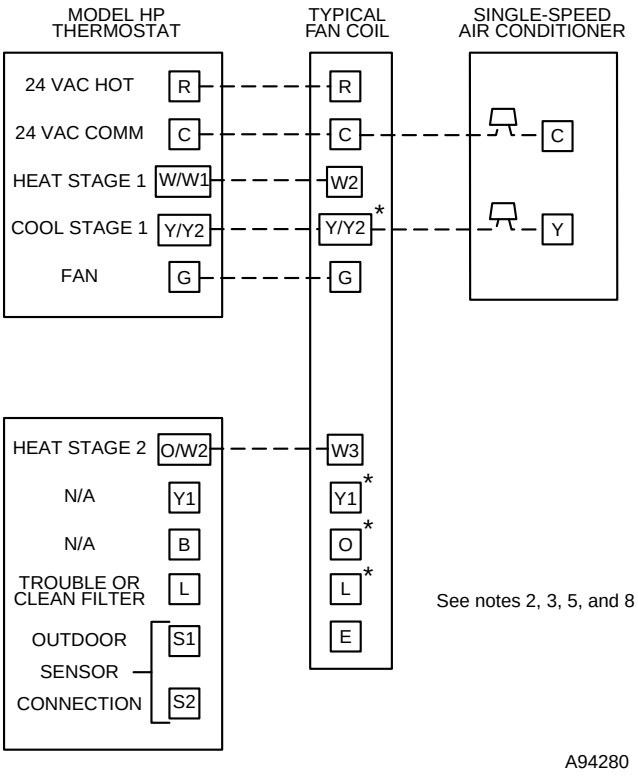

Fig. 6—Single-Speed Air Conditioner with Typical Fan Coil

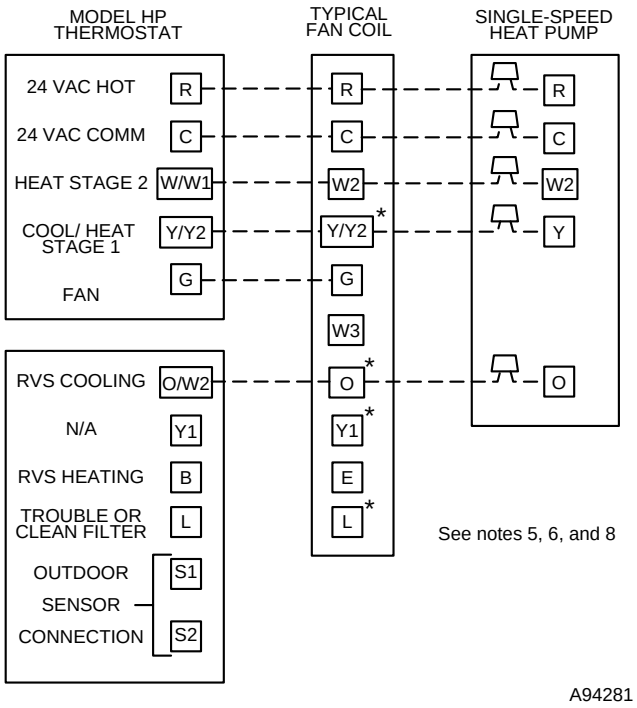

Fig. 7—Single-Speed Heat Pump with Typical Fan Coil

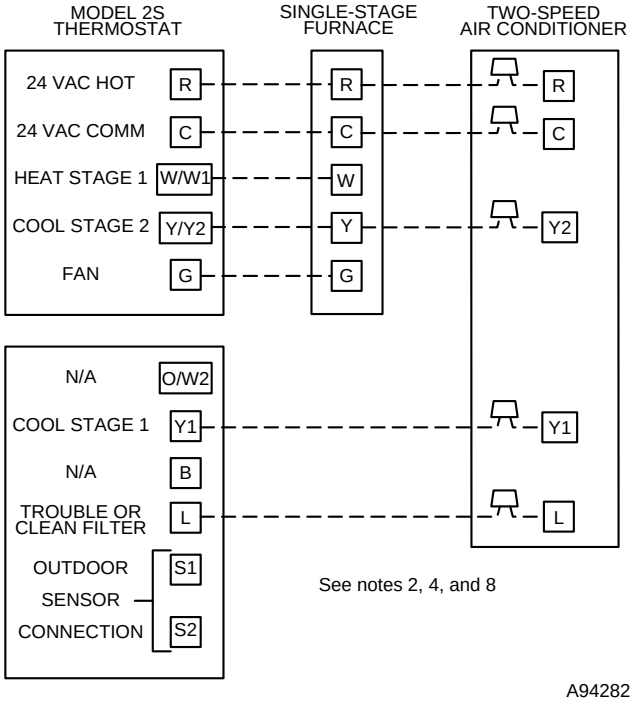

Fig. 8—Two-Speed Air Conditioner with Single-Stage Furnace

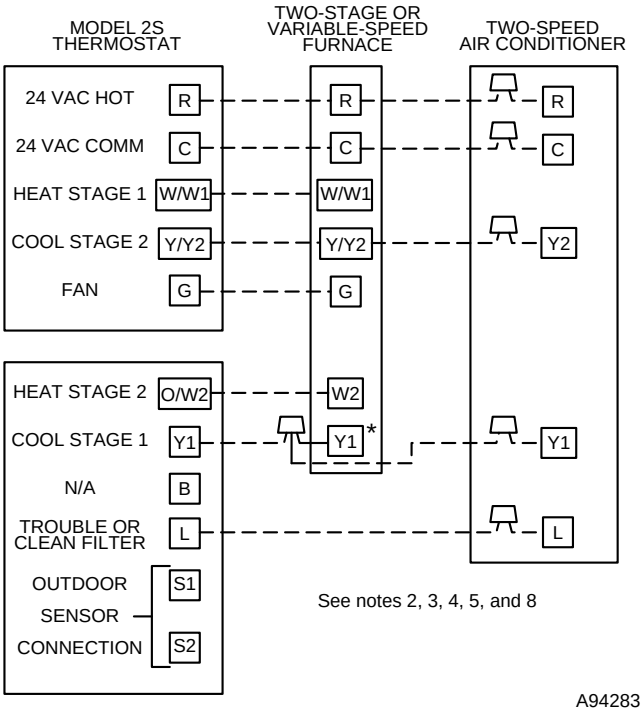

Fig. 9—Two-Speed Air Conditioner with 2-Stage or Variable-Speed Furnace

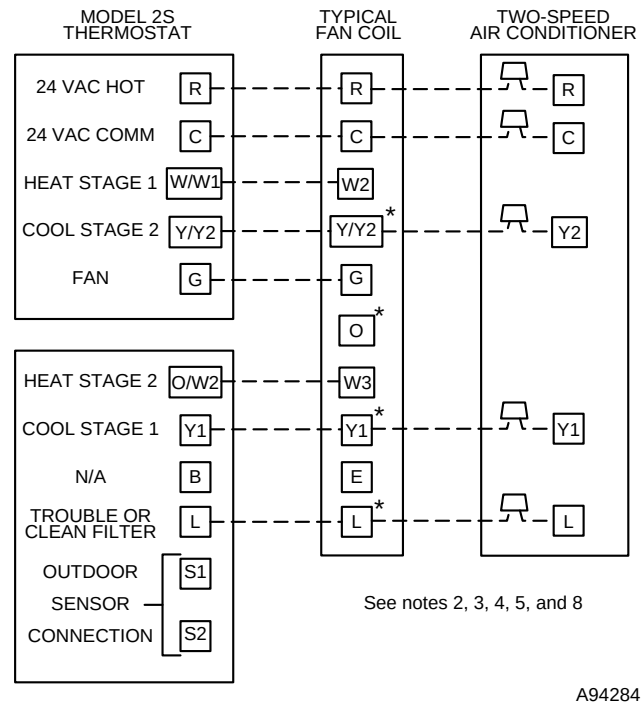

Fig. 10—Two-Speed Air Conditioner with Typical Fan Coil

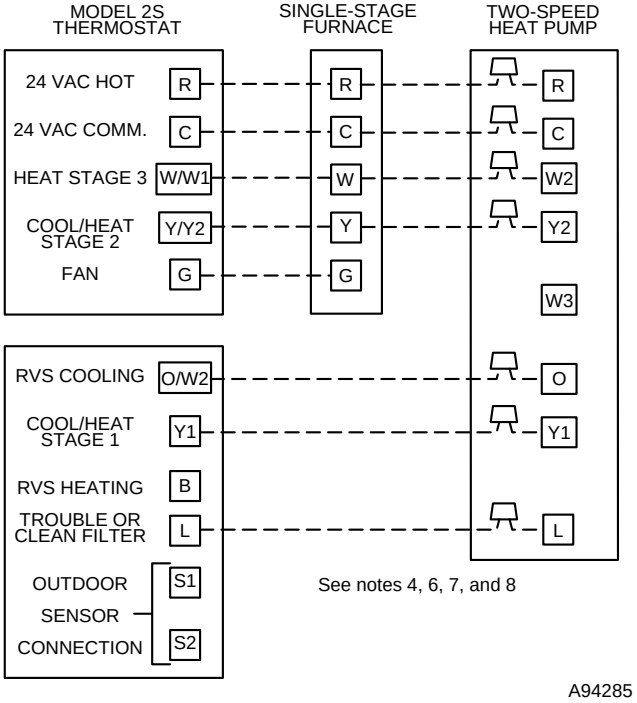

Fig. 11—Two-Speed Heat Pump with Single-Stage Furnace

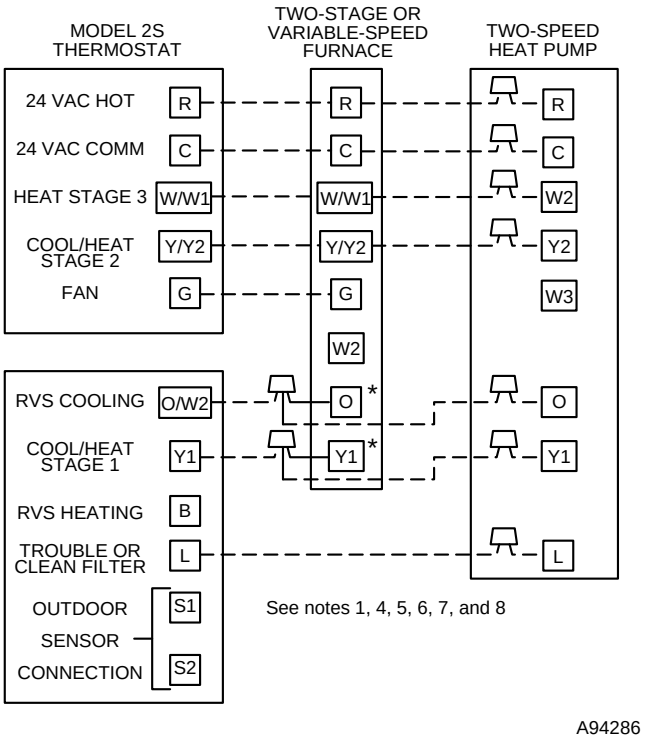

Fig. 12—Two-Speed Heat Pump with 2-Stage or Variable-Speed Furnace

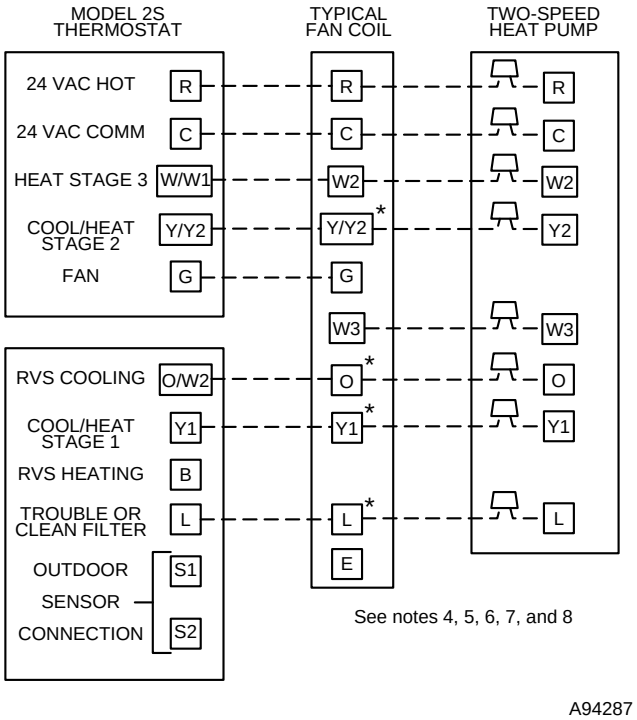

Fig. 13—Two-Speed Heat Pump with Typical Fan Coil

WIRING DIAGRAM NOTES:

1. Furnace must control second-stage heat.
2. Cut jumper R19 to convert thermostat to AC operation.
3. O/W2 can control second-stage heat. Refer to indoor equipment installation instructions for proper set up.
4. Refer to outdoor unit installation instructions for latent kit requirements.
5. Terminals marked with * may not be present on equipment.
6. O/W2 energizes reversing valve in cooling.
7. Refer to outdoor equipment installation instructions for proper set up.
8. Thermostat "L" terminal may control "trouble" or "clean filter" icons, depending on clean filter option choice.

OPERATIONAL INFORMATION

FIVE-MINUTE COMPRESSOR TIMEGUARD

This timer prevents the compressor from starting unless it has been off for at least 5 minutes. It can be defeated for 1 cycle by simultaneously pressing the FAN mode button and the INCREASE TEMPERATURE button.

FIFTEEN-MINUTE CYCLE TIMER

This timer prevents the start of a heating or cooling cycle until at least 15 minutes after the last start of the same cycle. Its function is to assure that equipment is not cycled more than 4 times per hour. This timer is defeated for 1 cycle when the desired temperature is manually changed. It can also be defeated for 1 cycle by simultaneously pressing the FAN mode button and the INCREASE TEMPERATURE button.

FIFTEEN-MINUTE STAGING TIMER

In multistage heating or cooling, this timer prevents any higher stage from turning on until the preceding stage has been on for 15 minutes. This timer is defeated if the temperature error is greater than 5 degrees (usually due to a large change in desired temperature).

TWO-MINUTE MINIMUM ON TIME

In normal operation, when a stage turns on, it will not turn off for a minimum of 2 minutes.

HEAT/COOL SETPOINTS (DESIRED TEMPERATURES)

A minimum difference of 3 degrees is enforced between heating and cooling desired temperatures. This is done by allowing one setting to "push" the other, to maintain this difference.

AUTO CHANGEOVER

When the auto changeover mode is selected, a change from heat to cool (or vice versa) will not occur until an opposite mode demand has existed for 20 minutes. If the desired temperature is changed, the 20 minute requirement is deleted.

EMERGENCY HEAT MODE

When thermostat is configured as a heat pump and emergency heat mode is selected, all Y signals are locked out and W becomes energized upon a call for heat.

POWER ON CHECK

When AC power is first applied, all segments of the display are turned on for a few seconds. Following this, the temperature display indicates the model/configuration via the following 2 digit code:
AC—1-speed air conditioner, HP—1-speed heat pump, A2—2-speed air conditioner, H2—2-speed heat pump.

ERROR CODES

E1 - If the thermostat cannot properly read room temperature, the display will indicate E1 and all outputs (except the fan if on) will turn off. This is to prevent operation of the equipment if the thermostat has failed.

E2 - If the AC line voltage drops below a minimum (brownout) level, all outputs are turned off and the display indicates E2. This condition will remain for 15 seconds after proper line voltage is restored. If the AC line voltage disappears completely, the display will immediately go blank.

ENERGY SAVINGS ICON

This icon is displayed under these conditions:
1-speed HP heating without auxiliary heat.
2-speed HP on LO or HI speed heating without auxiliary heat.
2-speed HP or AC on LO speed cooling.

THERMOSTAT TROUBLESHOOTING

SYMPTOM	WHAT TO CHECK
No LCD on temperature display	Check for 24 VAC between R and C at terminal connections. Both R and C must be connected for proper operation.
″E2″ on temperature display	Brownout condition or too low of voltage to thermostat. Double check wiring and check for 24 VAC between R and C. E2 will clear 15 seconds after proper voltage is restored.
″E1″ on temperature display	Temperature sensor reading out of range. Check sensor for damage. If recycling power does not clear display, thermostat should be replaced.
″Clean Filter″ on temperature display	After the selected number of hours of blower operation ″clean filter″ will display on LCD. This is to remind the homeowner to ″check″ filter. Press ″reset filter″ button to clear display and reset timer to 0. If ″L″ has been selected for the clean filter option, 24 VAC on the ″L″ terminal will cause ″clean filter″ to be displayed.
″Trouble″ on temperature display	This will indicate a problem with system equipment. 24 VAC is present on the ″L″ terminal connection and ″L″ has not been selected for the clean filter option.
″--″ on temperature display	If the outdoor sensor is open, not connected, or shorted ″--″ will be displayed in place of outdoor temperature.
Cooling will not come on	Select COOL mode. Set desired temperature to 10 degrees below room temperature. Simultaneously press FAN and INCREASE TEMPERATURE buttons to defeat timers. Check for 24 VAC at Y/Y2 terminal. If present, thermostat is OK and problem is with equipment or wiring. If not present, replace thermostat.
Heating will not come on	Select HEAT mode. Set desired temperature to 10 degrees above room temperature. Simultaneously press FAN and INCREASE TEMPERATURE buttons to defeat timers. Check for 24 VAC at Y/Y2 (with heat pump) or W/W1 (with air conditioner) terminal. If present, thermostat is OK and problem is with equipment or wiring. If not present, replace thermostat.