577E--K Series K Ultra Low NOx Preferred™ 15.2 SEER2 2-Stage Packaged Air Conditioner and Single Stage Gas Furnace System with Puron® (R-410A) Refrigerant Single and Three Phase 2 to 5 Nominal Tons (Sizes 24-60)

Product Data

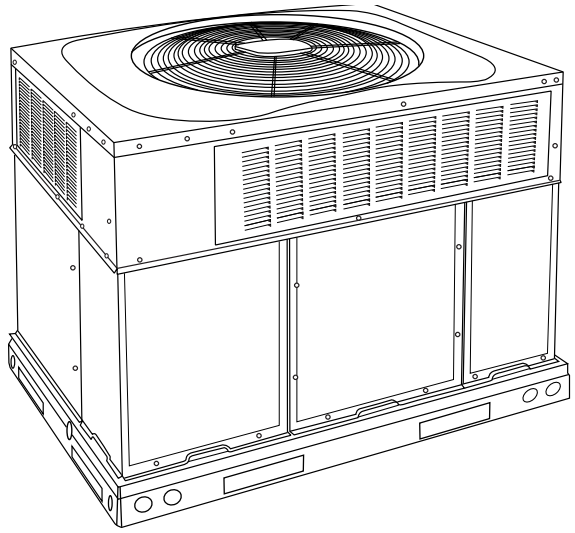

A09033

Fig. 1 – Unit 577E

Single-Packaged Products with Energy-Saving Features and Puron® (R-410A) refrigerant.

- Up to 16.0 SEER2
- 11.5 EER2
- 81% AFUE (Single and three phase models)
- Meets Energy Star requirements
- Direct Spark Ignition
- Factory-Installed TXV
- Multi-speed ECM Blower Motor-Standard
- Sound Levels as low as 70dBA
- Two Stage Cooling
- Dehumidification Feature

Features/Benefits

One-piece heating and cooling units with low sound levels, easy installation, low maintenance, and dependable performance.

Puron Refrigerant is Bryant's unique refrigerant designed to help protect the environment. Puron is an HFC refrigerant which does not contain chlorine that can harm the ozone layer. Puron refrigerant is in service in millions of systems proving highly reliable, environmentally sound performance.

Easy Installation

Factory-assembled package is a compact, fully self-contained, combination gas heating/electric cooling unit that is prewired, pre-piped, and pre-charged for minimum installation expense. These units are available in a variety of standard and optional heating/cooling size combinations with voltage options to meet residential and light commercial requirements. Units are lightweight and install easily on a rooftop or at ground level. The high tech composite base eliminates rust problems associated with ground level applications.

Innovative Unit Base Design

On the inside a high-tech composite material will not rust and incorporates a sloped drain pan which improves drainage and helps inhibit mold, algae and bacterial growth. On the outside metal base rails provide added stability as well as easier handling and rigging.

Convertible Duct Configuration

Unit is designed for use in either downflow or horizontal applications. Each unit is converted from horizontal to downflow and includes two horizontal duct covers. Downflow operation is provided in the field to allow vertical ductwork connections. The basepan seals on the bottom openings to ensure a positive seal in the vertical airflow mode.

Efficient Operation

High-efficiency Design offers SEER (Seasonal Energy Efficiency Ratios2) of up to 16.0 11.5 EER2, and AFUE (Annual Fuel Utilization Efficiency) ratings as high as 81%.

Energy-saving, Direct Spark Ignition saves gas by operating only when the room thermostat calls for heating. Standard units are furnished with natural gas controls.

Ultra Low NOx units meet South Coast Air Quality Management District (SCAQMD) and San Joaquin Air Pollution Control District (SJAPCD) are regulating a reduction of 65%, down to no more than 14ng/J of NOx emissions.

Durable, dependable components

Compressors have two stages of cooling and are designed for high efficiency. Each compressor is hermetically sealed against contamination to help promote longer life and dependable operation. Each compressor also has vibration isolation to provide quieter operation. All compressors have internal high pressure and overcurrent protection.

Turbo-tubular™ Heat Exchangers are constructed of stainless steel for corrosion resistance and optimum heat transfer for improved efficiency. The tubular design permits hot gases to make multiple passes across the path of the supply air.

In addition, dimples located on the heat exchanger walls force the hot gases to stay in close contact with the walls, improving heat transfer.

Multi-speed ECM Blower Motor is standard on all models.

Direct-drive PSC (Permanent Split Capacitor) condenser-fan motors are designed to help reduce energy consumption and provide for cooing operation down to 40°F (4.4°C) outdoor temperature. Motormaster® II low ambient kit is available as a field-installed accessory.

Thermostatic Expansion Valve - A hard shutoff, balance port TXV maintains a constant superheat at the evaporator exit (cooling cycle) resulting in higher overall system efficiency.

Refrigerant System is designed to provide dependability. Liquid filter driers are used to promote clean, unrestricted operation. Each unit leaves the factory with a full refrigerant charge. Refrigerant service connections make checking operating pressures easier.

High and Low Pressure Switches provide added reliability for the compressor.

Indoor and Outdoor Coils are computer-designed for optimum heat transfer and efficiency. The indoor coil is fabricated from tin-plated copper tube and aluminum fins and is located inside the unit for protection against damage. The outdoor coil is internally mounted on the top tier of the unit.

Low Sound Ratings ensure a quiet indoor and outdoor environment with sound ratings as low as 70dBA.

Dehumidification Feature

This unit has independent fan speeds for low stage cooling and high stage cooling. In addition, 208/230 VAC models have the field-selectable capability to run enhanced dehumidification ('DHUM') speed on each stage cooling (as low as 320CFM per ton). The dehumidification control must open the control circuit on humidity rise above the dehumidification set point.

Heating

- Reliable direct spark ignition system
- Inducer motors with ball bearings

Easy to Service Cabinets provide easy 3-panel accessibility to serviceable components during maintenance and installation. The basepan with integrated drain pan provides easy ground level installation with mounting pad. A nesting feature ensures a positive basepan to roof curb seal when the unit is roof mounted. A convenient 3/4-in. (19.05 mm) wide perimeter flange makes frame mounting on a rooftop easy.

Standard Horizontal Metal Duct Covers with insulation come with the unit and cover the horizontal duct openings. These can be left in place if the units are converted to downflow.

Integrated Gas Control (IGC) Board provides safe and efficient control of heating and simplifies trouble-shooting through its built-in diagnostic function.

Cabinets are constructed of heavyduty, phosphated, zinc-coated prepainted steel capable of withstanding 500 hours in salt spray. Interior surfaces of the evaporator/heat exchanger compartment are insulated with foil-faced insulation, which keeps the conditioned air from being affected by the outdoor ambient temperature and provides improved indoor air quality. (Conforms to American Society of Heating, Refrigeration and Air Conditioning Engineers 62.2.) The sloped drain pan minimizes standing water in the drain. An external drain is provided.

Louvered grille provides hail and vandalism protection for the coil.

Table of Contents

Features/Benefits 1
- Efficient Operation. 1
- Durable, dependable components 1
- Cooling Capacities and Efficiencies 3

Heating Capacities and Efficiencies 4
- Gas Heating Capacities and Efficiencies, Single and Three Phase Models 4
- A-Weighted Sound Power Level (dBA) 4
- Physical Data 5
- 024 Low Cool 11
- 036 Low Cool 12
- 048 Low Cool 13
- 060 Low Cool 14

Gas Adjustment 16
- Natural Gas Orifice Sizes and Manifold Pressure 16
- Single and Three Phase Models. 16
- High Altitude Compensation, Natural Gas - Single and Three Phase Models 16
- Dry Coil Air Delivery** - Horizontal and Downflow Discharge Sizes 24-60 208/230 VAC - 1,3 Phase 17
- Wet Coil Pressure Drop (IN. W.C.). 25
- Economizer with 1-in. Filter Pressure Drop (IN. W.C.) 25
- Filter Pressure Drop Table (IN. W.C.). 25

Guide Specifications. 33

Model Number Nomenclature

577E N W K 24 000 U A

Type of Unit
577E - Two-Stage Packaged Air Conditioner and Single Stage Gas Furnace System

Electrical Supply
N - 208/230-1-60
P - 208/230-3-60

Variations

Major Series

Nominal Cooling Capacity
24 - 2.0 Tons
36 - 3.0 Tons
48 - 4.0 Tons
60 - 5.0 Tons

Minor Series

Brand Name
U - Ultra Low NOx

Heat Input Size (Btuh)
040 - 45,000
060 - 60,000
090 - 89,000

ASHRAE 90.1 COMPLIANT

GAS-FIRED C UL US LISTED

C UL US LISTED

AHRI CERTIFIED www.ahridirectory.org
Use of the AHRI Certified TM Mark indicates a manufacturer's participation in the program For verification of certification for individual products, go to www.ahridirectory.org.

energy ENERGY STAR

For California Residents:
For installation in SCAQMD only: The Ultra Low NOx furnace does meet the SCAQMD Rule 1111 14ng/J NOx emission limit.

AHRI* Capacities

Cooling Capacities and Efficiencies

Unit Size	Nominal Tons	Standard CFM (High / Low Stage)	Net Cooling Capacities - Btuh (High Stage)	EER2 @A**	SEER2†
24	2	800 / 600	22200	11.5	15.2
36	3	1200 / 900	34800	11.5	15.2
48	4	1600 / 1200	46500	11.8	16.0
60	5	1750 / 1200	56000	11.5	15.2

LEGEND
dB-Sound Levels (decibels)
db—Dry Bulb
SEER—Seasonal Energy Efficiency Ratio
wb—Wet Bulb
COP-Coefficient of Performance
* Air Conditioning, Heating & Refrigeration Institute.
**At "A" conditions-80°F (26.7°C) indoor db/67°F (19.4°C) indoor wb & 95°F (35°C) outdoor db.
† Rated in accordance with U.S. Government DOE Department of Energy) test procedures and/or AHRI Standards 210/240.
Notes:
1. Ratings are net values, reflecting the effects of circulating fan heat.
Ratings are based on:
Cooling Standard: 80°F (26.7°) db, 67°F wb (19.4°C) indoor entering-air temperature and 95°F db (35°C) outdoor entering-air temperature.
2. Before purchasing this appliance, read important energy cost and efficiency information available from AHRIdirectory.org.

Heating Capacities and Efficiencies

Gas Heating Capacities and Efficiencies, Single and Three Phase Models

Unit Size	Heating Input (Btuh)	Output Capacity (Btuh)	Temperature Rise Range °F (°C)	AFUE (%)
24040	45,000	37,000	25-55 (14-31)	81.0
24060 36060	60,000	49,000	25-55 (14-31)	81.0
48090 60090	89,000	73,000	35-65 (19-36)	81.0

LEGEND
AFUE - Annual Fuel Utilization Efficiency
NOTE: Before purchasing this appliance, read important energy cost and efficiency information available from AHRIdirectory.org.
LEGEND

A-Weighted Sound Power Level (dBA)

Unit Size	Sound Ratings (dBA)	Typical Octave Band Spectrum (dBA without tone adjustment)						
		125	250	500	1000	2000	4000	8000
24	70	54.9	58.1	57.9	60.1	55.3	54.5	47.4
36	73	62.5	65.5	67.5	68.0	65.5	60.0	52.5
48	72	60.0	63.5	66.0	67.0	63.5	58.5	49.5
60	75	69.0	67.0	69.0	68.0	65.0	61.5	54.0

NOTE: Tested in compliance with AHRI 270 but not listed with AHRI.

Physical Data

UNIT SIZE	24040	24060	36060	48090	60090
NOMINAL CAPACITY (ton)	2	2	3	4	5
SHIPPING WEIGHT lb.	352	352	455	500	520
SHIPPING WEIGHT (kg)	160	160	206	227	236
COMPRESSORS	Scroll I				
Quantity	1				
REFRIGERANT (R-410A)					
Quantity lb.	7.05	7.05	8.1	10.8	12.1
Quantity (kg)	3.2	3.2	3.7	4.9	5.5
REFRIGERANT METERING DEVICE	TXV				
OUTDOOR COIL					
Rows...Fins/in.	1..21	1...21	2...21	2...21	2...21
Face Area (sq ft)	13.6	13.6	13.6	19.4	21.4
OUTDOOR FAN					
Nominal CFM	2500	2500	3000	3300	3600
Diameter in.	24	24	26	26	26
Diameter (mm)	609.6	609.6	600.4	660.4	660.4
Motor Hp (Rpm)	1/12 (810)	1/12 (810)	1/5 (810)	1/5 (810)	1/5 (810)
INDOOR COIL					
Rows...Fins/in.	3...17	3...17	3...17	3...17	3...17
Face Area (sq ft)	3.7	3.7	4.7	5.7	5.7
INDOOR BLOWER					
Nominal Low Stage Cooling Airflow (Cfm)	600	600	900	1200	1200
Nominal High Stage Cooling Airflow (Cfm)	800	800	1200	1600	1750
Size in.	10x10	10x10	11x10	11x10	11x10
Size (mm.)	254x254	254x254	279.4x254	279.4x254	279.4x254
Motor HP (RPM)	1/2 (1050)	1/2 (1050)	3/4 (1000)	1.0 (1075)	1.0 (1075)
FURNACE SECTION*					
Burner Orifice No. (Qty...Drill Size) Natural Gas (Factory Installed)	1...0.125	1...#28	1...#28	1...#18	1...#18
HIGH-PRESSURE SWITCH	650 +/- 15				
(psig) Cut-out Reset (Auto)	420 +/- 25				
LOSS-OF-CHARGE / LOW-PRESSURE SWITCH (Liquid Line)	50 +/- 7				
(psig) cut-out Reset (auto)	95 +/- 7				
RETURN-AIR FILTERS† ‡					
Throwaway Size in.	20x20x1	20x24x1	24x30x1	24x36x1	
(mm)	508x508x25	508x610x25	610x762x25	610x914x25	

*. Based on altitude of 0 to 2000 ft (0-610 m).
†. Required filter sizes shown are based on the larger of the AHRI (Air Conditioning Heating and Refrigeration Institute) rated cooling airflow or the heating airflow velocity of 300 ft/minute for throwaway type. Air filter pressure drop for non-standard filters must not exceed 0.08 IN. W.C.
‡. If using accessory filter rack refer to the filter rack installation instructions for correct filter sizes and quantity.

Manufacturer reserves the right to change, at any time, specifications and designs without notice and without obligations.

Options and Accessories

Item	Description	Factory Installed Option	Field Installed Accessory
Compressor Start Kit	Compressor Start Kit assists compressor start-up by providing additional starting torque on sing phase units only.		X
Corporate Thermostats	Thermostats provide control for the system heating and cooling functions.		X
Crankcase Heater	Crankcase Heater provides anti-floodback protection for low-load cooling applications.		X* †
Economizer	Vertical Economizer with Jade Honeywell W7220 Controller, Honeywell communicating actuator, and dry bulb sensor. (Contact MicroMetl Customer Service at 1-800-662-4822 to order.)		X
	Horizontal Economizer with Jade Honeywell W7220 Controller, Honeywell communicating actuator, and dry bulb sensor. (Contact MicroMetl Customer Service at 1-800-662-4822 to order.)		X
Filter Rack	Filter Rack features easy installation, serviceability, and high-filtering performance for vertical applications. Includes 1-in. filter.		X
Flat Roof Curb	14-in. (356 mm) Flat Roof Curb is available for roof mounted applications.		X
Flue Discharge Deflector	Directs flue gas exhaust 90 degrees upward from current discharge.		X
Low Ambient Kit	Low Ambient Kit (Motormaster II Control) allows the use of mechanical cooling down to outdoor temperatures as low as 0°F (-18°C) when properly installed.		X
Manual Outside Air Damper	Manual Outside Air Damper includes hood and filter rack with adjustable damper blade for up to 25% outdoor air.		X
Square-to-Round Duct Transition Kit	Square-to-Round Duct Transition Kit enable 24-48 size units to be fitted to 14 in. (356 mm) round ductwork.		X
Time Guard II	Automatically prevents the compressor from restarting for at least 4 minutes and 45 seconds after shutdown of the compressor. Not required when a corporate programmable thermostat is applied or with a RTU-MP control.		X

*. Refer to Price Page for application detail.
†. Standard on 3-phase.

Unit Dimensions - 24

COOLING CAPACITY	UNIT WT.		UNIT HEIGHT IN/MM		CENTER OF GRAVITY IN/MM		
	LB	KG	"A"		X	Y	Z
24	344	156.1	45-3/4	1121	22-13/16	579.4	15-5/16	388.9	15-13/16	401.6

UNIT	CORNER WEIGHT LB/KG					
	"1"		"2"		"3"	"4"
24	87.9	39.9	77.6	35.2	84.1	38.2	94.4	42.8

NOTE: 1. ALL TABLE DATA RELEVANT FOR ALL FACTORY INSTALLED OPTIONS EXCEPT ECONOMIZER.
2. * - INDICATES ALL FIOP CODES FOR THE MODELS LISTED.

REQUIRED CLEARANCES TO COMBUSTIBLE MATL.

	INCHES [MM]
TOP OF UNIT	14 [355.6]
DUCT SIDE OF UNIT	2 [50.8]
SIDE OPPOSITE DUCTS	14 [355.6]
BOTTOM OF UNIT	1/2 [12.7]
FLUE PANEL	36 [914.4]

NEC. REQUIRED CLEARANCES.

	INCHES [MM]
BETWEEN UNITS, POWER ENTRY SIDE	42 [1066.8]
UNIT AND UNGROUNDED SURFACES, POWER ENTRY SIDE	36[914.0]
UNIT AND BLOCK OR CONCRETE WALLS AND OTHER GROUNDED SURFACES, POWER ENTRY SIDE	42 [1066.8]

REQUIRED CLEARANCE FOR OPERATION AND SERVICING

	INCHES [MM]
EVAP. COIL ACCESS SIDE	36 [914.0]
POWER ENTRY SIDE (EXCEPT FOR NEC REQUIREMENTS)	42 [1066.8]
UNIT TOP	48 [1219.2]
SIDE OPPOSITE DUCTS	36 [914.0]
DUCT PANEL	12 [304.8]*

*MINIMUM DISTANCES:IF UNIT IS PLACED LESS THAN 12 [304.8] FROM WALL SYSTEM,THEN SYSTEM PERFORMANCE MAYBE COMPROMISED.

DIMENSIONS IN [] ARE IN MM

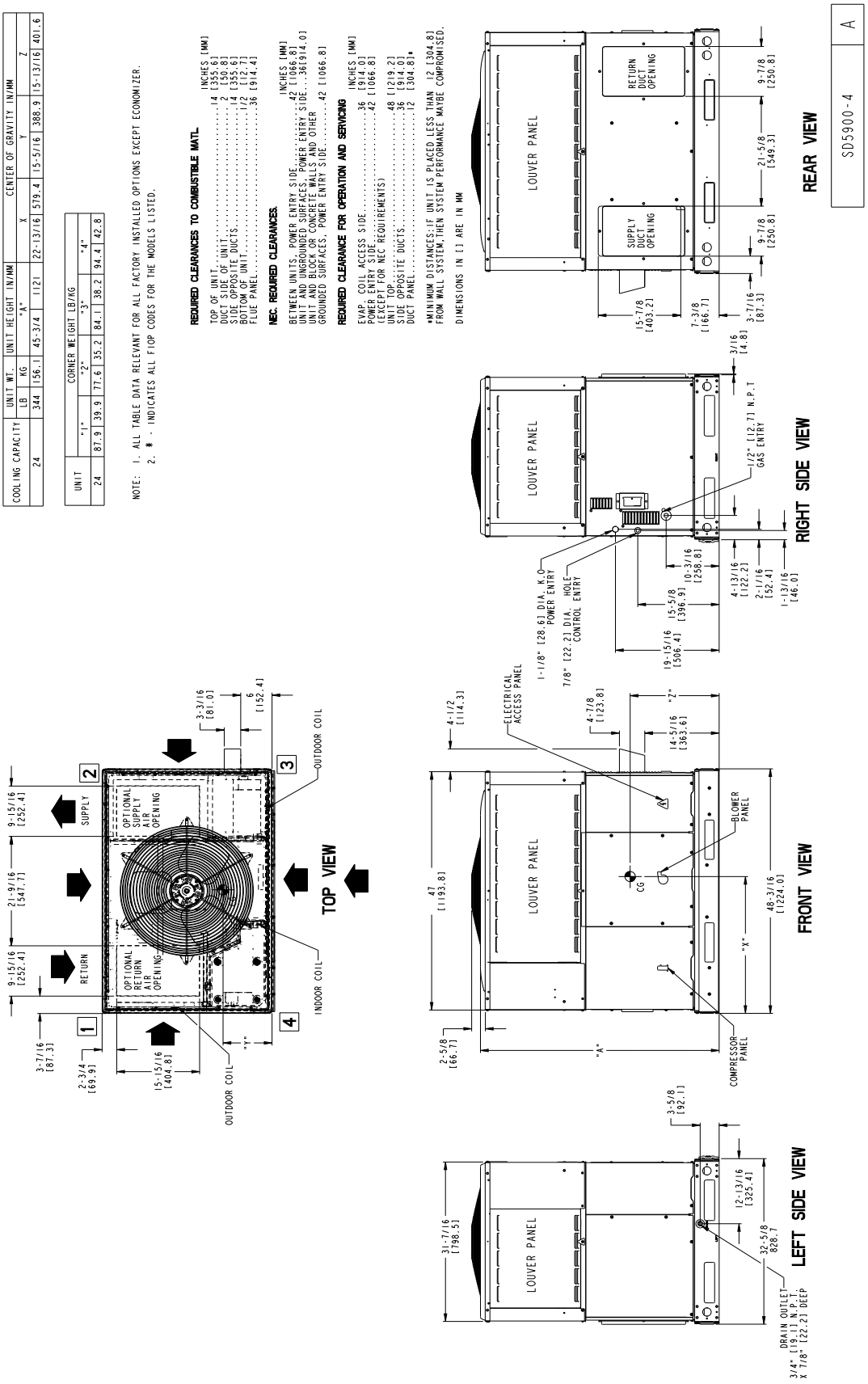

A230027

Unit Dimensions - 36-60

COOLING CAPACITY	UNIT WT.		UNIT HEIGHT IN/MM	CENTER OF GRAVITY IN/MM		
	LB	KG	"A"	X	Y	Z
36	447	202.8	44-3/4 1137	22-13/16 579.4	18 457.2	17-1/8 435.0
48	492	223.2	50-3/4 1289	22-13/16 579.4	18 457.2	17-3/8 441.3
60	512	232.2	52-3/4 1340	22-13/16 579.4	18 457.2	17-5/8 447.7

UNIT	CORNER WEIGHT LB/KG							
	"1"		"2"		"3"		"4"	
36	97.5	44.3	86.4	39.2	123.9	56.2	140.2	63.6
48	107.0	48.5	95.3	43.2	136.1	61.8	153.6	69.7
60	110.9	50.3	98.6	44.7	142.2	64.5	160.2	72.7

NOTE: 1. ALL TABLE DATA RELEVANT FOR ALL FACTORY INSTALLED OPTIONS EXCEPT ECONOMIZER.
2. * - INDICATES ALL FIOP CODES FOR THE MODELS LISTED.

REQUIRED CLEARANCES TO COMBUSTIBLE MATL.

	INCHES [MM]
TOP OF UNIT	14 [355.6]
DUCT SIDE OF UNIT	2 [50.8]
SIDE OPPOSITE DUCTS	14 [355.6]
BOTTOM OF UNIT	12 [12.7]
FLUE PANEL	36 [914.4]

NEC. REQUIRED CLEARANCES.

	INCHES [MM]
BETWEEN UNITS, POWER ENTRY SIDE	42 [1066.8]
UNIT AND UNGROUNDED SURFACES, POWER ENTRY SIDE	36[914.0]
UNIT AND UNGROUNDED SURFACES, WALLS AND OTHER GROUNDED SURFACES, POWER ENTRY SIDE	42 [1066.8]

REQUIRED CLEARANCE FOR OPERATION AND SERVICING

	INCHES [MM]
EVAP. COIL ACCESS SIDE	36 [914.0]
POWER ENTRY SIDE	42 [1066.8]
(EXCEPT FOR NEC REQUIREMENTS)	
UNIT TOP	48 [1219.2]
SIDE OPPOSITE DUCTS	36 [914.0]
DUCT PANEL	12 [304.8]*

*MINIMUM DISTANCES:IF UNIT IS PLACED LESS THAN 12 [304.8] FROM WALL SYSTEM,THEN SYSTEM PERFORMANCE MAYBE COMPROMISED.

DIMENSIONS IN [] ARE IN MM

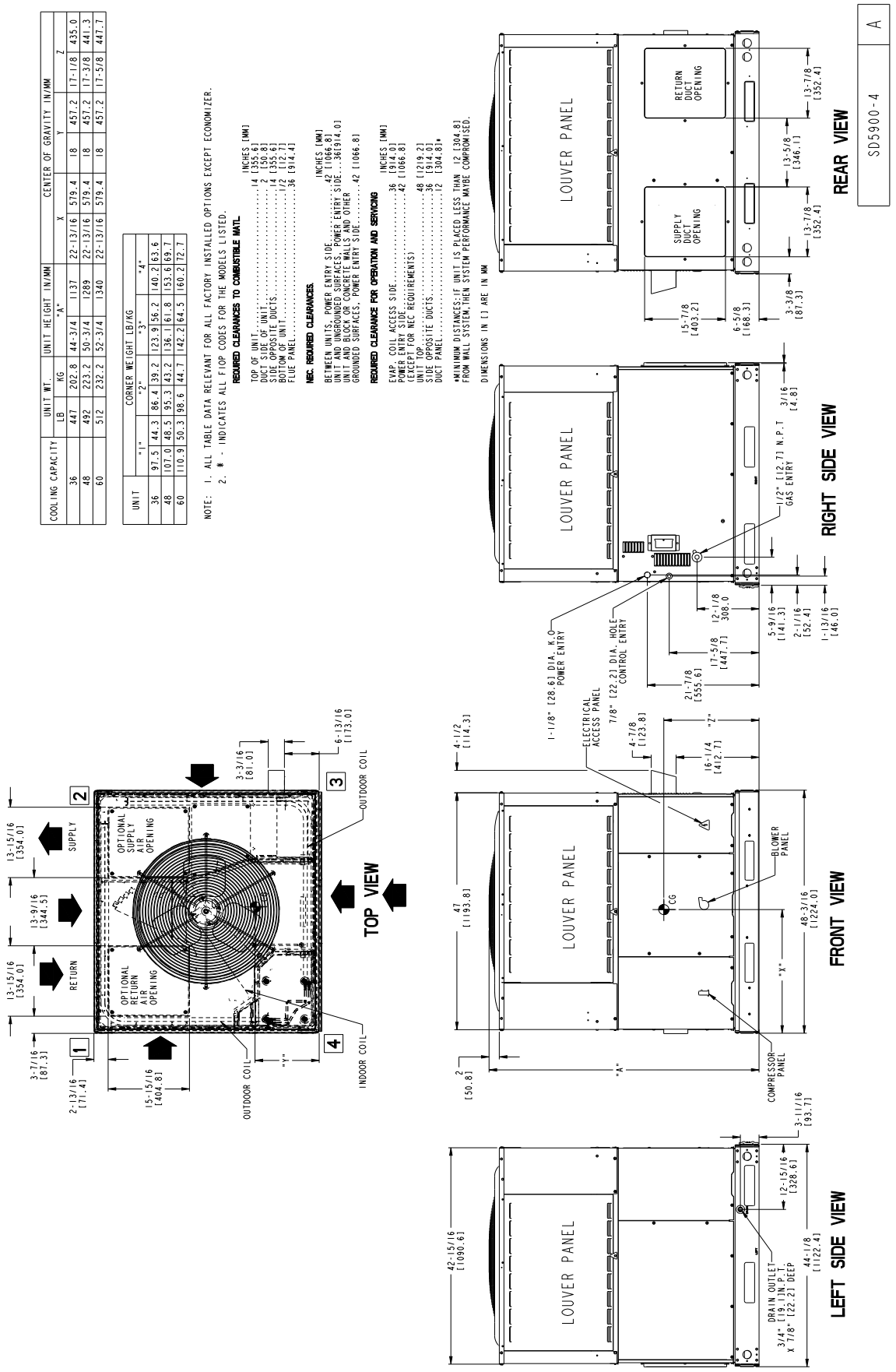

A230028

Accessory Dimensions

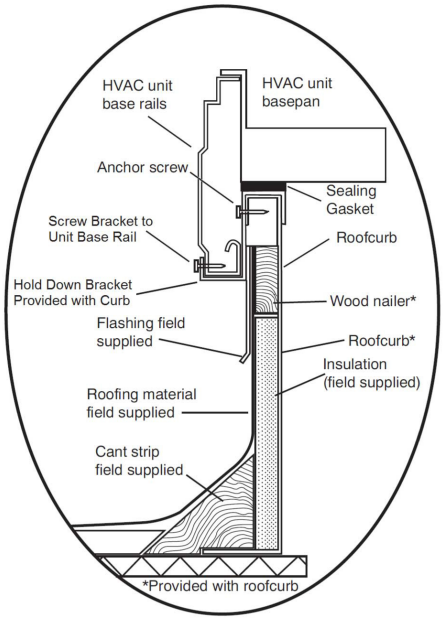

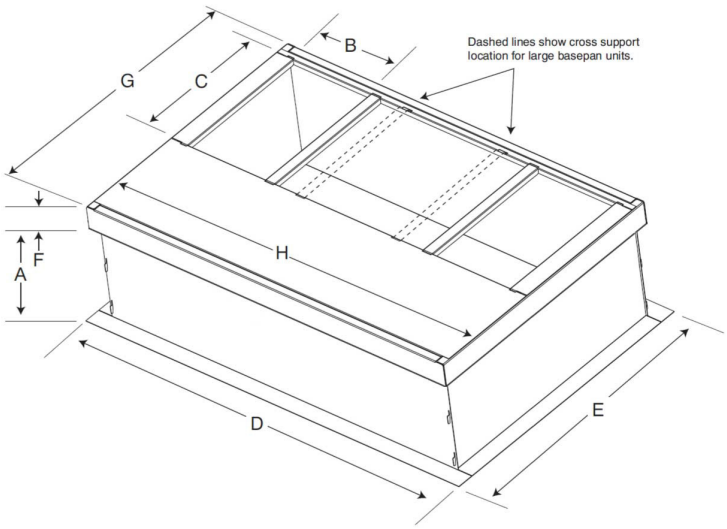

SMALL/COMMON CURB

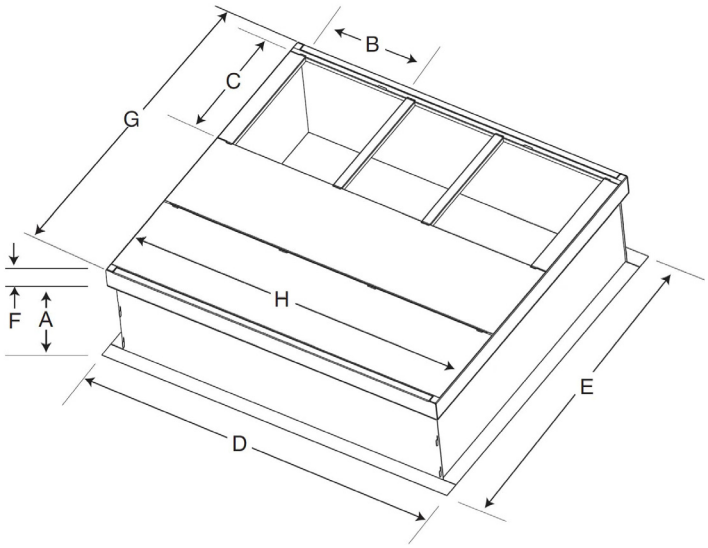

LARGE CURB

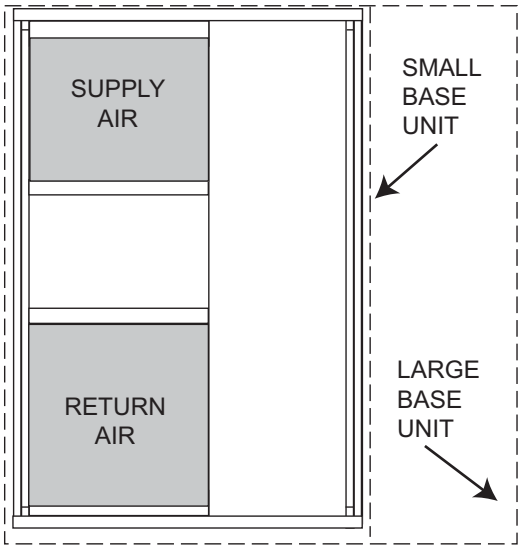

UNIT PLACEMENT ON COMMON CURB

SMALL OR LARGE BASE UNIT

A180216

Unit Size	Catalog Number	A in. (mm)	B (small / common base) in. (mm)*	B (large base) in. (mm)*	C in. (mm)	D in. (mm)	E in. (mm)	F in. (mm)	G in. (mm)	H in. (mm)
Small or Large	CPRFCURB011B00	14 (356)	10 (254)	14 (356)	16 (406)	47.8 (1214)	32.4 (822)	2.7 (69)	30.6 (778)	46.1 (1170)
Large	CPRFCURB013B00	14 (356)	14 (356)				43.9 (1116)		42.2 (1072)	

* Part Number CPRCURB011B00 can be used on both small and large basepan units. The cross supports must be located based on whether the unit is a small basepan or a large basepan.

NOTES:

1. Roof curb must be set up for unit being installed.
2. Seal strip must be applied, as required, to unit being installed.
3. Roof curb is made of 16-gauge steel.
4. Attach ductwork to curb (flanges of duct rest on curb).
5. Insulated panels: 1-in. (25.4 mm) thick fiberglass 1 lb. density.

Manufacturer reserves the right to change, at any time, specifications and designs without notice and without obligations.

Selection Procedure (with example)

1. Determine cooling and heating requirements at design conditions:

Given:

Required Cooling Capacity (TC) 34,000Btuh
Sensible Heat Capacity (SHC) . . . . . 25,000 Btuh
Required Heating Capacity. . . . . 45,000 Btuh
Condenser Entering Air Temperature . . . . . 95°F (35°C)
Indoor-Air Temperature . . . . . .80°F (26°C)edb 67°F (19°C)ewb
Evaporator Air Quantity . . . . . 1200 CFM
External Static Pressure . . . . . 0.100 IN. W.C.
Electrical Characteristics 208-1-60

2. Select unit based on required cooling capacity.

Enter Net Cooling Capacities table at condenser entering temperature of 95°F (35°C). Unit 036 at 1200 cfm and 67°F (19°C) ewb (entering wet bulb) will provide a total capacity of 34,800 Btuh and a SHC of 26,310 Btuh. Calculate SHC correction, if required, using Note 4 under Cooling Capacities tables.

3. Select heating capacity of unit to provide design condition requirement.

In the Heating Capacities and Efficiencies table, note that the unit 036060 (208/230 VAC) will provide 49,000 Btuh with an input of 60,000 Btuh.

4. Determine fan speed and power requirements at design conditions.

Before entering the air delivery tables, calculate the total static pressure required. From the given example, the Wet Coil Pressure Drop Table, and the Filter Pressure Drop Table:

External Static Pressure	0.100 IN. W.C
Filter	0.06 IN. W.C
Wet Coil Pressure Drop	0.06 IN. W.C
Total Static Pressure	0.22 IN. W.C

Enter the table for Dry Coil Air Delivery—Horizontal and Downflow Discharge. At .22 IN. W.C. ESP, the closest speed to 1200 CFM is Speed 6 (1223 CFM @ .4 in. W.C.ESP).

Manufacturer reserves the right to change, at any time, specifications and designs without notice and without obligations.

Performance Data

024 Low Cool

EVAPORATOR AIR		CONDENSER ENTERING AIR TEMPERATURES deg F																	
		75 (23.9)			85 (29.4)			95 (35)			105 (40.6)			115 (46.1)			125 (51.7)		
CFM	EWB	Capacity MBtuh		Total Syst KW	Capacity MBtuh		Total Syst KW	Capacity MBtuh		Total Syst KW	Capacity MBtuh		Total Syst KW	Capacity MBtuh		Total Syst KW	Capacity MBtuh		Total Syst KW
		Total	Sens		Total	Sens		Total	Sens		Total	Sens		Total	Sens		Total	Sens	
525	57 (13.8)	16.66	16.66	0.95	15.25	15.25	1.18	13.98	13.98	1.36	12.67	12.67	1.48	11.26	11.26	1.67	10.00	10.00	1.88
	62 (16.6)	17.31	16.52	0.95	15.67	15.39	1.18	14.38	14.38	1.36	13.02	13.02	1.48	11.57	11.57	1.67	10.27	10.27	1.88
	63* (17.2)	17.65	13.33	0.95	15.98	12.44	1.18	14.52	10.79	1.36	13.00	9.78	1.48	11.43	8.25	1.67	9.94	7.24	1.88
	67 (19.4)	18.98	13.89	0.96	17.18	12.96	1.19	15.60	11.24	1.37	13.98	10.18	1.48	12.29	8.60	1.67	10.68	7.54	1.88
	72 (22.2)	20.69	11.11	0.97	18.73	10.24	1.21	17.05	8.85	1.39	15.24	7.94	1.49	13.39	6.62	1.69	11.65	5.65	1.90
600	57 (13.8)	17.47	17.47	0.98	15.99	15.99	1.21	14.66	13.72	1.38	13.29	11.96	1.50	11.81	9.73	1.70	10.48	8.07	1.91
	62 (16.6)	17.66	17.17	0.98	15.99	15.99	1.21	14.67	13.72	1.38	13.29	11.96	1.50	11.81	9.73	1.70	10.48	8.07	1.91
	63* (17.2)	17.85	13.85	0.98	16.16	12.93	1.21	14.69	11.21	1.38	13.15	10.16	1.50	11.56	8.57	1.70	10.05	7.52	1.91
	67 (19.4)	19.20	14.43	0.99	17.38	13.47	1.22	15.78	11.68	1.40	14.14	10.58	1.50	12.43	8.93	1.70	10.81	7.83	1.91
	72 (22.2)	20.93	11.54	1.00	18.94	10.64	1.23	17.24	9.19	1.41	15.41	8.25	1.52	13.55	6.88	1.71	11.78	5.87	1.92
675	57 (13.8)	18.08	18.08	1.00	16.55	16.55	1.23	15.17	14.67	1.41	13.75	12.78	1.53	12.22	10.40	1.72	10.85	8.62	1.93
	62 (16.6)	18.28	18.28	1.00	16.55	16.55	1.23	15.19	14.67	1.41	13.75	12.78	1.53	12.22	10.40	1.72	10.85	8.62	1.93
	63* (17.2)	18.48	14.80	1.00	16.73	13.82	1.23	15.20	11.98	1.41	13.61	10.85	1.53	11.96	9.16	1.72	10.40	8.04	1.93
	67 (19.4)	19.87	15.42	1.01	17.99	14.39	1.24	16.33	12.48	1.42	14.63	11.31	1.53	12.86	9.55	1.72	11.18	8.37	1.93
	72 (22.2)	21.66	12.34	1.02	19.61	11.37	1.25	17.85	9.82	1.43	15.95	8.82	1.54	14.02	7.35	1.74	12.19	6.28	1.95

See Legend and Notes on page 15.

024 High Cool

EVAPORATOR AIR		CONDENSER ENTERING AIR TEMPERATURES °F (°C)																	
		75 (23.9)			85 (29.4)			95 (35)			105 (40.6)			115 (46.1)			125 (51.7)		
CFM	EWB °F (°C)	Capacity MBtuh		Total Sys KW	Capacity MBtuh		Total Sys KW	Capacity MBtuh		Total Sys KW	Capacity MBtuh		Total Sys KW	Capacity MBtuh		Total Sys KW	Capacity MBtuh		Total Sys KW
		Total	Sens		Total	Sens		Total	Sens		Total	Sens		Total	Sens		Total	Sens	
700	57 (13.8)	21.77	21.77	1.54	21.04	21.04	1.69	19.67	19.67	1.89	18.91	18.91	2.12	17.90	17.90	2.33	16.84	16.84	2.60
	62 (16.6)	22.62	21.24	1.54	21.62	20.83	1.69	20.23	19.24	1.89	19.43	18.32	2.12	18.39	16.78	2.33	17.30	15.35	2.60
	63* (17.2)	23.07	17.13	1.54	22.05	16.66	1.69	20.44	15.72	1.89	19.39	15.56	2.12	18.17	14.78	2.33	16.74	14.30	2.60
	67 (19.4)	24.80	17.85	1.56	23.71	17.36	1.71	21.95	16.37	1.91	20.85	16.21	2.12	19.54	15.39	2.33	18.00	14.90	2.60
	72 (22.2)	27.04	14.28	1.57	25.84	13.71	1.73	23.99	12.89	1.92	22.73	12.64	2.14	21.29	11.85	2.35	19.62	11.32	2.63
800	57 (13.8)	22.83	22.83	1.57	22.06	21.82	1.73	20.62	19.99	1.92	19.82	19.03	2.15	18.77	17.43	2.36	17.66	15.95	2.63
	62 (16.6)	23.08	22.07	1.57	22.06	21.64	1.73	20.65	19.99	1.92	19.82	19.03	2.15	18.77	17.43	2.36	17.66	15.95	2.63
	63* (17.2)	23.33	17.80	1.57	22.30	17.31	1.73	20.67	16.33	1.92	19.61	16.17	2.15	18.37	15.35	2.36	16.93	14.86	2.63
	67 (19.4)	25.09	18.54	1.59	23.98	18.03	1.74	22.20	17.01	1.94	21.09	16.84	2.15	19.76	15.99	2.36	18.20	15.48	2.63
	72 (22.2)	27.34	14.83	1.60	26.13	14.25	1.76	24.26	13.39	1.96	22.99	13.14	2.17	21.54	12.31	2.39	19.84	11.77	2.66
900	57 (13.8)	23.63	23.63	1.60	22.83	22.83	1.76	21.35	21.35	1.95	20.52	20.34	2.18	19.43	18.63	2.40	18.28	17.04	2.67
	62 (16.6)	23.89	23.83	1.60	22.83	22.83	1.76	21.37	21.36	1.95	20.52	20.34	2.18	19.43	18.63	2.40	18.28	17.04	2.67
	63* (17.2)	24.15	19.03	1.60	23.08	18.50	1.76	21.39	17.45	1.95	20.30	17.28	2.18	19.02	16.41	2.40	17.52	15.88	2.67
	67 (19.4)	25.96	19.82	1.62	24.82	19.27	1.78	22.98	18.18	1.97	21.83	18.00	2.18	20.45	17.09	2.40	18.84	16.55	2.67
	72 (22.2)	28.30	15.85	1.64	27.05	15.23	1.79	25.11	14.31	1.99	23.79	14.04	2.20	22.29	13.16	2.42	20.54	12.57	2.69

See Legend and Notes on page 15.

Manufacturer reserves the right to change, at any time, specifications and designs without notice and without obligations.

Performance Data (cont)

036 Low Cool

EVAPORATOR AIR		CONDENSER ENTERING AIR TEMPERATURES °F (°C)																	
		75 (23.9)			85 (29.4)			95 (35)			105 (40.6)			115 (46.1)			125 (51.7)		
CFM	EWB	Capacity MBtuh		Total Syst KW	Capacity MBtuh		Total Syst KW	Capacity MBtuh		Total Syst KW	Capacity MBtuh		Total Syst KW	Capacity MBtuh		Total Syst KW	Capacity MBtuh		Total Syst KW
		Total	Sens		Total	Sens		Total	Sens		Total	Sens		Total	Sens		Total	Sens	
775	57 (13.8)	25.49	25.49	1.44	23.33	23.33	1.79	21.39	21.39	2.06	19.39	19.39	2.24	17.23	17.23	2.53	15.30	15.30	2.85
	62 (16.6)	26.48	24.78	1.44	23.97	23.33	1.79	22.00	22.00	2.06	19.93	19.93	2.24	17.70	17.70	2.53	15.72	15.72	2.85
	63* (17.2)	27.01	19.99	1.44	24.45	18.66	1.79	22.22	16.19	2.06	19.89	14.66	2.24	17.48	12.38	2.53	15.20	10.85	2.85
	67 (19.4)	29.04	20.83	1.46	26.29	19.44	1.81	23.87	16.86	2.08	21.39	15.27	2.24	18.80	12.89	2.53	16.35	11.31	2.85
	72 (22.2)	31.66	16.66	1.47	28.66	15.36	1.83	26.09	13.27	2.10	23.31	11.91	2.26	20.49	9.93	2.56	17.82	8.48	2.88
900	57 (13.8)	27.16	27.16	1.48	24.86	24.83	1.83	22.79	20.91	2.10	20.66	18.22	2.28	18.35	14.84	2.57	16.30	12.29	2.89
	62 (16.6)	27.46	26.16	1.48	24.86	24.63	1.83	22.81	20.91	2.10	20.66	18.22	2.28	18.35	14.84	2.57	16.30	12.29	2.89
	63* (17.2)	27.76	21.11	1.48	25.13	19.70	1.83	22.84	17.09	2.10	20.44	15.48	2.28	17.97	13.07	2.57	15.62	11.46	2.89
	67 (19.4)	29.85	21.99	1.50	27.02	20.52	1.85	24.53	17.80	2.12	21.98	16.12	2.28	19.32	13.61	2.57	16.80	11.94	2.89
	72 (22.2)	32.53	17.59	1.51	29.45	16.21	1.87	26.81	14.01	2.14	23.96	12.58	2.30	21.06	10.48	2.60	18.31	8.95	2.92
1025	57 (13.8)	28.46	28.46	1.52	26.05	26.05	1.87	23.88	22.63	2.14	21.65	19.71	2.32	19.23	16.05	2.61	17.07	13.30	2.93
	62 (16.6)	28.77	28.61	1.52	26.05	26.05	1.87	23.90	22.63	2.14	21.65	19.71	2.32	19.23	16.05	2.61	17.07	13.30	2.93
	63* (17.2)	29.08	22.84	1.52	26.33	21.31	1.87	23.93	18.49	2.14	21.42	16.75	2.32	18.83	14.14	2.61	16.37	12.40	2.93
	67 (19.4)	31.27	23.79	1.54	28.31	22.20	1.89	25.70	19.26	2.16	23.03	17.45	2.32	20.24	14.73	2.61	17.60	12.91	2.93
	72 (22.2)	34.09	19.03	1.55	30.86	17.54	1.91	28.09	15.16	2.18	25.10	13.61	2.34	22.06	11.34	2.64	19.19	9.69	2.96

See Legend and Notes on page 15.

036 High Cool

EVAPORATOR AIR		CONDENSER ENTERING AIR TEMPERATURES °F (°C)																	
		75 (23.9)			85 (29.4)			95 (35)			105 (40.6)			115 (46.1)			125 (51.7)		
CFM	EWB °F (°C)	Capacity MBtuh		Total Sys KW	Capacity MBtuh		Total Sys KW	Capacity MBtuh		Total Sys KW	Capacity MBtuh		Total Sys KW	Capacity MBtuh		Total Sys KW	Capacity MBtuh		Total Sys KW
		Total	Sens		Total	Sens		Total	Sens		Total	Sens		Total	Sens		Total	Sens	
1050	57 (13.8)	33.53	33.53	2.37	32.37	32.37	2.61	30.83	30.83	2.91	29.02	29.02	3.26	27.43	27.43	3.59	25.76	25.76	4.01
	62 (16.6)	34.83	32.24	2.37	33.26	31.45	2.61	31.72	29.75	2.91	29.81	27.47	3.26	28.19	25.39	3.59	26.46	23.21	4.01
	63* (17.2)	35.52	26.01	2.37	33.92	25.16	2.61	32.03	24.31	2.91	29.76	23.34	3.26	27.84	22.37	3.59	25.60	21.64	4.01
	67 (19.4)	38.19	27.10	2.40	36.47	26.21	2.64	34.41	25.32	2.94	32.00	24.31	3.26	29.94	23.30	3.59	27.53	22.54	4.01
	72 (22.2)	41.63	21.68	2.42	39.76	20.71	2.66	37.61	19.93	2.97	34.88	18.96	3.30	32.63	17.94	3.63	30.00	17.13	4.05
1200	57 (13.8)	35.15	34.91	2.42	33.94	32.95	2.66	32.33	30.91	2.95	30.42	28.54	3.31	28.76	26.38	3.64	27.00	24.12	4.06
	62 (16.6)	35.54	33.50	2.42	33.94	32.68	2.66	32.36	30.91	2.95	30.42	28.54	3.31	28.76	26.38	3.64	27.00	24.12	4.06
	63* (17.2)	35.92	27.03	2.42	34.31	26.14	2.66	32.40	25.26	2.95	30.10	24.25	3.31	28.16	23.24	3.64	25.89	22.48	4.06
	67 (19.4)	38.63	28.15	2.45	36.89	27.23	2.69	34.80	26.31	2.98	32.36	25.26	3.31	30.28	24.21	3.64	27.84	23.42	4.06
	72 (22.2)	42.10	22.52	2.47	40.21	21.51	2.71	38.04	20.71	3.01	35.28	19.70	3.35	33.00	18.64	3.68	30.35	17.80	4.10
1350	57 (13.8)	36.38	36.38	2.47	35.12	35.12	2.71	33.46	33.04	3.00	31.49	30.50	3.36	29.77	28.20	3.69	27.95	25.78	4.11
	62 (16.6)	36.78	36.18	2.47	35.12	34.92	2.71	33.50	33.04	3.00	31.49	30.50	3.36	29.77	28.20	3.69	27.95	25.78	4.11
	63* (17.2)	37.18	28.88	2.47	35.51	27.94	2.71	33.53	26.99	3.00	31.15	25.91	3.36	29.14	24.83	3.69	26.80	24.02	4.11
	67 (19.4)	39.98	30.09	2.49	38.18	29.10	2.73	36.02	28.12	3.03	33.50	26.99	3.36	31.34	25.87	3.69	28.81	25.03	4.11
	72 (22.2)	43.58	24.07	2.52	41.62	22.99	2.76	39.37	22.13	3.06	36.51	21.06	3.39	34.16	19.92	3.72	31.41	19.02	4.15

See Legend and Notes on page 15.

Manufacturer reserves the right to change, at any time, specifications and designs without notice and without obligations.

Performance Data (cont)

048 Low Cool

EVAPORATOR AIR		CONDENSER ENTERING AIR TEMPERATURES °F (°C)																	
		75 (23.9)			85 (29.4)			95 (35)			105 (40.6)			115 (46.1)			125 (51.7)		
CFM	EWB	Capacity MBtuh		Total Syst KW	Capacity MBtuh		Total Syst KW	Capacity MBtuh		Total Syst KW	Capacity MBtuh		Total Syst KW	Capacity MBtuh		Total V KW	Capacity MBtuh		Total Syst KW
		Total	Sens		Total	Sens		Total	Sens		Total	Sens		Total	Sens		Total	Sens	
1050	57	35.30	35.30	1.93	32.30	32.30	2.40	29.61	29.61	2.76	26.85	26.85	3.00	23.85	23.85	3.39	21.18	21.18	3.82
	62	36.67	34.61	1.93	33.19	32.58	2.40	30.46	30.46	2.76	27.59	27.59	3.00	24.51	24.51	3.39	21.76	21.76	3.82
	63	37.40	27.92	1.93	33.85	26.06	2.40	30.76	22.60	2.76	27.54	20.48	3.00	24.21	17.29	3.39	21.05	15.16	3.82
	67	40.21	29.09	1.95	36.40	27.15	2.43	33.04	23.55	2.79	29.61	21.33	3.00	26.03	18.01	3.39	22.63	15.79	3.82
	72	43.83	23.27	1.97	39.68	21.45	2.45	36.12	18.53	2.82	32.28	16.64	3.03	28.37	13.86	3.43	24.67	11.84	3.86
1200	57	37.01	37.01	1.98	33.87	33.87	2.45	31.05	28.74	2.81	28.15	25.04	3.05	25.01	20.39	3.44	22.20	16.90	3.87
	62	37.41	35.96	1.98	33.87	33.85	2.45	31.08	28.74	2.81	28.15	25.04	3.05	25.01	20.39	3.44	22.20	16.90	3.87
	63	37.82	29.01	1.98	34.24	27.08	2.45	31.11	23.48	2.81	27.85	21.27	3.05	24.48	17.96	3.44	21.29	15.75	3.87
	67	40.67	30.22	2.00	36.81	28.20	2.48	33.42	24.46	2.84	29.95	22.16	3.05	26.32	18.71	3.44	22.89	16.40	3.87
	72	44.33	24.18	2.02	40.13	22.28	2.50	36.53	19.25	2.86	32.64	17.29	3.08	28.69	14.40	3.48	24.95	12.30	3.91
1350	57	38.30	38.30	2.03	35.06	35.06	2.50	32.13	30.72	2.85	29.14	26.76	3.10	25.88	21.79	3.49	22.98	18.06	3.92
	62	38.72	38.72	2.03	35.06	35.06	2.50	32.17	30.72	2.85	29.14	26.76	3.10	25.88	21.79	3.49	22.98	18.06	3.92
	63	39.14	31.00	2.03	35.44	28.94	2.50	32.20	25.10	2.85	28.83	22.74	3.10	25.34	19.19	3.49	22.03	16.83	3.92
	67	42.09	32.30	2.05	38.10	30.14	2.52	34.59	26.14	2.88	31.00	23.68	3.10	27.24	19.99	3.49	23.69	17.53	3.92
	72	45.88	25.84	2.07	41.53	23.81	2.55	37.81	20.58	2.91	33.79	18.47	3.13	29.70	15.39	3.52	25.82	13.15	3.96

See Legend and Notes on page 15.

048 High Cool

EVAPORATOR AIR		CONDENSER ENTERING AIR TEMPERATURES °F (°C)																	
		75 (23.9)			85 (29.4)			95 (35)			105 (40.6)			115 (46.1)			125 (51.7)		
CFM	EWB °F (°C)	Capacity MBtuh		Total Sys KW	Capacity MBtuh		Total Sys KW	Capacity MBtuh		Total Sys KW	Capacity MBtuh		Total Sys KW	Capacity MBtuh		Total Sys KW	Capacity MBtuh		Total Sys KW
		Total	Sens		Total	Sens		Total	Sens		Total	Sens		Total	Sens		Total	Sens	
1400	57 (13.8)	44.80	44.80	3.22	43.25	43.25	3.54	41.20	41.20	3.95	38.77	38.77	4.43	36.65	36.65	4.88	34.42	34.42	5.44
	62 (16.6)	46.54	44.19	3.22	44.44	43.11	3.54	42.38	40.78	3.95	39.84	37.65	4.43	37.66	34.80	4.88	35.36	31.82	5.44
	63* (17.2)	47.46	35.65	3.22	45.32	34.49	3.54	42.80	33.32	3.95	39.77	31.99	4.43	37.20	30.65	4.88	34.21	29.65	5.44
	67 (19.4)	51.03	37.14	3.26	48.74	35.92	3.58	45.98	34.71	3.99	42.76	33.32	4.43	40.00	31.93	4.88	36.78	30.89	5.44
	72 (22.2)	55.63	29.71	3.29	53.12	28.38	3.62	50.25	27.31	4.03	46.61	25.99	4.48	43.60	24.59	4.93	40.09	23.48	5.50
1600	57 (13.8)	46.97	46.97	3.29	45.35	45.16	3.61	43.20	42.37	4.01	40.65	39.12	4.50	38.43	36.16	4.94	36.08	33.06	5.51
	62 (16.6)	47.49	45.92	3.29	45.35	44.79	3.61	43.25	42.37	4.01	40.65	39.12	4.50	38.43	36.16	4.94	36.08	33.06	5.51
	63* (17.2)	48.00	37.04	3.29	45.84	35.83	3.61	43.29	34.62	4.01	40.22	33.23	4.50	37.62	31.85	4.94	34.60	30.81	5.51
	67 (19.4)	51.62	38.58	3.32	49.29	37.32	3.65	46.50	36.06	4.05	43.25	34.62	4.50	40.46	33.18	4.94	37.20	32.09	5.51
	72 (22.2)	56.26	30.87	3.35	53.73	29.48	3.68	50.82	28.38	4.09	47.14	27.00	4.54	44.10	25.54	4.99	40.55	24.39	5.56
1800	57 (13.8)	48.61	48.61	3.35	46.93	46.93	3.67	44.71	44.71	4.07	42.07	41.81	4.56	39.78	38.65	5.01	37.35	35.33	5.57
	62 (16.6)	49.15	49.15	3.35	46.93	46.93	3.67	44.76	44.76	4.07	42.07	41.81	4.56	39.78	38.65	5.01	37.35	35.33	5.57
	63* (17.2)	49.68	39.59	3.35	47.44	38.29	3.67	44.81	37.00	4.07	41.63	35.52	4.56	38.94	34.04	5.01	35.81	32.93	5.57
	67 (19.4)	53.42	41.24	3.39	51.02	39.89	3.71	48.13	38.54	4.11	44.76	37.00	4.56	41.87	35.46	5.01	38.50	34.30	5.57
	72 (22.2)	58.23	32.99	3.42	55.61	31.51	3.75	52.60	30.33	4.15	48.79	28.86	4.60	45.64	27.30	5.05	41.97	26.07	5.63

See Legend and Notes on page 15.

Manufacturer reserves the right to change, at any time, specifications and designs without notice and without obligations.

Performance Data (cont)

060 Low Cool

EVAPORATOR AIR		CONDENSER ENTERING AIR TEMPERATURES deg F																	
		75 (23.9)			85 (29.4)			95 (35)			105 (40.6)			115 (46.1)			125 (51.7)		
CFM	EWB	Capacity MBtuh		Total Syst KW	Capacity MBtuh		Total Syst KW	Capacity MBtuh		Total Syst KW	Capacity MBtuh		Total Syst KW	Capacity MBtuh		Total Syst KW	Capacity MBtuh		Total Syst KW
		Total	Sens		Total	Sens		Total	Sens		Total	Sens		Total	Sens		Total	Sens	
1050	57 (13.8)	40.34	40.34	2.28	36.92	36.92	2.83	33.84	33.84	3.25	30.68	30.68	3.53	27.26	26.92	3.99	24.20	23.90	4.49
	62 (16.6)	41.90	37.31	2.28	37.93	35.11	2.83	34.81	34.81	3.25	31.53	30.70	3.53	28.01	26.92	3.99	24.87	23.90	4.49
	63* (17.2)	42.74	30.10	2.28	38.69	28.09	2.83	35.16	24.36	3.25	31.47	22.07	3.53	27.66	18.63	3.99	24.06	16.34	4.49
	67 (19.4)	45.95	31.35	2.30	41.60	29.26	2.86	37.76	25.38	3.28	33.84	22.99	3.53	29.75	19.41	3.99	25.87	17.02	4.49
	72 (22.2)	50.09	25.08	2.33	45.34	23.12	2.89	41.28	19.97	3.31	36.89	17.93	3.56	32.42	14.94	4.03	28.19	12.76	4.54
1200	57 (13.8)	42.29	40.39	2.33	38.71	36.78	2.87	35.48	30.98	3.29	32.17	26.99	3.58	28.58	21.98	4.04	25.38	18.21	4.54
	62 (16.6)	42.76	38.76	2.33	38.71	36.48	2.87	35.52	30.98	3.29	32.17	26.99	3.58	28.58	21.98	4.04	25.38	18.21	4.54
	63* (17.2)	43.22	31.27	2.33	39.13	29.18	2.87	35.56	25.31	3.29	31.83	22.93	3.58	27.98	19.36	4.04	24.33	16.97	4.54
	67 (19.4)	46.48	32.57	2.35	42.07	30.40	2.90	38.19	26.37	3.33	34.23	23.89	3.58	30.08	20.16	4.04	26.16	17.68	4.54
	72 (22.2)	50.66	26.06	2.37	45.86	24.02	2.93	41.75	20.75	3.36	37.31	18.63	3.61	32.79	15.53	4.08	28.51	13.26	4.59
1350	57 (13.8)	43.77	43.16	2.37	40.06	39.31	2.92	36.72	33.11	3.34	33.30	28.85	3.63	29.58	23.49	4.09	26.26	19.46	4.59
	62 (16.6)	44.26	41.86	2.37	40.06	38.99	2.92	36.76	33.11	3.34	33.30	28.85	3.63	29.58	23.49	4.09	26.26	19.46	4.59
	63* (17.2)	44.74	33.42	2.37	40.50	31.19	2.92	36.80	27.05	3.34	32.94	24.51	3.63	28.96	20.69	4.09	25.18	18.14	4.59
	67 (19.4)	48.10	34.81	2.40	43.55	32.49	2.95	39.53	28.18	3.37	35.42	25.53	3.63	31.14	21.55	4.09	27.08	18.90	4.59
	72 (22.2)	52.43	27.85	2.42	47.47	25.67	2.98	43.21	22.18	3.41	38.61	19.91	3.66	33.94	16.59	4.13	29.51	14.17	4.63

See Legend and Notes on page 15.

060 High Cool

EVAPORATOR AIR		CONDENSER ENTERING AIR TEMPERATURES °F (°C)																	
		75 (23.9)			85 (29.4)			95 (35)			105 (40.6)			115 (46.1)			125 (51.7)		
CFM	EWB °F (°C)	Capacity MBtuh		Total Sys KW	Capacity MBtuh		Total Sys KW	Capacity MBtuh		Total Sys KW	Capacity MBtuh		Total Sys KW	Capacity MBtuh		Total Sys KW	Capacity MBtuh		Total Sys KW
		Total	Sens		Total	Sens		Total	Sens		Total	Sens		Total	Sens		Total	Sens	
1600	57 (13.8)	51.83	51.83	3.84	50.94	50.94	4.22	48.99	48.99	4.69	47.09	47.09	5.26	44.59	43.26	5.79	40.92	39.47	6.46
	62 (16.6)	53.92	51.75	3.84	52.43	49.58	4.22	50.47	46.90	4.69	48.46	42.40	5.26	45.89	37.85	5.79	42.12	34.54	6.46
	63* (17.2)	55.03	41.75	3.84	53.50	39.66	4.22	51.00	38.32	4.69	48.40	36.02	5.26	45.34	33.34	5.79	40.76	32.19	6.46
	67 (19.4)	59.17	43.49	3.88	57.52	41.31	4.26	54.78	39.92	4.74	52.04	37.52	5.26	48.76	34.73	5.79	43.83	33.53	6.46
	72 (22.2)	64.49	34.79	3.91	61.53	32.64	4.30	56.35	31.41	4.78	56.73	29.27	5.32	53.15	26.74	5.85	47.77	25.48	6.52
1750	57 (13.8)	55.04	55.04	3.88	54.10	52.07	4.26	52.02	48.86	4.74	50.01	44.17	5.31	47.35	39.43	5.84	43.46	35.98	6.51
	62 (16.6)	55.64	53.91	3.88	54.10	51.64	4.26	52.08	48.86	4.74	50.01	44.17	5.31	47.35	39.43	5.84	43.46	35.98	6.51
	63* (17.2)	56.25	43.49	3.88	54.68	41.31	4.26	52.14	39.92	4.74	49.48	37.52	5.31	46.35	34.73	5.84	41.66	33.53	6.51
	67 (19.4)	60.48	45.30	3.92	58.80	43.04	4.31	56.00	41.58	4.79	53.20	39.09	5.31	49.84	36.17	5.84	44.80	34.93	6.51
	72 (22.2)	65.92	36.24	3.96	64.09	34.00	4.35	61.21	32.72	4.83	57.99	30.49	5.36	54.33	27.85	5.90	48.83	26.54	6.57
2000	57 (13.8)	56.61	56.61	3.96	55.64	55.64	4.34	53.51	53.04	4.82	51.44	47.95	5.39	48.70	42.81	5.92	44.70	39.06	6.59
	62 (16.6)	57.23	57.23	3.96	55.64	55.64	4.34	53.57	53.04	4.82	51.44	47.95	5.39	48.70	42.81	5.92	44.70	39.06	6.59
	63* (17.2)	57.85	47.22	3.96	56.25	44.86	4.34	53.63	43.34	4.82	50.89	40.74	5.39	47.68	37.70	5.92	42.85	36.40	6.59
	67 (19.4)	62.21	49.18	4.00	60.48	46.72	4.39	57.60	45.14	4.87	54.72	42.44	5.39	51.26	39.28	5.92	46.08	37.92	6.59
	72 (22.2)	67.81	39.35	4.04	65.92	36.91	4.43	62.96	35.53	4.91	59.64	33.10	5.44	55.88	30.24	5.98	50.23	28.82	6.65

See Legend and Notes on page 15.

Manufacturer reserves the right to change, at any time, specifications and designs without notice and without obligations.

Performance Data (Cont)

*At 75°F (24°C) entering dry bulb-Tennessee Valley Authority (TVA) rating conditions; all others at 80°F (27°C) dry bulb.

LEGEND
BF— Bypass Factor
edb— Entering Dry-Bulb
Ewb— Entering Wet-Bulb
kW — Total Unit Power Input
SHC— Sensible Heat Capacity (1000 Btuh)
TC — Total Capacity (1000 Btuh) (net)
rh—Relative Humidity

COOLING NOTES:
1. Ratings are net; they account for the effects of the evaporator-fan motor power and heat.
2. Direct interpolation is permissible. Do not extrapolate.
3. The following formulas may be used:

$$^{t}ldb = {}^{t}edb - \frac{\text{Sensible capacity (Btuh)}}{1.10 \times \text{CFM}}$$

$^{t}lwb =$ Wet-bulb temperature corresponding to enthalpy air leaving evaporator coil (^{h}lwb)

$$^{h}lwb = {}^{h}ewb - \frac{\text{total capacity (Btuh)}}{(4.5 \times \text{CFM})}$$

Where: ^{h}ewb = Enthalpy of air entering evaporator coil

4. The SHC is based on 80° F (26.6°C) edb temperature of air entering evaporator coil. Below 80°F (26.6°C) edb, subtract (corr factor x cfm) from SHC. Above 80° F (26.6°C) edb, add (corr factor x cfm) to SHC.
Correction Factor = 1.10 x (1 + BF) x (edb - 80).
5. Integrated capacity is maximum (instantaneous) capacity less the effect of frost on the outdoor coil and the heat required to defrost it.

Manufacturer reserves the right to change, at any time, specifications and designs without notice and without obligations.

Gas Adjustment

Natural Gas Orifice Sizes and Manifold Pressure

Single and Three Phase Models

Nameplate Input (Btu/hr)		Altitude of Installation (FT. Above Sea Level) U.S.A.*
		0 to 2000 (0-610 m)
45,000	Orifice No. (Qty)	0.125-in.
	Manifold Press. (in. W.C.)	3.2~3.8
60,000	Orifice No. (Qty)	28 (1)
	Manifold Press. (in. W.C.)	3.2~3.8
89,000	Orifice No. (Qty)	18 (1)
	Manifold Press. (in. W.C.)	3.2~3.8

*. Altitude of 2001ft and above is not allowed.

High Altitude Compensation, Natural Gas - Single and Three Phase Models

Nameplate Input (Btu/hr)	Rated Heating Input (Btu/hr), Natural Gas at Installation Altitude Above Sea Level, U.S.A.**
	0 to 2000 ft (0-610 m)
45,000	45,000
60,000	60,000
89,000	89,000

*. Altitude of 2001 ft and above is not allowed.

Manufacturer reserves the right to change, at any time, specifications and designs without notice and without obligations.

Dry Coil Air Delivery** - Horizontal and Downflow Discharge Sizes 24-60 208/230 VAC - 1,3 Phase

Unit Size	Heating Rise °F (°C)	Motor Speed	Allowable Functions	Motor Speed Selection		ESP (in. W.C.)	0.1	0.2	0.3	0.4	0.5	0.6	0.7	0.8	0.9	1
24040	25 - 55 (14 - 31)	1	Continuous Fan*	SW2-5	SW2-6	CFM	712	625	531	440	344	208	NA	NA	NA	NA
				OFF	OFF											
			Dehumidification Low	SW1-7	SW1-8											
				OFF	OFF											
			Low Stage Cooling	SW1-3	SW1-4	BHP	0.09	0.10	0.10	0.10	0.11	0.11	NA	NA	NA	NA
				OFF	OFF											
		2	Continuous Fan	SW2-5	SW2-6	CFM	512	460	344	212	NA	NA	NA	NA	NA	NA
				ON	OFF											
			Dehumidification Low	SW1-7	SW1-8											
				ON	OFF											
			Low Stage Cooling	SW1-3	SW1-4	BHP	0.06	0.06	0.07	0.07	NA	NA	NA	NA	NA	NA
				ON	OFF											
		3				CFM	888	818	750	679	606	511	425	320	238	NA
			Dehumidification Low	SW1-7	SW1-8											
				OFF	ON											
			Low Stage Cooling	SW1-3	SW1-4	BHP	0.18	0.18	0.19	0.19	0.20	0.20	0.21	0.21	0.22	NA
				OFF	ON											
		4				CFM	768	686	604	520	430	327	210	115	NA	NA
			Dehumidification Low	SW1-7	SW1-8											
				ON	ON											
			Low Stage Cooling*	SW1-3	SW1-4	BHP	0.11	0.11	0.12	0.12	0.13	0.13	0.13	0.13	NA	NA
				ON	ON											
24040	25 - 55 (14 - 31)	5	Dehumidification High	SW1-5	SW1-6	CFM	900	824	753	680	604	528	446	344	240	130
				OFF	OFF											
			High Stage Cooling	SW1-1	SW1-2	BHP	0.15	0.15	0.16	0.17	0.17	0.18	0.18	0.19	0.19	0.19
				OFF	OFF											
			Heating*	SW2-1	SW2-2	Gas Heat Rise (°F)	37	41	44	49	55	NA	NA	NA	NA	NA
				OFF	OFF	Gas Heat Rise (°C)	21	23	25	27	31	NA	NA	NA	NA	NA
		6	Dehumidification High	SW1-5	SW1-6	CFM	1063	994	929	866	803	741	673	610	528	453
				ON	OFF											
			High Stage Cooling	SW1-1	SW1-2	BHP	0.21	0.22	0.23	0.23	0.24	0.25	0.25	0.26	0.26	0.27
				ON	OFF											
			Heating	SW2-1	SW2-2	Gas Heat Rise (°F)	31	34	36	39	42	45	50	55	NA	NA
				ON	OFF	Gas Heat Rise (°C)	17	19	20	21	23	25	28	30	NA	NA
		7	Dehumidification High	SW1-5	SW1-6	CFM	956	883	817	747	676	604	529	450	348	241
				OFF	ON											
			High Stage Cooling	SW1-1	SW1-2	BHP	0.17	0.18	0.18	0.19	0.19	0.20	0.20	0.21	0.21	0.22
				OFF	ON											
				SW2-1	SW2-2	Gas Heat Rise (°F)	NA	NA	NA	NA	NA	NA	NA	NA	NA	NA
				OFF	ON	Gas Heat Rise (°C)	NA	NA	NA	NA	NA	NA	NA	NA	NA	NA
		8	Dehumidification High	SW1-5	SW1-6	CFM	1122	1064	1003	943	882	820	758	697	632	567
				ON	ON											
			High Stage Cooling*	SW1-1	SW1-2	BHP	0.25	0.26	0.26	0.27	0.28	0.28	0.29	0.30	0.30	0.31
				ON	ON											
						Gas Heat Rise (°F)	NA	NA	NA	NA	NA	NA	NA	NA	NA	NA
			High Static Cooling	SW2-8		Gas Heat Rise (°C)	NA	NA	NA	NA	NA	NA	NA	NA	NA	NA
				OFF												
		9	High Static Cooling	SW2-8		CFM	1369	1308	1255	1204	1152	1105	1052	999	909	806
				ON		BHP	0.40	0.41	0.41	0.42	0.43	0.44	0.45	0.46	0.44	0.42

Manufacturer reserves the right to change, at any time, specifications and designs without notice and without obligations.

Dry Coil Air Delivery** - Horizontal and Downflow Discharge Sizes 24-60 208/230 VAC - 1,3 Phase (Continued)

Unit Size	Heating Rise °F (°C)	Motor Speed	Allowable Functions	Motor Speed Selection		ESP (in. W.C.)	0.1	0.2	0.3	0.4	0.5	0.6	0.7	0.8	0.9	1
24060	25 - 55 (14 - 31)	1	Continuous Fan*	SW2-5 OFF	SW2-6 OFF	CFM	712	625	531	440	344	208	NA	NA	NA	NA
			Dehumidification Low	SW1-7 OFF	SW1-8 OFF											
			Low Stage Cooling	SW1-3 OFF	SW1-4 OFF	BHP	0.09	0.10	0.10	0.10	0.11	0.11	NA	NA	NA	NA
		2				CFM	804	725	643	555	471	380	281	NA	NA	NA
			Dehumidification Low	SW1-7 ON	SW1-8 OFF											
			Low Stage Cooling	SW1-3 ON	SW1-4 OFF	BHP	0.11	0.12	0.13	0.13	0.13	0.14	0.14	NA	NA	NA
		3				CFM	956	883	817	747	676	604	529	450	348	241
			Dehumidification Low	SW1-7 OFF	SW1-8 ON											
			Low Stage Cooling	SW1-3 OFF	SW1-4 ON	BHP	0.17	0.18	0.18	0.19	0.19	0.20	0.20	0.21	0.21	0.22
		4				CFM	768	686	604	520	430	327	210	115	NA	NA
			Dehumidification Low	SW1-7 ON	SW1-8 ON											
			Low Stage Cooling*	SW1-3 ON	SW1-4 ON	BHP	0.11	0.11	0.12	0.12	0.13	0.13	0.13	0.13	NA	NA
24060	25 - 55 (14 - 31)	5	Dehumidification High	SW1-5 OFF	SW1-6 OFF	CFM	1122	1064	1003	943	882	820	758	697	632	567
			High Stage Cooling	SW1-1 OFF	SW1-2 OFF	BHP	0.25	0.26	0.26	0.27	0.28	0.28	0.29	0.30	0.30	0.31
			Heating*	SW2-1 OFF	SW2-2 OFF	Gas Heat Rise (°F)	40	42	45	47	51	54	NA	NA	NA	NA
						Gas Heat Rise (°C)	22	23	25	26	28	30	NA	NA	NA	NA
		6	Dehumidification High	SW1-5 ON	SW1-6 OFF	CFM	956	883	817	747	676	604	529	450	348	241
			High Stage Cooling	SW1-1 ON	SW1-2 OFF	BHP	0.17	0.18	0.18	0.19	0.19	0.20	0.20	0.21	0.21	0.22
			Heating	SW2-1 ON	SW2-2 OFF	Gas Heat Rise (°F)	47	51	55	NA	NA	NA	NA	NA	NA	NA
						Gas Heat Rise (°C)	26	28	30	NA	NA	NA	NA	NA	NA	NA
		7	Dehumidification High	SW1-5 OFF	SW1-6 ON	CFM	1122	1064	1003	943	882	820	758	697	632	567
			High Stage Cooling*	SW1-1 OFF	SW1-2 ON	BHP	0.25	0.26	0.26	0.27	0.28	0.28	0.29	0.30	0.30	0.31
				SW2-1 OFF	SW2-2 ON	Gas Heat Rise (°F)	NA	NA	NA	NA	NA	NA	NA	NA	NA	NA
						Gas Heat Rise (°C)	NA	NA	NA	NA	NA	NA	NA	NA	NA	NA
		8	Dehumidification High	SW1-5 ON	SW1-6 ON	CFM	1204	1146	1088	1031	977	919	860	802	744	682
			High Stage Cooling	SW1-1 ON	SW1-2 ON	BHP	0.29	0.30	0.31	0.31	0.32	0.33	0.34	0.34	0.35	0.36
				SW2-1 ON	SW2-2 ON	Gas Heat Rise (°F)	NA	NA	NA	NA	NA	NA	NA	NA	NA	NA
			High Static Cooling	SW2-8 OFF		Gas Heat Rise (°C)	NA	NA	NA	NA	NA	NA	NA	NA	NA	NA
		9	High Static Cooling	SW2-8 ON		CFM	1369	1308	1255	1204	1152	1105	1052	999	909	806
						BHP	0.40	0.41	0.41	0.42	0.43	0.44	0.45	0.46	0.44	0.42

Manufacturer reserves the right to change, at any time, specifications and designs without notice and without obligations.

Dry Coil Air Delivery** - Horizontal and Downflow Discharge Sizes 24-60 208/230 VAC - 1,3 Phase (Continued)

Unit Size	Heating Rise °F (°C)	Motor Speed	Allowable Functions	Motor Speed Selection			ESP (in. W.C.)									
							0.1	0.2	0.3	0.4	0.5	0.6	0.7	0.8	0.9	1
36060	25 - 55 (14 - 31)	1	Continuous Fan*	SW2-5	SW2-6	CFM	980	882	814	747	679	608	545	482	432	384
				OFF	OFF											
			Dehumidification Low	SW1-7	SW1-8											
				OFF	OFF											
			Low Stage Cooling	SW1-3	SW1-4	BHP	0.11	0.11	0.12	0.12	0.13	0.14	0.15	0.15	0.16	0.17
				OFF	OFF											
		2	Continuous Fan	SW2-5	SW2-6	CFM	956	801	727	655	580	507	448	391	340	288
				ON	OFF											
			Dehumidification Low	SW1-7	SW1-8											
				ON	OFF											
			Low Stage Cooling	SW1-3	SW1-4	BHP	0.11	0.09	0.10	0.11	0.12	0.12	0.13	0.14	0.14	0.15
				ON	OFF											
		3	Continuous Fan	SW2-5	SW2-6	CFM	1178	1123	1068	1011	955	900	842	782	725	668
				OFF	ON											
			Dehumidification Low	SW1-7	SW1-8											
				OFF	ON											
			Low Stage Cooling	SW1-3	SW1-4	BHP	0.16	0.17	0.18	0.19	0.20	0.21	0.22	0.23	0.24	0.25
				OFF	ON											
		4	Continuous Fan	SW2-5	SW2-6	CFM	1028	964	901	838	774	711	647	588	532	484
				ON	ON											
			Dehumidification Low	SW1-7	SW1-8											
				ON	ON											
			Low Stage Cooling*	SW1-3	SW1-4	BHP	0.12	0.13	0.14	0.15	0.15	0.16	0.17	0.18	0.19	0.19
				ON	ON											

Manufacturer reserves the right to change, at any time, specifications and designs without notice and without obligations.

Dry Coil Air Delivery** - Horizontal and Downflow Discharge Sizes 24-60 208/230 VAC - 1,3 Phase (Continued)

Unit Size	Heating Rise °F (°C)	Motor Speed	Allowable Functions	Motor Speed Selection			ESP (in. W.C.)									
							0.1	0.2	0.3	0.4	0.5	0.6	0.7	0.8	0.9	1
36060	25 - 55 (14 - 31)	5	Dehumidification High	SW1-5	SW1-6	CFM	1190	1134	1085	1025	972	915	861	804	746	692
				OFF	OFF											
			High Stage Cooling	SW1-1	SW1-2	BHP	0.17	0.18	0.19	0.20	0.21	0.22	0.22	0.23	0.24	0.25
				OFF	OFF											
			Heating*	SW2-1	SW2-2	Gas Heat Rise (°F)	38	39	41	44	46	49	52	NA	NA	NA
				OFF	OFF	Gas Heat Rise (°C)	21	22	23	24	26	27	29	NA	NA	NA
		6	Dehumidification High	SW1-5	SW1-6	CFM	1385	1323	1274	1223	1176	1130	1082	1032	979	928
				ON	OFF											
			High Stage Cooling	SW1-1	SW1-2	BHP	0.24	0.25	0.26	0.27	0.28	0.29	0.30	0.31	0.32	0.33
				ON	OFF											
			Heating	SW2-1	SW2-2	Gas Heat Rise (°F)	32	34	35	36	38	40	41	43	46	48
				ON	OFF	Gas Heat Rise (°C)	18	19	19	20	21	22	23	24	25	27
		7	Dehumidification High	SW1-5	SW1-6	CFM	1299	1246	1196	1146	1095	1043	990	937	886	825
				OFF	ON											
			High Stage Cooling	SW1-1	SW1-2	BHP	0.21	0.21	0.22	0.23	0.24	0.25	0.26	0.27	0.28	0.29
				OFF	ON											
				SW2-1	SW2-2	Gas Heat Rise (°F)	NA	NA	NA	NA	NA	NA	NA	NA	NA	NA
				OFF	ON	Gas Heat Rise (°C)	NA	NA	NA	NA	NA	NA	NA	NA	NA	NA
		8	Dehumidification High	SW1-5	SW1-6	CFM	1423	1377	1331	1288	1240	1192	1147	1097	1047	998
				ON	ON											
			High Stage Cooling*	SW1-1	SW1-2	BHP	0.26	0.27	0.28	0.29	0.30	0.32	0.33	0.34	0.35	0.36
				ON	ON											
						Gas Heat Rise (°F)	NA	NA	NA	NA	NA	NA	NA	NA	NA	NA
			High Static Cooling	SW2-8		Gas Heat Rise (°C)	NA	NA	NA	NA	NA	NA	NA	NA	NA	NA
				OFF												
		9	High Static Cooling	SW2-8		CFM	1511	1466	1420	1378	1338	1293	1245	1200	1156	1109
				ON		BHP	0.30	0.31	0.33	0.34	0.35	0.36	0.37	0.38	0.39	0.40

Dry Coil Air Delivery** - Horizontal and Downflow Discharge Sizes 24-60 208/230 VAC - 1,3 Phase (Continued)

Unit Size	Heating Rise °F (°C)	Motor Speed	Allowable Functions	Motor Speed Selection		ESP (in. W.C.)										
							0.1	0.2	0.3	0.4	0.5	0.6	0.7	0.8	0.9	1
48090	35 - 65 (19 - 36)	1	Continuous Fan*	SW2-5	SW2-6	CFM	923	812	741	677	614	549	494	444	387	338
				OFF	OFF											
			Dehumidification Low	SW1-7	SW1-8											
				OFF	OFF											
			Low Stage Cooling	SW1-3	SW1-4	BHP	0.10	0.10	0.11	0.11	0.12	0.13	0.14	0.14	0.15	0.16
				OFF	OFF											
		2	Continuous Fan	SW2-5	SW2-6	CFM	945	885	820	757	696	638	579	527	480	429
				ON	OFF											
			Dehumidification Low	SW1-7	SW1-8											
				ON	OFF											
			Low Stage Cooling	SW1-3	SW1-4	BHP	0.11	0.12	0.12	0.13	0.14	0.15	0.16	0.16	0.17	0.18
				ON	OFF											
		3	Continuous Fan	SW2-5	SW2-6	CFM	1102	1051	999	945	890	837	785	734	681	634
				OFF	ON											
			Dehumidification Low	SW1-7	SW1-8											
				OFF	ON											
			Low Stage Cooling	SW1-3	SW1-4	BHP	0.15	0.16	0.17	0.18	0.19	0.20	0.21	0.22	0.23	0.24
				OFF	ON											
		4	Continuous Fan	SW2-5	SW2-6	CFM	1297	1253	1207	1163	1115	1066	1018	974	931	888
				ON	ON											
			Dehumidification Low	SW1-7	SW1-8											
				ON	ON											
			Low Stage Cooling*	SW1-3	SW1-4	BHP	0.23	0.24	0.24	0.26	0.27	0.27	0.28	0.29	0.30	0.31
				ON	ON											

Manufacturer reserves the right to change, at any time, specifications and designs without notice and without obligations.

Dry Coil Air Delivery** - Horizontal and Downflow Discharge Sizes 24-60 208/230 VAC - 1,3 Phase (Continued)

Unit Size	Heating Rise °F (°C)	Motor Speed	Allowable Functions	Motor Speed Selection			ESP (in. W.C.)									
							0.1	0.2	0.3	0.4	0.5	0.6	0.7	0.8	0.9	1
48090	35 - 65 (19 - 36)	5	Dehumidification High	SW1-5	SW1-6	CFM	1383	1339	1296	1254	1209	1163	1119	1076	1033	989
				OFF	OFF											
			High Stage Cooling	SW1-1	SW1-2	BHP	0.26	0.27	0.28	0.30	0.31	0.32	0.33	0.34	0.35	0.36
				OFF	OFF											
			Heating*	SW2-1	SW2-2	Gas Heat Rise (°F)	48	49	51	53	55	57	59	62	64	NA
				OFF	OFF	Gas Heat Rise (°C)	27	27	28	29	30	32	33	34	36	NA
		6	Dehumidification High	SW1-5	SW1-6	CFM	1550	1511	1473	1434	1399	1362	1319	1278	1238	1202
				ON	OFF											
			High Stage Cooling	SW1-1	SW1-2	BHP	0.36	0.37	0.38	0.39	0.40	0.41	0.42	0.44	0.45	0.46
				ON	OFF											
			Heating	SW2-1	SW2-2	Gas Heat Rise (°F)	43	44	45	47	48	49	51	52	54	56
				ON	OFF	Gas Heat Rise (°C)	24	25	25	26	27	27	28	29	30	31
		7	Dehumidification High	SW1-5	SW1-6	CFM	1676	1638	1604	1567	1532	1497	1460	1420	1383	1345
				OFF	ON											
			High Stage Cooling	SW1-1	SW1-2	BHP	0.43	0.44	0.45	0.47	0.48	0.49	0.50	0.51	0.53	0.54
				OFF	ON											
						Gas Heat Rise (°F)	NA	NA	NA	NA	NA	NA	NA	NA	NA	NA
						Gas Heat Rise (°C)	NA	NA	NA	NA	NA	NA	NA	NA	NA	NA
		8	Dehumidification High	SW1-5	SW1-6	CFM	1733	1697	1662	1628	1593	1606	1571	1536	1499	1464
				ON	ON											
			High Stage Cooling*	SW1-1	SW1-2	BHP	0.47	0.48	0.50	0.51	0.52	0.57	0.58	0.59	0.60	0.62
				ON	ON											
						Gas Heat Rise (°F)	NA	NA	NA	NA	NA	NA	NA	NA	NA	NA
			High Static Cooling	SW2-8		Gas Heat Rise (°C)	NA	NA	NA	NA	NA	NA	NA	NA	NA	NA
				OFF												
		9	High Static Cooling	SW2-8		CFM	1842	1810	1773	1741	1710	1678	1645	1606	1570	1532
				ON		BHP	0.57	0.58	0.60	0.61	0.62	0.64	0.65	0.66	0.67	0.69

Dry Coil Air Delivery** - Horizontal and Downflow Discharge Sizes 24-60 208/230 VAC - 1,3 Phase (Continued)

Unit Size	Heating Rise °F (°C)	Motor Speed	Allowable Functions	Motor Speed Selection		ESP (in. W.C.)										
							0.1	0.2	0.3	0.4	0.5	0.6	0.7	0.8	0.9	1
60090	35 - 65 (19 - 36)	1	Continuous Fan*	SW2-5 OFF	SW2-6 OFF	CFM	923	812	741	677	614	549	494	444	387	338
			Dehumidification Low	SW1-7 OFF	SW1-8 OFF											
			Low Stage Cooling	SW1-3 OFF	SW1-4 OFF	BHP	0.10	0.10	0.11	0.11	0.12	0.13	0.14	0.14	0.15	0.16
		2	Continuous Fan	SW2-5 ON	SW2-6 OFF	CFM	945	885	820	757	696	638	579	527	480	429
			Dehumidification Low	SW1-7 ON	SW1-8 OFF											
			Low Stage Cooling	SW1-3 ON	SW1-4 OFF	BHP	0.11	0.12	0.12	0.13	0.14	0.15	0.16	0.16	0.17	0.18
		3	Continuous Fan	SW2-5 OFF	SW2-6 ON	CFM	1102	1051	999	945	890	837	785	734	681	634
			Dehumidification Low	SW1-7 OFF	SW1-8 ON											
			Low Stage Cooling	SW1-3 OFF	SW1-4 ON	BHP	0.15	0.16	0.17	0.18	0.19	0.20	0.21	0.22	0.23	0.24
		4	Continuous Fan	SW2-5 ON	SW2-6 ON	CFM	1297	1253	1207	1163	1115	1066	1018	974	931	888
			Dehumidification Low	SW1-7 ON	SW1-8 ON											
			Low Stage Cooling*	SW1-3 ON	SW1-4 ON	BHP	0.23	0.24	0.24	0.26	0.27	0.27	0.28	0.29	0.30	0.31

Manufacturer reserves the right to change, at any time, specifications and designs without notice and without obligations.

Dry Coil Air Delivery** - Horizontal and Downflow Discharge Sizes 24-60 208/230 VAC - 1,3 Phase (Continued)

Unit Size	Heating Rise °F (°C)	Motor Speed	Allowable Functions	Motor Speed Selection			ESP (in. W.C.)									
							0.1	0.2	0.3	0.4	0.5	0.6	0.7	0.8	0.9	1
60090	35 - 65 (19 - 36)	5	Dehumidification High	SW1-5	SW1-6	CFM	1383	1339	1296	1254	1209	1163	1119	1076	1033	989
				OFF	OFF											
			High Stage Cooling	SW1-1	SW1-2	BHP	0.26	0.27	0.28	0.30	0.31	0.32	0.33	0.34	0.35	0.36
				OFF	OFF											
			Heating*	SW2-1	SW2-2	Gas Heat Rise (°F)	48	49	51	53	55	57	59	62	64	NA
				OFF	OFF	Gas Heat Rise (°C)	27	27	28	29	30	32	33	34	36	NA
		6	Dehumidification High	SW1-5	SW1-6	CFM	1550	1511	1473	1434	1399	1362	1319	1278	1238	1202
				ON	OFF											
			High Stage Cooling	SW1-1	SW1-2	BHP	0.36	0.37	0.38	0.39	0.40	0.41	0.42	0.44	0.45	0.46
				ON	OFF											
			Heating	SW2-1	SW2-2	Gas Heat Rise (°F)	43	44	45	46	47	49	50	52	53	55
				ON	OFF	Gas Heat Rise (°C)	24	24	25	26	26	27	28	29	30	31
		7	Dehumidification High	SW1-5	SW1-6	CFM	1818	1783	1751	1718	1685	1652	1619	1584	1548	1512
				OFF	ON											
			High Stage Cooling	SW1-1	SW1-2	BHP	0.54	0.55	0.56	0.58	0.59	0.60	0.62	0.63	0.64	0.65
				OFF	ON											
						Gas Heat Rise (°F)	NA	NA	NA	NA	NA	NA	NA	NA	NA	NA
						Gas Heat Rise (°C)	NA	NA	NA	NA	NA	NA	NA	NA	NA	NA
		8	Dehumidification High	SW1-5	SW1-6	CFM	1914	1881	1849	1817	1785	1755	1723	1693	1659	1618
				ON	ON											
			High Stage Cooling	SW1-1	SW1-2	BHP	0.62	0.63	0.65	0.66	0.67	0.69	0.70	0.71	0.73	0.74
				ON	ON											
						Gas Heat Rise (°F)	NA	NA	NA	NA	NA	NA	NA	NA	NA	NA
			High Static Cooling*	SW2-8		Gas Heat Rise (°C)	NA	NA	NA	NA	NA	NA	NA	NA	NA	NA
				OFF												
		9	High Static Cooling	SW2-8		CFM	1966	1933	1903	1872	1842	1811	1782	1751	1718	1619
				ON		BHP	0.67	0.68	0.70	0.71	0.73	0.74	0.75	0.77	0.78	0.74

Shaded areas indicate speed/static combinations that are permitted for dehumidification speed

Notes:
* - Factory Set Function
** - Deduct field-supplied air filter pressure drop and wet coil pressure drop to obtain external static pressure available for ducting
"NA" = Not Allowed for particular heating speed

Wet Coil Pressure Drop (IN. W.C.)

Unit Size	Standard CFM (SCFM)																	
	500	600	700	800	900	1000	1100	1200	1300	1400	1500	1600	1700	1800	1900	2000	2100	2200
24	0.02	0.03	0.04	0.04	0.05	0.06												
36				0.03	0.04	0.05	0.05	0.06	0.07	0.08	0.08	0.09	0.10	0.11				
48						0.03	0.04	0.04	0.05	0.06	0.06	0.07	0.08	0.09	0.10	0.11	0.12	0.13
60						0.03	0.04	0.04	0.05	0.06	0.06	0.07	0.08	0.09	0.10	0.11	0.12	0.13

Economizer with 1-in. Filter Pressure Drop (IN. W.C.)

Filter Size in. (mm)	Cooling Tons	Standard CFM (SCFM)																	
		500	600	700	800	900	1000	1100	1200	1300	1400	1500	1600	1700	1800	1900	2000	2100	2200
600-1400 CFM 12x20x1+12x20x1 (305x508x25+305x508x25)	2.0	0.04	0.05	0.07	0.09	0.14	0.16	0.18	0.25	-	-	-	-	-	-	-	-	-	-
1200-1800 CFM 16x24x1+14x24x1 (406x610x25+356x610x25)	3.0	-	-	-	0.04	0.06	0.07	0.08	0.10	0.11	0.12	0.13	0.14	0.16	0.16	-	-	-	-
1500-2200 CFM 16x24x1+18x24x1 (406x610x25+457x610x25)	4.0	-	-	-	-	-	-	0.08	0.10	0.11	0.13	0.15	0.17	0.18	0.20	0.21	0.22	-	-
1500-2200 CFM 16x24x1+18x24x1 (406x610x25+457x610x25)	5.0	-	-	-	-	-	-	0.08	0.10	0.11	0.13	0.15	0.17	0.18	0.20	0.21	0.22	0.23	0.23

Filter Pressure Drop Table (IN. W.C.)

Filter Size in. (mm)	Cooling Tons	Standard CFM (SCFM)																	
		500	600	700	800	900	1000	1100	1200	1300	1400	1500	1600	1700	1800	1900	2000	2100	2200
600-1400 CFM 12x20x1+12x20x1 (305x508x25+305x508x25)	2.0	0.02	0.03	0.05	0.06	0.08	0.10	0.11	0.13	-	-	-	-	-	-	-	-	-	-
1200-1800 CFM 16x24x1+14x24x1 (406x610x25+356x610x25)	3.0	-	-	-	0.03	0.03	0.04	0.05	0.06	0.07	0.08	0.09	0.09	0.10	0.11	-	-	-	-
1500-2200 CFM 16x24x1+18x24x1 (406x610x25+457x610x25)	4.0	-	-	-	-	-	-	0.02	0.03	0.03	0.04	0.04	0.06	0.08	0.10	0.11	0.13	-	-
1500-2200 CFM 16x24x1+18x24x1 (406x610x25+457x610x25)	5.0	-	-	-	-	-	-	0.02	0.03	0.03	0.04	0.04	0.06	0.08	0.10	0.11	0.13	0.14	0.15

Manufacturer reserves the right to change, at any time, specifications and designs without notice and without obligations.

Typical Piping and Wiring

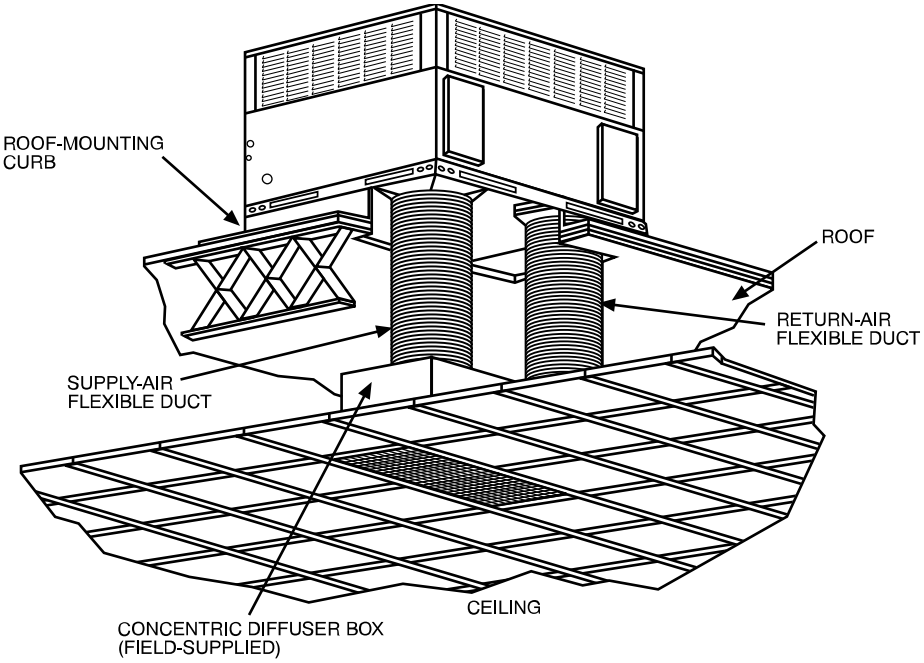

A09233

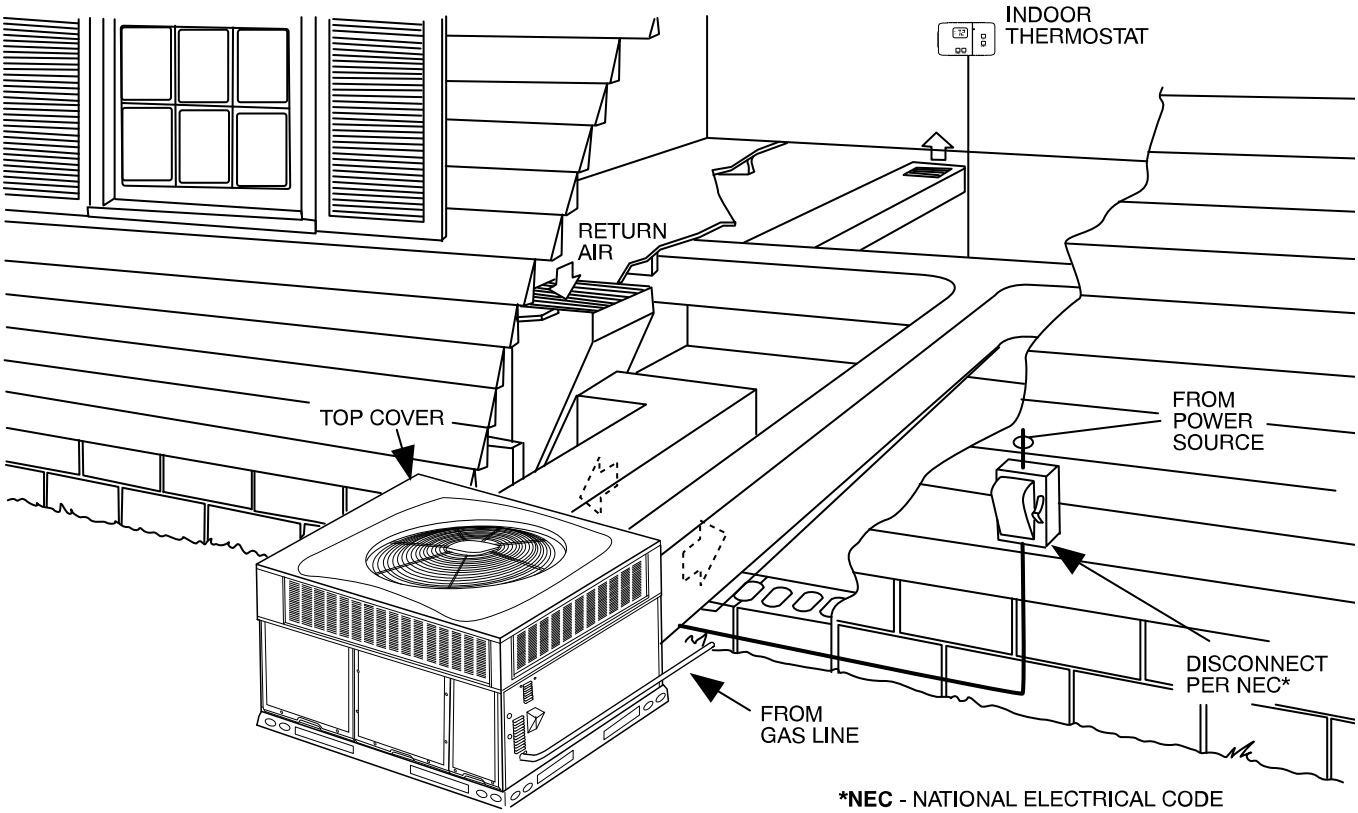

A09234

Application Data

Condensate trap — A 2-in. (50.8 mm) condensate trap must be field supplied.

Ductwork — Secure downflow discharge ductwork to roof curb. For horizontal discharge applications, attach ductwork to unit with flanges.

To convert a unit to downflow discharge — Units are equipped with factory-installed inserts in the down-flow openings. Removal of the inserts is similar to removing an electrical knock-out. Use the duct cover to seal the horizontal discharge openings in the unit. Units installed in horizontal discharge orientation do not require duct covers.

Airflow — Units are draw-thru in the cooling mode and blow-thru in the heating mode.

Maximum cooling airflow — To minimize the possibility of condensate blow-off from the evaporator, airflow through the units should not exceed 450 cfm per ton.

Minimum cooling airflow — Minimum cooling airflow is 350 cfm per ton.

Minimum ambient cooling operation temperature — All standard units have a minimum ambient operating temperature of 40°F (4°C). With accessory low ambient temperature kit, units can operate at temperatures down to 0°F (-17°C).

Minimum temperature — Air entering the heat exchanger in heating mode must be a minimum of 55°F (13°C) continuous and a maximum of 80°F (27°C) continuous.

Electrical Data (Cont)

MODEL	NOMINAL V-PH-HZ	VOLTAGE RANGE		COMPRESSOR		OFM	IFM	IDM	POWER SUPPLY	
		MIN	MAX	RLA	LRA	FLA	FLA	FLA	MCA	MOCP
24040, 24060	208/230-1-60	197	253	10.9	61	0.6	4.1	0.7	18.3	25
36060	208/230-1-60	197	253	15.3	83	1.05	6.1	0.7	26.3	40
36060	208/230-3-60	197	253	11.6	73	1.05	6.1	0.7	21.7	30
48090	208/230-1-60	197	253	21.2	104	1.05	7.6	0.7	35.2	50
48090	208/230-3-60	197	253	14	83.1	1.05	7.6	0.7	26.2	40
60090	208/230-1-60	197	253	28.8	152.9	1.05	7.6	0.7	44.7	60
60090	208/230-3-60	197	253	16.2	110	1.05	7.6	0.7	29	40

LEGEND

FLA - Full Load Amps
IDM - Inducer Motor
IFM - Indoor Fan Motor
LRA -Locked Rotor Amps
MCA - Minimum Circuit Amps
MOCP - Maximum Over Current Protection
OFM - Outdoor Fan Motor
RLA - Rated Load Amps

NOTES:

1. In compliance with NEC (National Electrical Code) requirements for multimotor and combination load equipment (refer to NEC Articles 430 and 440), the overcurrent protective device for the unit shall be Power Supply fuse or circuit breaker.
2. Minimum wire size is based on 60 C copper wire. If other than 60 C wire is used, or if length exceeds wire length in table, determine size from NEC.
3. Unbalanced 3-Phase Supply Voltage
   Never operate a motor where a phase imbalance in supply voltage is greater than 2%. Use the following formula to determine the percentage of voltage imbalance

   % Voltage imbalance

   $$= 100 \times \frac{\text{max voltage deviation from average voltage}}{\text{average voltage}}$$

EXAMPLE: Supply voltage is 230-3-60.

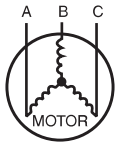

AB = 228 v
BC = 231 v
AC = 227 v

$$\text{Average Voltage} = \frac{228 + 231 + 227}{3} = \frac{686}{3} = 229$$

Determine maximum deviation from average voltage.
(AB) 229 - 228 = 1 v
(BC) 231 - 229 = 2 v
(AC) 229 - 227 = 2 v

Maximum deviation is 2 v.

Determine percent of voltage imbalance

$$\text{\% Voltage Imbalance} = 100 \times \frac{2}{229} = 0.8\%$$

This amount of phase imbalance is satisfactory as it is below the maximum allowable 2%.

IMPORTANT: If the supply voltage phase imbalance is more than 2%, contact your local electric utility company immediately.

Connection Wiring Schematic 208/230-1-60

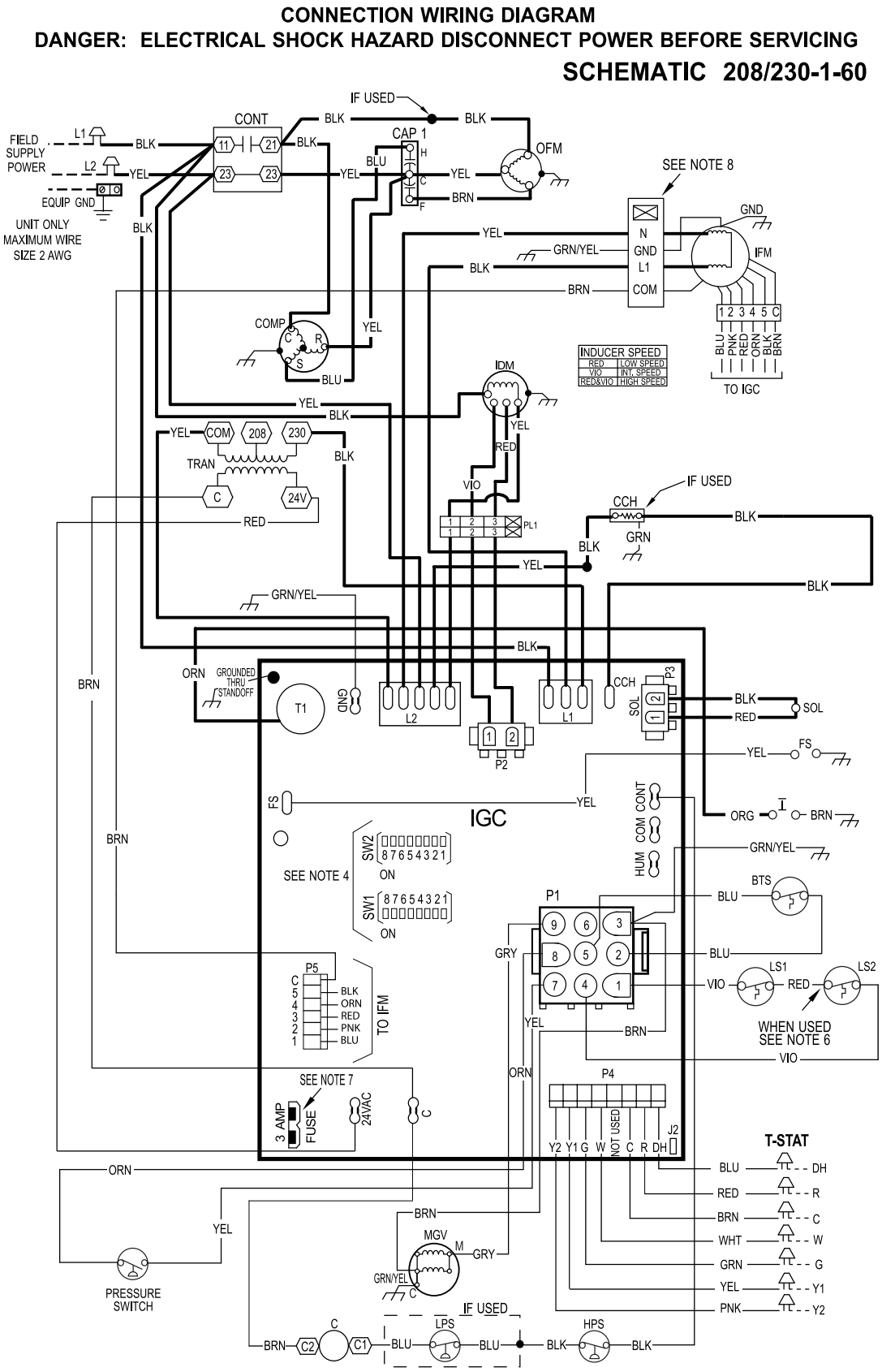

A230036

Ladder Wiring Schematic 208/230-1-60

LADDER WIRING DIAGRAM
DANGER: ELECTRICAL SHOCK HAZARD DISCONNECT POWER BEFORE SERVICING

LEGEND

	FIELD SPLICE	CONT	COMPRESSOR CONTACTOR
	TERMINAL (MARKED)	EQUIP	EQUIPMENT
	TERMINAL (UNMARKED)	FS	FLAME SENSOR
	SPLICE	GND	GROUND
	SPLICE (MARKED)	HPS	HIGH PRESSURE SWITCH
	FACTORY LO VOLTAGE	I	IGNITOR
	FIELD CONTROL WIRING	IDM	INDUCED DRAFT MOTOR
	FIELD POWER WIRING	IFM	INDOOR FAN MOTOR
	ACCESSORY OR OPTIONAL WIRING	IGC	INTEGRATED GAS UNIT CONTROLLER
	FACTORY HI VOLTAGE	LPS	LOW PRESSURE SWITCH
BTS	BURNER THERMAL SWITCH	LS1	PRIMARY LIMIT SWITCH
C	CONTACTOR	LS2	SECONDARY LIMIT SWITCH
CAP1	CAPACITOR, COMP	MGV	MAIN GAS VALVE
CAP2	CAPACITOR, INDUCER (WHEN USED)	OFM	OUTDOOR FAN MOTOR
CCH	CRANKCASE HEATER	OT	QUADRUPLE TERMINAL
CHS	CRANKCASE HEATER SWITCH	PEV	PRESSURE EQUALIZER VALVE (IF USED)
COMP	COMPRESSOR MOTOR	TRAN	TRANSFORMER
		T-STAT	THERMOSTAT
		SOL	COMPRESSOR SOLENOID

1Ø UNIT COMPONENT ARRANGEMENT

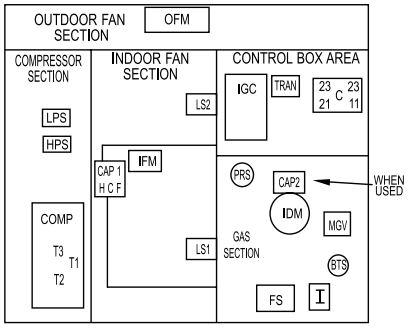

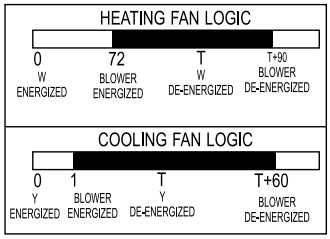

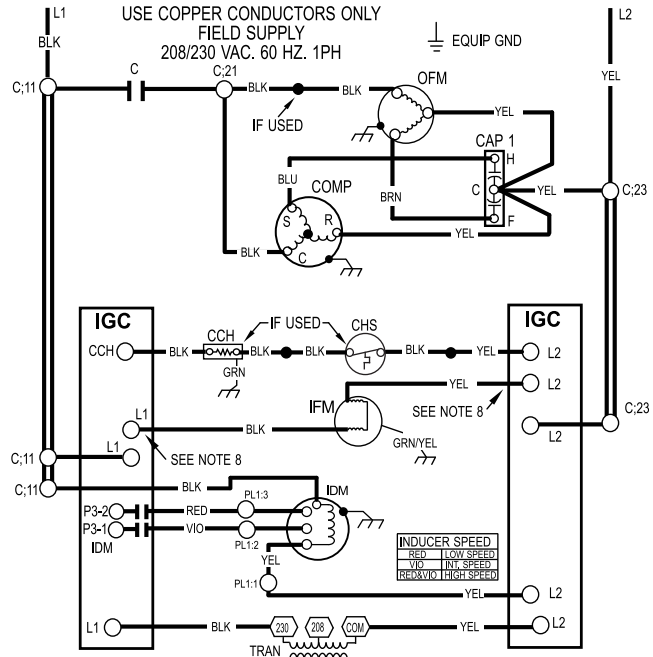

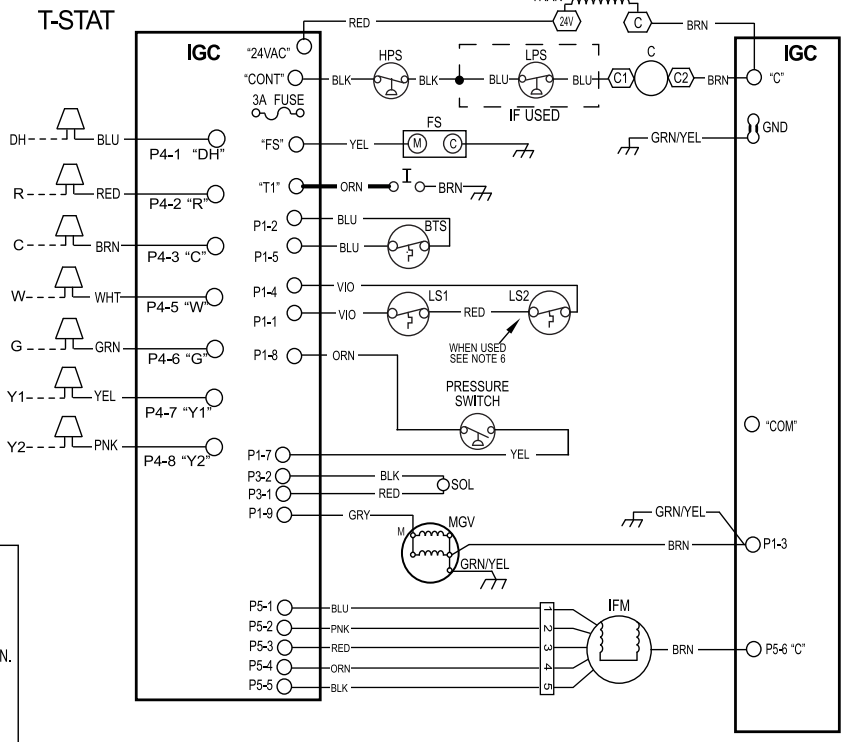

NOTES:

1. IF ANY OF THE ORIGINAL WIRES FURNISHED ARE REPLACED THEY MUST BE REPLACED WITH THE SAME WIRE OR IT'S EQUIVALENT.
2. SEE PRE-SALE LITERATURE FOR THERMOSTATS.
3. USE 75 DEGREES C COPPER CONDUCTORS FOR FIELD INSTALLATION.
4. REFER TO INSTALLATION INSTRUCTIONS FOR CORRECT SPEED SELECTIONS FOR HEATING AND COOLING ON YOUR UNIT.
6. ON SOME MODELS LS1 AND LS2 ARE WIRED IN SERIES. ON OTHER MODELS ONLY LS1 IS USED.
7. THIS FUSE IS MANUFACTURED BY LITTLE FUSE, P/N 287003.
8. DO NOT DISCONNECT PLUG UNDER LOAD.
9. N.E.C. CLASS 2, 24V.
11. INDUCER MOTOR USES A 230V CONTROL SIGNAL.

347820-701 REV. D

347820-701 REV. D

A230037

Connection Wiring Schematic Gas Inputs 40, 60, 90 KBtu/hr 208/230-3-60

CONNECTION WIRING DIAGRAM

DANGER: ELECTRICAL SHOCK HAZARD DISCONNECT POWER BEFORE SERVICING

SCHEMATIC 208/230-3-60

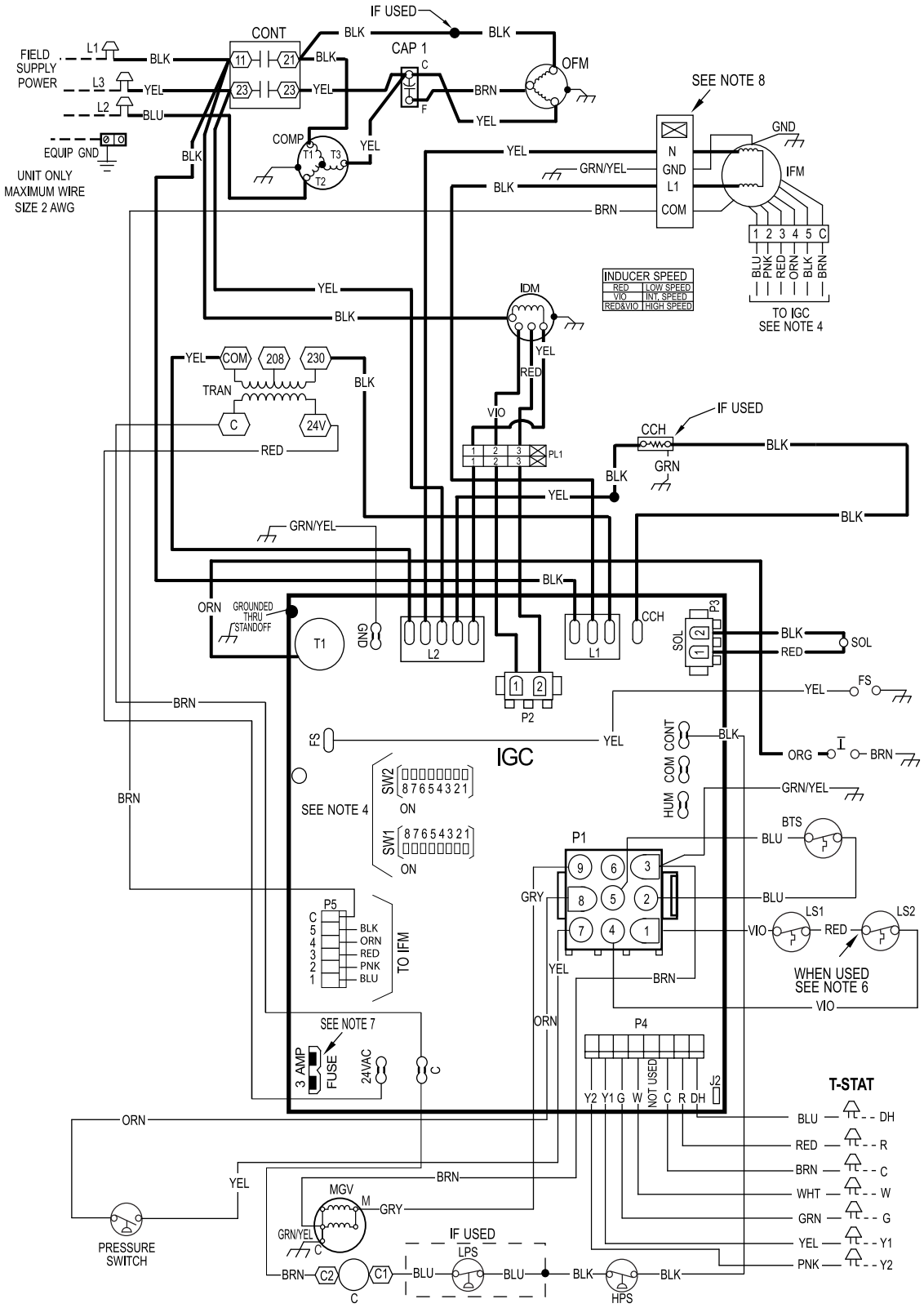

A230038

Ladder Wiring Schematic Gas Inputs 40, 60, 90 KBtu/hr 208/230-3-60

LADDER WIRING DIAGRAM
DANGER: ELECTRICAL SHOCK HAZARD DISCONNECT POWER BEFORE SERVICING

LEGEND

	FIELD SPLICE	EQUIP	EQUIPMENT
	TERMINAL (MARKED)	FS	FLAME SENSOR
	TERMINAL (UNMARKED)	GND	GROUND
	SPLICE	HPS	HIGH PRESSURE SWITCH
	SPLICE (MARKED)	I	IGNITOR
	FACTORY LO VOLTAGE	IDM	INDUCED DRAFT MOTOR
	FIELD CONTROL WIRING	IFM	INDOOR FAN MOTOR
	FIELD POWER WIRING	IGC	INTEGRATED GAS UNIT CONTROLLER
	ACCESSORY OR OPTIONAL WIRING	LPS	LOW PRESSURE SWITCH
	FACTORY HI VOLTAGE	LS1	PRIMARY LIMIT SWITCH
BTS	BURNER THERMAL SWITCH	LS2	SECONDARY LIMIT SWITCH
C	CONTACTOR	MGV	MAIN GAS VALVE
CAP1	CAPACITOR, COMP	OFM	OUTDOOR FAN MOTOR
CAP2	CAPACITOR, INDUCER (WHEN USED)	OT	QUADRUPLE TERMINAL
CCH	CRANKCASE HEATER	TRAN	TRANSFORMER
CHS	CRANKCASE HEATER SWITCH	T-STAT	THERMOSTAT
COMP	COMPRESSOR MOTOR	SOL	COMPRESSOR SOLENOID
CONT	COMPRESSOR CONTACTOR		

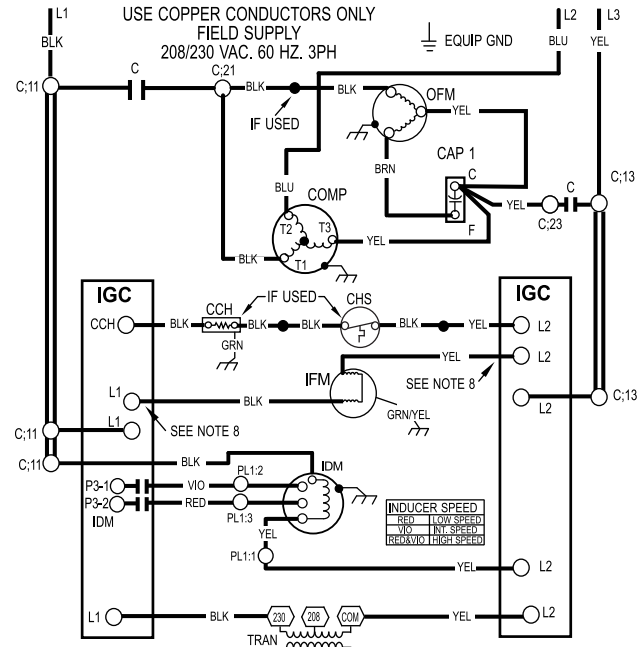

3Ø UNIT COMPONENT ARRANGEMENT

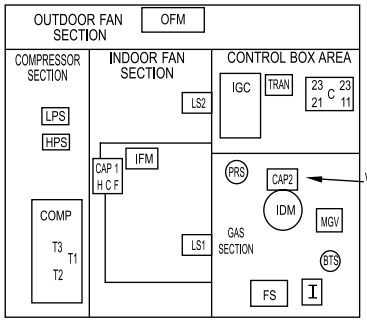

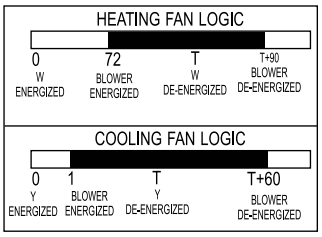

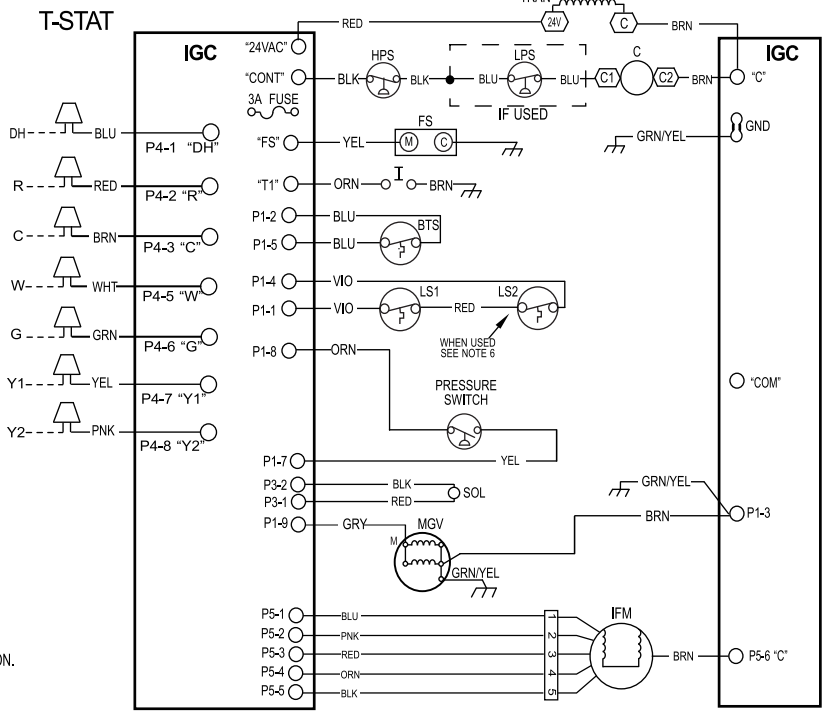

NOTES:

1. IF ANY OF THE ORIGINAL WIRES FURNISHED ARE REPLACED THEY MUST BE REPLACED WITH THE SAME WIRE OR IT'S EQUIVALENT.
2. SEE PRE-SALE LITERATURE FOR THERMOSTATS.
3. USE 75 DEGREES C COPPER CONDUCTORS FOR FIELD INSTALLATION.
4. REFER TO INSTALLATION INSTRUCTIONS FOR CORRECT SPEED SELECTIONS FOR HEATING AND COOLING ON YOUR UNIT.
6. ON SOME MODELS LS1 AND LS2 ARE WIRED IN SERIES. ON OTHER MODELS ONLY LS1 IS USED.
7. THIS FUSE IS MANUFACTURED BY LITTLE FUSE, P/N 287003.
8. DO NOT DISCONNECT PLUG UNDER LOAD.
9. N.E.C. CLASS 2, 24V.
10. INDUCER MOTOR USES A 230V CONTROL SIGNAL.

347821-701 REV. D

347821-701 REV. D

A230039

Controls

Operating Sequence

Heating Sequence of Operation (Ultra Low NOx Single and Three Phase Models)

On a call for heating, terminal W of the thermostat is energized, starting the induced-draft motor for a 30 second pre-purge at intermediate speed. When the pressure switch senses that the induced-draft motor is moving sufficient combustion air, the burner sequence begins. This function is controlled by the integrated gas unit controller (IGC).

After 30 sec of pre-purge is complete, the pressure switch checks for sufficient combustion. Then, the gas valve energizes and the system attempts to ignite with igniter being energized. The igniter energizes for 5 sec and integrated gas controller (IGC) allows system to sense flame for 2 sec at the end of 5 sec of ignition trial. On first successful ignition, system stays at the intermediate inducer speed for 10 sec and gradually ramps up to the high speed for steady-state operation. The system uses the same logic for 2nd ignition trial. If a 3rd or 4th ignition attempt is needed, the inducer speed is decreased to the low speed. On a successful light on the 3rd or 4th attempt, the inducer speed is increased to the intermediate speed for about 10 seconds and then gradually ramps up to the high speed for steady-state operation. In case the 4th attempt fails, the system will lock out for 1 hr. After 1 hr. lock out period, the system starts with normal operating sequence. Once flame is established and proven successfully, indoor (evaporator) fan motor is energized after 30 seconds. When the thermostat is satisfied and W is de-energized, the pre-mix burner will stop firing and the indoor (evaporator) fan motor shuts off after a 90 second time-off delay. Please note that the IGC has the capability to automatically decrease the indoor (evaporator) fan motor "ON" delay and increase the indoor (evaporator) fan motor "OFF" delay in the event of high duct static and/or partially-clogged filter.

Guide Specifications

Packaged Gas Heating/Electric Cooling Units Constant Volume Application

HVAC Guide Specifications

Size Range: **2 to 5 Tons, Nominal Cooling**
40,000 to 90,000 Btuh,
Nominal Heating Input

SYSTEM DESCRIPTION

Outdoor rooftop or ground mounted air conditioner and gas furnace system utilizing a two-stage scroll compressor for cooling duty. Unit shall discharge supply air vertically or horizontally as shown on contract drawings. Outdoor fan/coil section shall have a draw-thru design with vertical discharge for minimum sound levels.

QUALITY ASSURANCE

- Unit shall be rated in accordance with AHRI Standards 210/240 and 270-1995.
- Unit shall be designed in accordance with UL Standard 1995 and ANSI Z 21.47.
- Unit shall be manufactured in a facility registered to ISO 9001 manufacturing quality standard.
- Unit shall be UL listed and c-UL certified as a total package for safety requirements.
- Roof curb shall be designed to conform to NRCA Standards.
- Insulation and adhesives shall meet NFPA 90.1 requirements for flame spread and smoke generation.
- Cabinet insulation shall meet ASHRAE Standard 62.2.

DELIVERY, STORAGE AND HANDLING

Unit shall be stored and handled per manufacturer's recommendations.

Part 2 — Products

EQUIPMENT

General:

Factory-assembled, single-piece, heating and cooling unit. Contained within the enclosure shall be all factory wiring, piping, controls, refrigerant charge with R-410A refrigerant, and special features required prior to field start-up.

Unit Cabinet:

1. Unit cabinet shall be constructed of phosphated, zinc-coated, pre-painted steel capable of with-standing 500 hours in salt spray.
2. Normal service shall be through 3 removable cabinet panels.
3. The unit shall be constructed on a rust proof unit base that has an externally trapped, integrated sloped drain.
4. Evaporator fan compartment top surface shall be insulated with a minimum 1/2-in. (12.7 mm) thick, flexible fiberglass insulation, coated on the air side and retained by adhesive and mechanical means. The evaporator wall sections will be insulated with a minimum semi-rigid foil-faced board capable of being wiped clean. Aluminum foil-faced fiberglass insulation shall be used in the entire indoor air cavity section.
5. Unit shall have a field-supplied condensate trap.

Fans:

1. The evaporator fan shall be a multi-speed, direct-drive, as shown on equipment drawings.
2. Fan wheel shall be made from steel, be double-inlet type with forward curved blades with corrosion resistant finish. Fan wheel shall be dynamically balanced.
3. Condenser fan shall be direct drive propeller type with aluminum blades riveted to corrosion resistant steel spiders, be dynamically balanced, and discharge air vertically.

Compressor:

1. Fully hermetic compressors with factory-installed vibration isolation.
2. Two-stage scroll compressors shall be standard on all units.

Coils:

Aluminum tubes on indoor coil. Copper tubes on outdoor coil.

Heating Section:

1. Induced-draft combustion type with energy saving direct spark ignition system and redundant main gas valve.
2. Induced-draft motors shall provide adequate airflow for combustion.
3. The heat exchangers shall be constructed of stainless steel for corrosion resistance.
4. Burners shall be pre-mixed type.
5. All gas piping and electric power shall enter the unit cabinet at a single location.

Refrigerant Components:

Refrigerant expansion device shall be of the TXV (thermostatic expansion valve) type.

Filters:

Filter section shall consist of field-installed, throwaway, 1-in. (25 mm) thick fiberglass filters of commercially available sizes.

Controls and Safeties:

1. Unit controls shall be complete with a self-contained low voltage control circuit.
2. Compressors shall incorporate a solid-state compressor protector that provides reset capability.

Operating Characteristics:

1. Unit shall be capable of starting and running at 125°F (51°C) ambient outdoor temperature per maximum load criteria of AHRI Standard 210.
2. Compressor with standard controls shall be capable of operation down to 40°F (4°C) ambient outdoor temperature.
3. Units shall be provided with fan time delay to prevent cold air delivery before the heat exchanger warms up.
4. Unit shall be provided with fan time delay after the thermostat is satisfied.

Electrical Requirements:

All unit power wiring shall enter the unit cabinet at a single location.

Motors:

1. Compressor motors shall be of the refrigerant-cooled type with line-break thermal and current overload protection.
2. All fan motors shall have permanently lubricated bearings, and inherent, automatic reset, thermal overload protection.
3. Condenser fan motor shall be totally enclosed.
4. Evaporator Fan Motor to be multi-speed ECM blower motor.

Compressor Protection:

Solid-state control shall protect compressor by preventing "short cycling."

Ultra Low NOx:

Shall provide NOx reduction to meet 14ng/J NOx emissions requirements as shipped from the factory.

Guide Specifications (cont)

O.Special Option/Kits Available:

1. Compressor Start Kit (single phase units only):
   Shall provide additional starting torque for single-phase compressors.
2. Corporate Thermostat:
   To provide for one-stage heating and cooling in addition manual or automatic changeover and indoor fan control.
3. Crankcase Heater Kit:
   Shall provide anti-floodback protection for low-load cooling applications.
4. Economizer for two-stage operation:
   (Horizontal and Vertical with Jade Honeywell W7220 controller, Honeywell communicating actuator, and dry bulb sensor. (Contact MicroMetl Customer Service at 1-800-662-4822 to order.)

NOTE: The enhanced dehumidification feature on high stage cooling does not support use of an economizer.

   a. Economizer controls capable of providing free cooling using outside air.
   b. Equipped with low leakage dampers not to exceed 3% leakage, at 1.0 IN. W.C. pressure differential.
   c. Spring return motor shuts off outdoor damper on power failure.

5. Filter Rack Kit:
   Shall provide filter mounting for downflow applications. Offered as a field installed accessory.
6. Flat Roof Curb Kit:
   Curbs shall have seal strip and a wood nailer for flashing and shall be installed per manufacturer's instructions.
7. Flue Discharge Deflector Kit
   Directs flue gas exhaust; 90 degrees upward from current discharge.
8. Low Ambient Package Kit:
   Shall consist of a solid-state control and condenser coil temperature sensor for controlling condenser-fan motor operation, which shall allow unit to operate down to 0°F (-18°C) outdoor ambient temperature when properly installed.
9. Manual Outdoor Air Damper Kit:
   Package shall consist of damper, birdscreen, and rainhood which can be preset to admit outdoor air for year-round ventilation.
10. Square-To-Round Duct Transitions Kit (24-48 models):
    Shall have the ability to convert the supply and return openings from rectangular to round.

Training

My Learning Center is your central location for professional residential HVAC training resources that help strengthen careers and businesses. We believe in providing high quality learning experiences both online and in the classroom.

Access My Learning Center with your HVACpartners credentials at www.mlctraining.com. Please contact us a mylearning@carrier.com with questions.

© 2023 Carrier. All rights reserved.

Manufacturer reserves the right to change, at any time, specifications and designs without notice and without obligations.