987MA
EVOLUTION® MODULATING
4-WAY MULTIPOSE, VARIABLE SPEED
CONDENSING GAS FURNACE, SERIES A

bryant®

Product Data

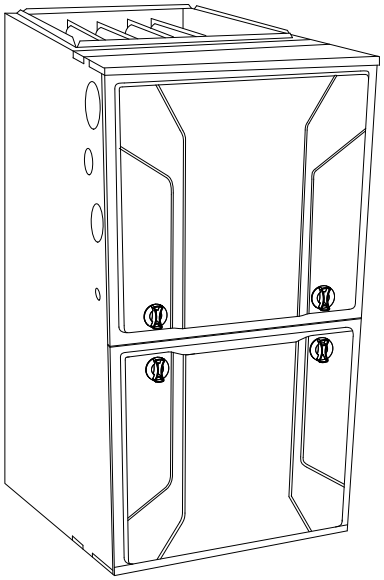

A11264

The 987MA Multipoise Variable-Speed Condensing Gas Furnace features the modulating Evolution® System. The Perfect Heat® Technology modulating gas system is at the heart of the comfort provided by this furnace, along with the Perfect ECM™ full-featured variable-speed communicating blower motor, and variable-speed inducer motor. With an Annual Fuel Utilization Efficiency (AFUE) of up to 98.3%, the Evolution modulating gas furnace provides exceptional savings as well. This Evolution Gas Furnace also features 4-way multipoise installation flexibility, and is available in six model sizes. The 987MA can be vented for direct vent/two-pipe, ventilated combustion air, or single pipe applications. A Bryant Evolution Control and Evolution Air Conditioner or Heat Pump, can be used to form a complete Evolution System. All units meet California Air Quality Management District emission requirements. All sizes are design certified in Canada.

STANDARD FEATURES

- Evolution System; compatible with **single- and multi-zone** Evolution systems.
- Evolution Features—match with the Evolution Control for Evolution System benefits.
- All sizes meet ENERGY STAR® Version 4.0 criteria for gas furnaces: 95+AFUE; AMACF electrical rating; 2% or less cabinet airflow leakage.
- Quiet operation. Compare for yourself at HVACpartners.com.
- Ideal height 35” (889 mm) cabinet: short enough for taller coils, but still allows enough room for service.
- Silicon Nitride Perfect Light™ Hot Surface Igniter.
- SmartEvap™ technology helps control humidity levels in the home when used with a compatible humidity control system.
- FanOn Plus™ technology allows control of continuous fan speed from a compatible thermostat.
- External Media Filter Cabinet included.
- 4-way multipoise design for upflow, downflow or horizontal installation with unique vent elbow and optional through-the-cabinet downflow venting capability.
- Full-featured variable-speed communicating blower motor, variable-speed inducer motor, and modulating gas valve.
- Aluminized-steel primary heat exchanger.
- Stainless-steel condensing secondary heat exchanger.
- Propane convertible (see Accessory list).
- Factory-configured ready for upflow applications.
- Fully-insulated casing including blower section.
- Convenient Air Purifier and Humidifier connections.
- Direct-vent/sealed combustion or ventilated combustion air.
- Installation flexibility: sidewall or vertical vent.
- Residential installations may be eligible for consumer financing through the Retail Credit Program.
- Variable-Speed blower motor, variable-speed inducer motor, and modulating gas valve.
- Self-diagnostics and extended diagnostic data through the Advanced Product Monitor (APM) accessory or Evolution User Interface.
- Adjustable blower speed for cooling, continuous fan, and dehumidification.
- Certified to leak 2% or less of nominal air conditioning CFM delivered when pressurized to 1-in. water column with all present air inlets, air outlets, and condensate drain port(s) sealed.

LIMITED WARRANTY*

- 10 year parts and lifetime heat exchanger limited warranty to the original purchaser upon timely registration.
- Limited warranty period is five years for parts and twenty years for the heat exchanger if not registered within 90 days of installation.†

* For owner occupied, residential applications.

†Jurisdictions where warranty benefits cannot be conditioned on registration will receive registered limited warranty benefits.

EVOLUTION™ SYSTEM

Perfect Humidity™

ENERGY STAR

DESIGN CERTIFIED®

CERTIFIED®

AHRI CERTIFIED™ www.ahridirectory.org

Use of the AHRI Certified TM Mark indicates a manufacturer’s participation in the program. For verification of certification for individual products, go to www.ahridirectory.org.

Certified System™ ISO 9001 OMI-SAI Global

Always Ask For FACTORY AUTHORIZED PARTS

SAP ORDERING NO.	CASING DIMENSIONS (IN.)			RATED HEATING OUTPUT† (BTUH)			HEATING AIRFLOW			COOLING CFM @ 0.5 ESP	MOTOR HP (VARIABLE SPEED)	MEDIA CABINET SUPPLIED (IN.)	APPROX. SHIP WT (LB)
	H	D	W	Maximum	Minimum	AFUE	CFM‡ (Minimum Heating)	CFM (Maximum Heating)	Rated Heating ESP @ Maximum				
987MA42060V17	35	29.5	17.5	59,000	24,000	97.0%	415	1075	0.12	510 - 1335	1/2	16	154
987MA60060V21	35	29.5	21.0	60,000	24,000	98.3%	555	1085	0.12	510 - 1905	1	20	159
987MA42080V17	35	29.5	17.5	78,000	31,000	97.0%	620	1500	0.15	490 - 1375	1/2	16	164
987MA60080V21	35	29.5	21.0	78,000	31,000	97.0%	620	1345	0.15	750 - 1945	1	20	169
987MA66100V21	35	29.5	21.0	98,000	39,000	97.0%	725	1575	0.20	715 - 2160	1	20	179
987MA66120V24	35	29.5	24.5	117,000	47,000	97.0%	900	1820	0.20	885 - 2185	1	24	203

†Capacity in accordance with DOE test procedures. Ratings are position dependent. See rating plate.

‡Minimum heat CFM when low–heat rise adjustment switch (SW 1–3) and comfort/efficiency adjustment switch (SW1–4) on control center are OFF.

ESP – External Static Pressure

987MA

FEATURES AND BENEFITS

Fully Modulating Gas Valve — When paired with the Evolution® control, this furnace improves comfort by adjusting heating output in 1% increments from 40% to 100% capacity to meet the heating needs of the home. Precision begins with a stepper motor to adjust manifold pressures. Stepper motors are used in electronic devices, such as computer disc drives, which require precise mechanical positioning. The precision of the stepper motor, combined with our unique two-point calibration, allows the modulating furnace to accurately control and directly deliver the right amount of gas to the burners every time.

Perfect Humidity® Technology —The Perfect Humidity system actively controls both temperature and humidity in the home to provide the best comfort all year long. Other systems depend on heating or cooling demand to manage the moisture in the air. But, Perfect Humidity gives the homeowner the right amount of humidity day and night, even in mild weather. No other manufacturer can do this! Perfect Humidity saves energy, too. By keeping humidity under control, the homeowner can set their thermostat lower to stay comfortable and save energy.

SmartEvap™ Technology — When paired with a compatible thermostat, this dehumidification feature overrides the cooling blower off-delay when there is a call for dehumidification. By deactivating the blower off-delay, SmartEvap technology prevents condensate that remains on the coil after a dehumidification cycle from re-humidifying throughout the home. This results in reduced humidity and a more comfortable indoor environment for the homeowner.

Unlike competitive systems, SmartEvap technology only overrides the cooling when humidity control is needed. Once humidity is back in control, SmartEvap re-enables the energy-saving cooling blower off-delay.

Fan On Plus™ Technology — Sometimes the constant fan setting on a standard furnace system can actually reduce homeowner comfort by providing too much or too little air! Fan On Plus technology improves comfort all year long by allowing the homeowner to select the continuous fan speed of their choice using a compatible thermostat.

Power Heat™ Igniter — Bryant's unique SiN igniter is not only physically robust but it is also electrically robust. It is capable of running at line voltage and does not require complex voltage regulators as do other brands. This unique feature further enhances the gas furnace reliability and continues Bryant's tradition of technology leadership and innovation in providing a reliable and durable product.

Full-Featured, Communicating, Variable Speed Motors — Our Perfect ECM™ (Electronically Commutated Motor) provides variable-speed operation to optimize comfort levels in the home year round; features such as passive/active dehumidification, ramping profiles, constant air flow and quiet operation. They can provide cooling match enhancements to increase the effective SEER of select Bryant air conditioner or heat pump system, and feature the highest efficiency of all indoor fan motors.

Reliable Heat Exchanger Design — The aluminized steel, clamshell primary heat exchanger was reengineered to achieve greater efficiency out of a smaller size. The first two passes of the heat exchanger are based on the current 80% product, a design with more than ten years of field-proven performance and success. These innovations, paired with the continuation of a crimped, no-weld seam create an efficient, robust design for this essential component.

The condensing heat exchanger, a stainless steel fin and tube design, is positioned in the furnace to extract additional heat. Stainless steel coupling box componentry between heat exchangers has exceptional corrosion resistance in both natural gas and propane applications.

Media Filter Cabinet — Enhanced indoor air quality in the home is made easier with our media filter cabinet—a standard accessory on all deluxe furnaces. When installed as a part of the system, this cabinet allows for easy and convenient addition of a Bryant high efficiency air filter.

4-Way Multipoise Design — One model for all applications – there is no need to stock special downflow or horizontal models when one unit will do it all. The new heat exchanger design allows these units to achieve the certified AFUE in all positions.

Direct Venting or Optional Ventilated Combustion Air — This furnace can be installed as a 2-pipe (Direct Vent) furnace or as an optional ventilated combustion air application. This provides added flexibility to meet diverse installation needs.

Sealed Combustion System —This furnace brings in combustion air from outside the furnace, which results in especially quiet operation. By sealing the entire combustion vestibule, the entire furnace can be made quieter, not just the burners.

Insulated Casing — Foil-faced insulation in heat exchanger section of the casing minimizes heat loss. The acoustical insulation in the blower compartment reduces air and motor noise for quiet operation.

Monoport Burners — The burners are specially designed and finely tuned for smooth, quiet combustion and economical operation.

Bottom Closure — Factory-installed for side return; easily removable for bottom return. The multi-use bottom closure can also serve for roll-out protection in horizontal applications, and act as the bottom closure for the optional return air base accessory.

Blower Access Panel Switch — Automatically shuts off 115-v power to furnace whenever blower access panel is opened.

Quality Registration — Our furnaces are engineered and manufactured under an ISO 9001 registered quality system.

Certifications — This furnace is CSA (AGA and CGA) design certified for use with natural and propane gases. The furnace is factory-shipped for use with natural gas. A CSA listed gas conversion kit is required to convert furnace for use with propane gas. The efficiency is GAMA efficiency rating certified. This furnace meets California Air Quality Management District emission requirements.

SPECIFICATIONS

Heating Capacity and Efficiency			42060	60060	42080	60080	66100	66120
Input	Maximum Heat	(BTUH)	60,000	60,600	80,000	80,000	100,000	120,000
	Intermediate Heat	(BTUH)	39,000	39,000	52,000	52,000	65,000	78,000
	Minimum Heat	(BTUH)	24,000	24,000	32,000	32,000	40,000	48,000
Output	Maximum Heat	(BTUH)	59,000	60,000	78,000	78,000	98,000	117,000
	Intermediate Heat	(BTUH)	38,000	39,000	51,000	51,000	64,000	76,000
	Minimum Heat	(BTUH)	24,000	24,000	31,000	31,000	39,000	47,000
Efficiency		AFUE % (ICS)	97.0	98.3	97.0	97.0	97.0	97.0
Certified Temperature Rise Range °F (°C)		Maximum Heat	35 - 65 (19 - 36)	35 - 65 (19 - 36)	40 - 70 (22 - 39)	40 - 70 (22 - 39)	45 - 75 (25 - 42)	45 - 75 (25 - 42)
		Intermediate Heat	50 - 80 (28 - 44)	40 - 70 (22 - 39)	50 - 80 (28 - 44)	50 - 80 (28 - 44)	50 - 80 (28 - 44)	50 - 80 (28 - 44)
		Minimum Heat	35 - 65 (19 - 36)	25 - 55 (14-31)	35 - 65 (19 - 36)	35 - 65 (19 - 36)	35 - 65 (19 - 36)	35 - 65 (19 - 36)

Airflow Capacity and Blower Data		42060	60060	42080	60080	66100	66120
Certified External Static Pressure (in. w.c.)	Heating	0.12	0.12	0.15	0.15	0.20	0.20
	Cooling	0.5	0.5	0.5	0.5	0.5	0.5
Airflow Delivery @ Rated ESP (CFM)	Maximum Heat	1075	1080	1500	1345	1575	1820
	Intermediate Heat	530	690	750	795	955	1100
	Minimum Heat	415	555	620	595	745	900
	Cooling	1335	1905	1375	1945	2160	2185
Cooling Capacity (tons) @ 400, 350 CFM/ton	CFM/ton	3	4.5	3.5	4.5	5.5	5.5
	CFM/ton	3.5	5.5	4	5.5	6	6
Direct-Drive Motor Type		Electronically Commutated Motor (ECM)					
Direct-Drive Motor HP		1/2	1	1/2	1	1	1
Motor Full Load Amps		7.7	12.8	7.7	12.8	12.8	12.8
RPM Range		300 - 1300					
Speed Selections		Variable (Communicating)					
Blower Wheel Dia x Width	in.	11 x 8	11 x 10	11 x 8	11 x 10	11 x 10	11 x 11
Air Filtration System		Factory Supplied Media Cabinet Field Supplied Filter					
Filter Used for Certified Watt Data		KGAWF1306UFR	KGAWF1406UFR	KGAWF1306UFR	KGAWF1406UFR		KGAWF1506UFR

Electrical Data		42060	60060	42080	60080	66100	66120
Input Voltage	Volts-Hertz-Phase	115-60-1					
Operating Voltage Range	Min-Max	104 -127					
Maximum Input Amps	Amps	9.7	14.8	9.7	14.8	14.8	14.8
Unit Ampacity	Amps	12.7	19.1	12.7	19.1	19.1	19.1
Minimum Wire Size	AWG	14	12	14	12	12	12
Maximum Wire Length @ Minimum Wire Size	Feet	29	30	29	30	30	30
	(M)	(8.8)	(9.1)	(8.8)	(9.1)	(9.1)	(9.1)
Maximum Fuse/Ckt Bkr (Time-Delay Type Recommended)	Amps	15	20	15	20	20	20
Transformer Capacity (24vac output)		40VA					
External Control Power Available	Heating	27.9 VA					
	Cooling	34.6 VA					

Controls		42060	60060	42080	60080	66100	66120
Gas Connection Size		1/2" - NPT					
Burners (Monoport)		3	3	4	4	5	6
Gas Valve (Redundant)	Manufacturer	White Rogers					
Minimum Inlet Gas pressure (in. wc)		4.5					
Maximum Inlet Gas pressure (in. wc)		13.6					
Gas Conversion Kit - Natural to Propane		KGANP5201VSP					
Gas Conversion Kit - Propane to Natural		KGAPN4401VSP					
Manufactured (Mobile) Home Kit		*not approved for MH use*					
Ignition Device		Silicon Nitride					

SPECIFICATIONS (CONTINUED)

Controls	42060	60060	42080	60080	66100	66120
Limit Control	180	160	170	200	180	160
Heating Blower Control (Heating Off-Delay)	Adjustable: 90, 120, 150, 180 seconds					
Cooling Blower Control (Time Delay Relay)	90 seconds					
Communication System	Evolution, Evolution Zoning					
Thermostat Connections	R, W/W1, W2 Y/Y2, Y1, G, Com 24V, DHUM					
Accessory Connections	EAC (115vac); HUM (24vac); 1-stg AC (via Y/Y2)					

MODEL NUMBER NOMENCLATURE

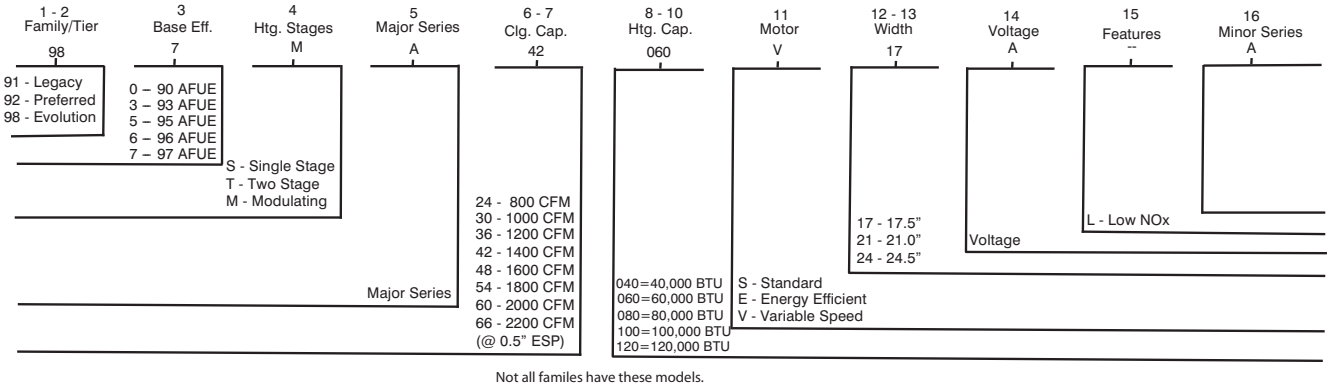

Not all familes have these models.

A11162

FURNACE COMPONENTS

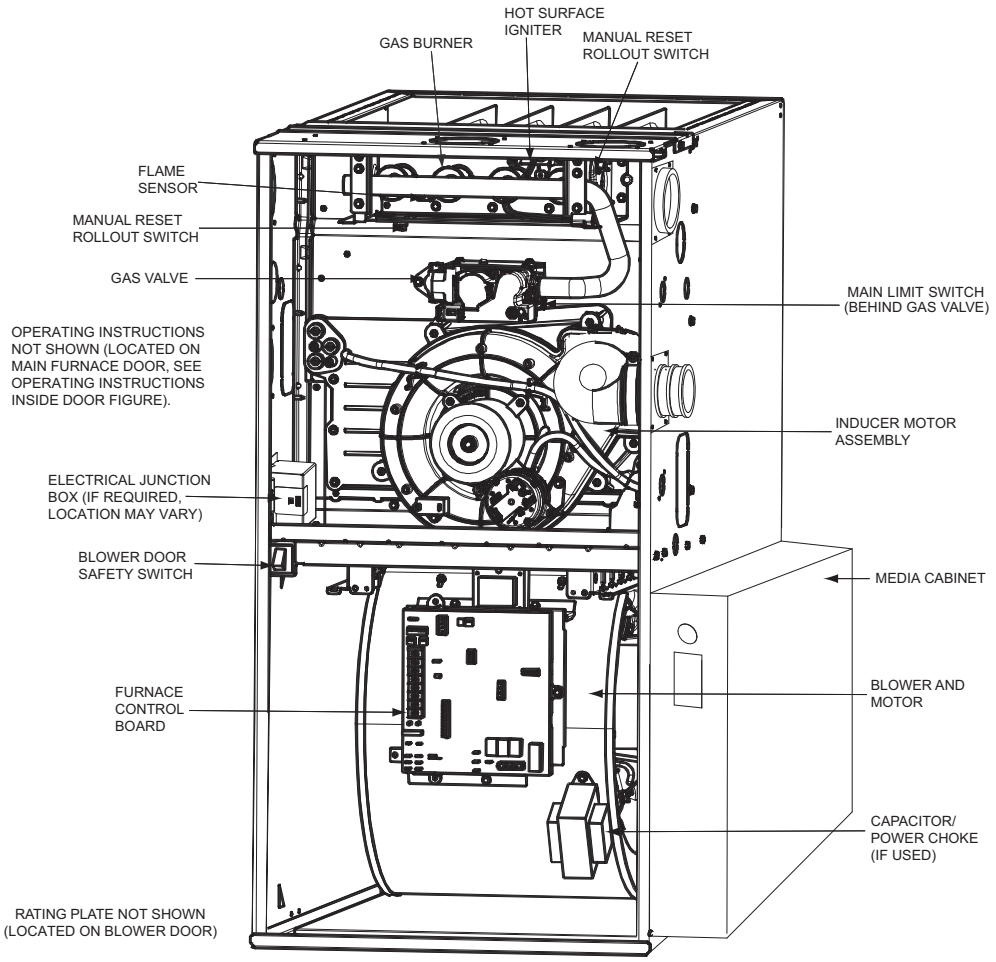

REPRESENTATIVE DRAWING ONLY, SOME MODELS MAY VARY IN APPEARANCE.

A11408

ACCESSORIES

Venting Accessories		Part Number	Used With	Notes
Vent Kit - Through the Cabinet		KGADC0101BVC	All	1
Vent Terminal - Concentric	2-in.	KGAVT0701CVT	See Venting Tables	1
	3-in.	KGAVT0801CVT	See Venting Tables	1
Vent Terminal Bracket	2-in.	KGAVT0101BRA	See Venting Tables	1, 2
	3-in.	KGAVT0201BRA	See Venting Tables	1, 2

Condensate Drainage Accessories	Part Number	Used With	Notes
Freeze Protect Kit - Heat Patch for Drain Trap	KGAHT0201CFP	All	7
Freeze Protect Kit - Heat Tape	KGAHT0101CFP	All	-
CPVC to PVC Drain Adapter - 1/2-in. CPVC to 3/4-in. PVC	KGAAD0110PVC	All	-
Horizontal Trap Grommet for Direct Vent Applications	KGACK0101HCK	All DV Horizontal	-
Condensate Neutralizer Kit	P908-0001	All	6

Ductwork Adapter Accessories		Part Number	Used With	Notes
Furnace Base Kit for Combustible Floors		KGASB0201ALL	All	-
Coil Adapters Kits - Painted	No Offset	KGADA0101ALL	All	-
	Single Offsett	KGADA0201ALL	All	-
	Double Offset	KGADA0301ALL	All	-
Return Air Base (Upflow applications) - Painted	17.5-in. wide	KGARP0301B17	17.5" Wide Furnaces	7
	21-in. wide	KGARP0301B21	21" Wide Furnaces	7
	24.5-in. wide	KGARP0301B24	24.5" Wide Furnaces	7
IAQ Device Duct Adapters (side return) - Painted	20-in IAQ to 16-in side return	KGAAD0101MEC	20"x25" IAQ Devices	7
	24-in IAQ to 16-in side return	KGAAD0201MEC	24"x25" IAQ Devices	7

Gas Conversion Accessories		Part Number	Used With	Notes
Gas Conversion Kit - Nat to LP; Var-spd Products		KGANP5201VSP	All	-
Gas Conversion Kit - LP to Nat; Var-spd Products		KGAPN4401VSP	All	-
Gas Orifice Kit	#42 Natural Gas	KGAHA0150N42	All	4, 6
	#43 Natural Gas	KGAHA0250N43	All	4, 6
	#44 Natural Gas	KGAHA0350N44	All	4
	#45 Natural Gas	KGAHA0450N45	All	4
	#46 Natural Gas	KGAHA0550N46	All	4
	#47 Natural Gas	KGAHA1550N47	All	4
	#48 Natural Gas	KGAHA1650N48	All	4
	#54 LP	KGAHA0650P54	All	4, 6
	#55 LP	KGAHA0750P55	All	4
	#56 LP	KGAHA0850P56	All	4, 6
	1.25 mm LP	KGAHA5750125	All	4, 6
	1.30 mm LP	KGAHA5750130	All	4, 6

Control Accessories	Part Number	Used With	Notes
ECM Motor Simulator Kit	KGASD0301FMS	All	-
Advanced Product Monitor - APM	KGASD0301APM	All	-
Evolution™ Control User Interface	SYSTXBBUID01-D	All	-
Evolution™ Control Zoning User Interface	SYSTXBBUIZ01-D	All	-

IAQ Accessories		Part Number	Used With	Notes
Filter Pack (6 pack) - Washable	16 x 25 x 1	KGAWF1306UFR	All	5
	24 x 25 x 1	KGAWF1506UFR	All	5
EZ-Flex Filter	16-in.	EXPXXFIL0016	EZXCAB--1016	3, 5
	20-in.	EXPXXFIL0020	EZXCAB--1020	3, 5
	24-in.	EXPXXFIL0024	EZXCAB--1024	3, 5
EZ-Flex Filter with End Caps	16-in.	EXPXXUNV0016	EZXCAB--1016	3, 5
	20-in.	EXPXXUNV0020	EZXCAB--1020	3, 5
	24-in.	EXPXXUNV0024	EZXCAB--1024	3, 5
Cartridge Media Filter	16-in.	FILXXCAR0016	FILCABXL1016	3, 5
	20-in.	FILXXCAR0020	FILCABXL1020	3, 5
	24.in.	FILXXCAR0024	FILCABXL2024	3, 5
Bryant Perfect Air Purifier	16 x 25	GAPAAXBB1625	Up to 1600 CFM	5
	20 x 25	GAPAAXBB2025	Up to 2000 CFM	5
Bryant Perfect Air Purifier Replacement Filter	16 x 25	GAPBBCAR1625	GAPAAXCC1625-A08	5
	20 x 25	GAPBBCAR2025	GAPAAXCC2025-A08	5
Bryant Preferred Air Purifier	16 x 25	PGAPXX1625	Up to 1600 CFM	5, 7
	20 x 25	PGAPXX2025	Up to 2000 CFM	5, 7
Bryant Preferred Air Purifier Repl. Filter	16 x 25	PGAPAXXCAR1625	GAPAAXBB1625	5, 7
	20 x 25	PGAPAXXCAR2025	GAPAAXBB2025	5, 7

Notes:

1. CSA requires that a termination kit be used. See latest PD for pipe and kit size selection. The qualified installer or agency must use only factory-authorized kits when modifying these furnaces.
2. Not for use with Concentric Vent Termination Kits.
3. Last 2 digits of Part Number indicate filter size.
4. Last 2 digits of Part Number indicate orifice size.
5. Choose IAQ/filter assembly appropriate for the designed system airflow and static pressure. Use optional IAQ Device Duct Adapters as required.
6. Available from Replacement Components group.
7. Kit coming soon. Expected availability 2Q2012.

AIR DELIVERY - CFM

Cooling[4] and Heating Air Delivery - CFM (Bottom Return[5] With Filter)

(SW1-5 and SW4-3 set to OFF, except as indicated. See notes 1 and 2)

987MA

Unit Size	Clg/CF Switch Settings			External Static Pressure (ESP)									
	SWx-3	SWx-2	SWx-1	0.1	0.2	0.3	0.4	0.5	0.6	0.7	0.8	0.9	1.0
42060													
Clg Default:	OFF	OFF	OFF	1060	1070	1080	1080	1075	1065	1050	1035	1025	1010
CF Default:	OFF	OFF	OFF	545	530	520	525	510	See note 4				
Cooling (SW2) Cont Fan (SW3)	OFF	OFF	ON	545	530	520	525	510	See note 4				
	OFF	ON	OFF	710	710	710	695	690	See note 4				
	OFF	ON	ON	875	880	890	895	895	890	885	880	870	855
	ON	OFF	OFF	1060	1070	1080	1080	1075	1065	1050	1035	1025	1010
	ON	OFF	ON	1235	1240	1250	1255	1255	1250	1230	1190	1155	1115
	ON	ON	OFF	1235	1240	1250	1255	1255	1250	1230	1190	1155	1115
	ON	ON	ON	1235	1240	1250	1255	1255	1250	1230	1190	1155	1115
Clg SW2:	Maximum Clg Airflow [2]			1425	1425	1405	1370	1335	1300	1260	1225	1190	1155
Heating (SW1)	Maximum Heat Airflow [3]			1075	1085	1095	1095	1090	1080	1065	1050	1035	1020
	Intermediate Heat Airflow [3]			535	515	505	515	495	See note 4				
	Minimum Heat Airflow [3]			420	410	415	400	380	See note 4				

Unit Size	Clg/CF Switch Settings			External Static Pressure (ESP)									
	SWx-3	SWx-2	SWx-1	0.1	0.2	0.3	0.4	0.5	0.6	0.7	0.8	0.9	1.0
60060													
Clg Default:	OFF	OFF	OFF	1735	1735	1725	1715	1700	1685	1665	1650	1625	1605
CF Default:	OFF	OFF	OFF	545	530	520	525	510	See note 4				
Cooling (SW2) Cont Fan (SW3)	OFF	OFF	ON	540	525	525	520	540	See note 4				
	OFF	ON	OFF	680	725	725	720	720	See note 4				
	OFF	ON	ON	925	915	910	895	900	890	875	865	860	855
	ON	OFF	OFF	1070	1075	1080	1070	1080	1075	1055	1045	1030	1020
	ON	OFF	ON	1215	1245	1235	1220	1220	1210	1200	1195	1185	1175
	ON	ON	OFF	1380	1385	1395	1390	1395	1390	1380	1365	1355	1340
	ON	ON	ON	1735	1735	1725	1715	1700	1685	1665	1650	1625	1605
Clg SW2:	Maximum Clg Airflow [2]			1955	1950	1940	1925	1905	1885	1855	1815	1745	1685
Heating (SW1)	Maximum Heat Airflow [3]			1080	1085	1095	1090	1095	1085	1070	1055	1045	1030
	Intermediate Heat Airflow [3]			685	725	730	725	730	See note 4				
	Minimum Heat Airflow [3]			560	555	555	550	565	See note 4				

Unit Size	Clg/CF Switch Settings			External Static Pressure (ESP)									
	SWx-3	SWx-2	SWx-1	0.1	0.2	0.3	0.4	0.5	0.6	0.7	0.8	0.9	1.0
42080													
Clg Default:	OFF	OFF	OFF	1055	1065	1080	1075	1065	1050	1045	1035	1025	1005
CF Default:	OFF	OFF	OFF	520	505	505	495	490	See note 4				
Cooling (SW2) Cont Fan (SW3)	OFF	OFF	ON	520	505	505	495	490	See note 4				
	OFF	ON	OFF	665	685	680	660	665	See note 4				
	OFF	ON	ON	885	895	905	900	900	895	885	875	860	845
	ON	OFF	OFF	1055	1065	1080	1075	1065	1050	1045	1035	1025	1005
	ON	OFF	ON	1245	1245	1255	1255	1260	1255	1250	1235	1220	1185
	ON	ON	OFF	1245	1245	1255	1255	1260	1255	1250	1235	1220	1185
	ON	ON	ON	1245	1245	1255	1255	1260	1255	1250	1235	1220	1185
Clg SW2:	Maximum Clg Airflow [2]			1520	1485	1450	1415	1375	1335	1300	1265	1225	1190
Heating (SW1)	Maximum Heat Airflow [3]			1520	1485	1450	1415	1375	1335	1300	1265	1225	1190
	Intermediate Heat Airflow [3]			755	745	755	755	765	See note 4				
	Minimum Heat Airflow [3]			620	625	630	620	610	See note 4				

AIR DELIVERY - CFM (CONTINUED)

Cooling[4] and Heating Air Delivery - CFM (Bottom Return[5] With Filter)

(SW1-5 and SW4-3 set to OFF, except as indicated. See notes 1 and 2)

Unit Size	Clg/CF Switch Settings			External Static Pressure (ESP)									
	SWx-3	SWx-2	SWx-1	0.1	0.2	0.3	0.4	0.5	0.6	0.7	0.8	0.9	1.0
60080													
Clg Default:	OFF	OFF	OFF	1745	1755	1755	1760	1755	1750	1745	1725	1705	1685
CF Default:	OFF	OFF	OFF	700	710	750	725	750	See note 4				
Cooling (SW2) Cont Fan (SW3)	OFF	OFF	ON	700	710	750	725	750	See note 4				
	OFF	ON	OFF	830	860	870	890	960	See note 4				
	OFF	ON	ON	1045	1045	1060	1070	1070	1070	1095	1090	1080	1070
	ON	OFF	OFF	1215	1220	1245	1240	1235	1235	1225	1220	1235	1235
	ON	OFF	ON	1370	1370	1390	1390	1400	1395	1400	1390	1390	1385
	ON	ON	OFF	1745	1755	1755	1760	1755	1750	1745	1725	1705	1685
	ON	ON	ON	1745	1755	1755	1760	1755	1750	1745	1725	1705	1685
Clg SW2:	Maximum Clg Airflow [2]			1920	1920	1945	1945	1945	1960	1950	1940	1915	1900
Heating (SW1)	Maximum Heat Airflow [3]			1340	1355	1370	1385	1380	1385	1400	1400	1385	1380
	Intermediate Heat Airflow [3]			780	810	835	840	845	See note 4				
	Minimum Heat Airflow [3]			595	595	600	595	605	See note 4				

Unit Size	Clg/CF Switch Settings			External Static Pressure (ESP)									
	SWx-3	SWx-2	SWx-1	0.1	0.2	0.3	0.4	0.5	0.6	0.7	0.8	0.9	1.0
66100													
Clg Default:	OFF	OFF	OFF	1820	1825	1840	1845	1840	1835	1825	1805	1780	1770
CF Default:	OFF	OFF	OFF	750	740	745	730	715	See note 4				
Cooling (SW2) Cont Fan (SW3)	OFF	OFF	ON	750	740	745	730	715	See note 4				
	OFF	ON	OFF	900	900	915	910	905	See note 4				
	OFF	ON	ON	1070	1075	1095	1095	1090	1085	1095	1080	1065	1070
	ON	OFF	OFF	1280	1285	1305	1305	1310	1305	1295	1300	1290	1285
	ON	OFF	ON	1440	1445	1465	1465	1470	1485	1480	1485	1475	1460
	ON	ON	OFF	1820	1825	1840	1845	1840	1835	1825	1805	1780	1770
	ON	ON	ON	2135	2140	2140	2135	2140	2130	2115	2100	2070	2015
Clg SW2:	Maximum Clg Airflow [2]			2160	2165	2175	2170	2160	2150	2135	2120	2065	2020
Heating (SW1)	Maximum Heat Airflow [3]			1570	1575	1595	1595	1600	1605	1600	1600	1590	1575
	Intermediate Heat Airflow [3]			950	955	965	975	970	See note 4				
	Minimum Heat Airflow [3]			755	745	750	735	720	See note 4				

Unit Size	Clg/CF Switch Settings			External Static Pressure (ESP)									
	SWx-3	SWx-2	SWx-1	0.1	0.2	0.3	0.4	0.5	0.6	0.7	0.8	0.9	1.0
66120													
Clg Default:	OFF	OFF	OFF	1850	1855	1860	1855	1850	1830	1805	1775	1750	1730
CF Default:	OFF	OFF	OFF	930	925	915	900	885	See note 4				
Cooling (SW2) Cont Fan (SW3)	OFF	OFF	ON	765	745	740	705	680	See note 4				
	OFF	ON	OFF	930	925	915	900	885	See note 4				
	OFF	ON	ON	1095	1100	1110	1105	1085	See note 4				
	ON	OFF	OFF	1265	1255	1265	1280	1275	1285	1270	1260	1250	1230
	ON	OFF	ON	1465	1455	1470	1465	1465	1470	1455	1450	1435	1415
	ON	ON	OFF	1850	1855	1860	1855	1850	1830	1805	1775	1750	1730
	ON	ON	ON	2200	2200	2200	2190	2185	2170	2145	2085	1990	1890
Clg SW2:	Maximum Clg Airflow [2]			2200	2200	2200	2190	2185	2170	2145	2085	1990	1890
Heating (SW1)	Maximum Heat Airflow [3]			1815	1820	1825	1820	1815	1795	1775	1745	1720	1700
	Intermediate Heat Airflow [3]			1095	1100	1110	1105	1085	See note 4				

AIR DELIVERY - CFM NOTES

1. Nominal 350 CFM/ton cooling airflow is delivered with SW1-5 and SW4-3 set to OFF.
   Set SW1-5 to ON for nominal 400 CFM/ton (+15% airflow).
   Set SW4-3 to ON for nominal 325 CFM/ton (-7% airflow).
   Set both SW1-5 and SW4-3 to ON for nominal 370 CFM/ton (+7% airflow).
   The above adjustments in airflow are subject to motor horsepower range/capacity.
2. Maximum cooling airflow is achieved when switches SW2-1, SW2-2, SW2-3 and SW1-5 are set to ON, and SW4-3 is set to OFF.
3. All heating CFM's are when low/medium heat rise adjustment switch (SW1-3) and comfort/efficiency adjustment switch (SW1-4) are both set to OFF.
4. Ductwork must be sized for high-heating CFM within the operational range of ESP. Operation within the blank areas of the chart is not recommended because high-heat operation will be above 1.0 ESP.
5. All airflows on 21" casing size furnaces are 5% less on side return only installations.
6. Side returns for 24.5" casing sizes require two sides, or side and bottom, to allow sufficient airflow at the return of the furnace.

MAXIMUM ALLOWABLE EXPOSED VENT LENGHTS INSULATION TABLE - FT. / M

Maximum Length of Uninsulated and Insulated Vent Pipe-Ft (M)																	
Modulating Furnace High Heat Input	Winter Design Temp ° F (° C)	Pipe Length in Ft. & M	No Insulation					3/8-in. (9.5 mm)					1/2-in. (12.7 mm)				
			Pipe Diameter-inches (mm)					Pipe Diameter-inches (mm)					Pipe Diameter-inches (mm)				
			1.5	2.0	2.5	3.0	4.0	1.5	2.0	2.5	3.0	4.0	1.5	2.0	2.5	3.0	4.0
			(38)	(51)	(64)	(76)	(102)	(38)	(51)	(64)	(76)	(102)	(38)	(51)	(64)	(76)	(102)
60000	20 (-10)	Ft.	34.0	29.0	28.0	23.0	N/A	55.0	88.0	79.0	69.0	N/A	55.0	104.0	93.0	81.0	N/A
		M	10.4	8.8	8.5	7.0	N/A	16.8	26.8	24.1	21.0	N/A	16.8	31.7	28.3	24.7	N/A
	0 (-20)	Ft.	14.0	9.0	7.0	0.0	N/A	55.0	49.0	43.0	34.0	N/A	55.0	60.0	52.0	42.0	N/A
		M	4.3	2.7	2.1	0.0	N/A	16.8	14.9	13.1	10.4	N/A	16.8	18.3	15.8	12.8	N/A
	-20 (-30)	Ft.	5.0	0.0	0.0	0.0	N/A	41.0	32.0	26.0	18.0	N/A	50.0	40.0	33.0	24.0	N/A
		M	1.5	0.0	0.0	0.0	N/A	12.5	9.8	7.9	5.5	N/A	15.2	12.2	10.1	7.3	N/A
	-40 (-40)	Ft.	0.0	0.0	0.0	0.0	N/A	30.0	21.0	16.0	8.0	N/A	37.0	28.0	22.0	13.0	N/A
		M	0.0	0.0	0.0	0.0	N/A	9.1	6.4	4.9	2.4	N/A	11.3	8.5	6.7	4.0	N/A
60600	20 (-10)	Ft.	34.0	29.0	28.0	23.0	N/A	55.0	88.0	79.0	69.0	N/A	55.0	104.0	93.0	81.0	N/A
		M	10.4	8.8	8.5	7.0	N/A	16.8	26.8	24.1	21.0	N/A	16.8	31.7	28.3	24.7	N/A
	0 (-20)	Ft.	14.0	9.0	7.0	0.0	N/A	55.0	49.0	43.0	34.0	N/A	55.0	60.0	52.0	42.0	N/A
		M	4.3	2.7	2.1	0.0	N/A	16.8	14.9	13.1	10.4	N/A	16.8	18.3	15.8	12.8	N/A
	-20 (-30)	Ft.	5.0	0.0	0.0	0.0	N/A	41.0	32.0	26.0	18.0	N/A	50.0	40.0	33.0	24.0	N/A
		M	1.5	0.0	0.0	0.0	N/A	12.5	9.8	7.9	5.5	N/A	15.2	12.2	10.1	7.3	N/A
	-40 (-40)	Ft.	0.0	0.0	0.0	0.0	N/A	30.0	21.0	16.0	8.0	N/A	37.0	28.0	22.0	13.0	N/A
		M	0.0	0.0	0.0	0.0	N/A	9.1	6.4	4.9	2.4	N/A	11.3	8.5	6.7	4.0	N/A
80000	20 (-10)	Ft.	35.0	39.0	39.0	33.0	25.0	35.0	118.0	107.0	92.0	76.0	35.0	130.0	125.0	109.0	90.0
		M	10.7	11.9	11.9	10.1	7.6	10.7	36.0	32.6	28.0	23.2	10.7	39.6	38.1	33.2	27.4
	0 (-20)	Ft.	22.0	16.0	14.0	7.0	0.0	35.0	69.0	60.0	49.0	35.0	35.0	83.0	72.0	60.0	45.0
		M	6.7	4.9	4.3	2.1	0.0	10.7	21.0	18.3	14.9	10.7	10.7	25.3	21.9	18.3	13.7
	-20 (-30)	Ft.	11.0	5.0	2.0	0.0	0.0	35.0	46.0	39.0	29.0	16.0	35.0	57.0	48.0	37.0	23.0
		M	3.4	1.5	0.6	0.0	0.0	10.7	14.0	11.9	8.8	4.9	10.7	17.4	14.6	11.3	7.0
	-40 (-40)	Ft.	4.0	0.0	0.0	0.0	0.0	35.0	33.0	26.0	17.0	4.0	35.0	41.0	34.0	24.0	11.0
		M	1.2	0.0	0.0	0.0	0.0	10.7	10.1	7.9	5.2	1.2	10.7	12.5	10.4	7.3	3.4
100000	20 (-10)	Ft.	N/A	47.0	47.0	41.0	32.0	N/A	50.0	110.0	112.0	93.0	N/A	50.0	110.0	132.0	110.0
		M	N/A	14.3	14.3	12.5	9.8	N/A	15.2	33.5	34.1	28.3	N/A	15.2	33.5	40.2	33.5
	0 (-20)	Ft.	N/A	21.0	19.0	12.0	1.0	N/A	50.0	74.0	61.0	45.0	N/A	50.0	89.0	74.0	57.0
		M	N/A	6.4	5.8	3.7	0.3	N/A	15.2	22.6	18.6	13.7	N/A	15.2	27.1	22.6	17.4
	-20 (-30)	Ft.	N/A	8.0	6.0	0.0	0.0	N/A	50.0	49.0	38.0	23.0	N/A	50.0	60.0	48.0	32.0
		M	N/A	2.4	1.8	0.0	0.0	N/A	15.2	14.9	11.6	7.0	N/A	15.2	18.3	14.6	9.8
	-40 (-40)	Ft.	N/A	1.0	0.0	0.0	0.0	N/A	42.0	34.0	24.0	10.0	N/A	50.0	43.0	32.0	18.0
		M	N/A	0.3	0.0	0.0	0.0	N/A	12.8	10.4	7.3	3.0	N/A	15.2	13.1	9.8	5.5
120000	20 (-10)	Ft.	N/A	N/A	15.0	49.0	40.0	N/A	N/A	15.0	100.0	111.0	N/A	N/A	15.0	100.0	131.0
		M	N/A	N/A	4.6	14.9	12.2	N/A	N/A	4.6	30.5	33.8	N/A	N/A	4.6	30.5	39.9
	0 (-20)	Ft.	N/A	N/A	15.0	17.0	6.0	N/A	N/A	15.0	75.0	57.0	N/A	N/A	15.0	90.0	70.0
		M	N/A	N/A	4.6	5.2	1.8	N/A	N/A	4.6	22.9	17.4	N/A	N/A	4.6	27.4	21.3
	-20 (-30)	Ft.	N/A	N/A	10.0	2.0	0.0	N/A	N/A	15.0	48.0	32.0	N/A	N/A	15.0	59.0	42.0
		M	N/A	N/A	3.0	0.6	0.0	N/A	N/A	4.6	14.6	9.8	N/A	N/A	4.6	18.0	12.8
	-40 (-40)	Ft.	N/A	N/A	1.0	0.0	0.0	N/A	N/A	15.0	32.0	17.0	N/A	N/A	15.0	41.0	25.0
		M	N/A	N/A	0.3	0.0	0.0	N/A	N/A	4.6	9.8	5.2	N/A	N/A	4.6	12.5	7.6

* Pipe length (ft) specified for maximum pipe lengths located in unconditioned spaces. Pipes located in unconditioned space cannot exceed total allowable pipe length calculated from Table 1 or 3.

† Insulation thickness based on R value of 3.5 per in.

MAXIMUM EQUIVALENT VENT LENGTH - FT. (M)

NOTE: Maximum Equivalent Vent Length (MEVL) includes standard and concentric vent termination and does NOT include elbows. Use Table 2 - Deductions from Maximum Equivalent Vent Length to determine allowable vent length for each application.

Table 1 – Maximum Equivalent Vent Length - Ft. (M)
0 to 4500 Ft. (0 to 1370 M) Altitude

Altitude FT (M)	Unit Size BTU/Hr	DIRECT VENT (2-PIPE) AND VENTILATED COMBUSTION AIR ONLY									
		Vent Pipe Diameter (in.)									
		1-1/2		2		2-1/2		3		4	
0 to 2000 (0 to 610)	60,000	55	(16.8)	135	(41.1)	235	(71.6)	265	(80.8)	NA	
	80,000	35	(10.7)	130	(39.6)	175	(53.3)	235	(71.6)	265	(80.8)
	100,000	NA		50	(15.2)	110	(33.5)	235	(71.6)	265	(80.8)
	120,000	NA		NA		15	(4.6)	100	(30.5)	250	(76.2)
2001 to 3000 (610 to 914)	60,000	45	(13.7)	127	(38.7)	222	(67.7)	250	(76.2)	NA	
	80,000	30	(9.1)	90	(27.4)	165	(50.3)	222	(67.7)	249	(75.9)
	100,000	NA		40	(12.2)	104	(31.7)	223	(68.0)	250	(76.2)
	120,000	NA		NA		11	(3.4)	93	(28.3)	237	(72.2)
3001 to 4000 (914 to 1219)	60,000	40	(12.2)	119	(36.3)	210	(64.0)	235	(71.6)	NA	
	80,000	25	(7.6)	85	(25.9)	155	(47.2)	210	(64.0)	232	(70.7)
	100,000	NA		40	(12.2)	98	(29.9)	211	(64.3)	236	(71.9)
	120,000	NA		NA		8	(2.4)	86	(26.2)	224	(68.3)
4001 to 4500 (1219 to 1370)	60,000	35	(10.7)	115	(35.1)	204	(62.2)	228	(69.5)	NA	
	80,000	23	(7.0)	85	(25.9)	150	(45.7)	202	(61.6)	224	(68.3)
	100,000	NA		40	(12.2)	94	(28.7)	205	(62.5)	229	(69.8)
	120,000	NA		NA		NA		83	(25.3)	217	(66.1)

* See notes at end of venting tables.
*See Table 3 for altitudes over 4500 ft. (1370 M)

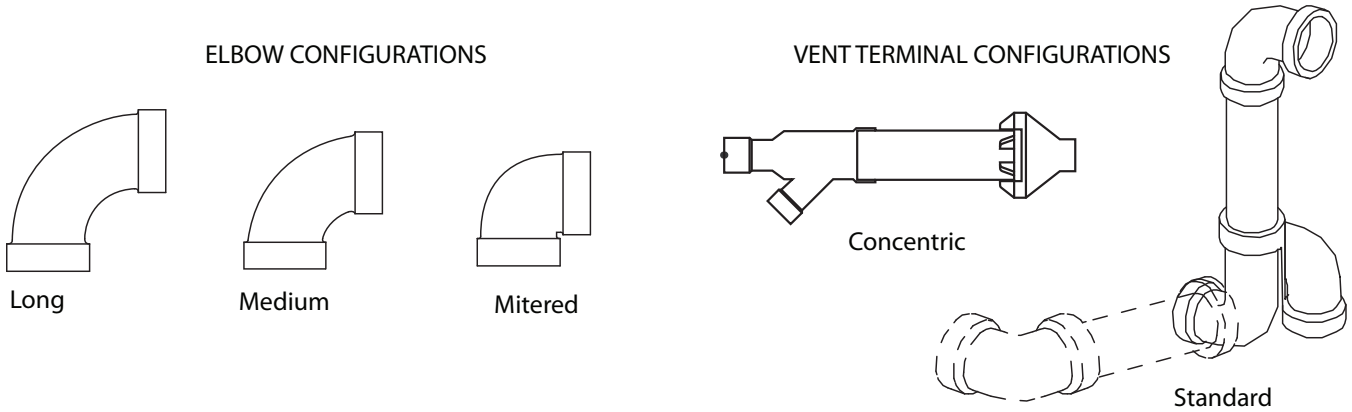

A11580

Table 2 – Deductions from Maximum Equivalent Vent Length - Ft. (M)

Pipe Diameter (in):	1-1/2		2		2-1/2		3		4	
Mitered 90° Elbow	8	(2.4)	8	(2.4)	8	(2.4)	8	(2.4)	8	(2.4)
Medium Radius 90° Elbow	5	(1.5)	5	(1.5)	5	(1.5)	5	(1.5)	5	(1.5)
Long Radius 90° Elbow	3	(0.9)	3	(0.9)	3	(0.9)	3	(0.9)	3	(0.9)
Mitered 45° Elbow	4	(1.2)	4	(1.2)	4	(1.2)	4	(1.2)	4	(1.2)
Medium Radius 45° Elbow	2.5	(0.8)	2.5	(0.8)	2.5	(0.8)	2.5	(0.8)	2.5	(0.8)
Long Radius 45° Elbow	1.5	(0.5)	1.5	(0.5)	1.5	(0.5)	1.5	(0.5)	1.5	(0.5)
Tee	16	(4.9)	16	(4.9)	16	(4.9)	16	(4.9)	16	(4.9)
Concentric Vent Termination	NA		0	(0.0)	NA		0	(0.0)	NA	
Standard Vent Termination	0	(0.0)	0	(0.0)	0	(0.0)	0	(0.0)	0	(0.0)

Venting System Length Calculations

The maximum length for each vent pipe (inlet or exhaust) equals the Maximum Equivalent Vent Length (MEVL) from Table 1 or Table 3 minus the number of elbows multiplied by the deduction for each elbow in Table 2.

Standard vent terminations and concentric vent terminations count for zero deductions.

See Vent Manufacturers' data for equivalent lengths of flexible vent piping.

DO NOT ASSUME that one foot of flexible vent pipe is equivalent to one foot of standard PVC vent pipe.

Example

A direct-vent 60,000 Btuh furnace installed at 2100 ft. (640 m) with 2-in.(51 mm) Vent piping. Venting system includes, **FOR EACH PIPE**, (3) 90° long radius elbows, (2) 45° long radius elbows and a concentric vent kit.

Maximum Equivalent Vent Length				=	127 ft.	(From Table 1)
Deduct (3) 90 long radius	3	x	3 ft.	=	- 9 ft.	(From Table 2)
Deduct (2) 45 long radius	2	x	1.5 ft.	=	- 3 ft.	(From Table 2)
No deduction for Concentric Vent Kit			0 ft.	=	- 0 ft.	(From Table 2)
Maximum Vent Length				=	115 ft.	For **EACH** vent or inlet pipe

NOTE: Maximum Equivalent Vent Length (MEVL) includes standard and concentric vent termination and does NOT include elbows. Use Table 2 - Deductions from Maximum Equivalent Vent Length to determine allowable vent length for each application.

Table 3 – Maximum Equivalent Vent Length - Ft. (M)
4501 to 10,000 Ft. (0 to 1370 M) Altitude

Altitude FT (M)	Unit Size	DIRECT VENT (2-PIPE) AND VENTILATED COMBUSTION AIR ONLY									
		Vent Pipe Diameter									
		1-1/2		2		2-1/2		3		4	
4501 to 5000 (1370 to 1524)	60,000	35	(10.7)	111	(33.8)	198	(60.4)	221	(67.4)	NA	
	80,000	23	(7.0)	85	(25.9)	146	(44.5)	195	(59.4)	216	(65.8)
	100,000	NA		40	(12.2)	91	(27.7)	200	(61.0)	222	(67.7)
	120,000	NA		NA		NA		80	(24.4)	211	(64.3)
5001 to 6000 (1524 to 1829)	60,000	37	(11.3)	103	(31.4)	186	(56.7)	207	(63.1)	NA	
	80,000	22	(6.7)	76	(23.2)	137	(41.8)	183	(55.8)	200	(61.0)
	100,000	NA		33	(10.1)	85	(25.9)	188	(57.3)	208	(63.4)
	120,000	NA		NA		NA		74	(22.6)	199	(60.7)
6001 to 7000 (1829 to 2134)	60,000	35	(10.7)	96	(29.3)	174	(53.0)	194	(59.1)	NA	
	80,000	20	(6.1)	71	(21.6)	120	(36.6)	171	(52.1)	185	(56.4)
	100,000	NA		31	(9.4)	79	(24.1)	178	(54.3)	195	(59.4)
	120,000	NA		NA		NA		68	(20.7)	187	(57.0)
7001 to 8000 (2134 to 2438)	60,000	32	(9.8)	89	(27.1)	163	(49.7)	181	(55.2)	NA	
	80,000	18	(5.5)	66	(20.1)	120	(36.6)	159	(48.5)	170	(51.8)
	100,000	NA		29	(8.8)	73	(22.3)	167	(50.9)	182	(55.5)
	120,000	NA		NA		NA		62	(18.9)	175	(53.3)
8001 to 9000 (2438 to 2743)	60,000	30	(9.1)	82	(25.0)	152	(46.3)	168	(51.2)	NA	
	80,000	17	(5.2)	62	(18.9)	111	(33.8)	148	(45.1)	156	(47.5)
	100,000	NA		27	(8.2)	67	(20.4)	157	(47.9)	170	(51.8)
	120,000	NA		NA		NA		56	(17.1)	164	(50.0)
9001 to 10,000 (2743 to 3048)	60,000	27	(8.2)	76	(23.2)	142	(43.3)	156	(47.5)	NA	
	80,000	15	(4.6)	57	(17.4)	103	(31.4)	137	(41.8)	142	(43.3)
	100,000	NA		24	(7.3)	62	(18.9)	147	(44.8)	157	(47.9)
	120,000	NA		NA		NA		51	(15.5)	153	(46.6)

Notes:

1. Use only the vent pipe sizes shown for each furnace. It is NOT necessary to choose the smallest diameter pipe possible for venting.
2. NA – Not allowed. Pressure switch will not close, or flame disturbance may result.
3. Vent sizing for Canadian installations over 4500 ft. (1370 M) above sea level are subject to acceptance by the local authorities having jurisdiction.
4. Size both the combustion air and vent pipe independently, then use the larger size for both pipes.
5. Assume the two 45° elbows equal one 90° elbow. Wide radius elbows are desirable and may be required in some cases.
6. Elbow and pipe sections within the furnace casing and at the vent termination should not be included in vent length or elbow count.
7. The minimum pipe length is 5 ft. (1.5 M) linear feet (meters) for all applications.
8. Use 3–in. (76 mm) diameter vent termination kit for installations requiring 4–in. (102 mm) diameter pipe.

RETURN AIR TEMPERATURE

This furnace is designed for continuous return-air minimum temperature of 60°F (15°C) db or intermittent operation down to 55°F (13°C) db such as when used with a night setback thermometer. Return-air temperature must not exceed 80°F (27°C) db. Failure to follow these return air limits may affect reliability of heat exchangers, motors and controls.

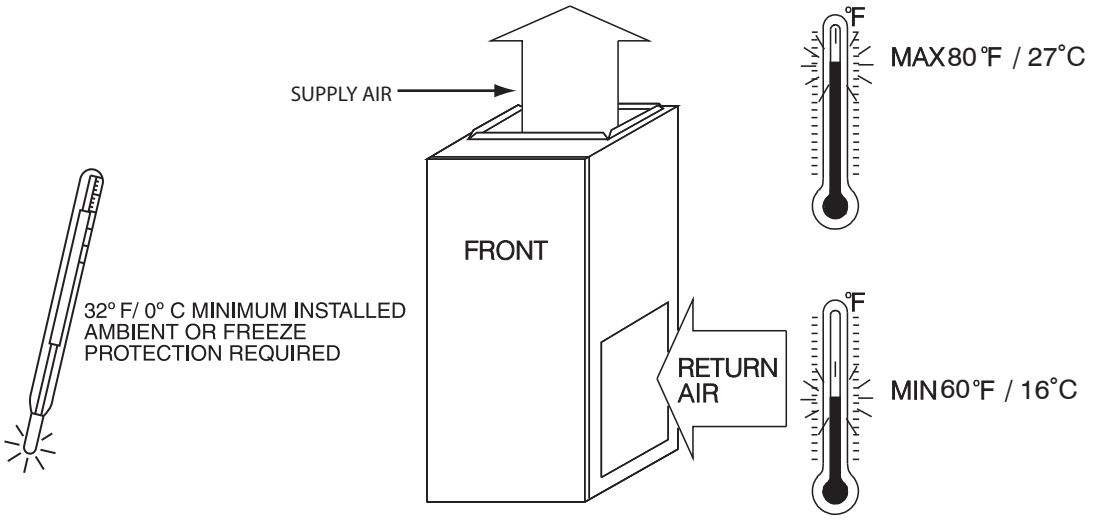

A10490

MINIMUM CLEARANCES TO COMBUSTIBLE MATERIALS

POSITION	CLEARANCE
Rear	0 (0 mm)
Front (Combustion air openings in furnace and in structure)	1 in. (25 mm)
Required for service	*24 in. (610 mm)
All Sides of Supply Plenum	1 in. (25 mm)
Sides	0 (0 mm)
Vent	0 (0 mm)
Top of Furnace	1 in. (25 mm)

* Recommended

VENTILATED COMBUSTION-AIR PIPE FOR ATTIC / CRAWLSPACE APPLICATIONS

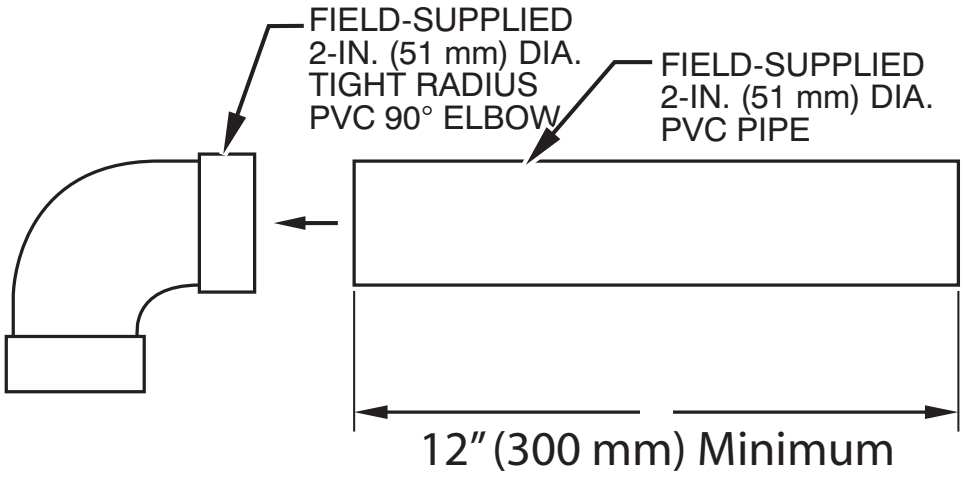

A11487

NOTE: See Installation Instructions for specific venting configurations.

DOWNFLOW SUBBASE

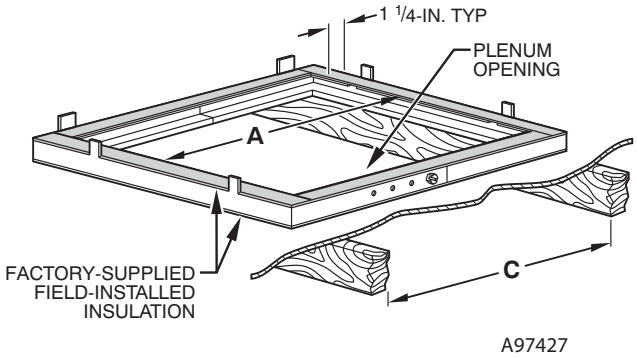

Assembled

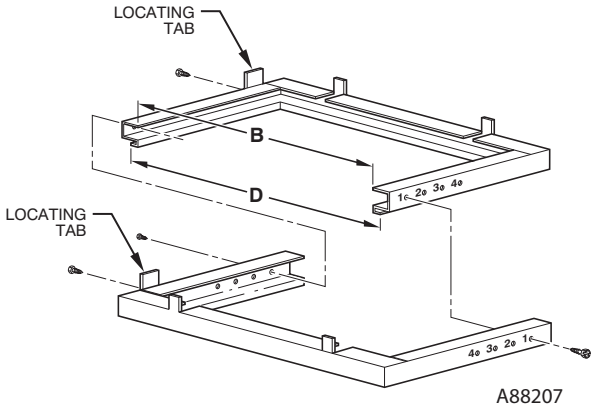

Disassembled

987MA

DIMENSIONS (IN. / MM)						
FURNACE CASING WIDTH	FURNACE IN DOWNFLOW APPLICATION	PLENUM OPENING*		FLOOR OPENING		HOLE NO. FOR WIDTH ADJUSTMENT
		A	B	C	D	
17–1/2 (444.5)	Furnace with or without Cased Coil Assembly or Coil Box	15–1/8 (384.2)	19 (482.6)	16–3/4 (425.5)	20–3/8 (517.5)	3
21 (533.4)	Furnace with or without Cased Coil Assembly or Coil Box	18–5/8 (396.4)	19 (482.6)	20–1/4 (514.4)	20–3/8 (517.5)	2
24–1/2 (622.3)	Furnace with or without Cased Coil Assembly or Coil Box	22–1/8 (562.0)	19 (482.6)	23–3/4 (603.3)	20–3/8 (517.5)	1

*The plenum should be constructed 1/4–in. (6 mm) smaller in width and depth than the plenum dimensions shown above.

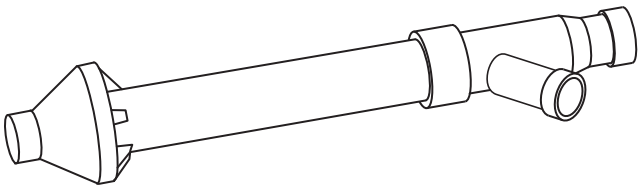

Concentric Vent Kit

A93086

A concentric vent kit allows vent and combustion-air pipes to terminate through a single exit in a roof or side wall. One pipe runs inside the other allowing venting through the inner pipe and combustion air to be drawn in through the outer pipe.

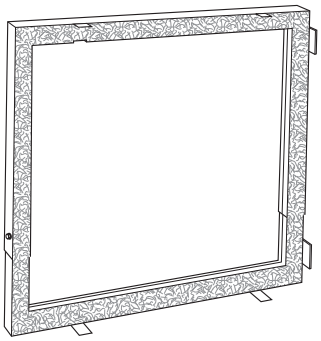

Downflow Subbase

A88202

One base fits all furnace sizes. The base is designed to be installed between the furnace and a combustible floor when no coil box is used or when a coil box other than a Bryant cased coil is used. It is CSA design certified for use with Bryant branded furnaces when installed in downflow applications.

MEDIA FILTER CABINET

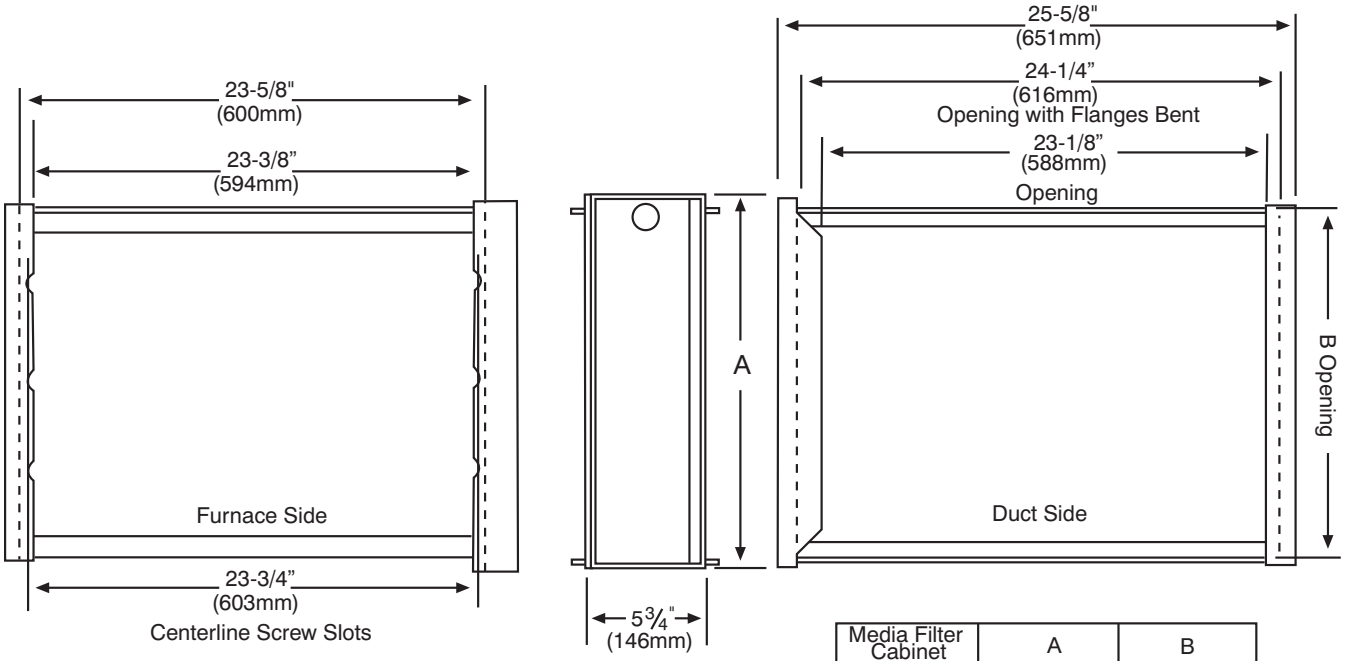

Media Filter Cabinet	A	B
16" (406mm)	17" (432mm)	16" (406mm)
20" (508mm)	21" (533mm)	20" (508mm)
24" (610mm)	25" (635mm)	24" (610mm)

A11456

TYPICAL WIRING SCHEMATIC

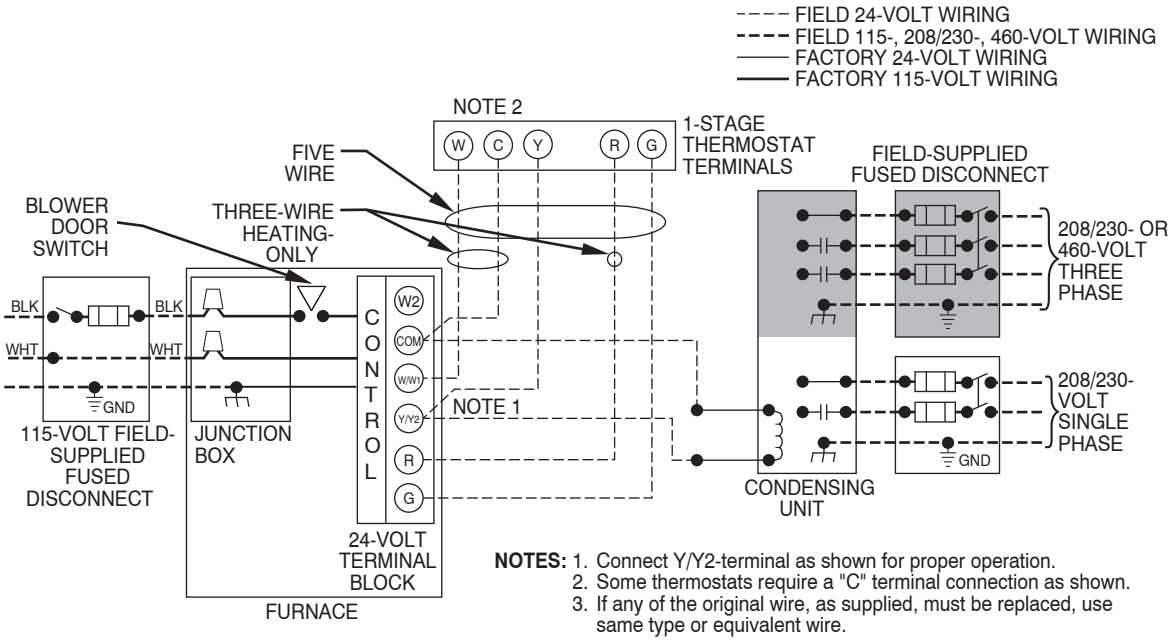

NOTES: 1. Connect Y/Y2-terminal as shown for proper operation.
2. Some thermostats require a "C" terminal connection as shown.
3. If any of the original wire, as supplied, must be replaced, use same type or equivalent wire.

A11401

DIMENSIONAL DRAWING

NOTE: ALL DIMENSIONS IN INCH [MM]

FURNACE SIZE (MODELS)	A (CABINET WIDTH)		B (OUTLET WIDTH)		C (BOTTOM INLET WIDTH)		D		SHIPPING WEIGHT	
(987MA)	inches	mm	inches	mm	inches	mm	inches	mm	LBS	KG
42060	17 1/2	445	15 7/8	403	16	406	8 3/4	222	154.0	69.3
42080									164.0	73.8
60060	21	533	19 3/8	492	19 1/2	495	10 1/2	267	158.5	72.0
60080									168.5	76.6
66100									178.5	80.3
66120	24 1/2	622	22 7/8	581	23	584	12 1/4	311	202.5	91.1

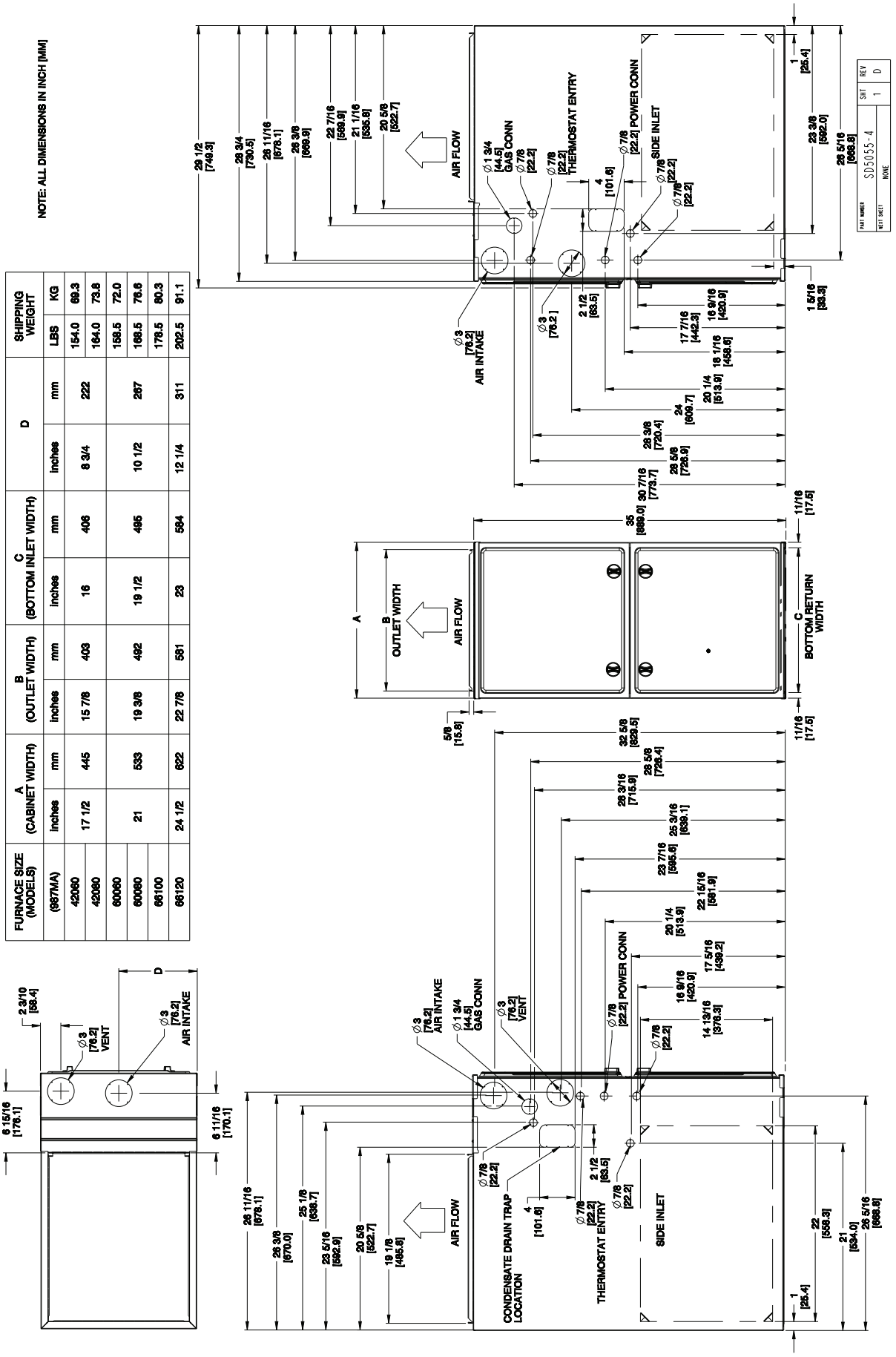

A11607

987MA

GUIDE SPECIFICATIONS

General

System Description

Furnish a _____ 4-way multipoise modulating gas-fired condensing furnace for use with natural gas or propane (factory- authorized conversion kit required for propane); furnish cold air return plenum; furnish external media cabinet for use with accessory media filter or standard filter.

Quality Assurance

Unit will be designed, tested and constructed to the current ANSI Z 21.47/CSA 2.3 design standard for gas-fired central furnaces.

Unit will be third party certified by CSA to the current ANSI Z 21.47/CSA 2.3 design standard for gas-fired central furnaces. Unit will carry the CSA Blue Star® and Blue Flame® labels. Unit efficiency testing will be performed per the current DOE test procedure as listed in the Federal Register.

Unit will be certified for capacity and efficiency and listed in the latest AHRI Consumer's Directory of Certified Efficiency Ratings.

Unit will carry the current Federal Trade Commission Energy Guide efficiency label.

Delivery, Storage, and Handling

Unit will be shipped as single package only and is stored and handled per unit manufacturer's recommendations.

Warranty (for inclusion by specifying engineer)

U.S. and Canada only. Warranty certificate available upon request.

Equipment

Blower Wheel and ECM Blower Motor

Galvanized blower wheel shall be centrifugal type, statically and dynamically balanced. Blower motor of ECM type shall be permanently lubricated with sealed ball bearings, of _____hp, and have infinitely variable speed from 300-1300 RPM operating only when motor inputs are provided. Blower motor shall be direct drive and soft mounted to the blower scroll to reduce vibration transmission.

Filters

Furnace shall have reusable-type filters. Filter shall be _____ in. (mm) X _____ in. (mm). An accessory highly efficient Media Filter is available as an option. _____ Media Filter.

Casing

Casing shall be of .030 in. thickness minimum, pre-painted galvanized steel.

Draft Inducer Motor

Draft inducer motor shall be variable-speed design.

Primary Heat Exchangers

Primary heat exchangers shall be 3-Pass corrosion-resistant aluminized steel of fold-and-crimp sectional design and applied operating under negative pressure.

Secondary Heat Exchangers

Secondary heat exchangers shall be of a stainless steel flow-through of fin-and-tube design and applied operating under negative pressure.

Controls

Controls shall include a micro-processor-based integrated electronic control board with at least 16 service troubleshooting codes displayed via diagnostic flashing LED light on the control, a self-test feature that checks all major functions of the furnace, and a replaceable automotive-type circuit protection fuse. Multiple operational settings available including separate blower speeds for all modulating capacities, low cooling, high cooling and continuous fan. Continuous fan speed may be adjusted from the thermostat. Cooling airflow will be selectable between 325 and 400 CFM per ton of air conditioning. Features will also include temporary reduced airflow in the cooling mode for improved dehumidification when an Evolution Control or T6-PRH is selected as the thermostat.

Operating Characteristics

Heating capacity shall be _____ Btuh input; _____ Btuh output capacity.

Fuel Gas Efficiency shall be _____ AFUE.

Air delivery shall be _____ cfm minimum at 0.50 in. W.C. external static pressure.

Dimensions shall be: depth_____in. (mm); width _____in. (mm); height_____in. (mm) (casing only). Height shall be _____in. (mm) with A/C coil and _____in. (mm) overall with plenum.

Electrical Requirements

Electrical supply shall be 115 volts, 60 Hz, single-phase (nominal). Minimum wire size shall be _____AWG; maximum fuse size of HACR-type designated circuit breaker shall be _____ amps.

Special Features

Refer to section of the product data identifying accessories and descriptions for specific features and available enhancements.

©2012 Bryant Heating & Cooling Systems ● 7310 W. Morris St. ● Indianapolis, IN 46231 Printed in U.S.A. Edition Date: 01/12

Catalog No. PDS987MA–04

Manufacturer reserves the right to discontinue, or change at any time, specifications or designs without notice and without incurring obligations.

Replaces: PDS987MA–03