# SYSTXBBUIZ01-B
# EVOLUTION™ ZONE CONTROL

# Product Data

**NOTE:** Evolution Zone Control compatible with Evolution rated indoor equipment only.

## EVOLUTION™ ZONE CONTROL

Bryant specializes in creating a customized home comfort system tailored to your needs with our broad selection of residential heating and cooling products. The Evolution Zone Control System is the ultimate control center for all of your system components. When you add an Evolution Zone Control to a compatible variable speed furnace, fan coil, or small packaged product, you will enjoy longer heating and cooling cycles at lower fan speeds for a more consistent temperature throughout your home. By adding an Evolution or Preferred Series compatible outdoor unit, your benefits will increase even more. Benefits include better humidity and temperature control as well as a more energy efficient comfort system.

## INDUSTRY LEADING FEATURES/BENEFITS

Bryant's revolutionary Evolution Zone Control is the smart control of the future. The Evolution Zone Control features a large backlit liquid crystal display, making it easier to read the temperature, even at night. Intuitive prompts let you program everything from humidity levels to fan speeds, giving you ultimate control over your home comfort. The Evolution Zoning system does not require a bypass damper, leaving air temperature (LAT) sensor, or a field supplied power transformer.

- Up to 8 zones of control
- Patented automatic duct assessment design compensates for duct work variability
- No bypass damper required or recommended
- No LAT or HPT sensors required or recommended
- No field-installed transformer required
- Fan airflow adjustment by zone
- 4 wire installation from each component in the system
- Intuitive on screen prompts for ease of installation and service
- Perfect Humidity™ settings are the default, no longer requiring increased system setup
- Complete integration of the temperature, humidity, and ventilation in every season
- TrueSense™ Dirty Filter Detection
- Indoor Air Quality pop-up reminders
- 7 day programmability with 2 or 4 periods per day
- Easy timed override schedule
- Simplified vacation schedules
- Day-at-a-glance programming for simplified ease of use
- Programmable fan by period
- General maintenance reminder messaging
- Optional Remote Access Kit can be added for access to your system from the internet or phone

# MODEL NUMBER NOMENCLATURE

| SYSTX | BB | UIZ | 01 | -B |
|---|---|---|---|---|
| Product Type | Brand | Model Type | Packaged Quantity | Software Version |
| Evolution System | Bryant | UIZ – Zone User Interface<br>4ZC – Damper Control Module<br>NIM – Network Interface Module<br>SAM – System Access Module<br>RRS – Remote Room Sensor<br>LBP – Large Backplate<br>GRP – Green ABCD Connector | | |

SYSTXBBUIZ01 – B

**As an Energy Star® Partner, Bryant Heating & Cooling Systems has determined that this product meets the ENERGY STAR® guidelines for energy efficiency**

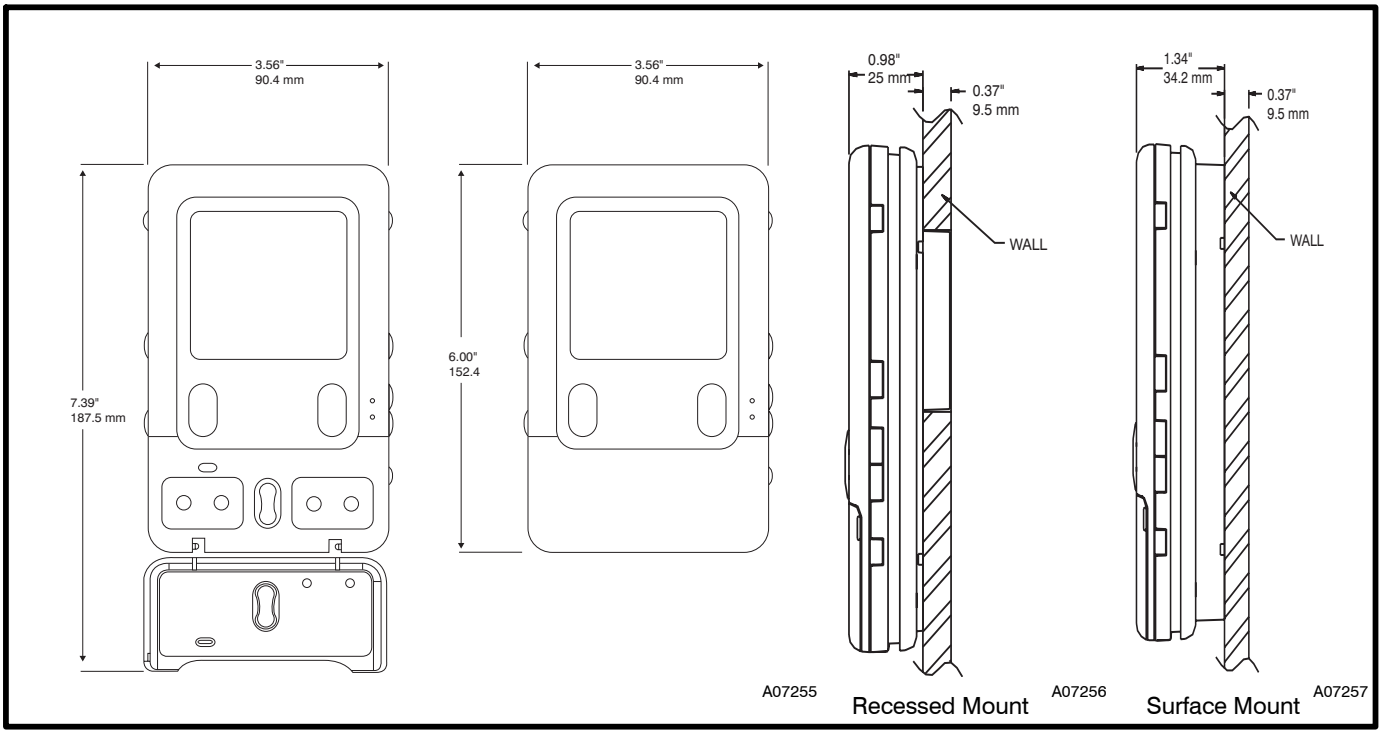


**Fig. 1 – Unit Dimensions**

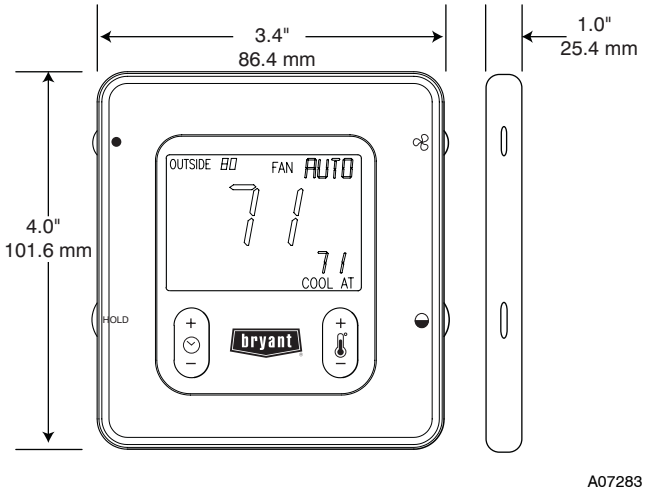


Fig. 2 – Smart Sensor Dimensions

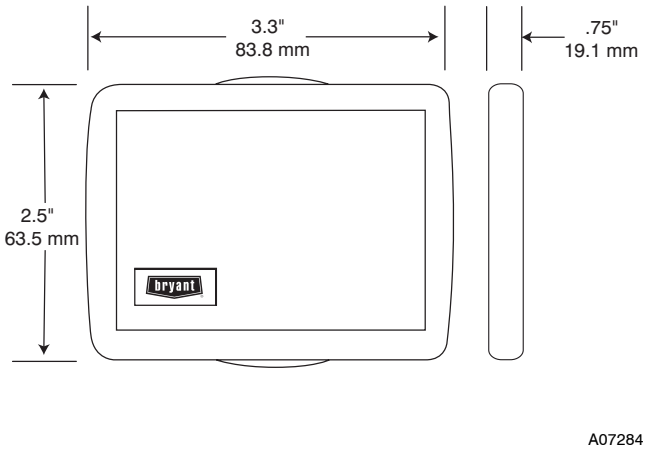


Fig. 3 – Remote Room Sensor Dimensions



# ZONING EQUIPMENT

| Description | Part No. |
|---|---|
| Evolution Zone Control | SYSTXBBUIZ01 – B |
| Evolution Network Interface Module (NIM) | SYSTXBBNIM01* |
| Evolution Damper Control Module (4 Zone) | SYSTXBBZC01† |

**NOTE**: Each piece of zoning equipment is sold separately allowing for customization of the zoning application.

* Required to control ventilator (when zoning is not applied)

* Required to control a non – communicating heat pump in Hybrid Heat™ applications.

* Required to control a non – communicating 2 – stage AC or HP (i.e. R – 22 Series A)

† One damper control module handles up to 4 zones. A second damper control module is needed for zones 5 – 8.

# OPTIONAL ACCESSORIES

| Description | Part No. |
|---|---|
| Evolution System Smart Sensor | SYSTXBBSMS01* |
| Evolution Remote Room Sensor (RRS) | SYSTXBBRRS01 |
| Evolution Large Decorative Backplate | SYSTXX0LBP01 |
| Green Indoor Unit Plug (ABCD Connector) – 10 Pack Replacement | SYSTXGRPLG10 |
| Evolution System Access Module (SAM) | SYSTXBBSAM01 |
| Evolution System Access Module (Remote Access Kit, Skytel – based) | SYSTXBBSAM01 |
| Evolution System Access Module (Remote Access Kit, Ethernet) | SYSTXBBCAT501 |
| Evolution System Access Module (Remote Access Kit, WiFi – Ethernet) | SYSTXBBWIFI01 |

* A combination of Evolution Smart Sensors and Evolution Remote Room Sensors can be used in the zones.

# REPLACEMENT ACCESSORIES

| | |
|---|---|
| TSTATBBSEN01 – B | Outdoor Sensor |
| ATO1 | Damper Control Module 1 – amp Fuse* |

*Available from RCD

# DAMPERS

| Description | | Part No. |
|---|---|---|
| Round Dampers | 6” / 152.4 mm | DAMPRND06INC – B |
| | 8” / 203.2 mm | DAMPRND08INC – B |
| | 10” / 254 mm | DAMPRND10INC – B |
| | 12” / 304.8 mm | DAMPRND12INC – B |
| | 14” / 355.6 mm | DAMPRND14INC – B |
| | 16” / 406.4 mm | DAMPRND16INC – B |
| Rectangular Dampers | 8” X 10” / 203.2 X 254 mm | DAMPREC08X10 – B |
| | 8” X 14” / 203.2 X 355.6 mm | DAMPREC08X14 – B |
| | 8” X 18” / 203.2 X 457.2 mm | DAMPREC08X18 – B |
| | 8” X 24” / 203.2 X 609.6 mm | DAMPREC08X24 – B |
| | 10” X 10” / 304.8 X 304.8 | DAMPREC10X10 – B |
| | 10” X 14” / 304.8 X 355.6 mm | DAMPREC10X14 – B |
| | 10” X 18” / 304.8 X 457.2 mm | DAMPREC10X18 – B |
| | 10” X 24” / 304.8 X 609.6 mm | DAMPREC10X24 – B |
| Rectangular Barometric Bypass | 8” X 14” / 203.2 X 355.6 mm | DAMPBAR08X14 |
| | 8” X 24” / 203.2 X 609.6 mm | DAMPBAR08X24 |
| Round Barometric Bypass | 8” / 203.2 mm | DAMPBAR08INC |
| | 10” / 254 mm | DAMPBAR10INC |
| | 12” / 304.8 mm | DAMPBAR12INC |
| | 14” / 355.6 mm | DAMPBAR14INC |
| | 16” / 406.4 mm | DAMPBAR16INC |

## DAMPERS (cont)

| Description | | Part No. |
|---|---|---|
| Slip – In Dampers | Side mount, 8” X 8” / 203.2 X 203.2 mm | DAMPSLS08X08 – B |
| | Bottom mount, 8” X 8” / 203.2 X 203.2 mm | DAMPSLB08X08 – B |
| | Side mount, 8” X 10” / 203.2 X 254 mm | DAMPSLS08X10 – B |
| | Bottom mount, 8” X 10” / 203.2 X 254 mm | DAMPSLB08X10 – B |
| | Side mount, 8” X 12” / 203.2 X 304.8 mm | DAMPSLS08X12 – B |
| | Bottom mount, 8” X 12” / 203.2 X 304.8 mm | DAMPSLB08X12 – B |
| | Side mount, 8” X 14” / 203.2 X 355.6 mm | DAMPSLS08X14 – B |
| | Bottom mount, 8” X 14” / 203.2 X 355.6 mm | DAMPSLB08X14 – B |
| | Side mount, 8” X 16” / 203.2 X 406.4 mm | DAMPSLS08X16 – B |
| | Bottom mount, 8” X 16” / 203.2 X 406.4 mm | DAMPSLB08X16 – B |
| | Side mount, 8” X 18” / 203.2 X 457.2 mm | DAMPSLS08x18 – B |
| | Bottom mount, 8” X 18” / 203.2 X 457.2 mm | DAMPSLB08X18 – B |
| | Side mount, 8” X 20” / 203.2 X 508 mm | DAMPSLS08X20 – B |
| | Bottom mount, 8” X 20” / 203.2 X 508 mm | DAMPSLB08X20 – B |
| | Side mount, 8” X 22” / 203.2 X 558.9 mm | DAMPSLS08X22 – B |
| | Bottom mount, 8” X 22” / 203.2 X 558.9 mm | DAMPSLB08X22 – B |
| | Side mount, 8” X 24” / 203.2 X 609.6 mm | DAMPSLS08X24 – B |
| | Bottom mount, 8” X 24” / 203.2 X 609.6 mm | DAMPSLB08X24 – B |
| | Side mount, 10” X 10” / 254 X 254 mm | DAMPSLS10X10 – B |
| | Bottom mount, 10” X 10” / 254 X 254 mm | DAMPSLB10X10 – B |
| | Side mount, 10” X 12” / 254 X 304.8 mm | DAMPSLS10X12 – B |
| | Bottom mount, 10” X 12” / 254 X 304.8 mm | DAMPSLB10X12 – B |
| | Side mount, 10” X 14” / 254 X 355.6 mm | DAMPSLS10X14 – B |
| | Bottom mount, 10” X 14” / 254 X 355.6 mm | DAMPSLB10X14 – B |
| | Side mount, 10” X 16” / 254 X 406.4 mm | DAMPSLS10X16 – B |
| | Bottom mount, 10” X 16” / 254 X 406.4 mm | DAMPSLB10X16 – B |
| | Side mount, 10” X 18” / 254 X 457.2 mm | DAMPSLS10X18 – B |
| | Bottom mount, 10” X 18” / 254 X 457.2 mm | DAMPSLB10X18 – B |
| | Side mount, 10” X 20” / 254 X 508 mm | DAMPSLS10X20 – B |
| | Bottom mount, 10” X 20” / 254 X 508 mm | DAMPSLB10X20 – B |
| | Side mount, 10” X 22” / 254 X 558.9 mm | DAMPSLS10X22 – B |
| | Bottom mount, 10” X 22” / 254 X 558.9 mm | DAMPSLB10X22 – B |
| | Side mount, 10” X 24” / 254 X 609.6 mm | DAMPSLS10X24 – B |
| | Bottom mount, 10” X 24” / 254 X 609.6 mm | DAMPSLB10X24 – B |
| | Side mount, 12” X 12” / 304.8 X 304.8 mm | DAMPSLS12X12 – B |
| | Bottom mount, 12” X 12” / 304.8 X 304.8 mm | DAMPSLB12X12 – B |
| | Side mount, 12” X 14” / 304.8 X 355.6 mm | DAMPSLS12X14 – B |
| | Bottom mount, 12” X 14” / 304.8 X 355.6 mm | DAMPSLB12X14 – B |
| | Side mount, 12” X 16” / 304.8 X 406.4 mm | DAMPSLS12X16 – B |
| | Bottom mount, 12” X 16” / 304.8 X 406.4 mm | DAMPSLB12X16 – B |
| | Side mount, 12” X 18” / 304.8 X 457.2 mm | DAMPSLS12X18 – B |
| | Bottom mount, 12” X 18” / 304.8 X 457.2 mm | DAMPSLB12X18 – B |
| | Side mount, 12” X 20” / 304.8 X 508 mm | DAMPSLS12X20 – B |
| | Bottom mount, 12” X 20” / 304.8 X 508 mm | DAMPSLB12X20 – B |
| | Side mount, 14” X 14” / 355.6 X 355.6 mm | DAMPSLS14X14 – B |
| | Bottom mount, 14” X 14” / 355.6 X 355.6 mm | DAMPSLB14X14 – B |
| | Side mount, 14” X 16” / 355.6 X 406.4 mm | DAMPSLS14X16 – B |
| | Bottom mount, 14” X 16” / 355.6 X 406.4 mm | DAMPSLB14X16 – B |
| | Side mount, 14” X 20” / 355.6 X 508 mm | DAMPSLS14X20 – B |
| | Bottom mount, 14” X 20” / 355.6 X 508 mm | DAMPSLB14X20 – B |
| | Side mount, 16” X 16” / 406.4 X 406.4 mm | DAMPSLS16X16 – B |
| | Bottom mount, 16” X 16” / 406.4 X 406.4 mm | DAMPSLB16X16 – B |
| | Bottom mount, 16” X 20” / 406.4 X 508 mm | DAMPSLB16X20 – B |

## DAMPER REPLACEMENT ACCESSORIES

| Description | | Part No. |
|---|---|---|
| Actuators | 45° Actuator for round dampers | DAMPACT45DEG – R |
| | 90° Actuator for rectangular dampers | DAMPACT90DEG – R |
| | Damper Actuator Cover | DAMPACTXXCOV |
| | Damper Control Module 1 – amp Fuse | ATO1* |

*Available from RCD.

# PRODUCT DATA INFORMATION

## Compatible Products

Air Conditioning units - 180A, 187A, 165A, 163A

Heat Pumps - 288A, 286A, 265A, 264A, 263A

Gas Furnace - 355AAV, 315AAV, 315JAV, 355BAV, 355CAV

Fan Coils - FE

Small Packaged Products - 707B, 607B, 577B, 677B, 704C, 604C, 574C, 577D, 707D, 607D, 677D

## Physical Characteristics of SYSTXBBUIZ01

**Dimensions:** See drawing

**Appearance:** Plastic, white color, textured

## Physical Characteristics of SYSTXBBSMS01

**Dimensions:** 4.0" / 101.6 mm high x 3.4" / 86.4 mm wide x 1.0" / 25.4 mm deep

**Appearance:** Plastic, white color, textured

## Physical Characteristics of SYSTXBBRRS01

**Dimensions:** 2.5" / 63.5 mm high x 3.3" / 83.8 mm wide x 0.75" / 19.1 mm deep

**Appearance:** Plastic, white color, textured

## Electrical Characteristics/Communication

**Input Volts/Amps 24VAC**

Each device in the Evolution System has a four-pin connector labeled ABCD. It is recommended that the following color code be used when wiring each device:

A — Green = Data A

B — Yellow = Data B

C — White = 24VAC (Com)

D — Red = 24VAC (Hot)

## Environmental Requirements:

**Operating Temperature/Relative Humidity:**

User interface and all sensors: 32°F to 104°F / 0°C to 40°C, 95% rh non-condensing

**Storage Temperature/Relative Humidity:**

User interface: - 40°F to 134°F / -40°C to 56.7°C, 95% rh non-condensing

Damper Control Module: -40°F to 185°F / -40°C to 85°C, 41% rh non-condensing

## Applications:

Hybrid Heat™ (Heat pump with gas furnace backup)

## Program Specifications:

Temperature setpoint range: 40°F to 90°F / 4.4°C to 32.2°C

Separate heat and cool setpoints

Programming days: 7 day

Programming periods: 2-Day, Sleep

4-Wake, Day, Eve, Sleep

Auto changeover (may be disabled)

Programmable fan (installer selectable)

Humidity Sensor Offsets

Auto Changeover Timer (installer adjustable)

Smart Recovery (in heating and cooling)

Hold function

Copy functions: Copy period, day and zone

Permanent memory

Humidity display and control

Temperature sensor offsets (indoor and outdoor)

TrueSense™ Dirty Filter Detection

## Wiring Requirements:

**Power supply:** Dedicated 24VAC, 40 va, 60 Hz, via indoor equipment ABCD Connector. Isolated transformer, field supplied.

**Wiring material:** Standard thermostat wire 18 to 24 gauge.

©2007 Bryant Heating & Cooling Systems 7310 W. Morris St. Indianapolis, IN 46231
Printed in U.S.A. Edition Date: 04/07 **Catalog No: PDSUIZ.01.3**

**Manufacturer reserves the right to discontinue, or change at any time, specifications or designs without notice and without incurring obligations.**
Replaces: PDSUIZ.01.2