25HCD3
Comfort™ 13 Heat Pump with Puron® Refrigerant 1–1/2 to 5 Nominal Tons

Carrier
turn to the experts™

Product Data

Puron™
the environmentally sound refrigerant

Comfort™ SERIES

Carrier heat pumps with Puron® refrigerant provide a collection of features unmatched by any other family of equipment. The 25HCD has been designed utilizing Carrier's Puron refrigerant. The environmentally sound refrigerant allows consumers to make a responsible decision in the protection of the earth's ozone layer.

NOTE: Ratings contained in this document are subject to change at any time. Always refer to the AHRI directory (www.ahridirectory.org) for the most up-to-date ratings information.

INDUSTRY LEADING FEATURES / BENEFITS

Efficiency

- 13.0 - 14.5 SEER/ 11.0 - 12.2 EER/ 7.7 - 8.5 HSPF
- Microtube Technology™ refrigeration system
- Indoor air quality accessories available

Sound

- Sound level as low as 69 dBA
- Sound levels as low as 69 dBA with accessory sound blanket

Comfort

- System supports Edge® Thermidistat™ or standard thermostat controls

Reliability

- Puron® refrigerant - environmentally sound, won't deplete the ozone layer and low lifetime service cost.
- Scroll compressor
- Internal pressure relief valve
- Internal thermal overload
- High pressure switch
- Loss of charge switch
- Filter drier
- Balanced refrigeration system for maximum reliability

Durability

WeatherArmor™ protection package:

- Solid, durable sheet metal construction
- Dense wire coil guard
- Baked-on powder paint

Applications

- Long-line - up to 250 feet (76.20 m) total equivalent length, up to 200 feet (60.96 m) condenser above evaporator, or up to 80 ft. (24.38 m) evaporator above condenser (See Longline Guide for more information.)
- Low ambient (down to -20°F/-28.9°C) with accessory kit

MODEL NUMBER NOMENCLATURE

1	2	3	4	5	6	7	8	9	10	11	12	13
N	N	A	A	A/N	N	N	N	A/N	A/N	A/N	N	N
2	5	H	C	D	3	3	6	A	0	0	3	0
Product Series		Product Family	Tier	Major Series	SEER	Cooling Capacity		Grille Variations	Open	Open	Voltage	Minor Series
25 = HP		H = RES HP	C=Comfort	D = Puron	3=13 SEER			A=Dense Grille	0=Not Defined	0=Not Defined	3=208/230–1 5=208/230–3 6=460/3	0, 1, 2...

Puron™
the environmentally sound refrigerant

AHRI CERTIFIED™ www.ahridirectory.org

Use of the AHRI Certified TM Mark indicates a manufacturer's participation in the program For verification of certification for individual products, go to www.ahridirectory.org.

Certified System ™
ISO 9001
QMI-SAI Global

c UL US

STANDARD FEATURES

Feature	18	24	30	36	42	48	60
Puron Refrigerant	X	X	X	X	X	X	X
Scroll Compressor	X	X	X	X	X	X	X
Field Installed Filter Drier	X	X	X	X	X	X	X
Front Seating Service Valves	X	X	X	X	X	X	X
Internal Pressure Relief Valve	X	X	X	X	X	X	X
Internal Thermal Overload	X	X	X	X	X	X	X
Long Line capability	X	X	X	X	X	X	X
Low Ambient capability with Kit	X	X	X	X	X	X	X
Suction Line Accumulator	X	X	X	X	X	X	X
High Pressure Switch	X	X	X	X	X	X	X
Loss of Charge Switch	X	X	X	X	X	X	X

X = Standard

PHYSICAL DATA

UNIT SIZE SERIES	18–30	24–30	30–30, 50	36–31, 50, 60	42–31, 50	48–31, 50, 60	60–30, 50, 60
Operating Weight lb (kg)	119 (54.1)	124 (56.4)	149 (67.7)	169 (76.7)	180 (81.6)	208 (94.3)	250 (113.4)
Shipping Weight lb (kg)	137 (62.3)	142 (64.5)	170 (77.3)	189 (85.9)	200 (90.9)	228 (103.6)	282 (127.9)
Compressor Type	Scroll						
REFRIGERANT	Puron® (R–410A)						
Indoor Control	Piston 49	Piston 57	Piston 67	Piston 70 (31) 73 (50,60)	Piston 76	Piston 80 (31) 82 (50, 60)	TXV (Puron Hard Shutoff)
Outdoor Heating Piston #	42	49	55	57	63	65	76
Charge lb (kg)	4.0 (1.81)	5.11 (2.32)	5.83 (2.64)	6.06 (2.75)	6.75 (3.06)	7.72 (3.50)	11.00 (4.99)
COND FAN	Propeller Type, Direct Drive						
Air Discharge	Vertical						
Air Qty (CFM)	1800	2100	3000	3000	3400	3400	4000
Motor HP	1/12	1/10	1/5	1/5	1/4	1/4	1/4
Motor RPM	1100	1100	1100	1100	1100	1100	800
COND COIL							
Face Area (Sq ft)	9.8	11.2	15.0	17.2	17.2	15.0	17.6
Fins per In.	20	20	20	20	20	20	20
Rows	1	1	1	1	1	2	2
Circuits	3	4	5	5	5	6	8
VALVE CONNECT. (In.) ID							
Vapor	5/8	5/8	3/4	3/4	7/8	7/8	7/8
Liquid	3/8						
REFRIGERANT TUBES (In.) OD							
Rated Vapor*	5/8	5/8	3/4	3/4	7/8	7/8	1–1/8
Liquid	3/8”						

*Units are rated with 25 ft (7.6 m) of lineset length. See *Vapor Line Sizing and Cooling Capacity Loss* table when using other sizes and lengths of lineset.

Note: See unit Installation Instruction for proper installation.

VAPOR LINE SIZING AND COOLING CAPACITY LOSS

Acceptable vapor line diameters provide adequate oil return to the compressor while avoiding excessive capacity loss. The suction line diameters shown in the chart below are acceptable for HP systems with Puron refrigerant:

Vapor Line Sizing and Cooling Capacity Losses - Puron® Refrigerant 1- Stage Heat Pump Applications

Unit Nominal Size (Btuh)	Maximum Liquid Line Diameters (In. OD)	Vapor Line Diameters (In.) OD	Cooling Capacity Loss (%) Total Equivalent Line Length ft. (m)								
			Standard Application		Long Line Application Requires Accessories						
			26–50 (7.9–15.2)	51–80 (15.5–24.4)	81–100 (24.7–30.5)	101–125 (30.8–38.1)	126–150 (38.4–45.7)	151–175 (46.0–50.3)	176–200 (53.6–60.0)	201–225 (61.3–68.6)	226–250 (68.9–76.2)
18,000 1–Stage HP with Puron	3/8	1/2	1	2	3	4	6	7	8	9	10
		5/8	0	0	1	1	1	2	2	3	3
24,000 1–Stage HP with Puron	3/8	5/8	0	1	1	2	3	3	4	4	5
		3/4	0	0	0	0	1	1	1	1	1
30,000 1–Stage HP with Puron	3/8	5/8	1	2	3	3	4	5	6	7	8
		3/4	0	0	1	1	1	2	2	2	3
		7/8	0	0	0	0	1	1	1	1	1
36,000 1–Stage HP with Puron	3/8	5/8	1	2	4	5	6	7	9	10	11
		3/4	0	0	1	1	2	2	3	3	4
		7/8	0	0	0	0	1	1	1	1	2
42,000 1–Stage HP with Puron	3/8	3/4	0	1	2	2	3	4	4	5	6
		7/8	0	0	1	1	1	2	2	2	3
48,000 1–Stage HP with Puron	3/8	3/4	0	1	2	3	4	5	5	6	7
		7/8	0	0	1	1	2	2	2	3	3
60,000 1–Stage HP with Puron	3/8	3/4	1	2	4	5	6	7	9	10	11
		7/8	0	1	2	2	3	4	4	5	5
		1–1/8	0	0	0	1	1	1	1	1	1

Standard Length = 80 ft. (24.4 m) or less total equivalent length

Applications in this area are long line. Accessories are required as shown recommended on Long Line Application Guidelines

Applications in this area may have height restrictions that limit allowable total equivalent length, when outdoor unit is below indoor unit See Long Line Application Guidelines

REFRIGERANT PIPING LENGTH LIMITATIONS

Maximum Line Lengths:

The maximum allowable total equivalent length for heat pumps varies depending on the vertical separation. See the tables below for allowable lengths depending on whether the outdoor unit is on the same level, above or below the outdoor unit.

Maximum Line Lengths for Heat Pump Applications

	MAXIMUM ACTUAL LENGTH ft (m)	MAXIMUM EQUIVALENT LENGTH† ft (m)	MAXIMUM VERTICAL SEPARATION ft (m)
Units on equal level	200 (61)	250 (76.2)	N/A
Outdoor unit ABOVE indoor unit	200 (61)	250 (76.2)	200 (61)
Outdoor unit BELOW indoor unit	See Table *'Maximum Total Equivalent Length: Outdoor Unit BELOW Indoor Unit'*		

† Total equivalent length accounts for losses due to elbows or fitting. See the Long Line Guideline for details.

25HCD3

Maximum Total Equivalent Length† - Outdoor Unit BELOW Indoor Unit

Size	Liquid Line Diameter w/ TXV	HP with Puron® Refrigerant – Maximum Total Equivalent Length† Vertical Separation ft (m) Outdoor unit BELOW indoor unit;						
		0–20 (0 – 6.1)	21–30 (6.4 – 9.1)	31–40 (9.4 – 12.2)	41–50 (12.5 – 15.2)	51–60 (15.5 – 18.3)	61–70 (18.6 – 21.3)	71–80 (21.6 – 24.4)
18000 HP with Puron	3/8	250*	250*	250*	250*	250*	250*	250*
24000 HP with Puron	3/8	250*	250*	250*	250*	250*	250*	250*
30000 HP with Puron	3/8	250*	250*	250*	250*	250*	250*	250*
36000 HP with Puron	3/8	250*	250*	250*	250*	250*	250*	250*
42000 HP with Puron	3/8	250*	250*	250*	250*	250*	250*	150
48000 HP with Puron	3/8	250*	250*	250*	250*	230	160	– –
60000 HP with Puron	3/8	250*	225*	190	150	110	– –	– –

*** Maximum actual length not to exceed 200 ft (61 m)**

† Total equivalent length accounts for losses due to elbows or fitting. See the Long Line Guideline for details.

– – = outside acceptable range

LONG LINE APPLICATIONS

An application is considered Long Line when the refrigerant level in the system requires the use of accessories to maintain acceptable refrigerant management for systems reliability. Defining a system as long line depends on the liquid line diameter, actual length of the tubing, and vertical separation between the indoor and outdoor units.

For Heat Pump systems, the chart below shows when an application is considered Long Line. Beyond these lengths, long line accessories are required:

HP WITH PURON® REFRIGERANT LONG LINE DESCRIPTION ft (m)
Beyond these lengths, long line accessories are required

Liquid Line Size	Units On Same Level	Outdoor Below Indoor	Outdoor Above Indoor
3/8	80 (24.4)	20 (6.1) vertical or 80 (24.4) total	80 (24.4)

Note: See Long Line Guideline for details

ACCESSORIES

ORDER NUMBER	DESCRIPTION	18–30	24–30	30–30	30–50	36–31	36–50	36–60	42–31	42–50	48–31	48–50	48–60	60–30	60– 50	60– 60
HC32GE234	BALL BEARING MOTOR	X														
HC34GE239	BALL BEARING MOTOR		X													
HC36GE219	BALL BEARING MOTOR			X	X	X	X									
HC34GE240	BALL BEARING MOTOR								X	X						
HC38GE232	BALL BEARING MOTOR															
HC38GE461	BALL BEARING MOTOR							X								
HC38GE228	BALL BEARING MOTOR															
HC40GE226	BALL BEARING MOTOR										X	X				
HC40GE466	BALL BEARING MOTOR												X			
HC40GE228	BALL BEARING MOTOR													X	X	
HC40GE467	BALL BEARING MOTOR															X
KAACH1701AAA	CRANKCASE HTR	X	X	X		X										
KAACH1601AAA	CRANKCASE HTR								X							
STANDARD	CRANKCASE HTR				S		S	S		S	S	S	S	S	S	S
KSACY0101AAA	CYCLE PROTECTOR	X	X	X	X	X	X	X	X	X	X	X	X	X	X	X
KAAFT0101AAA	FREEZE THERMOSTAT	X	X	X	X	X	X	X	X	X	X	X	X	X	X	X
KSAHS1701AAA	HARD START	X	X	X		X			X		X			X		X
KHAIR0101AAA	ISOLATION RELAY	X	X	X	X	X	X	X	X	X	X	X	X	X	X	X
KSALA0301410	LOW AMBIENT PSW	X	X	X	X	X	X	X	X	X	X	X	X	X	X	X
KSALA0601AAA†	MOTORMASTER 230V	X	X	X	X	X	X	X	X	X	X	X	X	X	X	X
KHAOT0201SEC	OUTDOOR THERMOSTAT	X	X	X	X	X	X	X	X	X	X	X	X	X	X	X
KHAOT0301FST	OUTDOOR THERMOSTAT	X	X	X	X	X	X	X	X	X	X	X	X	X	X	X
KHALS0401LLS	SOLENOID VALVE	X	X	X	X	X	X	X	X	X	X	X	X	X	X	X
KHASS0606MPK*	SNOW STAND RACK		X	X	X	X	X	X	X	X	X	X	X	X	X	X
KSASH0601COP	SOUND BLKT	X	X	X	X	X	X	X	X	X	X	X	X			
KSASH2101COP	SOUND BLKT													X	X	X
KAACS0201PTC	START ASSIST PTC	X	X	X	X	X	X	X	X	X	X	X	X	X	X	X
KSASF0101AAA	SUPPORT FEET	X	X	X	X	X	X	X	X	X	X	X	X	X	X	X
KAATD0101TDR	TIME DELAY RELAY	X	X	X	X	X	X	X	X	X	X	X	X	X	X	X
KSATX0201PUR	TXV PURON HSO	X	X	X	X											
KSATX0301PUR	TXV PURON HSO					X	X	X	X	X						
KSATX0401PUR	TXV PURON HSO										X	X	X			
KSATX0501PUR	TXV PURON HSO													X	X	X

x = Accessory S = Standard

* Available through RCD

† Required accessories include ball bearing fan motor, compressor start assist (CAP / Relay), crankcase heater, evaporator freeze stat, isolation relay, hard shut–off TXV or liquid line solenoid valve.

ACCESSORY THERMOSTATS

PART NUMBER	PROGRAM	GAS	ELECTRIC	HEAT PUMP	HEAT	COOL
TC–PHP01	5–2 Day		√	√	3	2
TC–NHP01	NP		√	√	3	2
TCSNHP01	NP		√	√	2	1
TB–PHP01	5–2 Day	√	√	√	2	1
TB–NHP01	NP	√	√	√	2	1

THERMOSTAT ACCESSORIES		
PART NUMBER	BRIEF DESCRIPTION	THERMOSTATS USED WITH
TSTATXXCNV10‡	Thermostat Conversion Kit (4 to 5 wire) – 10 pack	All Carrier® branded thermostats
TX–LBP01	Large Decorative Backplate	TP–Pxx, TP–Nxx, TC–Pxx
TX–MBP01	Medium Decorative Backplate	TC–Nxx, TB–Pxx
TX–SBP01	Small Decorative Backplate	TB–Nxx

ACCESSORY USAGE GUIDELINE

Accessory	REQUIRED FOR LOW–AMBIENT COOLING APPLICATIONS (Below 55°F / 12.8°C)	REQUIRED FOR LONG LINE APPLICATIONS*	REQUIRED FOR SEA COAST APPLICATIONS (Within 2 miles / 3.22 km)
Accumulator	Standard	Standard	Standard
Ball Bearing Fan Motor	Yes†	No	No
Compressor Start Assist Capacitor and Relay	Yes	Yes	No
Crankcase Heater	Yes	Yes	No
Evaporator Freeze Thermostat	Yes	No	No
Hard Shutoff TXV	Yes	Yes	Yes
Isolation Relay	Yes	No	No
Liquid Line Solenoid Valve	No	See Long–Line Application Guideline	No
Motor Master® Control or Low Ambient Switch	Yes	No	No
Support Feet	Recommended	No	Recommended

* For tubing line sets between 80 and 200 ft. (24.38 and 60.96 m) and/or 20 ft. (6.09 m) vertical differential, refer to Residential Split–System Longline Application Guideline.

† Additional requirement for Low–Ambient Controller (full modulation feature) MotorMaster® Control.

Accessory Description and Usage (Listed Alphabetically)

1. Ball-Bearing Fan Motor

A fan motor with ball bearings which permits speed reduction while maintaining bearing lubrication.

Usage Guideline:

Required on all units when using MotorMaster®

2. Compressor Start Assist - Capacitor and Relay

Start capacitor and relay gives a ”hard” boost to compressor motor at each start up.

Usage Guideline:

Required for reciprocating compressors in the following applications:

Long line

Low ambient cooling

Hard shut off expansion valve on indoor coil

Liquid line solenoid on indoor coil

Required for single-phase scroll compressors in the following applications:

Long line

Low ambient cooling

Suggested for all compressors in areas with a history of low voltage problems.

3. Compressor Start Assist — PTC Type

Solid state electrical device which gives a ”soft” boost to the compressor at each start-up.

Usage Guideline:

Suggested in installations with marginal power supply.

4. Crankcase Heater

An electric resistance heater which mounts to the base of the compressor to keep the lubricant warm during off cycles. Improves compressor lubrication on restart and minimizes the chance of liquid slugging.

Usage Guideline:

Required in low ambient cooling applications.

Required in long line applications.

Suggested in all commercial applications.

5. Evaporator Freeze Thermostat

An SPST temperature-actuated switch that stops unit operation when evaporator reaches freeze-up conditions.

Usage Guideline:

Required when low ambient kit has been added.

6. Isolation Relay

An SPDT relay which switches the low-ambient controller out of the outdoor fan motor circuit when the heat pump switches to heating mode.

Usage Guideline:

Required in all heat pumps where low ambient kit has been added.

7. Liquid-Line Solenoid Valve (LLS)

An electrically operated shutoff valve which stops and starts refrigerant liquid flow in response to compressor operation. It is to be installed at the outdoor unit to control refrigerant off cycle migration in the heating mode.

Usage Guideline:

An LLS is required in all long line heat pump applications to control refrigerant off cycle migration in the heating mode. See Long Line Guideline.

8. Low-Ambient Pressure Switch Kit

A long life pressure switch which is mounted to outdoor unit service valve. It is designed to cycle the outdoor fan motor in order to maintain head pressure within normal operating limits. The control will maintain working head pressure at low-ambient temperatures down to 0°F (-18°C) when properly installed.

Usage Guideline:

A Low-Ambient Pressure Switch or MotorMaster® Low-Ambient Controller must be used when cooling operation is used at outdoor temperatures below 55°F (12.8°C).

9. MotorMaster® Low-Ambient Controller

A fan-speed control device activated by a temperature sensor, designed to control condenser fan motor speed in response to the saturated, condensing temperature during operation in cooling mode only. For outdoor temperatures down to -20°F (-28.9°C), it maintains condensing temperature at 100°F ±10°F (37.8°C ± 6.5°C).

Usage Guideline:

A MotorMaster® Low Ambient Controller or Low-Ambient Pressure Switch must be used when cooling operation is used at outdoor temperatures below 55°F (12.8°C).

Suggested for all commercial applications.

10. Outdoor Air Temperature Sensor

Designed for use with Carrier Thermostats listed in this publication. This device enables the thermostat to display the outdoor temperature. This device also is required to enable special thermostat features such as auxiliary heat lock out.

Usage Guideline:

Suggested for all Carrier thermostats listed in this publication.

11. Outdoor Thermostat

An SPDT temperature-actuated switch which turns on supplemental electric heaters when outdoor air temperature drops below a user-selected set point.

Usage Guideline:

Electric supplemental heat applications in non-variable speed indoor units when electric heat staging is desired.

12. Secondary Outdoor Thermostat

An SPDT temperature-actuated switch which turns on third-stage of supplemental electric heaters when outdoor air temperature drops below the second-stage set point.

Usage Guideline:

Outdoor thermostat applications where electric heater is capable of 3-stage operation.

13. Snow Stand Rack

Coated wire rack which supports unit 18 in. (457.2 mm) above mounting pad to allow for drainage from unit base.

Usage Guideline:

Suggested in the following applications:

Heat pump installations in heavy snowfall areas.

Heat pump installations in snow drift locations.

Heat pump installations in areas of prolonged subfreezing temperatures.

All commercial installations.

14. Sound Hood

Wraparound sound reducing cover for the compressor. Reduces the sound level by about 2 dBA.

Usage Guideline:

Suggested when unit is installed closer than 15 ft. (4.577 m) to quiet areas, bedrooms, etc.

Suggested when unit is installed between two houses less than 10 ft. (3.05 m) apart.

15. Thermostatic Expansion Valve (TXV) Bi-Flow

A modulating flow-control valve which meters refrigerant liquid flow rate into the evaporator in response to the superheat of the refrigerant gas leaving the evaporator.

Usage Guideline:

Accessory required to meet AHRI rating and system reliability, where indoor not equipped.

Required in all heat pump applications designed with Puron refrigerant.

16. Time-Delay Relay

An SPST delay relay which briefly continues operation of indoor blower motor to provide additional cooling after the compressor cycles off.

Note: Most indoor unit controls include this feature. For those that do not, use the guideline below.

Usage Guideline:

Accessory required to meet AHRI rating, where indoor not equipped.

ELECTRICAL DATA

UNIT SIZE	V/PH	OPER VOLTS*		COMPR		FAN	MCA	MIN WIRE SIZE†	MIN WIRE SIZE†	MAX LENGTH ft (m)‡	MAX LENGTH ft (m)‡	MAX FUSE** or CKT BRK AMPS
		MAX	MIN	LRA	RLA	FLA		60° C	75° C	60° C	75° C	
18–30	208/230/1	253	197	48.0	9.0	0.5	11.8	14	14	66 (20.1)	62 (18.9)	20
24–30				58.3	12.8	0.77	16.8	14	14	46 (14.0)	44 (13.4)	25
30–30				77.0	16.0	1.1	21.1	12	12	57 (17.4)	54 (16.5)	30
36–31				70.0	15.6	1.1	20.6	12	12	60 (18.3)	57 (17.4)	35
42–31				96.0	18.0	1.4	23.9	12	12	52 (15.8)	50 (15.2)	40
48–31				99.0	21.8	1.4	28.7	10	10	69 (21.0)	66 (20.1)	45
60–30				134.0	26.3	1.2	34.1	8	8	89 (27.1)	84 (25.6	50
30–50	208/230/3	253	197	71.0	10.0	1.1	13.6	14	14	65 (19.8)	62 (18.9)	20
36–50				73.0	10.4	1.1	14.1	14	14	61 (18.6)	58 (17.7)	20
42–50				83.1	13.6	1.4	18.4	14	14	48 (14.6)	46 (14.0)	30
48–50				83.1	13.8	1.4	18.7	14	14	48 (14.6)	46 (14.0)	30
60–50				110.0	15.9	1.2	21.1	12	12	66 (20.1)	63 (19.2)	30
36–60	460/3	253	197	38.0	5.8	0.6	7.9	14	14	227 (69.2)	216 (65.8)	10
48–60				41.0	6.2	0.7	8.5	14	14	202 (61.6)	192 (58.5)	10
60–60				52.0	7.8	0.6	10.4	14	14	165 (50.3)	157 (47.9)	15

* Permissible limits of the voltage range at which the unit will operate satisfactorily

† If wire is applied at ambient greater than 30°C, consult table 310–16 of the NEC (NFPA 70). The ampacity of non–metallic–sheathed cable (NM), trade name ROMEX, shall be that of 60°C conditions, per the NEC (NFPA 70) Article 336–26. If other than uncoated (no–plated), 60 or 75°C insulation, copper wire (solid wire for 10 AWG or smaller, stranded wire for larger than 10 AWG) is used, consult applicable tables of the NEC (NFPA 70).

‡ Length shown is as measured 1 way along wire path between unit and service panel for voltage drop not to exceed 2%.

** Time–Delay fuse.

FLA – Full Load Amps
LRA – Locked Rotor Amps
MCA – Minimum Circuit Amps
RLA – Rated Load Amps

NOTE: Control circuit is 24–V on all units and requires external power source. Copper wire must be used from service disconnect to unit.
All motors/compressors contain internal overload protection.
Complies with 2007 requirements of ASHRAE Standards 90.1

A-WEIGHTED SOUND POWER

UNIT SIZE	STANDARD RATING (dBA)	TYPICAL OCTAVE BAND SPECTRUM (dBA, without tone adjustment)						
		125	250	500	1000	2000	4000	8000
18–30	69	49.0	57.0	63.0	65.0	61.0	57.5	52.5
24–30	73	51.0	59.5	66.0	68.5	63.5	59.0	53.0
30–30, 50	74	52.5	64.0	68.0	69.0	67.0	64.5	58.5
36–31	73	50.5	62.5	67.0	68.5	66.5	63.5	58.0
36–50, 60	75	53.5	63.0	69.0	71.0	67.0	63.5	58.0
42–31	77	55.0	65.0	71.0	72.0	70.0	67.0	59.5
42–50	79	55.0	67.0	71.0	74.5	70.0	67.0	60.0
48–31	80	59.0	67.0	72.5	75.0	73.5	69.5	61.5
48–50, 60	80	59.5	69.5	74.0	76.0	72.5	69.5	64.5
60–30, 50, 60	77	55.0	63.0	67.5	71.5	68.0	64.0	60.5

NOTE: Tested in accordance with AHRI Standard 270–08 (not listed in AHRI).

A-WEIGHTED SOUND POWER WITH SOUND HOOD

UNIT SIZE	STANDARD RATING (dBA)	TYPICAL OCTAVE BAND SPECTRUM (dBA, without tone adjustment)						
		125	250	500	1000	2000	4000	8000
18–30	69	50.0	57.0	63.0	64.5	61.0	57.0	51.0
24–30	71	51.5	59.0	65.5	67.5	63.0	58.5	53.0
30–30, 50	73	53.0	64.0	68.0	68.0	66.5	63.5	57.0
36–31	73	52.0	63.0	66.5	68.0	65.5	62.5	56.5
36–50, 60	74	54.0	63.5	68.5	70.0	66.0	63.0	57.0
42–31	77	55.0	65.5	71.0	72.0	70.0	66.0	59.5
42–50	78	56.0	67.0	71.0	73.5	69.5	66.5	60.0
48–31	79	60.0	66.5	72.5	74.5	73.5	69.0	61.0
48–50, 60	79	58.5	69.0	73.5	74.5	71.5	68.0	62.0
60–30, 50, 60	74	55.0	63.5	67.0	69.0	66.5	62.0	57.0

NOTE: Tested in accordance with AHRI Standard 270–08 (not listed in AHRI).

CHARGING SUBCOOLING (TXV-TYPE EXPANSION DEVICE)

UNIT SIZE–SERIES	REQUIRED SUBCOOLING* °F (°C)
18–30	13 (7.2)
24–30	13 (7.2)
30–30, 50	9 (5.0)
36–31	14 (7.8)
36–50, 60	9 (5.0)
42–31	15 (8.3)
42–50	13 (7.2)
48–31	17 (9.4)
48–50, 60	13 (7.2)
60–30, 50, 60	15 (8.3)

NOTE: Subcooling is for field installed TXV (except for 060)

DIMENSIONS - ENGLISH

UNIT	SERIES	ELECTRICAL CHARACTERISTICS				A	B	C	D	E	F	G	K	L	M	N	P	OPERATING WEIGHT (lbs)	SHIPPING WEIGHT (lbs)	SHIPPING DIMENSIONS (L x W x H)
25HCD318	0	X	O	O	O	23 1/8"	28 7/16"	3 3/4"	5/8"	4 7/16"	18 1/16"	7 13/16"	2 13/16"	1/2"	11 1/2"	10 1/2"	11 1/2"	119	137	24 1/8" X 24 1/8" X 30 5/8"
25HCD324	0	X	O	O	O	23 1/8"	31 13/16"	3 3/4"	3/4"	4 7/16"	18 1/16"	7 13/16"	2 13/16"	1/2"	11 1/2"	10 1/2"	12 1/2"	124	142	24 1/8" X 24 1/8" X 34"
25HCD330	0	X	O	X	O	31 3/16"	28 7/16"	3 3/4"	3/4"	6 9/16"	24 11/16"	9 1/8"	2 15/16"	5/8"	15"	15"	11 1/2"	149	170	32 3/16" X 32 3/16" X 30 5/8"
25HCD336	1	X	O	O	O	31 3/16"	31 13/16"	3 7/8"	7/8"	6 9/16"	24 11/16"	9 1/8"	2 15/16"	5/8"	15"	15"	12 1/2"	169	189	32 3/16" X 32 3/16" X 34"
25HCD336	0	O	O	X	X	31 3/16"	31 13/16"	3 7/8"	7/8"	6 9/16"	24 11/16"	9 1/8"	2 15/16"	5/8"	15"	15"	12 1/2"	169	189	32 3/16" X 32 3/16" X 34"
25HCD342	1	X	O	O	O	31 3/16"	31 13/16"	3 7/8"	7/8"	6 9/16"	24 11/16"	9 1/8"	2 15/16"	5/8"	15"	15"	12 1/2"	180	200	32 3/16" X 32 3/16" X 34"
25HCD342	0	O	O	X	O	31 3/16"	31 13/16"	3 7/8"	7/8"	6 9/16"	24 11/16"	9 1/8"	2 15/16"	5/8"	15"	15"	12 1/2"	180	200	32 3/16" X 32 3/16" X 34"
25HCD348	1	X	O	O	O	31 3/16"	28 7/16"	3 7/8"	7/8"	6 9/16"	24 11/16"	9 1/8"	2 15/16"	5/8"	15"	15"	11 1/2"	208	228	32 3/16" X 32 3/16" X 30 5/8"
25HCD348	0	O	O	X	X	31 3/16"	28 7/16"	3 7/8"	7/8"	6 9/16"	24 11/16"	9 1/8"	2 15/16"	5/8"	15"	15"	11 1/2"	208	228	32 3/16" X 32 3/16" X 30 5/8"
25HCD360	0	X	O	X	X	35"	28 15/16"	3 7/8"	7/8"	6 9/16"	28 7/16"	9 1/8"	2 15/16"	5/8"	17"	16"	12"	250	282	36 1/8" X 39 5/16" X 32 9/16"

208-230-1-60	230-1-60	208/230-3-60	460-3-60

X = YES
O = NO

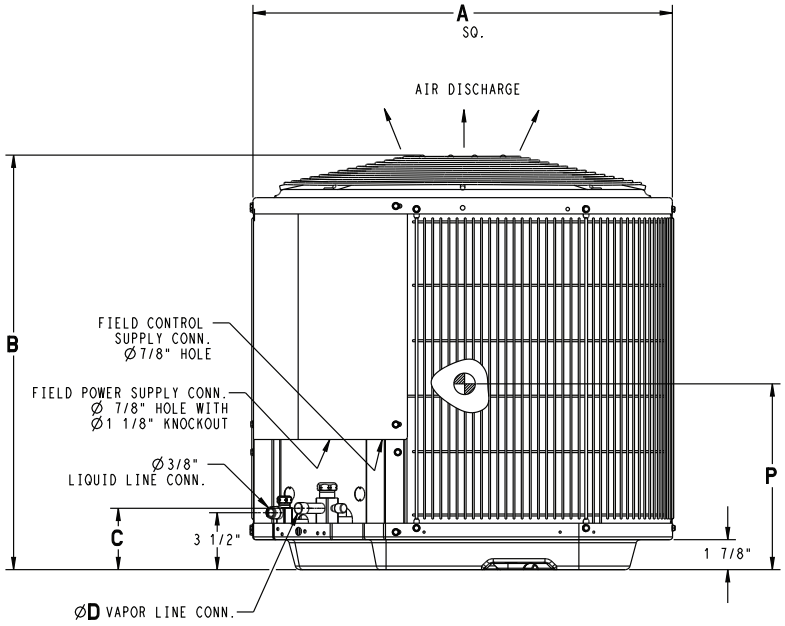

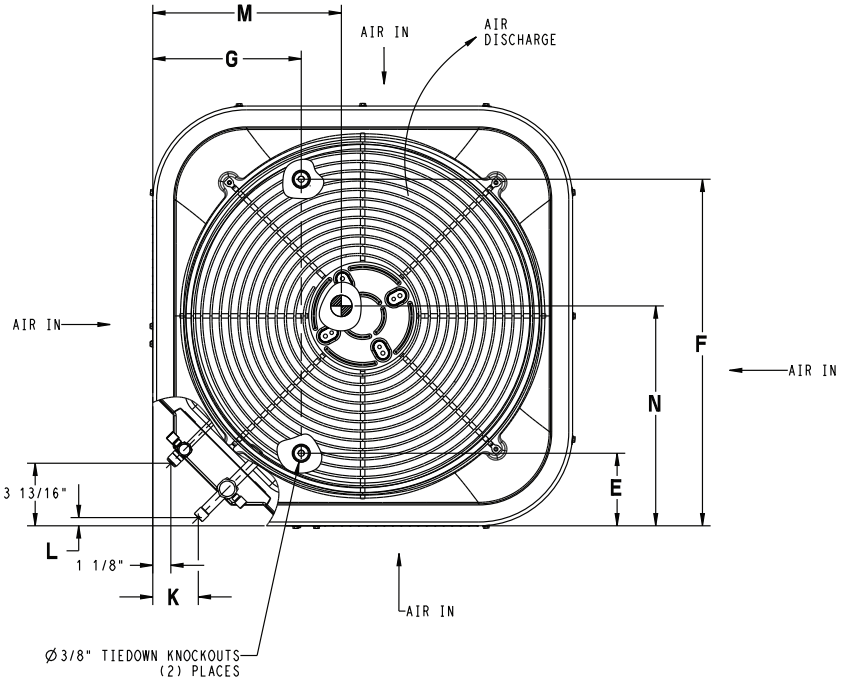

UNIT SIZE	MINIMUM MOUNTING PAD DIMENSIONS
18,24	23 1/2" X 23 1/2'
30,36,42,48	31 1/2" X 31 1/2"
60	35" X 35"

DIMENSIONS - SI

UNIT	SERIES	ELECTRICAL CHARACTERISTICS				A	B	C	D	E	F	G	K	L	M	N	P	OPERATING WEIGHT (Kgs)	SHIPPING WEIGHT (Kgs)	SHIPPING DIMENSIONS (L x W x H)
25HCD318	0	X	O	O	O	587.4	722.3	95.2	15.9	112.7	458.8	198.4	71.4	12.7	292.1	266.7	292.1	54.1	62.3	612.8 X 612.8 X 777.9
25HCD324	0	X	O	O	O	587.4	808.0	95.2	19.0	112.7	458.8	198.4	71.4	12.7	292.1	266.7	317.5	56.4	64.5	612.8 X 612.8 X 863.6
25HCD330	0	X	O	X	O	792.2	722.3	95.2	19.0	166.7	627.1	231.8	74.6	15.9	381.0	381.0	292.1	67.7	77.3	817.6 X 817.6 X 777.9
25HCD336	1	X	O	O	O	792.2	808.0	98.4	22.2	166.7	627.1	231.8	74.6	15.9	381.0	381.0	317.5	76.7	85.9	817.6 X 817.6 X 863.6
25HCD336	0	O	O	X	X	792.2	808.0	98.4	22.2	166.7	627.1	231.8	74.6	15.9	381.0	381.0	317.5	76.7	85.9	817.6 X 817.6 X 863.6
25HCD342	1	X	O	O	O	792.2	808.0	98.4	22.2	166.7	627.1	231.8	74.6	15.9	381.0	381.0	317.5	81.8	90.9	817.6 X 817.6 X 863.6
25HCD342	0	O	O	X	O	792.2	808.0	98.4	22.2	166.7	627.1	231.8	74.6	15.9	381.0	381.0	317.5	81.8	90.9	817.6 X 817.6 X 863.6
25HCD348	1	X	O	O	O	792.2	722.3	98.4	22.2	166.7	627.1	231.8	74.6	15.9	381.0	381.0	292.1	94.5	103.6	817.6 X 817.6 X 777.9
25HCD348	0	O	O	X	X	792.2	722.3	98.4	22.2	166.7	627.1	231.8	74.6	15.9	381.0	381.0	292.1	94.5	103.6	817.6 X 817.6 X 777.9
25HCD360	0	X	O	X	X	889.0	735.0	98.4	22.2	166.7	722.3	231.8	74.6	15.9	431.8	406.4	304.8	113.4	127.9	917.6 X 998.6 X 827.1
		208-230-1-60	230-1-60	208/230-3-60	460-3-60															

X = YES
O = NO

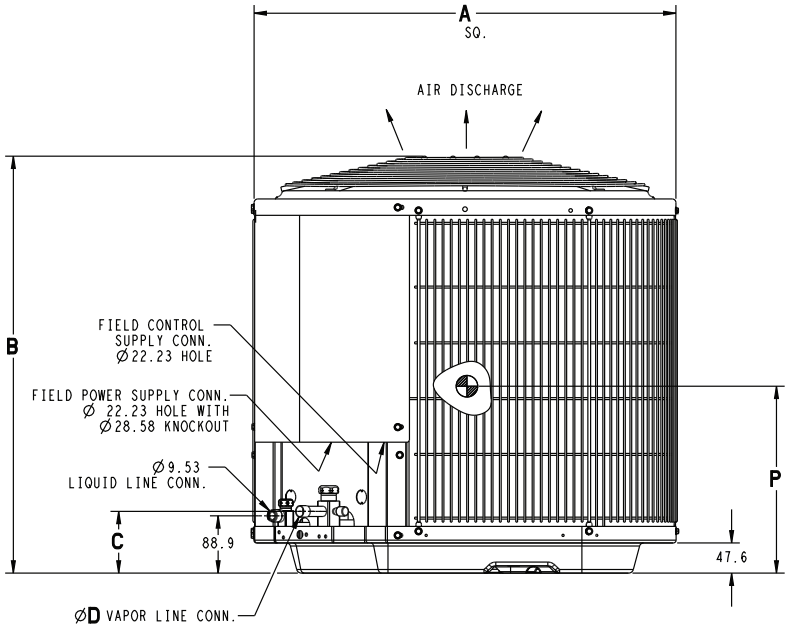

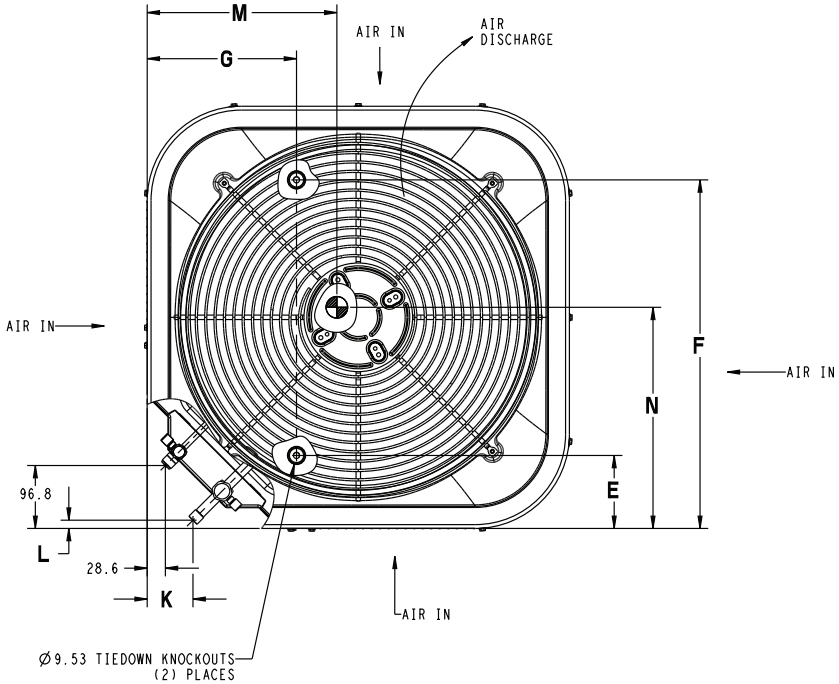

UNIT SIZE	MINIMUM MOUNTING PAD DIMENSIONS
18,24	596.9 X 596.9
30,36,42,48	800.1 X 800.1
60	889.0 X 889.0

25HCD3 BALANCE POINT WORKSHEET

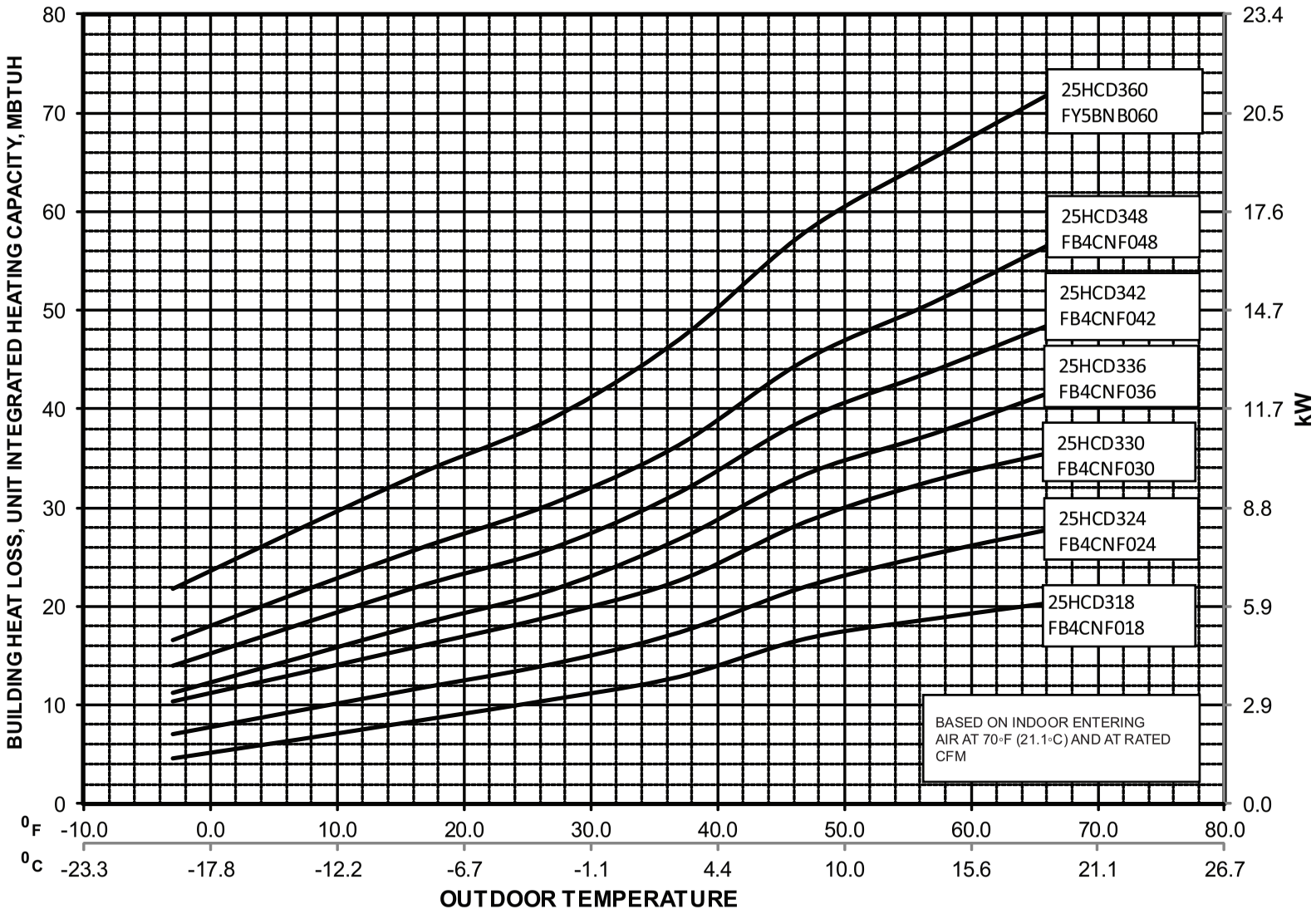

CLEARANCES

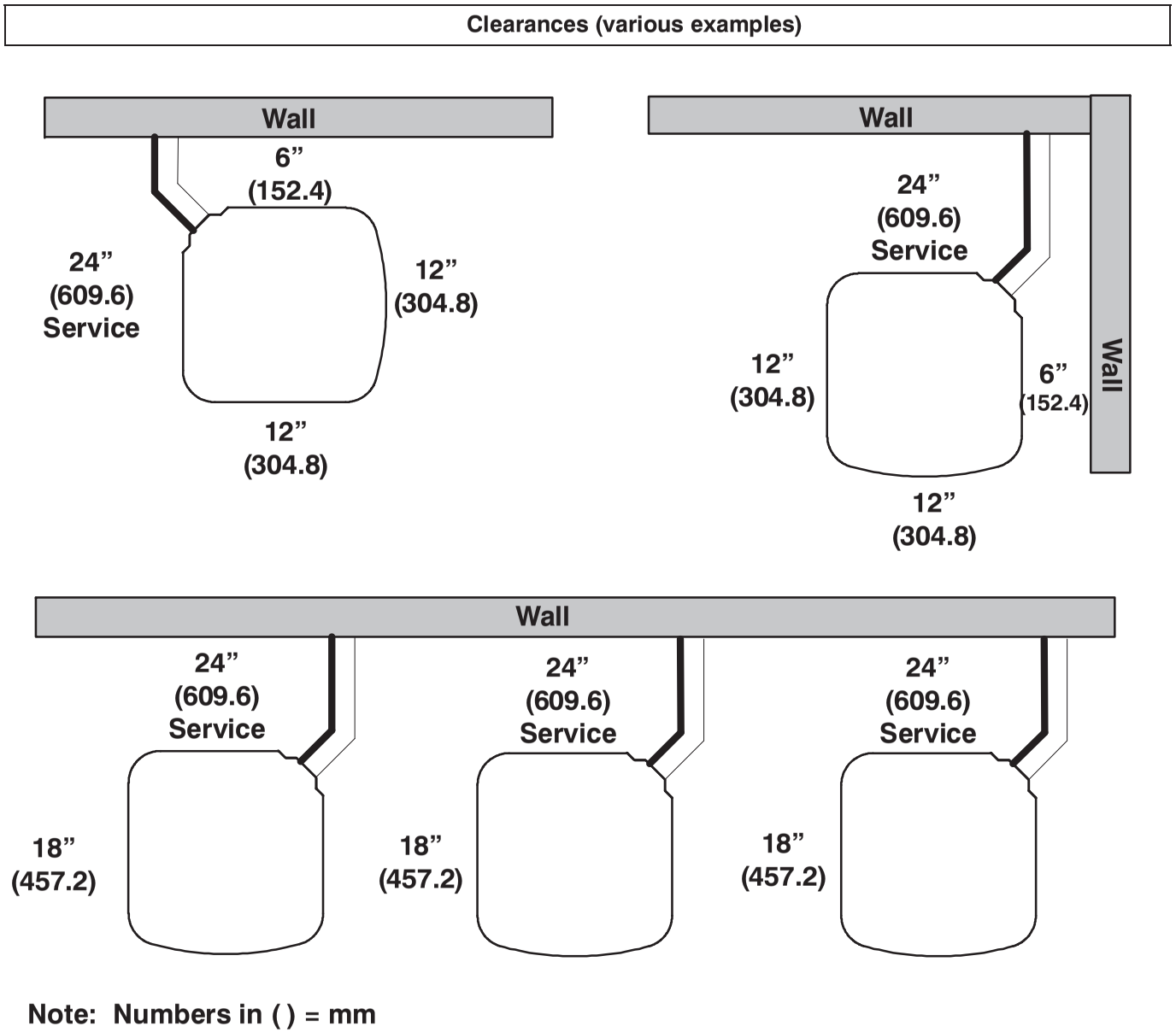

Note: Numbers in ( ) = mm

IMPORTANT: When installing multiple units in an alcove, roof well, or partially enclosed area, ensure there is adequate ventilation to prevent re-circulation of discharge air.

TESTED AHRI* COMBINATION RATINGS

NOTE: Ratings contained in this document are subject to change at any time.

For AHRI ratings certificates, please refer to the AHRI directory www.ahridirectory.org

Additional ratings and system combinations can be accessed via the Carrier database at: www.MyCarrierRatings.com

For performance data at specific application &/or design conditions with various indoor unit combinations, the equipment performance calculator can be accessed at : http://rpmob.wrightsoft.com/

Model Number	Coil Model Number	Furnace Model Number	Cooling Capacity	EER	SEER	High Temp		HSPF	Low Temp	
						Capacity 47˚F (8°C)	COP		Capacity 17˚F (−8°C)	COP
25HCD318(A,W)**30	FB4CNF018		17,400	11.0	13.0	16,700	3.60	7.7	9,400	2.24
25HCD324(A,W)**30	FB4CNF024		23,400	11.0	13.0	22,000	3.48	7.7	13,000	2.28
25HCD330(A,W)**30	FB4CNF030		28,600	11.0	13.0	29,600	3.50	7.7	17,700	2.34
25HCD330(A,W)**50	FB4CNF030		28,600	11.0	13.0	29,600	3.50	7.7	17,700	2.34
25HCD336(A,W)**31	FB4CNF036		33,600	11.0	13.0	33,000	3.50	7.7	20,200	2.40
25HCD336(A,W)**50	FB4CNF036		33,600	11.0	13.0	33,000	3.54	7.7	20,200	2.40
25HCD336(A,W)**60	FB4CNF036		33,600	11.0	13.0	33,000	3.54	7.7	20,200	2.40
25HCD342(A,W)**31	FB4CNF042		42,000	11.0	13.0	39,500	3.60	8.0	24,400	2.40
25HCD342(A,W)**50	FB4CNF042		42,000	11.0	13.0	39,500	3.62	8.0	24,000	2.44
25HCD348(A,W)**31	FB4CNF048		47,000	11.0	13.0	45,000	3.48	8.0	28,600	2.44
25HCD348(A,W)**50	FB4CNF048		47,000	11.0	13.0	45,000	3.58	8.0	28,200	2.50
25HCD348(A,W)**60	FB4CNF048		47,000	11.0	13.0	45,000	3.58	8.0	28,200	2.50
25HCD360(A,W)**30	FY5BNB060		58,500	10.8	13.0	57,000	3.52	7.7	37,000	2.50
25HCD360(A,W)**50	FY5BNB060		58,500	10.8	13.0	57,000	3.52	7.7	37,000	2.50
25HCD360(A,W)**60	FY5BNB060		58,500	10.8	13.0	57,000	3.52	7.7	37,000	2.50

* AHRI = Air Conditioning, Heating & Refrigeration Institute

* Ratings are net values reflecting the effects of circulating fan heat. Supplemental electric heat is not included. Ratings are based on:

Cooling Standard: 80°F (27°C) db 67°F (19°C) wb indoor entering air temperature and 95°F (35°C) db air entering outdoor unit.

High−Temp Heating Standard: 70°F (21°C) db indoor entering air temperature and 47°F (8°C) db 43°F (6°C) wb air entering outdoor unit.

Low−Temp Heating Standard: 70°F (21°C) db indoor entering air temperature and 17°F (−8°C) db 15°F (−9°C) wb air entering outdoor unit.

COP — Coefficient of Performance

EER — Energy Efficiency Ratio

HSPF — Heating Seasonal Performance Factor

SEER — Seasonal Energy Efficiency Ratio

DETAILED COOLING CAPACITIES#

EVAPORATOR AIR		CONDENSER ENTERING AIR TEMPERATURES °F (°C)																	
		75 (23.9)			85 (29.4)			95 (35)			105 (40.6)			115 (46.1)			125 (51.7)		
CFM	EWB °F (°C)	Capacity MBtuh		Total System KW**	Capacity MBtuh		Total System KW**	Capacity MBtuh		Total System KW**	Capacity MBtuh		Total System KW**	Capacity MBtuh		Total System KW**	Capacity MBtuh		Total System KW**
		Total	Sens‡		Total	Sens‡		Total	Sens‡		Total	Sens‡		Total	Sens‡		Total	Sens‡	
25HCD318(A,W)**30 Outdoor Section With FB4CNF018 Indoor Section																			
525	57 (13.9)	16.65	16.65	1.22	15.93	15.93	1.37	14.83	14.83	1.52	13.70	13.70	1.70	12.53	12.53	1.90	11.26	11.26	2.13
	62 (16.7)	17.30	15.33	1.22	16.38	14.89	1.37	15.05	14.24	1.52	13.73	13.73	1.70	12.55	12.55	1.90	11.28	11.28	2.13
	63 (17.2)††	17.67	12.51	1.22	16.71	12.09	1.38	15.42	11.53	1.53	13.80	10.84	1.70	12.20	10.17	1.89	10.50	9.46	2.11
	67 (19.4)	19.21	13.04	1.23	18.18	12.64	1.39	17.04	12.18	1.56	15.53	11.58	1.73	13.75	10.89	1.92	11.97	10.20	2.14
	72 (22.2)	21.16	10.63	1.25	20.17	10.28	1.41	19.02	9.88	1.59	17.68	9.38	1.79	16.09	8.82	1.99	14.07	8.12	2.19
600	57 (13.9)	17.43	17.43	1.24	16.66	16.66	1.39	15.79	15.79	1.56	14.44	14.44	1.72	13.17	13.17	1.92	11.83	11.83	2.15
	62 (16.7)	17.78	16.48	1.24	16.83	15.99	1.39	15.81	15.81	1.56	14.46	14.46	1.72	13.20	13.20	1.92	11.85	11.85	2.15
	63 (17.2)††	18.10	13.33	1.24	17.09	12.90	1.39	15.97	12.42	1.56	14.16	11.66	1.71	12.51	10.97	1.91	10.78	10.19	2.13
	67 (19.4)	19.65	13.89	1.25	18.59	13.51	1.41	17.40	13.04	1.58	16.09	12.53	1.77	14.10	11.76	1.94	12.26	11.03	2.16
	72 (22.2)	21.57	11.12	1.26	20.56	10.79	1.43	19.41	10.41	1.61	18.06	9.95	1.80	16.50	9.40	2.02	14.39	8.68	2.21
675	57 (13.9)	18.11	18.11	1.25	17.28	17.28	1.41	16.38	16.38	1.58	15.09	15.09	1.75	13.73	13.73	1.94	12.32	12.32	2.17
	62 (16.7)	18.22	17.49	1.25	17.31	17.31	1.41	16.41	16.41	1.58	15.12	15.12	1.75	13.75	13.75	1.95	12.34	12.34	2.17
	63 (17.2)††	18.46	14.11	1.25	17.39	13.67	1.41	16.24	13.18	1.58	14.48	12.44	1.73	12.78	11.70	1.93	11.09	11.09	2.15
	67 (19.4)	19.98	14.69	1.26	18.91	14.33	1.42	17.69	13.87	1.60	16.35	13.35	1.79	14.38	12.58	1.96	12.51	11.79	2.18
	72 (22.2)	21.88	11.57	1.28	20.86	11.27	1.44	19.69	10.90	1.62	18.34	10.46	1.82	16.73	9.90	2.04	14.63	9.20	2.23

EVAPORATOR AIR		CONDENSER ENTERING AIR TEMPERATURES °F (°C)																	
		75 (23.9)			85 (29.4)			95 (35)			105 (40.6)			115 (46.1)			125 (51.7)		
CFM	EWB °F (°C)	Capacity MBtuh		Total System KW**	Capacity MBtuh		Total System KW**	Capacity MBtuh		Total System KW**	Capacity MBtuh		Total System KW**	Capacity MBtuh		Total System KW**	Capacity MBtuh		Total System KW**
		Total	Sens‡		Total	Sens‡		Total	Sens‡		Total	Sens‡		Total	Sens‡		Total	Sens‡	
25HCD324(A,W)**30 Outdoor Section With FB4CNF024 Indoor Section																			
700	57 (13.9)	22.27	22.27	1.62	21.36	21.36	1.82	20.01	20.01	2.01	18.55	18.55	2.25	17.03	17.03	2.51	15.40	15.40	2.81
	62 (16.7)	23.17	20.79	1.63	22.02	20.23	1.83	20.58	19.52	2.03	18.58	18.58	2.25	17.06	17.06	2.51	15.42	15.42	2.81
	63 (17.2)††	23.65	16.96	1.63	22.45	16.42	1.83	21.09	15.82	2.05	18.86	14.86	2.25	16.76	13.96	2.50	14.55	13.00	2.79
	67 (19.4)	25.62	17.65	1.66	24.33	17.13	1.86	22.96	16.57	2.09	21.15	15.84	2.32	18.89	14.94	2.55	16.55	14.01	2.83
	72 (22.2)	28.04	14.27	1.70	26.88	13.86	1.91	25.54	13.37	2.14	23.99	12.83	2.40	22.07	12.12	2.68	19.47	11.20	2.92
800	57 (13.9)	23.24	23.24	1.65	22.28	22.28	1.86	21.18	21.18	2.08	19.52	19.52	2.29	17.86	17.86	2.55	16.14	16.14	2.85
	62 (16.7)	23.74	22.26	1.66	22.55	21.65	1.86	21.23	21.23	2.08	19.55	19.55	2.29	17.89	17.89	2.55	16.17	16.17	2.85
	63 (17.2)††	24.17	18.01	1.67	22.92	17.47	1.87	21.53	16.86	2.08	19.35	15.93	2.29	17.13	14.97	2.54	14.90	13.98	2.82
	67 (19.4)	26.14	18.72	1.69	24.87	18.26	1.90	23.40	17.68	2.13	21.78	17.03	2.37	19.36	16.08	2.59	16.93	15.10	2.87
	72 (22.2)	28.50	14.87	1.73	27.33	14.48	1.94	25.98	14.01	2.17	24.43	13.49	2.43	22.48	12.81	2.71	19.90	11.92	2.97
900	57 (13.9)	24.05	24.05	1.69	23.03	23.03	1.89	21.91	21.91	2.12	20.37	20.37	2.34	18.61	18.61	2.60	16.76	16.76	2.89
	62 (16.7)	24.25	23.56	1.69	23.07	23.07	1.89	21.94	21.94	2.12	20.40	20.40	2.34	18.64	18.64	2.60	16.81	16.81	2.89
	63 (17.2)††	24.60	19.04	1.69	23.29	18.48	1.90	21.88	17.87	2.12	19.70	16.93	2.32	17.49	15.95	2.57	15.23	14.83	2.85
	67 (19.4)	26.54	19.73	1.72	25.26	19.31	1.93	23.76	18.77	2.16	22.10	18.10	2.41	19.74	17.16	2.63	17.27	16.11	2.90
	72 (22.2)	28.85	15.42	1.76	27.68	15.06	1.97	26.31	14.61	2.20	24.75	14.11	2.46	22.87	13.52	2.74	20.25	12.62	3.01

See notes on page 17

DETAILED COOLING CAPACITIES# CONTINUED

EVAPORATOR AIR		CONDENSER ENTERING AIR TEMPERATURES °F (°C)																	
		75 (23.9)			85 (29.4)			95 (35)			105 (40.6)			115 (46.1)			125 (51.7)		
CFM	EWB °F (°C)	Capacity MBtuh		Total System KW**	Capacity MBtuh		Total System KW**	Capacity MBtuh		Total System KW**	Capacity MBtuh		Total System KW**	Capacity MBtuh		Total System KW**	Capacity MBtuh		Total System KW**
		Total	Sens‡		Total	Sens‡		Total	Sens‡		Total	Sens‡		Total	Sens‡		Total	Sens‡	
25HCD330(A,W)**30 Outdoor Section With FB4CNF030 Indoor Section																			
875	57 (13.9)	27.18	27.18	2.02	26.03	26.03	2.24	24.78	24.78	2.50	23.39	23.39	2.79	21.45	21.45	3.07	19.49	19.49	3.42
	62 (16.7)	28.44	24.01	2.03	26.96	23.33	2.25	25.36	22.59	2.51	23.65	21.76	2.79	21.48	21.48	3.07	19.54	19.54	3.42
	63 (17.2)††	29.05	19.61	2.04	27.50	18.95	2.26	25.87	18.25	2.52	24.07	17.50	2.80	21.55	16.47	3.07	18.91	15.40	3.40
	67 (19.4)	31.49	20.43	2.07	29.83	19.77	2.30	28.06	19.07	2.55	26.17	18.34	2.85	24.14	17.56	3.17	21.41	16.53	3.49
	72 (22.2)	34.60	16.62	2.11	33.02	16.06	2.34	31.22	15.43	2.60	29.22	14.74	2.91	26.97	13.94	3.25	24.63	13.15	3.63
1000	57 (13.9)	28.38	28.38	2.07	27.13	27.13	2.29	25.81	25.81	2.55	24.36	24.36	2.85	22.72	22.72	3.17	20.47	20.47	3.49
	62 (16.7)	29.14	25.72	2.08	27.59	24.98	2.30	25.98	24.14	2.55	24.40	24.40	2.85	22.76	22.76	3.17	20.51	20.51	3.49
	63 (17.2)††	29.71	20.82	2.08	28.09	20.14	2.30	26.36	19.42	2.56	24.52	18.67	2.85	22.11	17.68	3.13	19.33	16.54	3.45
	67 (19.4)	32.16	21.66	2.11	30.48	21.06	2.34	28.60	20.33	2.60	26.61	19.58	2.89	24.55	18.80	3.22	21.98	17.83	3.56
	72 (22.2)	35.21	17.30	2.15	33.61	16.78	2.38	31.78	16.17	2.65	29.75	15.50	2.95	27.51	14.76	3.29	25.00	13.90	3.68
1125	57 (13.9)	29.38	29.38	2.12	28.07	28.07	2.34	26.66	26.66	2.60	25.15	25.15	2.90	23.48	23.48	3.23	21.30	21.30	3.56
	62 (16.7)	29.75	27.27	2.12	28.15	28.15	2.34	26.70	26.70	2.60	25.18	25.18	2.90	23.51	23.51	3.23	21.34	21.34	3.56
	63 (17.2)††	30.21	21.97	2.12	28.53	21.28	2.35	26.75	20.55	2.60	24.84	19.77	2.89	22.76	18.90	3.20	19.71	17.60	3.50
	67 (19.4)	32.67	22.83	2.15	30.96	22.26	2.38	29.01	21.55	2.64	26.97	20.78	2.94	24.86	19.98	3.27	22.48	19.05	3.63
	72 (22.2)	35.66	17.95	2.19	34.05	17.45	2.42	32.19	16.87	2.69	30.14	16.21	2.99	27.89	15.49	3.33	25.30	14.64	3.72

EVAPORATOR AIR		CONDENSER ENTERING AIR TEMPERATURES °F (°C)																	
		75 (23.9)			85 (29.4)			95 (35)			105 (40.6)			115 (46.1)			125 (51.7)		
CFM	EWB °F (°C)	Capacity MBtuh		Total System KW**	Capacity MBtuh		Total System KW**	Capacity MBtuh		Total System KW**	Capacity MBtuh		Total System KW**	Capacity MBtuh		Total System KW**	Capacity MBtuh		Total System KW**
		Total	Sens‡		Total	Sens‡		Total	Sens‡		Total	Sens‡		Total	Sens‡		Total	Sens‡	
25HCD336(A,W)**31 Outdoor Section With FB4CNF036 Indoor Section																			
1050	57 (13.9)	31.95	31.95	2.39	30.67	30.67	2.65	29.29	29.29	2.94	27.80	27.80	3.26	25.76	25.76	3.59	23.48	23.48	3.99
	62 (16.7)	33.18	28.52	2.41	31.56	27.77	2.66	29.84	26.94	2.95	28.01	26.01	3.27	25.81	25.81	3.60	23.53	23.53	3.99
	63 (17.2)††	33.87	23.22	2.42	32.19	22.50	2.67	30.39	21.74	2.95	28.45	20.94	3.28	25.81	19.85	3.59	22.68	18.58	3.97
	67 (19.4)	36.68	24.14	2.44	34.92	23.49	2.71	32.98	22.73	3.00	30.94	21.95	3.32	28.72	21.10	3.70	25.84	20.01	4.06
	72 (22.2)	40.08	19.42	2.48	38.56	18.94	2.75	36.71	18.31	3.04	34.58	17.59	3.38	32.09	16.72	3.77	29.53	15.84	4.21
1200	57 (13.9)	33.27	33.27	2.45	31.91	31.91	2.71	30.46	30.46	3.00	28.89	28.89	3.33	27.12	27.12	3.70	24.64	24.64	4.06
	62 (16.7)	33.98	30.51	2.46	32.31	29.67	2.72	30.54	30.54	3.00	28.93	28.93	3.33	27.16	27.16	3.70	24.68	24.68	4.07
	63 (17.2)††	34.60	24.67	2.47	32.85	23.94	2.72	30.97	23.16	3.01	28.97	22.34	3.33	26.70	21.41	3.69	23.25	19.97	4.02
	67 (19.4)	37.41	25.60	2.49	35.66	25.04	2.76	33.60	24.27	3.05	31.47	23.46	3.38	29.19	22.59	3.75	26.62	21.61	4.16
	72 (22.2)	40.70	20.22	2.53	39.19	19.78	2.79	37.34	19.19	3.09	35.20	18.50	3.43	32.76	17.71	3.82	29.95	16.76	4.27
1350	57 (13.9)	34.39	34.39	2.51	32.97	32.97	2.77	31.42	31.42	3.06	29.79	29.79	3.39	27.97	27.97	3.77	25.68	25.68	4.15
	62 (16.7)	34.71	32.24	2.51	33.03	33.03	2.77	31.46	31.46	3.06	29.82	29.82	3.39	28.01	28.01	3.77	25.72	25.72	4.16
	63 (17.2)††	35.21	26.05	2.52	33.35	25.30	2.77	31.40	24.50	3.06	29.36	23.65	3.38	27.07	22.70	3.74	23.69	21.22	4.08
	67 (19.4)	37.95	26.97	2.54	36.17	26.43	2.81	34.08	25.72	3.10	31.88	24.88	3.43	29.55	23.99	3.81	26.96	22.97	4.22
	72 (22.2)	41.12	20.88	2.57	39.64	20.53	2.84	37.79	20.00	3.14	35.64	19.34	3.48	33.18	18.58	3.87	30.35	17.66	4.31

See notes on page 17

DETAILED COOLING CAPACITIES# CONTINUED

EVAPORATOR AIR		CONDENSER ENTERING AIR TEMPERATURES °F (°C)																	
		75 (23.9)			85 (29.4)			95 (35)			105 (40.6)			115 (46.1)			125 (51.7)		
CFM	EWB °F (°C)	Capacity MBtuh		Total System KW**	Capacity MBtuh		Total System KW**	Capacity MBtuh		Total System KW**	Capacity MBtuh		Total System KW**	Capacity MBtuh		Total System KW**	Capacity MBtuh		Total System KW**
		Total	Sens‡		Total	Sens‡		Total	Sens‡		Total	Sens‡		Total	Sens‡		Total	Sens‡	
25HCD342(A,W)**31 Outdoor Section With FB4CNF042 Indoor Section																			
1225	57 (13.9)	39.37	39.37	3.01	37.75	37.75	3.34	36.03	36.03	3.69	34.20	34.20	4.07	31.58	31.58	4.44	28.93	28.93	4.89
	62 (16.7)	41.08	37.19	3.01	38.99	36.16	3.34	36.82	35.06	3.70	34.58	33.87	4.08	31.64	31.64	4.44	28.98	28.98	4.89
	63 (17.2)††	41.94	30.35	3.01	39.77	29.36	3.34	37.53	28.35	3.70	35.15	27.30	4.09	31.79	25.83	4.45	28.16	24.25	4.86
	67 (19.4)	45.43	31.55	2.98	43.16	30.64	3.34	40.70	29.62	3.72	38.18	28.58	4.12	35.48	27.48	4.56	31.93	26.05	4.98
	72 (22.2)	49.74	25.53	2.94	47.65	24.77	3.32	45.25	23.90	3.72	42.59	22.96	4.15	39.57	21.82	4.63	36.47	20.70	5.14
1400	57 (13.9)	41.05	41.05	3.05	39.30	39.30	3.39	37.49	37.49	3.75	35.56	35.56	4.14	33.40	33.40	4.57	30.34	30.34	4.98
	62 (16.7)	42.10	39.81	3.05	39.92	38.67	3.39	37.73	37.39	3.75	35.61	35.61	4.14	33.44	33.44	4.57	30.39	30.39	4.98
	63 (17.2)††	42.91	32.24	3.04	40.63	31.23	3.39	38.26	30.19	3.75	35.81	29.11	4.14	32.72	27.77	4.53	28.86	26.06	4.93
	67 (19.4)	46.38	33.45	3.02	44.09	32.65	3.38	41.50	31.60	3.77	38.83	30.53	4.18	36.08	29.42	4.62	32.97	28.16	5.09
	72 (22.2)	50.61	26.60	2.98	48.50	25.87	3.36	46.07	25.05	3.76	43.36	24.14	4.20	40.38	23.11	4.68	37.02	21.88	5.20
1575	57 (13.9)	42.49	42.49	3.09	40.64	40.64	3.44	38.70	38.70	3.80	36.67	36.67	4.20	34.47	34.47	4.64	31.57	31.57	5.07
	62 (16.7)	43.00	42.10	3.09	40.76	40.76	3.44	38.75	38.75	3.80	36.71	36.71	4.20	34.51	34.51	4.64	31.63	31.63	5.07
	63 (17.2)††	43.68	34.03	3.08	41.28	33.00	3.44	38.83	31.93	3.80	36.30	30.82	4.20	33.52	29.59	4.62	29.39	27.70	5.00
	67 (19.4)	47.08	35.20	3.05	44.76	34.43	3.42	42.12	33.50	3.82	39.37	32.39	4.23	36.51	31.23	4.68	33.42	29.94	5.16
	72 (22.2)	51.25	27.56	3.02	49.14	26.89	3.39	46.67	26.10	3.81	43.93	25.24	4.25	40.90	24.23	4.73	37.53	23.06	5.25

EVAPORATOR AIR		CONDENSER ENTERING AIR TEMPERATURES °F (°C)																	
		75 (23.9)			85 (29.4)			95 (35)			105 (40.6)			115 (46.1)			125 (51.7)		
CFM	EWB °F (°C)	Capacity MBtuh		Total System KW**	Capacity MBtuh		Total System KW**	Capacity MBtuh		Total System KW**	Capacity MBtuh		Total System KW**	Capacity MBtuh		Total System KW**	Capacity MBtuh		Total System KW**
		Total	Sens‡		Total	Sens‡		Total	Sens‡		Total	Sens‡		Total	Sens‡		Total	Sens‡	
25HCD348(A,W)**31 Outdoor Section With FB4CNF048 Indoor Section																			
1400	57 (13.9)	44.84	44.84	3.32	42.92	42.92	3.70	40.93	40.93	4.11	38.86	38.86	4.55	36.60	36.60	5.05	33.56	33.56	5.57
	62 (16.7)	46.76	41.67	3.34	44.30	40.49	3.72	41.77	39.25	4.12	39.24	37.92	4.56	36.66	36.66	5.06	33.63	33.63	5.57
	63 (17.2)††	47.74	33.97	3.34	45.20	32.83	3.73	42.56	31.66	4.13	39.87	30.49	4.57	36.99	29.25	5.06	32.84	27.47	5.54
	67 (19.4)	51.68	35.32	3.36	48.96	34.23	3.77	46.17	33.09	4.19	43.26	31.91	4.64	40.24	30.71	5.14	37.01	29.42	5.71
	72 (22.2)	56.56	28.54	3.38	54.12	27.70	3.82	51.31	26.67	4.26	48.25	25.56	4.72	45.02	24.40	5.24	41.51	23.12	5.82
1600	57 (13.9)	46.75	46.75	3.40	44.70	44.70	3.78	42.55	42.55	4.20	40.36	40.36	4.65	38.00	38.00	5.16	35.38	35.38	5.73
	62 (16.7)	47.86	44.58	3.40	45.34	43.30	3.79	42.77	42.42	4.20	40.41	40.41	4.65	38.05	38.05	5.16	35.43	35.43	5.73
	63 (17.2)††	48.79	36.07	3.41	46.10	34.88	3.80	43.34	33.68	4.21	40.55	32.48	4.65	37.59	31.21	5.14	33.69	29.53	5.64
	67 (19.4)	52.69	37.40	3.43	50.00	36.46	3.84	47.00	35.27	4.27	43.99	34.06	4.73	40.86	32.83	5.22	37.56	31.51	5.79
	72 (22.2)	57.44	29.66	3.45	55.02	28.92	3.89	52.17	27.93	4.33	49.07	26.85	4.80	45.76	25.71	5.31	42.25	24.50	5.89
1800	57 (13.9)	48.37	48.37	3.47	46.18	46.18	3.87	43.93	43.93	4.29	41.59	41.59	4.74	39.13	39.13	5.25	36.47	36.47	5.83
	62 (16.7)	48.85	47.20	3.47	46.29	46.29	3.87	43.99	43.99	4.29	41.64	41.64	4.74	39.18	39.18	5.25	36.52	36.52	5.83
	63 (17.2)††	49.60	38.01	3.47	46.81	36.86	3.87	43.97	35.64	4.28	41.05	34.39	4.73	38.05	33.09	5.22	34.69	31.59	5.77
	67 (19.4)	53.47	39.41	3.49	50.73	38.51	3.91	47.66	37.39	4.34	44.54	36.15	4.80	41.34	34.87	5.30	37.99	33.50	5.87
	72 (22.2)	58.09	30.71	3.52	55.69	30.04	3.95	52.82	29.12	4.40	49.68	28.08	4.87	46.32	26.95	5.38	42.74	25.74	5.96

See notes on page 17

DETAILED COOLING CAPACITIES# CONTINUED

EVAPORATOR AIR		CONDENSER ENTERING AIR TEMPERATURES °F (°C)																	
		75 (23.9)			85 (29.4)			95 (35)			105 (40.6)			115 (46.1)			125 (51.7)		
CFM	EWB °F (°C)	Capacity MBtuh		Total System KW**	Capacity MBtuh		Total System KW**	Capacity MBtuh		Total System KW**	Capacity MBtuh		Total System KW**	Capacity MBtuh		Total System KW**	Capacity MBtuh		Total System KW**
		Total	Sens‡		Total	Sens‡		Total	Sens‡		Total	Sens‡		Total	Sens‡		Total	Sens‡	
25HCD360(A,W)**30 Outdoor Section With FY5BNB060 Indoor Section																			
1750	57 (13.9)	57.16	57.16	4.38	54.99	54.99	4.83	52.69	52.69	5.33	50.18	50.18	5.91	47.44	47.44	6.57	44.45	44.45	7.32
	62 (16.7)	59.15	52.45	4.41	56.47	51.18	4.85	53.63	49.82	5.35	50.65	48.37	5.92	47.54	47.30	6.57	44.51	44.51	7.32
	63 (17.2)††	60.11	42.61	4.42	57.31	41.34	4.86	54.35	40.02	5.36	51.18	38.61	5.92	47.79	37.14	6.57	44.16	35.59	7.32
	67 (19.4)	64.72	44.22	4.47	61.70	42.95	4.92	58.50	41.62	5.42	55.07	40.20	5.98	51.41	38.74	6.63	47.49	37.18	7.36
	72 (22.2)	71.01	35.89	4.55	67.67	34.62	5.00	64.16	33.30	5.50	60.39	31.90	6.07	56.34	30.42	6.71	52.00	28.86	7.44
2000	57 (13.9)	59.49	59.49	4.50	57.16	57.16	4.95	54.68	54.68	5.45	52.00	52.00	6.03	49.06	49.06	6.69	45.86	45.86	7.43
	62 (16.7)	60.51	56.18	4.51	57.75	54.84	4.96	54.89	53.32	5.46	52.07	52.07	6.03	49.12	49.12	6.69	45.91	45.91	7.43
	63 (17.2)††	61.25	45.11	4.52	58.34	43.82	4.96	55.23	42.47	5.46	51.97	41.05	6.02	48.46	39.57	6.68	44.70	37.96	7.41
	67 (19.4)	65.90	46.91	4.58	62.75	45.62	5.02	59.40	44.26	5.52	55.83	42.82	6.08	52.07	41.35	6.73	48.02	39.75	7.46
	72 (22.2)	72.25	37.51	4.66	68.77	36.22	5.11	65.08	34.87	5.61	61.18	33.45	6.17	56.96	31.94	6.81	52.49	30.36	7.54
2250	57 (13.9)	61.41	61.41	4.61	58.94	58.94	5.06	56.30	56.30	5.57	53.46	53.46	6.14	50.35	50.35	6.80	46.98	46.98	7.54
	62 (16.7)	61.74	59.59	4.62	58.94	58.94	5.06	56.37	56.37	5.57	53.52	53.52	6.14	50.39	50.39	6.80	47.03	47.03	7.54
	63 (17.2)††	62.12	47.48	4.62	59.10	46.18	5.06	55.93	44.82	5.56	52.55	43.38	6.12	48.95	41.84	6.77	45.12	40.18	7.51
	67 (19.4)	66.78	49.46	4.68	63.51	48.15	5.12	60.08	46.79	5.62	56.44	45.35	6.19	52.54	43.80	6.83	48.41	42.16	7.56
	72 (22.2)	73.16	39.03	4.76	69.54	37.71	5.21	65.76	36.35	5.71	61.72	34.91	6.27	57.39	33.38	6.91	52.81	31.78	7.63

* Tested combination.

† Total and sensible capacities are net capacities. Blower motor heat has been subtracted.

‡ Sensible capacities shown are based on 80°F (27°C) entering air at the indoor coil. For sensible capacities at other than 80°F (27°C), deduct 835 Btuh (245 kW) per 1000 CFM (480 L/S) of indoor coil air for each degree below 80°F (27°C), or add 835 Btuh (245 kW) per 1000 CFM (480 L/S) of indoor coil air per degree above 80°F (27°C).

Detailed cooling capacities are based on indoor and outdoor unit at the same elevation per AHRI standard 210/240−2008. If additional tubing length and/or indoor unit is located above outdoor unit, a slight variation in capacity may occur.

** System kw is total of indoor and outdoor unit kilowatts.

†† At TVA rating indoor condition (75°F edb/63°F ewb). All other indoor air temperatures are at 80°F edb.

NOTE: When the required data falls between the published data, interpolation may be performed. Extrapolation is not an acceptable practice.

EWB — Entering Wet Bulb

HEAT PUMP HEATING PERFORMANCE

INDOOR AIR		OUTDOOR COIL ENTERING AIR TEMPERATURES ° F (° C)																							
		–3 (–19.4)			7 (–13.9)			17 (–8.3)			27 (–2.8)			37 (2.8)			47 (8.3)			57 (13.9)			67 (19.4)		
EDB ° F (° C)	CFM	Capacity MBtuh Total	Capacity MBtuh In-teg*	Total Syst. KW†	Capacity MBtuh Total	Capacity MBtuh In-teg*	Total Syst. KW†	Capacity MBtuh Total	Capacity MBtuh In-teg*	Total Syst. KW†	Capacity MBtuh Total	Capacity MBtuh In-teg*	Total Syst. KW†	Capacity MBtuh Total	Capacity MBtuh In-teg*	Total Syst. KW†	Capacity MBtuh Total	Capacity MBtuh In-teg*	Total Syst. KW†	Capacity MBtuh Total	Capacity MBtuh In-teg*	Total Syst. KW†	Capacity MBtuh Total	Capacity MBtuh In-teg*	Total Syst. KW†
25HCD318(A,W)**30 Outdoor Section With FB4CNF018 Indoor Section																									
65 (18.3)	525	5.18	4.76	1.09	7.28	6.69	1.13	9.55	8.71	1.18	12.03	10.68	1.23	14.44	13.14	1.28	16.94	16.94	1.33	19.01	19.01	1.38	20.73	20.73	1.42
	600	5.26	4.84	1.09	7.38	6.78	1.13	9.73	8.87	1.17	12.17	10.81	1.21	14.62	13.31	1.26	16.98	16.98	1.30	18.87	18.87	1.34	20.34	20.34	1.36
	675	5.33	4.91	1.10	7.47	6.87	1.13	10.00	9.11	1.17	12.28	10.91	1.20	14.77	13.44	1.25	16.95	16.95	1.27	18.64	18.64	1.30	19.82	19.82	1.32
70 (21.1)	525	4.93	4.53	1.14	7.02	6.45	1.19	9.26	8.44	1.24	11.80	10.48	1.29	14.18	12.91	1.35	16.72	16.72	1.40	18.81	18.81	1.45	20.55	20.55	1.50
	600	5.01	4.61	1.14	7.13	6.55	1.19	9.40	8.57	1.23	11.95	10.61	1.28	14.36	13.07	1.32	16.80	16.80	1.37	18.74	18.74	1.41	20.27	20.27	1.44
	675	5.08	4.67	1.15	7.22	6.63	1.19	9.52	8.68	1.23	12.06	10.71	1.27	14.51	13.21	1.31	16.81	16.81	1.34	18.58	18.58	1.37	19.88	19.88	1.40
75 (23.9)	525	4.64	4.27	1.19	6.74	6.20	1.24	8.97	8.18	1.29	11.57	10.27	1.36	13.92	12.67	1.41	16.49	16.49	1.48	18.58	18.58	1.53	20.34	20.34	1.57
	600	4.73	4.35	1.19	6.85	6.30	1.24	9.11	8.30	1.29	11.72	10.40	1.34	14.10	12.83	1.39	16.59	16.59	1.44	18.57	18.57	1.48	20.12	20.12	1.51
	675	4.80	4.42	1.20	6.94	6.38	1.24	9.22	8.41	1.28	11.83	10.51	1.33	14.25	12.96	1.37	16.64	16.64	1.41	18.48	18.48	1.45	19.85	19.85	1.47

INDOOR AIR		OUTDOOR COIL ENTERING AIR TEMPERATURES ° F (° C)																							
		–3 (19.4)			7 (–13.9)			17 (–8.3)			27 (–2.i8)			37 (2.8)			47 (8.3)			57 (13.9)			67 (19.4)		
EDB ° F (° C)	CFM	Capacity MBtuh Total	Capacity MBtuh Integ	Total Sys-tem KW	Capacity MBtuh Total	Capacity MBtuh Integ	Total Sys-tem KW	Capacity MBtuh Total	Capacity MBtuh Integ	Total Sys-tem KW	Capacity MBtuh Total	Capacity MBtuh Integ	Total Sys-tem KW	Capacity MBtuh Total	Capacity MBtuh Integ	Total Sys-tem KW	Capacity MBtuh Total	Capacity MBtuh Integ	Total Sys-tem KW	Capacity MBtuh Total	Capacity MBtuh Integ	Total Sys-tem KW	Capacity MBtuh Total	Capacity MBtuh Integ	Total Sys-tem KW
25HCD324(A,W)**30 Outdoor Section With FB4CNF024 Indoor Section																									
65 (18.3)	700	7.98	7.35	1.45	10.55	9.70	1.54	13.20	12.03	1.60	16.25	14.43	1.67	19.15	17.43	1.73	22.05	22.05	1.80	25.36	25.36	1.89	28.21	28.21	1.97
	800	8.15	7.50	1.46	10.74	9.87	1.54	13.42	12.23	1.60	16.65	14.78	1.65	19.39	17.64	1.70	22.34	22.34	1.76	25.60	25.60	1.83	28.25	28.25	1.91
	900	8.29	7.63	1.47	10.91	10.02	1.55	13.60	12.40	1.60	16.82	14.94	1.65	19.58	17.82	1.69	22.59	22.59	1.74	25.74	25.74	1.80	28.20	28.20	1.86
70 (21.1)	700	7.54	6.94	1.51	10.14	9.31	1.61	12.78	11.66	1.67	15.64	13.89	1.74	18.85	17.15	1.82	21.72	21.72	1.89	24.99	24.99	1.98	27.87	27.87	2.07
	800	7.71	7.09	1.52	10.32	9.49	1.61	13.00	11.85	1.67	15.96	14.18	1.73	19.08	17.36	1.79	22.00	22.00	1.85	25.27	25.27	1.93	27.95	27.95	2.00
	900	7.85	7.22	1.53	10.49	9.64	1.62	13.19	12.03	1.67	16.26	14.44	1.72	19.29	17.55	1.78	22.24	22.24	1.83	25.44	25.44	1.89	27.94	27.94	1.96
75 (23.9)	700	7.08	6.51	1.58	9.68	8.89	1.68	12.36	11.27	1.75	15.19	13.49	1.82	18.59	16.91	1.91	21.39	21.39	1.98	24.61	24.61	2.08	27.51	27.51	2.17
	800	7.24	6.66	1.59	9.86	9.06	1.68	12.57	11.46	1.75	15.45	13.73	1.81	18.81	17.11	1.88	21.66	21.66	1.95	24.91	24.91	2.02	27.62	27.62	2.10
	900	7.38	6.79	1.60	10.03	9.22	1.69	12.76	11.63	1.75	15.68	13.92	1.80	18.99	17.28	1.87	21.90	21.90	1.92	25.11	25.11	1.99	27.65	27.65	2.06

See notes on page 21

HEAT PUMP HEATING PERFORMANCE CONTINUED

INDOOR AIR		OUTDOOR COIL ENTERING AIR TEMPERATURES °F (°C)																							
		−3 (−19.4)			7 (−13.9)			17 (−8.3)			27 (−2.8)			37 (2.8)			47 (8.3)			57 (13.9)			67 (19.4)		
EDB °F (°C)	CFM	Capacity MBtuh		Total Syst. KW†	Capacity MBtuh		Total Syst. KW†	Capacity MBtuh		Total Syst. KW†	Capacity MBtuh		Total Syst. KW†	Capacity MBtuh		Total Syst. KW†	Capacity MBtuh		Total Syst. KW†	Capacity MBtuh		Total Syst. KW†	Capacity MBtuh		Total Syst. KW†
		Total	Integ*		Total	Integ*		Total	Integ*		Total	Integ*		Total	Integ*		Total	Integ*		Total	Integ*		Total	Integ*	
25HCD330(A,W)30 Outdoor Section With FB4CNF030 Indoor Section**																									
65 (18.3)	875	11.54	10.62	2.01	14.61	13.43	2.07	17.89	16.31	2.13	21.51	19.10	2.20	24.95	22.71	2.26	28.66	28.66	2.33	32.91	32.91	2.40	36.28	36.28	2.45
	1000	11.73	10.79	2.02	14.83	13.63	2.07	18.18	16.58	2.12	21.76	19.32	2.18	25.26	22.99	2.23	29.04	29.04	2.29	33.14	33.14	2.34	36.10	36.10	2.37
	1125	11.90	10.95	2.04	15.02	13.81	2.08	18.71	17.06	2.13	21.96	19.50	2.17	25.52	23.22	2.21	29.36	29.36	2.27	33.18	33.18	2.30	35.81	35.81	2.32
70 (21.1)	875	11.08	10.20	2.10	14.17	13.02	2.16	17.44	15.90	2.22	21.21	18.84	2.30	24.58	22.37	2.36	28.23	28.23	2.44	32.45	32.45	2.51	35.92	35.92	2.57
	1000	11.30	10.40	2.11	14.41	13.24	2.17	17.70	16.14	2.22	21.45	19.05	2.28	24.88	22.64	2.33	28.60	28.60	2.39	32.74	32.74	2.45	35.79	35.79	2.49
	1125	11.48	10.56	2.13	14.61	13.42	2.18	17.93	16.35	2.22	21.65	19.23	2.27	25.13	22.87	2.32	28.91	28.91	2.37	32.84	32.84	2.41	35.55	35.55	2.43
75 (23.9)	875	10.66	9.81	2.20	13.74	12.63	2.26	16.99	15.49	2.32	20.87	18.54	2.41	24.20	22.03	2.48	27.80	27.80	2.55	31.99	31.99	2.63	35.52	35.52	2.69
	1000	10.85	9.98	2.21	13.97	12.83	2.26	17.25	15.73	2.32	21.12	18.76	2.39	24.49	22.29	2.44	28.16	28.16	2.50	32.32	32.32	2.56	35.45	35.45	2.60
	1125	11.02	10.14	2.22	14.16	13.01	2.27	17.47	15.93	2.32	21.33	18.95	2.38	24.75	22.52	2.43	28.47	28.47	2.48	32.48	32.48	2.52	35.27	35.27	2.55

INDOOR AIR		OUTDOOR COIL ENTERING AIR TEMPERATURES °F (°C)																							
		−3 (19.4)			7 (−13.9)			17 (−8.3)			27 (−2.i8)			37 (2.8)			47 (8.3)			57 (13.9)			67 (19.4)		
EDB °F (°C)	CFM	Capacity MB-tuh		Total Sys-tem KW	Capacity MB-tuh		Total Sys-tem KW	Capacity MB-tuh		Total Sys-tem KW	Capacity MB-tuh		Total Sys-tem KW	Capacity MB-tuh		Total Sys-tem KW	Capacity MB-tuh		Total Sys-tem KW	Capacity MB-tuh		Total Sys-tem KW	Capacity MB-tuh		Total Sys-tem KW
		Total	Integ		Total	Integ		Total	Integ		Total	Integ		Total	Integ		Total	Integ		Total	Integ		Total	Integ	
25HCD336(A,W)31 Outdoor Section With FB4CNF036 Indoor Section**																									
65 (18.3)	1050	12.79	11.77	2.17	16.58	15.24	2.26	20.53	18.72	2.35	24.72	21.96	2.46	29.59	26.93	2.60	33.44	33.44	2.71	37.48	37.48	2.84	41.96	41.96	3.04
	1200	13.08	12.04	2.19	16.92	15.55	2.28	20.91	19.07	2.36	25.18	22.36	2.46	29.99	27.29	2.58	33.84	33.84	2.68	38.05	38.05	2.80	42.68	42.68	2.97
	1350	13.35	12.28	2.22	17.22	15.83	2.30	21.25	19.37	2.37	25.56	22.70	2.46	30.31	27.58	2.58	34.23	34.23	2.66	38.53	38.53	2.77	43.26	43.26	2.93
70 (21.1)	1050	11.97	11.01	2.27	15.80	14.52	2.36	19.79	18.04	2.46	24.01	21.32	2.57	29.06	26.45	2.72	32.95	32.95	2.83	36.89	36.89	2.97	41.27	41.27	3.17
	1200	12.30	11.31	2.29	16.16	14.85	2.38	20.20	18.42	2.47	24.46	21.72	2.56	29.49	26.84	2.70	33.40	33.40	2.80	37.45	37.45	2.92	41.97	41.97	3.10
	1350	12.56	11.55	2.32	16.46	15.13	2.40	20.53	18.72	2.48	24.83	22.06	2.57	29.84	27.16	2.69	33.76	33.76	2.78	37.92	37.92	2.89	42.56	42.56	3.06
75 (23.9)	1050	11.18	10.29	2.37	15.04	13.83	2.47	19.07	17.39	2.57	23.26	20.66	2.68	27.74	25.24	2.81	32.46	32.46	2.96	36.32	36.32	3.10	40.58	40.58	3.31
	1200	11.45	10.53	2.40	15.37	14.13	2.48	19.45	17.73	2.57	23.71	21.06	2.67	28.43	25.87	2.79	32.89	32.89	2.92	36.86	36.86	3.05	41.27	41.27	3.24
	1350	11.71	10.78	2.43	15.67	14.40	2.51	19.78	18.04	2.59	24.08	21.39	2.68	29.29	26.66	2.81	33.26	33.26	2.90	37.31	37.31	3.02	41.84	41.84	3.19

See notes on page 21

HEAT PUMP HEATING PERFORMANCE CONTINUED

INDOOR AIR		OUTDOOR COIL ENTERING AIR TEMPERATURES °F (°C)																							
		−3 (−19.4)			7 (−13.9)			17 (−8.3)			27 (−2.8)			37 (2.8)			47 (8.3)			57 (13.9)			67 (19.4)		
EDB °F (°C)	CFM	Capacity MBtuh Total	Capacity MBtuh In-teg*	Total Syst. KW†	Capacity MBtuh Total	Capacity MBtuh In-teg*	Total Syst. KW†	Capacity MBtuh Total	Capacity MBtuh In-teg*	Total Syst. KW†	Capacity MBtuh Total	Capacity MBtuh In-teg*	Total Syst. KW†	Capacity MBtuh Total	Capacity MBtuh In-teg*	Total Syst. KW†	Capacity MBtuh Total	Capacity MBtuh In-teg*	Total Syst. KW†	Capacity MBtuh Total	Capacity MBtuh In-teg*	Total Syst. KW†	Capacity MBtuh Total	Capacity MBtuh In-teg*	Total Syst. KW†
25HCD342(A,W)31 Outdoor Section With FB4CNF042 Indoor Section**																									
65 (18.3)	1225	15.60	14.35	2.64	20.17	18.54	2.75	24.73	22.55	2.85	29.47	26.17	2.95	34.77	31.64	3.05	39.07	39.07	3.08	43.89	43.89	3.10	49.14	49.14	3.09
	1400	15.96	14.69	2.66	20.52	18.86	2.76	25.15	22.93	2.85	29.96	26.61	2.94	35.16	32.00	3.03	39.57	39.57	3.05	44.52	44.52	3.05	49.61	49.61	3.01
	1525	16.17	14.87	2.68	20.75	19.07	2.77	25.41	23.17	2.86	30.27	26.89	2.94	35.42	32.23	3.02	39.87	39.87	3.04	44.90	44.90	3.03	49.76	49.76	2.97
70 (21.1)	1225	14.87	13.68	2.80	19.40	17.83	2.88	23.98	21.87	2.97	28.70	25.49	3.06	34.24	31.16	3.17	38.52	38.52	3.21	43.24	43.24	3.23	48.43	48.43	3.23
	1400	15.18	13.97	2.82	19.76	18.16	2.90	24.40	22.25	2.98	29.18	25.91	3.06	34.67	31.55	3.15	39.00	39.00	3.17	43.85	43.85	3.18	48.95	48.95	3.15
	1525	15.33	14.10	2.84	20.00	18.37	2.91	24.66	22.49	2.99	29.49	26.19	3.06	34.94	31.79	3.14	39.30	39.30	3.16	44.23	44.23	3.16	49.17	49.17	3.11
75 (23.9)	1225	14.04	12.91	2.96	18.60	17.10	3.03	23.21	21.16	3.11	27.91	24.79	3.19	32.98	30.01	3.28	38.00	38.00	3.34	42.60	42.60	3.37	47.73	47.73	3.38
	1400	14.34	13.20	2.99	18.96	17.42	3.04	23.61	21.53	3.11	28.39	25.21	3.18	34.12	31.05	3.28	38.46	38.46	3.30	43.19	43.19	3.31	48.30	48.30	3.29
	1525	14.55	13.38	3.01	19.19	17.63	3.05	23.88	21.77	3.12	28.69	25.48	3.18	34.39	31.29	3.27	38.75	38.75	3.29	43.56	43.56	3.29	48.57	48.57	3.25

INDOOR AIR		OUTDOOR COIL ENTERING AIR TEMPERATURES °F (°C)																							
		−3 (19.4)			7 (−13.9)			17 (−8.3)			27 (−2.i8)			37 (2.8)			47 (8.3)			57 (13.9)			67 (19.4)		
EDB °F (°C)	CFM	Capacity MB-tuh Total	Capacity MB-tuh Integ	Total Sys-tem KW	Capacity MB-tuh Total	Capacity MB-tuh Integ	Total Sys-tem KW	Capacity MB-tuh Total	Capacity MB-tuh Integ	Total Sys-tem KW	Capacity MB-tuh Total	Capacity MB-tuh Integ	Total Sys-tem KW	Capacity MB-tuh Total	Capacity MB-tuh Integ	Total Sys-tem KW	Capacity MB-tuh Total	Capacity MB-tuh Integ	Total Sys-tem KW	Capacity MB-tuh Total	Capacity MB-tuh Integ	Total Sys-tem KW	Capacity MB-tuh Total	Capacity MB-tuh Integ	Total Sys-tem KW
25HCD348(A,W)31 Outdoor Section With FB4CNF048 Indoor Section**																									
65 (18.3)	1400	18.42	16.95	3.14	23.65	21.74	3.21	28.90	26.35	3.28	35.25	31.31	3.40	40.02	36.42	3.48	45.07	45.07	3.56	50.81	50.81	3.66	57.16	57.16	3.81
	1600	18.80	17.30	3.19	24.10	22.15	3.24	29.38	26.79	3.30	35.74	31.74	3.40	40.52	36.87	3.46	45.69	45.69	3.53	51.59	51.59	3.61	58.17	58.17	3.72
	1800	19.15	17.61	3.24	24.47	22.49	3.28	29.81	27.18	3.33	36.14	32.10	3.41	40.97	37.28	3.46	46.22	46.22	3.52	52.24	52.24	3.59	58.97	58.97	3.66
70 (21.1)	1400	17.61	16.20	3.27	22.86	21.00	3.34	28.11	25.63	3.42	33.56	29.80	3.50	39.44	35.89	3.63	44.40	44.40	3.71	50.01	50.01	3.82	56.20	56.20	3.97
	1600	17.99	16.55	3.31	23.30	21.41	3.37	28.60	26.08	3.43	34.24	30.41	3.51	39.94	36.35	3.61	45.00	45.00	3.68	50.76	50.76	3.77	57.15	57.15	3.90
	1800	18.34	16.87	3.36	23.68	21.76	3.41	29.03	26.47	3.46	35.39	31.43	3.55	40.40	36.76	3.61	45.52	45.52	3.67	51.40	51.40	3.74	58.01	58.01	3.83
75 (23.9)	1400	16.74	15.40	3.41	22.00	20.22	3.48	27.27	24.87	3.56	32.66	29.01	3.65	38.91	35.41	3.79	43.75	43.75	3.87	49.22	49.22	3.98	55.27	55.27	4.15
	1600	17.12	15.75	3.45	22.44	20.62	3.51	27.77	25.32	3.57	33.25	29.53	3.65	39.42	35.87	3.77	44.33	44.33	3.84	49.95	49.95	3.93	56.19	56.19	4.07
	1800	17.47	16.07	3.50	22.83	20.98	3.55	28.20	25.71	3.60	33.75	29.98	3.66	39.83	36.24	3.77	44.84	44.84	3.83	50.57	50.57	3.90	57.03	57.03	4.01

See notes on page 21

HEAT PUMP HEATING PERFORMANCE CONTINUED

INDOOR AIR		OUTDOOR COIL ENTERING AIR TEMPERATURES ° F (° C)																							
		−3 (−19.4)			7 (−13.9)			17 (−8.3)			27 (−2.8)			37 (2.8)			47 (8.3)			57 (13.9)			67 (19.4)		
EDB ° F (° C)	CFM	Capacity MBtuh		Total Syst. KW†	Capacity MBtuh		Total Syst. KW†	Capacity MBtuh		Total Syst. KW†	Capacity MBtuh		Total Syst. KW†	Capacity MBtuh		Total Syst. KW†	Capacity MBtuh		Total Syst. KW†	Capacity MBtuh		Total Syst. KW†	Capacity MBtuh		Total Syst. KW†
		Total	Integ*		Total	Integ*		Total	Integ*		Total	Integ*		Total	Integ*		Total	Integ*		Total	Integ*		Total	Integ*	
25HCD360(A,W)**30 Outdoor Section With FY5BNB060 Indoor Section																									
65 (18.3)	1750	24.86	22.87	3.95	31.48	28.93	4.06	38.08	34.72	4.17	45.28	40.21	4.30	52.48	47.76	4.47	58.88	58.88	4.62	66.42	66.42	4.80	73.43	73.43	4.96
	2000	25.43	23.40	4.01	32.04	29.45	4.10	38.76	35.34	4.19	46.95	41.70	4.35	53.15	48.37	4.46	59.73	59.73	4.59	67.34	67.34	4.73	73.99	73.99	4.87
	2250	25.95	23.87	4.08	32.60	29.95	4.16	39.33	35.86	4.23	47.49	42.18	4.37	53.73	48.90	4.46	60.46	60.46	4.59	67.94	67.94	4.70	74.27	74.27	4.82
70 (21.1)	1750	23.67	21.78	4.10	30.33	27.87	4.22	37.00	33.74	4.34	44.01	39.08	4.48	51.73	47.07	4.67	58.00	58.00	4.83	65.43	65.43	5.01	72.49	72.49	5.17
	2000	24.22	22.28	4.16	30.94	28.43	4.27	37.68	34.36	4.36	44.80	39.79	4.49	52.40	47.68	4.65	58.81	58.81	4.79	66.40	66.40	4.93	73.04	73.04	5.08
	2250	24.72	22.74	4.23	31.51	28.95	4.32	38.28	34.90	4.41	45.52	40.43	4.51	52.96	48.19	4.66	59.54	59.54	4.78	67.06	67.06	4.91	73.39	73.39	5.03
75 (23.9)	1750	22.37	20.58	4.27	29.13	26.77	4.39	35.90	32.74	4.52	42.85	38.05	4.66	51.00	46.41	4.89	57.17	57.17	5.05	64.41	64.41	5.23	71.54	71.54	5.39
	2000	22.91	21.08	4.33	29.73	27.32	4.44	36.57	33.34	4.55	43.63	38.75	4.67	51.62	46.97	4.86	57.93	57.93	5.00	65.46	65.46	5.15	72.12	72.12	5.29
	2250	23.41	21.54	4.40	30.29	27.84	4.50	37.15	33.87	4.59	44.29	39.34	4.70	52.19	47.49	4.86	58.63	58.63	4.99	66.17	66.17	5.11	72.48	72.48	5.24

NOTE: When the required data falls between the published data, interpolation may be performed. Extrapolation is not an acceptable practice.

* The Btuh heating capacity values shown are net integrated values from which the defrost effect has been subtracted. The Btuh heating from supplement heaters should be added to those values to obtain total system capacity.

† The kW values include the compressor, outdoor fan motor, and indoor blower motor. The kW from supplement heaters should be added to these values to obtain total system kilowatts.

EDB — Entering Dry Bulb

System Description

Outdoor-mounted, air-cooled, split-system heat pump unit suitable for ground or rooftop installation. Unit consists of a hermetic compressor, an air-cooled coil, propeller-type condenser fan, and a control box. Unit will discharge supply air upward as shown on contract drawings. Unit will be used in a refrigeration circuit to match up to a packaged fan coil or coil unit.

Quality Assurance

— Unit will be rated in accordance with the latest edition of AHRI Standard 240.

— Unit will be certified for capacity and efficiency, and listed in the latest AHRI directory.

— Unit construction will comply with latest edition of ANSI/ ASHRAE and with NEC.

— Unit will be constructed in accordance with UL standards and will carry the UL label of approval. Unit will have C-UL approval.

— Unit cabinet will be capable of withstanding Federal Test Method Standard No. 141 (Method 6061) 500-hr salt spray test.

— Air-cooled condenser coils are pressure tested and the outdoor unit is leak tested.

— Unit constructed in ISO9001 approved facility.

Delivery, Storage, and Handling

— Unit will be shipped as single package only and is stored and handled per unit manufacturer's recommendations.

Warranty (for inclusion by specifying engineer)

— U.S. and Canada only.

PRODUCTS

Equipment

— Factory assembled, single piece, air-cooled heat pump unit. Contained within the unit enclosure is all factory wiring, piping, controls, compressor, refrigerant charge Puron® (R-410A), and special features required prior to field start-up.

Unit Cabinet

— Unit cabinet will be constructed of galvanized steel, bonderized, and coated with a powder coat paint.

— Available with dense grille only.

Fans

— Condenser fan will be direct-drive propeller type, discharging air upward.

— Condenser fan motors will be totally enclosed, 1-phase type with class B insulation and permanently lubricated bearings.

— Shafts will be corrosion resistant.

— Fan blades will be statically and dynamically balanced.

— Condenser fan openings will be equipped with steel wire safety guards.

Compressor

— Compressor will be hermetically sealed.

— Compressor will be mounted on rubber vibration isolators.

Condenser Coil

— Condenser coil will be air cooled.

— Coil will be constructed of aluminum fins mechanically bonded to copper tubes which are then cleaned, dehydrated, and sealed.

Refrigeration Components

— Refrigeration circuit components will include liquid-line shutoff valve with sweat connections, vapor-line shutoff valve with sweat connections, system charge of Puron® (R-410A) refrigerant, POE compressor oil, accumulator, and reversing valve.

Operating Characteristics

— The capacity of the unit will meet or exceed _____ Btuh at a suction temperature of _____ °F/°C. The power consumption at full load will not exceed _____ kW.

— Combination of the unit and the evaporator or fan coil unit will have a total net cooling capacity of _____ Btuh or greater at conditions of _____ CFM entering air temperature at the evaporator at _____ °F wet bulb and _____ °F/°C dry bulb, and air entering the unit at _____ °F/°C.

— The system will have a SEER of _____ Btuh/watt or greater at DOE conditions.

Electrical Requirements

— Nominal unit electrical characteristics will be _____ v, single phase, 60 hz. The unit will be capable of satisfactory operation within voltage limits of _____ v to _____ v.

— Nominal unit electrical characteristics will be _____ v, three phase, 60 hz. The unit will be capable of satisfactory operation within voltage limits of _____ v to _____ v.

— Unit electrical power will be single point connection.

— Control circuit will be 24v.

Special Features

— Refer to section of this literature identifying accessories and descriptions for specific features and available enhancements.

SYSTEM DESIGN SUMMARY

1. Intended for outdoor installation with free air inlet and outlet. Outdoor fan external static pressure available is less than 0.01-in. wc.
2. Minimum outdoor operating air temperature without low-ambient operation accessory is 55°F (12.8°C).
3. Maximum outdoor operating air temperature for cooling mode is 125°F (51.7°C).
4. Minimum outdoor operating air temperature for heating mode is –30°F (–34.4°C).
5. Maximum outdoor operating air temperature for heating mode is 66°F (18.9°C).
6. For reliable operation, unit should be level in all horizontal planes.
7. For interconnecting refrigerant tube lengths greater than 80 ft (23.4 m) and/or elevation differences between indoor and outdoor units greater than 20 ft (6.1 m), consult Residential Piping and Longline Guideline and Service Manual available from equipment distributor.
8. If any refrigerant tubing is buried, provide a 6 in. (152.4 mm) vertical rise to the valve connections at the unit. Refrigerant tubing lengths up to 36 in. (914.4 mm) may be buried without further consideration. Do not bury refrigerant lines longer than 36 in. (914.4 mm).
9. Use only copper wire for electric connection at unit. Aluminum and clad aluminum are not acceptable for the type of connector provided.
10. Do not apply capillary tube indoor coils to these units.
11. Factory-supplied filter drier must be installed.

Copyright 2013 Carrier Corp. • 7310 W. Morris St. • Indianapolis, IN 46231

Edition Date: 03/13

Catalog No: 25HCD3–1PD

Manufacturer reserves the right to change, at any time, specifications and designs without notice and without obligations.

Replaces: New