38AUD
Air Cooled Condensing Units
50 Hz
With Puron® (R−410A) Refrigerant
Sizes 16−25

Carrier
turn to the experts

Installation, Start−Up and Service Instructions

CONTENTS

SAFETY CONSIDERATIONS 2
INSTALLATION GUIDELINES 2
INSTALLATION 7-17
Step 1 - Plan for Unit Location 8
Step 2 - Complete Pre-Installation Checks 8
Step 3 – Prepare Unit Mounting Support 8
Step 4 – Rig and Mount the Unit 8
Step 5 – Complete Refrigerant Piping Connections . . . 9
Step 6 – Install Accessories 13
Step 7 – Complete Electrical Connections 13
PRE-START-UP 17
System Check 17
Turn On Crankcase Heater 17
Preliminary Charge 17
START-UP 17-22
38AUD Units 17
OPERATING SEQUENCE 23
Indoor (Supply) Fan 23
Cooling, Unit Without Economizer 23
Cooling, Unit With Economizer 23
Heating 23
ROUTINE SYSTEM MAINTENANCE 24
Quarterly Inspection (and 30 days after initial start) 24
Seasonal Maintenance 24
SERVICE 24-33
Refrigeration System 24
Compressor Oil 24
Servicing Systems on Roofs with Synthetic Materials 24
Liquid Line Filter Drier 25
Filed Refrigerant Access Ports 25
Factory High-Flow Access Ports 25
Comfort Alert Diagnostic Module 25
Crankcase Heater 28
Compressor Protection 28
Low-Pressure Switches 28
High-Pressure Switches 28
Outdoor Fans 28
Lubrication 28
NOVATION™ Coil Cleaning and Maintenance 32
Repairing NOVATION Condenser Tube Leaks 32
Replacing NOVATION Condenser Coil 32
Routine Cleaning of Round-Tube Plate Fin (RTPF) Coils 32
Fastener Torque Values 33
TROUBLESHOOTING 34-35
APPENDIX A
Air Conditioner & Heat Pump with Puron® — Quick Reference Guide 36
APPENDIX B
Wiring Diagram List 36
APPENDIX C
Motormaster Sensor Locations 37
START-UP CHECKLIST 39-40

SAFETY CONSIDERATIONS

Improper installation, adjustment, alteration, service, maintenance, or use can cause explosion, fire, electrical shock or other conditions which may cause personal injury or property damage. Consult a qualified installer, service agency, or your distributor or branch for information or assistance. The qualified installer or agency must use factory-authorized kits or accessories when modifying this product. Refer to the individual instructions package

Follow all safety codes. Wear safety glasses and work gloves. Use quenching cloths for brazing operations and have a fire extinguisher available. Read these instructions thoroughly and follow all warnings or cautions attached to the unit. Consult local building codes for special requirements. In absence of local codes, it is recommended that the USA standard ANSI/NFPA 70, National Electrical Code (NEC), be followed.

It is important to recognize safety information. This is the safety-alert symbol . When you see this symbol on the unit and in instructions or manuals, be alert to the potential for personal injury.

Understand the signal words DANGER, WARNING, CAUTION, and NOTE. These words are used with the safety-alert symbol. DANGER identifies the most serious hazards which **will** result in severe personal injury or death. WARNING signifies hazards which **could** result in personal injury or death. CAUTION is used to identify unsafe practices, which **may** result in minor personal injury or product and property damage. NOTE is used to highlight suggestions which **will** result in enhanced installation, reliability, or operation.

⚠ WARNING

ELECTRICAL SHOCK HAZARD

Failure to follow this warning could cause in personal injury or death.

Before performing service or maintenance operations on unit, always turn off main power switch to unit and install lockout tag. Unit may have more than one power switch.

⚠ WARNING

UNIT OPERATION AND SAFETY HAZARD

Failure to follow this warning could cause in personal injury,death and/or equipment damage.

Puron® (R-410A) refrigerant systems operate at higher pressures than standard R-22 systems. Do not use R-22 service equipment or components on Puron refrigerant equipment.

⚠ WARNING

PERSONAL INJURY AND ENVIRONMENTAL HAZARD

Failure to follow this warning could cause in personal injury or death.

Relieve pressure and recover all refrigerant before system repair or final unit disposal.

Wear safety glasses and gloves when handling refrigerants. Keep torches and other ignition sources away from refrigerants and oils.

⚠ CAUTION

CUT HAZARD

Failure to follow this caution may result in personal injury.

Sheet metal parts may have sharp edges or burrs. Use care and wear appropriate protective clothing, safety glasses and gloves when handling parts and servicing 38AUD units.

INSTALLATION GUIDELINE

Replacement /Retrofit – R22 to Puron®

Replacement/retrofit installations require change-out of outdoor unit, metering device, and filter driers. Change-out of indoor coil (evaporator) and interconnecting tubing is recommended.

Existing evaporator coil – If the existing evaporator coil may be re-used, check with the coil manufacturer to verify the coil construction is suitable for operation with the higher pressures of Puron® (R-410A). Also determine if the existing TXV valve is compatible with R-410A, replace if necessary. The minimum factory test pressure rating must be 1725 kPa (250 psig). Existing coil will need to be purged with Nitrogen to remove as much mineral oil as possible to eliminate cross contamination of oils.

Acid test – If the existing system is being replaced because of a compressor electrical failure, assume acid is in system. If system is being replaced for any other reason, use an approved acid test kit to determine acid level. If even low levels of acid are detected, install a 100 percent activated alumina suction-line filter drier in addition to the replacement liquid-line filter drier. Remove the suction line filter drier as soon as possible, with a maximum of 72 hr of operation. Recommendation: Install a ball valve in the liquid line at the filter drier location when installing a suction filter in the suction line.

Installation –

1. Remove the existing evaporator coil or fan coil and install the replacement coil when appropriate.
2. Drain oil from low points and traps in suction line tubing (and hot gas bypass tubing if appropriate) and evaporator if they were not replaced. Removing oil from evaporator coil may require purging of the tubing with dry nitrogen.
3. Unless indoor unit is equipped with a Puron® approved metering device, change the metering device to a thermal expansion valve (TXV) designed for Puron® (R-410A).
4. Remove the existing outdoor unit. Install the new outdoor unit according to these installation instructions.
5. Install a new field-supplied liquid-line filter drier at the indoor coil just upstream of the TXV or fix orifice metering device.
6. If a suction line filter drier is also to be installed, install suction line drier downstream of suction line service valve at condensing unit.

⚠ CAUTION

UNIT DAMAGE HAZARD

Failure to follow this caution may result in equipment damage or improper operation.

Never install suction-line filter drier in the liquid-line of a Puron® system.

7. If required, install a 100% activated alumina suction line filter drier at the outdoor unit.
8. Evacuate and charge the system according to the instructions in this installation manual.
9. Operate the system for 10 hr. Monitor the pressure drop across the suction line filter drier. If pressure drop exceeds 21kPa (3 psig), replace suction-line and liquid-line filter driers. Be sure to purge system with dry nitrogen and evacuate when replacing filter driers. Continue to monitor the pressure drop across suction-line filter drier. Repeat filter changes is necessary. Never leave suction-line filter drier in system longer than 72 hr (actual time).

38AUD

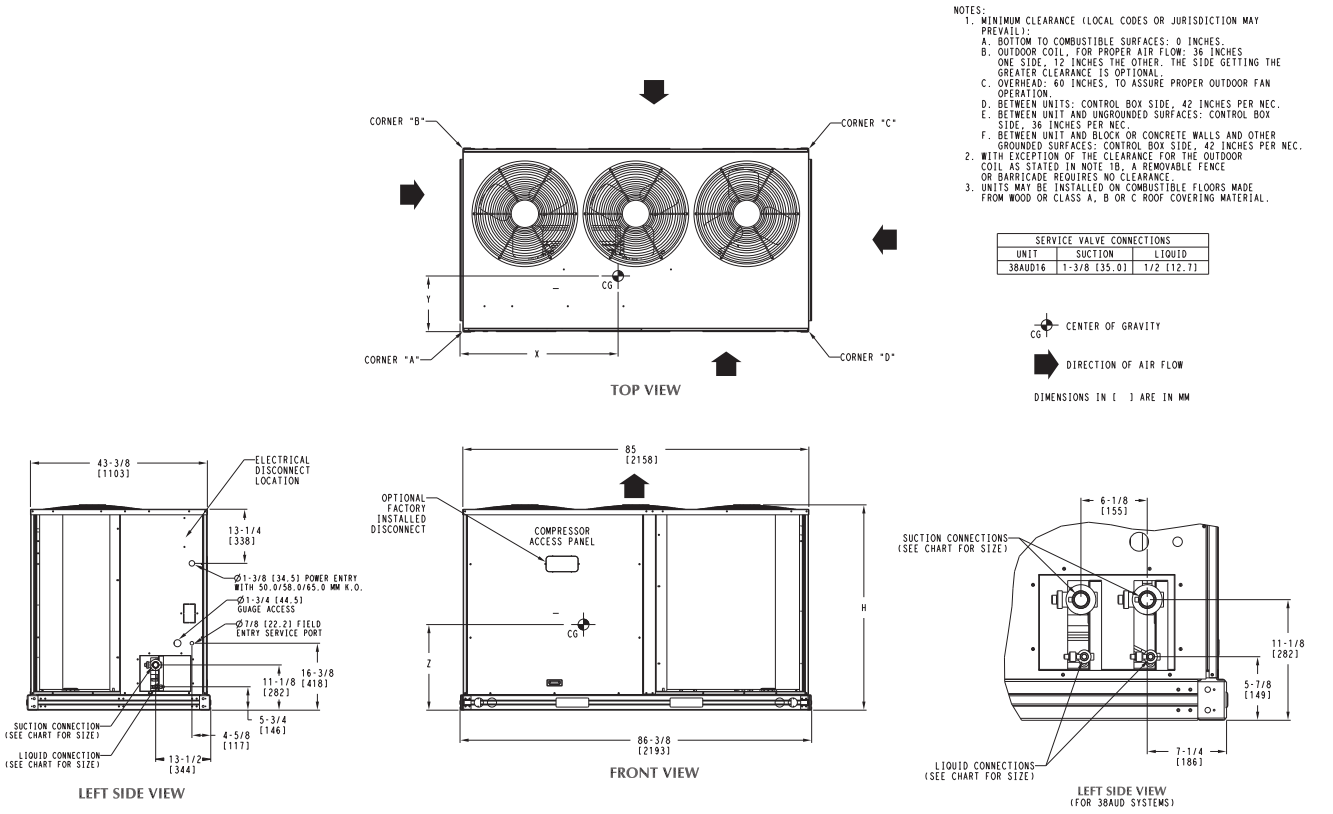

UNIT	Standard Weight		Corner A		Corner B		Corner C		Corner D		Center of Gravity			Unit Height
	kg.	lbs.	kg.	lbs.	kg.	lbs.	kg.	lbs.	kg.	lbs.	X	Y	Z	H
38AUD*16	288	633	100	210	61	134	61.5	135	65.5	144	965.2 mm 38.00 in	495.3 mm 19.50 in	383.3 mm 15.10 in	279.2 mm 50.36 in1

Fig. 1 - 38AUD*16 Unit Dimensions

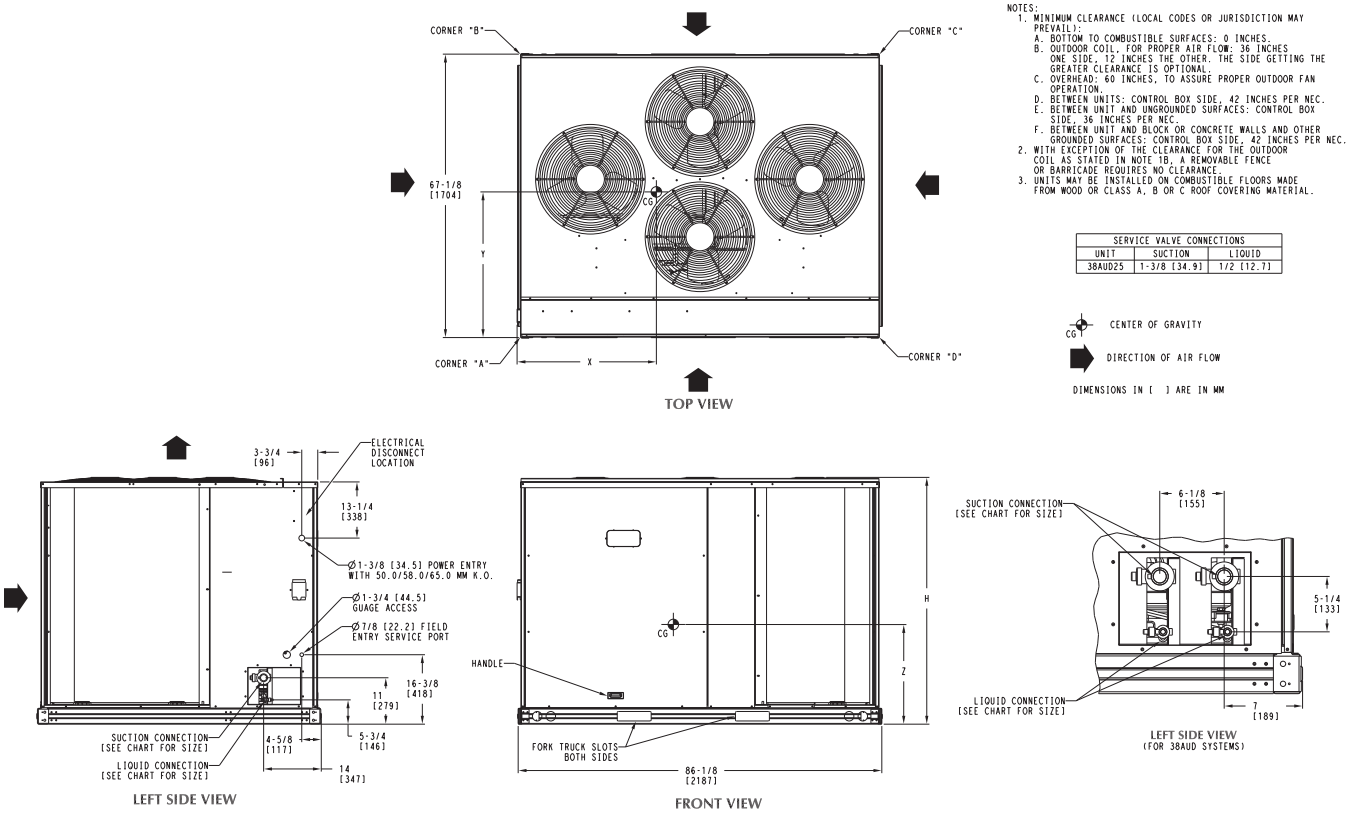

UNIT	Standard Weight		Corner A		Corner B		Corner C		Corner D		Center of Gravity			Unit Height
	kg.	lbs.	lbs.	kg.	kg.	lbs.	kg.	lbs.	kg.	lbs.	X	Y	Z	H
38AUD*25	409	900	216	475	26.5	58	110	242	57	125	946.1 mm 37.25 in	590.5 mm 23.25 in	383.3 mm 15.10 in	1279.2 mm 50.36 in

Fig. 2 - 38AUD*25 Unit Dimensions

Table 1A — Physical Data — 38AUD*16-25 Units — 50 Hz SI

UNIT SIZE 38AU	D*16	D*25
NOMINAL CAPACITY (kW)	52.7	70.3
OPERATING WEIGHT (kg)		
NOVATION™ Coil (Al Tube)	288	
Round Tube/Plate Fin Coil (Cu/Al)		409
REFRIGERANT TYPE‡	R-410A	
Operating Charge A/B, Typical (kg)†	6.4/6.4	9.5/9.5
Shipping Charge A/B (kg)	2.7/2.7	8.6/8.6
COMPRESSOR	Scroll	
Qty...Model	2...ZP83	2...ZP103
Oil Charge (L)	1.7	3.2
No. Cylinders	N/A	N/A
Speed (r/s)	58	58
CONDENSER FANS		
Qty...r/s	3...18	4...18
Motor Hp NEMA	1/4	1/4
Diameter (mm)	560	560
Nominal Airflow (L/s)	3933	5506
Watts (Total)	810	960
CONDENSER COIL (Qty)	2...NOVATION	2...RTPF
Face Area (sq m total)	4.6	4.6
Rows/Fins per Meter (Fins/m)	1...670	2...670
Storage Capacity A/B (kg)**	3.0/3.0	9.5/9.5
CONTROLS		
Pressurestat Settings (kPa)		
High Cutout	4347 ± 70	
Cut-in	3482 ±138	
Low Cutout	372 ± 21	
Cut-in	807 ± 34	
PIPING CONNECTIONS (mm ODS)		
Qty...Suction	2...34.93	2...34.93
Qty...Liquid	2...12.7	2...12.7

LEGEND
NEMA — National Electrical Manufacturers Association
ODS — Outside Diameter Sweat (socket)

‡ Unit is factory-supplied with partial charge only.
† Typical operating charge with 7.62 m of interconnecting piping.
** Storage capacity of condenser coil with coil 80% full of liquid R-410A at 35°C.

38AUD

Table 1B — Physical Data — 38AUD*16-25 Units — 50 Hz English

UNIT SIZE 38AU	D*16	D*25
NOMINAL CAPACITY (tons)	15	20
OPERATING WEIGHTS (lb)		
NOVATION™ Coil (Al Tube)	633	
Round Tube/Plate Fin Coil (Cu/Al)		900
REFRIGERANT TYPE‡	R-410A	
Operating Charge A/B, Typical (lb)†	14.0/14.0	21.0/21.0
Shipping Charge A/B (lb)	6.0/6.0	19.0/19.0
COMPRESSOR	Scroll	
Qty...Model	2...ZP83	2...ZP103
Oil Charge (oz)	60	110
No. Cylinders	N/A	N/A
Speed (rpm)	3500	3500
CONDENSER FANS		
Qty...Rpm	3...1100	4...1100
Motor Hp	1/4	1/4
Diameter	22	22
Nominal Airflow (Cfm Total)	8,300	11,700
Watts (Total)	810	960
CONDENSER COIL (Qty)	2...NOVATION	2...RTPF
Face Area (sq ft total)	50	50
Rows/Fins per inch (FPI)	1/17	2/17
Storage Capacity A/B (lb)**	6.7/6.7	21.0/21.0
CONTROLS		
Pressurestat Settings (psig)		
High Cutout	630 ± 10	
Cut-in	505 ± 20	
Low Cutout	54 ± 3	
Cut-in	117 ± 5	
PIPING CONNECTIONS (in. ODS)		
Qty...Suction	2...1 3/8	2...1 3/8
Qty...Liquid	2...1/2	2...1/2

LEGEND
ODS — Outside Diameter Sweat (socket)

‡ Unit is factory-supplied with partial charge only.
† Typical operating charge with 25 ft of interconnecting piping.
** Storage capacity of condenser coil with coil 80% full of liquid R-410A at 95°F.

38AUD

1	2	3	4	5	6	7	8	9	10	11	12	13	14	15	16	17	18
3	8	A	U	D	A	2	5	A	0	G	9	A	0	A	0	A	0

Model Type
38AU= Carrier Condensing Unit
Puron® R−410A Refrigerant

Type of Coil
D = Dual Circuit, A/C Scroll Compressor

Refrigerant Options
A = None
B = Low Ambient

Nominal Capacity
16 = 45 kW (15 Tons)
25 = 57 kW (20 Tons)

Not Used
A = Not Used

Not Used
0 = Not Used

Packaging
0 = Standard
1 = LTL

Electrical Options
A = None
C = Non-Fused Disconnect

Service Options
0 = None

Not Used
A = Place Holder

Base Unit Controls
0 = Electro-Mechanical Controls

Design Rev
A = Initial Release

Voltage
9 = 400/3/50

Coil Options

Size 16 (NOVATION™)	Size 25 (RTPF)
G = Al/Al	A = Cu/Al
K = E-Coat Al/Al	B = Precoat (Cu/Al)
T = Al/Al with Hail Guard	C = E-Coat (Cu/Al)
W= E-Coat Al/Al with Hail Guard	M = Cu/Al with Hail Guard
	N = Precoat (Cu/Al) with Hail Guard
	P = E-Coat (Cu/Al) with Hail Guard

C10067

Fig. 3 - Model Number Nomenclature

POSITION NUMBER	1	2	3	4	5	6	7	8	9	10
TYPICAL	0	5	1	0	G	1	2	3	4	5

POSITION	DESIGNATES
1−2	Week of manufacture (fiscal calendar)
3−4	Year of manufacture (”10” = 2010)
5	Manufacturing location (G = ETP, Texas, USA)
6−10	Sequential number

C10068

Fig. 4 - Serial Number Nomenclature

Matching 38AUD To Evaporator Coil –

The Model 38AUD is a dual-circuit unit design that requires two sets of refrigeration piping between the outdoor unit and the evaporator coil (or coils). This model can only be connected to an evaporator coil that has two refrigeration circuits (or to two separate evaporator coils). The Model 38AUD CANNOT be connected to a single-circuit evaporator coil. The Model 38AUD CANNOT be field-converted to a single-circuit design.

Before unpacking this new 38AUD model, compare the evaporator coil design to the 38AUD model.

INSTALLATION

Jobsite Survey

Complete the following checks before installation.

1. Consult local building codes or the U.S.A. National Electrical Code (Ref: ANSI/NFPA 70, [American National Standards Institute/National Fire Protection Association], latest revision) for special installation requirements
2. Determine unit location (from project plans) or select unit location.
3. Check for possible overhead obstructions which may interfere with unit lifting or rigging.

Step 1 — Plan for Unit Location

Select a location for the unit and its support system (pad, rails or other) that provides for the minimum clearances required for safety. This includes the clearance to combustible surfaces, unit performance and service access below, around and above unit as specified in unit drawings. See Fig. 5.

NOTE: Consider also the effect of adjacent units on airflow performance and control box safety clearance.

Do not install the outdoor unit in an area where fresh air supply to the outdoor coil may be restricted or when recirculation from the condenser fan discharge is possible. Do not locate the unit in a well or next to high walls.

Evaluate the path and required line length for interconnecting refrigeration piping, including suction riser requirements (outdoor unit above indoor unit), liquid line lift (outdoor unit below indoor unit) and hot gas bypass line. Relocate sections to minimize the length of interconnecting tubing.

DO NOT BURY REFRIGERATION LINES.

Although unit is weatherproof, avoid locations that permit water from higher level runoff and overhangs to fall onto the unit.

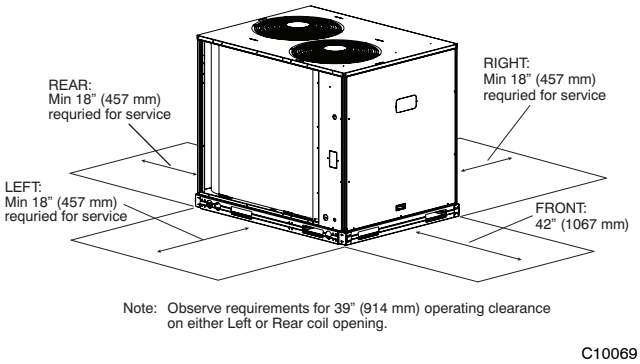

Fig. 5 - Service Clearance Dimensional Drawing

Step 2 — Complete Pre-Installation Checks

CHECK UNIT ELECTRICAL CHARACTERISTIC — Confirm before installation of unit that voltage, amperage and circuit protection requirements listed on unit data plate agree with power supply provided.

UNCRATE UNIT — Remove unit packaging except for the top skid assembly, which should be left in place until after the unit is rigged into its final location.

INSPECT SHIPMENT — File a claim with shipping company if the shipment is damaged or incomplete.

CONSIDER SYSTEM REQUIREMENTS

- Consult local building codes or the U.S.A. National Electrical Code (Ref: ANSI/NFPA 70, [American National Standards Institute/National Fire Protection Association], latest revision) for special installation requirements.
- Allow sufficient space for airflow clearance, wiring, refrigerant piping, and servicing unit. See Fig. 1 and Fig. 2 for unit dimensions and weight distribution data.
- Locate the unit so that the outdoor coil (condenser) airflow is unrestricted on all sides and above.
- The unit may be mounted on a level pad directly on the base channels or mounted on raised pads at support points. See Tables 1A and 1B for unit operating weights. See Fig. 1 and Fig. 2 for weight distribution based on recommended support points.

NOTE: If vibration isolators are required for a particular installation, use the data in Fig. 1 and Fig. 2 to make the proper selection.

Step 3 — Prepare Unit Mounting Support

Slab Mount —

Provide a level concrete slab that extends a minimum of 150 mm (6 in.) beyond unit cabinet. Install a gravel apron in front of condenser coil air inlet to prevent grass and foliage from obstructing airflow.

Step 4 — Rig and Mount the Unit

⚠ CAUTION

UNIT DAMAGE HAZARD

Failure to follow this caution may result in equipment damage.

All panels must be in place when rigging. Unit is not designed for handling by fork truck.

RIGGING — These units are designed for overhead rigging. Refer to the rigging label for preferred rigging method. Spreader bars are not required if top crating is left on the unit. All panels must be in place when rigging. As further protection for coil faces, plywood sheets may be placed against the sides of the unit, behind cables. Run cables to a central suspension point so that the angle from the horizontal is not less than 45 degrees. Raise and set the unit down carefully.

If it is necessary to roll the unit into position, mount the unit on longitudinal rails, using a minimum of 3 rollers. Apply force to the rails, not the unit. If the unit is to be skidded into position, place it on a large pad and drag it by the pad. Do not apply any force to the unit.

Raise from above to lift the unit from the rails or pad when unit is in its final position.

After the unit is in position, remove all shipping materials and top crating.

Step 5 — Complete Refrigerant Piping Connections

IMPORTANT: Do not bury refrigerant piping underground.

IMPORTANT: A refrigerant receiver is not provided with the unit. Do not install a receiver.

PROVIDE SAFETY RELIEF — If local codes dictate an additional safety relief device, purchase locally and install locally. Installation will require the recovery of the factory shipping charge before the factory tubing can be cut and the supplemental relief device is installed.

The 38AUD has two separate refrigeration systems. If required, each circuit will require a field-supplied/installed supplemental relief device.

Table 3 – Equivalent Lengths for Common Fittings (ft)

Nominal Tube OD	Elbows				
	90° Std	90° Lrad	90° Street	45° Std	45° Street
3/8	1.3	0.8	2.2	0.6	1
1/2	1.4	0.9	2.3	0.7	1.1
5/8	1.6	1	2.5	0.8	1.3
3/4	1.8	1.2	2.9	0.9	1.5
7/8	2	1.4	3.2	0.9	1.6
1 1/8	2.6	1.7	4.1	1.3	2.1
1 3/8	3.3	2.3	5.6	1.7	3
1 5/8	4	2.6	6.3	2.1	3.4
2 1/8	5	3.3	8.2	2.6	4.5

Nominal Tube OD	Tees			
	Branch Flow	Straight-Thru		
		No Reduct	Reduce 25%	Reduce 50%
3/8	2.6	0.8	1.1	1.3
1/2	2.7	0.9	1.2	1.4
5/8	3	1	1.4	1.6
3/4	3.5	1.2	1.7	1.8
7/8	4	1.4	1.9	2
1 1/8	5	1.7	2.3	2.6
1 3/8	7	2.3	3.1	3.3
1 5/8	8	2.6	3.7	4
2 1/8	10	3.3	4.7	5

CHECK 38AUD UNIT WITH EVAPORATOR COIL CONNECTIONS — Confirm before installation of unit that the evaporator coil connections are consistent with this 38AUD unit.

DETERMINE REFRIGERANT LINE SIZES — Select the recommended line sizes for the 38AUD unit. See Tables 3 and 4.

Determine the linear length of interconnecting piping required between the outdoor unit and indoor unit (evaporator). Consider and identify also the arrangement of the tubing path (quantity and type of elbows in both lines), liquid line solenoid size, filter drier and any other refrigeration specialties located in the liquid line. Refer to the indoor unit installation instructions for additional details on refrigeration specialties devices.

Determine equivalent line length adjustments for path and components and add to linear line lengths. See Table 4, Equivalent Lengths for Common Fittings, for usual fitting types. Also identify adjustments for refrigeration specialties. Refer to Part 3 of the Carrier System Design Manual for additional data and information on equivalent lengths.

NOTE: Equivalent line lengths will vary based on tube diameter. Calculate equivalent line length for each pipe by adding equivalent length adjustments to linear lengths for each pipe.

Liquid Lift – A liquid lift condition exists when the outdoor unit is located below the indoor (evaporator) unit and liquid flows vertically up in a portion of the liquid line. The vertical column of liquid reduces the available state point subcooling at the evaporator coil's thermal expansion valve. This effect reduces the length of liquid lift (meters [feet] of elevation) that a liquid line size can accommodate. Longer linear tube lengths will also reduce the amount of liquid lift possible.

Check Tables 4 for maximum liquid lift capabilities for line sizes. Reselect the liquid line tube size if necessary. If maximum available tube size cannot provide the required lift distance on this installation, relocate the outdoor unit to reduce the equivalent line length or the lift requirement.

Suction Riser – A suction riser condition exists when the outdoor unit is located above the indoor (evaporator) unit and suction vapor must flow vertically up to return to the compressor. Oil return is a concern when the suction tube size is too large to produce the minimum refrigerant velocity to ensure oil return at minimum load conditions.

Check Table 5 for maximum suction tube size for 38AUD units at minimum load conditions. Consider suction speed riser (reduced tube size for vertical segment only) or double suction riser arrangement if the recommended suction tube size does not provide necessary minimum flowrates for this riser.

Table 4 – 38AUD 15-25 Piping Recommendations (Two-Circuit Unit)

SI

NOTE: 38AUD requires TWO sets of refrigeration piping

R-410A	Equivalent Length m	0-12	12-23	23-34	34-46	46-57
Model	Linear Length m	0–7.5	7.5–15	15–23	23–30	30–38
38AUD*16	Liquid Line	3/8	3/8	3/8 1/2	3/8 1/2	1/2
	Max Lift	7.5	15	22 23	13 30	38
	Suction Line	7/8	7/8	1 1/8	1 1/8	1 1/8
	Charge (kg) A/B	5.9	6.3	7.0 8.0	7.5 8.9	9.8
38AUD*25	Liquid Line	1/2	1/2	1/2	1/2 5/8	1/2 5/8
	Max Lift	7.5	15	23	20 28	23 33
	Suction Line	7/8	1 1/8	1 1/8	1 1/8	1 3/8
	Charge (kg) A/B	9.4	10.3	11.2	12.1 13.8	13.0 15.1

English

NOTE: 38AUD requires TWO sets of refrigeration piping

R-410A	Equivalent Length					
	ft	0–12	38–75	75–113	113–150	150–188
	m	0–7.5	7.5–15	15–23	23–30	46-57
Model	Linear Length ft	0–25	25–50	50–75	75–100	100–125
38AUD*16	Liquid Line	3/8	3/8	3/8 1/2	3/8 1/2	1/2
	Max Lift	25	50	71 75	43 100	125
	Suction Line	7/8	7/8	1 1/8	1 1/8	1 1/8
	Charge (lbs) A/B	12.9	13.9	15.4 17.7	16.5 19.6	21.6
38AUD*25	Liquid Line	1/2	1/2	1/2	1/2 5/8	1/2 5/8
	Max Lift	7.5	15	23	20 28	23 33
	Suction Line	7/8	1 1/8	1 1/8	1 1/8	1 3/8
	Charge (lbs) A/B	20.7	22.8	24.7	26.6 30.4	28.6 33.3

Legend:	
Equiv Length	Equivalent tubing length, including effects of refrigeration specialties devices
Linear Length	Typical linear tubing length, (50% added to linear to define Equivalent Length for this table)
Liquid Line	Tubing size, inches OD.
Max Lift	Maximum liquid lift (indoor unit ABOVE outdoor unit only), at maximum permitted liquid line pressure drop — • Linear Length Less than 30 m (100 ft): Minimum 1.1°C (2.0°F) subcooling entering TXV • Linear Length Greater than 30 m (100 ft): Minimum 0.3°C (0.5°F) subcooling entering TXV
Suction Line	Tube size, inches OD
Charge	Charge Quantity, kg (lbs). Calculated for both liquid line sizes (where applicable), but only with larger suction line size (where applicable)
NOTE:	For applications with equivalent length greater than 57 m (188 ft) and/or linear length greater than 38 m (125 ft), contact your local Carrier representative.

Table 5 – 38AUD Maximum Suction Pipe Size

Model:	Unit Size	Maximum Tube Size
38AUD	16	1 5/8
	25	1 5/8

INSULATE SUCTION LINES — Apply closed-cell tubular insulation to all suction lines between evaporator coil connection and 38AUD unit's suction service valve.

Hot Gas Bypass — Hot gas bypass, if used, should be introduced before the evaporator. (A bypass route that also bypasses the evaporator circuit may lead to oil trapping in the evaporator circuit during low load conditions and then to oil slugging as evaporator load increases.) Model 38AUD units do not include a hot gas stub connection; a tee must be field-supplied and installed in the compressor discharge line. Run a 1/2-in OD line between outdoor unit and evaporator coil inlet. Install an Auxiliary Side Connector at the evaporator between TXV and distributor (follow instructions for the side connector part). Insulate the hot gas line.

Generally only one hot gas bypass system will be applied on a two-circuit unit. Connect the hot gas bypass system to Circuit 1 (first-on/last-off, connected to the evaporator coil's bottom circuit).

38AUD PIPING CONNECTIONS – The 38AUD's two circuits are designated Circuit 1 and Circuit 2. Circuit 1 is controlled by the thermostat's Y1 (or TC1) contact and will be the first circuit on and last circuit off. Circuit 2 is controlled by the thermostat's Y2 (or TC2) contact and this circuit is always the "lag" circuit.

See Fig. 6 for location of Circuit 1 and Circuit 2 service valves and field piping connections. Circuit 1 is on the left-hand side of the service valve compartment; Circuit 2 is on the right.

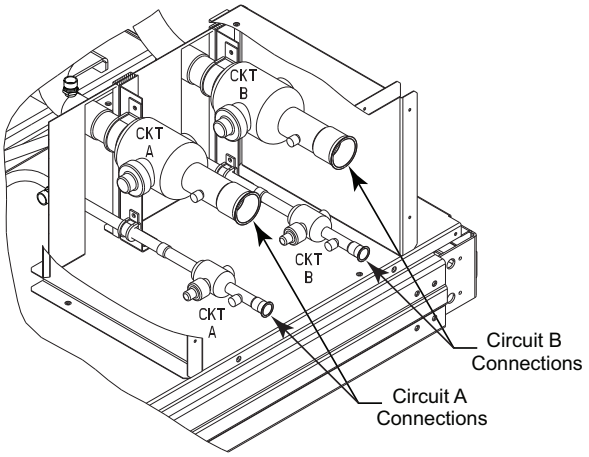

C10070

Fig. 6 - 38AUD Service Valve Locations

When a single piece evaporator coil with two separate circuits is connected to a 38AUD, the lower coil circuit should be connected to the 38AUD's Circuit 1 so that the evaporator's lower coil segment is first-on/last-off (to avoid re-evaporation of condensate on dry lower coil segments).

Plan the Circuit 1 and Circuit 2 tubing segments carefully, mark each segment and check constantly as piping systems are assembled to avoid piping errors.

38AUD unit cannot be field-piped as a single-circuit/tandem system.

Connecting 40RU to 38AUD – The 40RU fan coil in sizes 16, 25 and 28 is a face-split coil design that also has its circuits designated as 1 and 2. See Fig. 7. Note that the lower coil segment changes as the arrangement of the 40RU changes. In a vertical arrangement, the 40RU's lower coil segment is segment 2; this segment should be connected to the 38AUD's Circuit 1. In a horizontal arrangement, the 40RU's lower segment is now segment 1; this segment should be connected to the 38AUD's Circuit 1.

Note that refrigerant suction piping should be insulated.

40RU Arrangement	Cooling Stage	40RU Coil Segment	Connect to 38AUD
Vertical	Y1 Y2	2 1	Circuit 1 Circuit 2
Horizontal	Y1 Y2	1 2	Circuit 1 Circuit 2

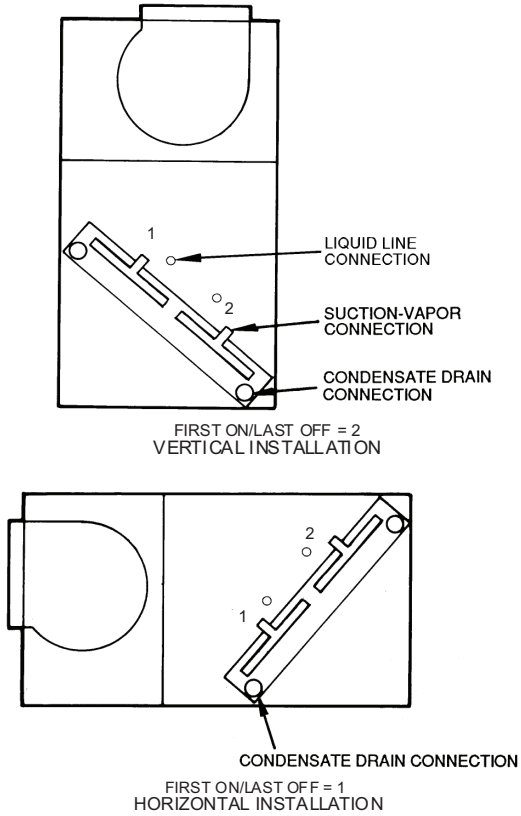

C10071

Fig. 7 - Typical Evaporator Coil Connections (40RU)

INSTALL FILTER DRIERS AND MOISTURE INDICATORS — Every unit MUST have a filter drier in the liquid line. 38AUD models require two filter driers (one in each liquid line). Locate the filter driers at the indoor unit, close to the evaporator coil's thermal expansion valve (TXV) inlets.

38AUD units include two Puron-duty filter driers, shipped in cartons attached to the unit basepan. Remove the filter driers and prepare to install in the liquid lines at the evaporator coil. Do not remove connection fitting plugs until ready to connect and braze the filter drier into the liquid line position.

Table 6 – Puron-duty Filter Driers

Model-Size	Qty	Liquid Line OD	Desiccant Volume	Part Number Ref
38AUD*16	2	$^1/_2$-in	16 cu. in.	KH43LG085
38AUD*25	2	$^1/_2$-in	16 cu. in.	KH43LG085

Installation of liquid line moisture indicating sightglass in each circuit is recommended. Locate the sightglass(es) between the outlet of the filter drier and the TXV inlet.

Refer to Table 7 for recommendations on refrigeration specialties.

Table 7 – Refrigerant Specialties Part Numbers.

LIQUID LINE SIZE (in.)	LIQUID LINE SOLENOID VALVE (LLSV)	LLSV COIL	SIGHT GLASS	FILTER DRIER
3/8	EF680033	EF680037	KM680008	KH43LG091
1/2	EF680035	EF680037	KM680004	KH43LG085
5/8	EF680036	EF680037	KM680005	KH43LG087

38AUD units require TWO sets of parts.

Select the filter driers for maximum unit capacity and minimum pressure drop. Complete the refrigerant piping from the indoor unit to the outdoor unit before opening the liquid and suction lines at the outdoor unit.

INSTALL LIQUID LINE SOLENOID VALVE —
It is recommended that a solenoid valve be placed in the main liquid line (see Fig. 8) between the condensing unit and the evaporator coil. Locate the solenoid valve at the outlet end of the liquid line, near the evaporator coil connections, with flow direction arrow pointed at the evaporator coil. Refer to Table 7. (A liquid line solenoid valve is required when the liquid line length exceeds 23 m [75 ft].) This valve prevents refrigerant migration (which causes oil dilution) to the compressor during the off cycle, at low outdoor ambient temperatures. Wire the solenoid in parallel with the compressor contactor coil (see Fig. 8). This means of electrical control is referred to as solenoid *drop* control.

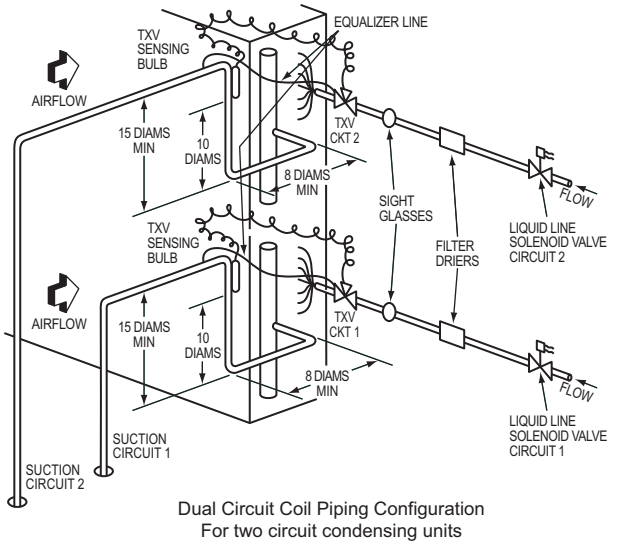

Fig. 8 - Location of Sight Glasses and Filter Driers Typical 38AUD Systems

CAPACITY CONTROL LIQUID LINE SOLENOID VALVE Evaporator capacity control via liquid solenoid valve is not recommended for use with 38AUD models.

MAKE PIPING CONNECTIONS — Piping connections at the 38AUD unit are ball valves with stub tube extensions. Do not open the unit service valves until all interconnecting tube brazing as been completed.

The stub tube connections include 1/4-in SAE service fittings with Schrader valve cores (see Fig. 9). Before making any brazed connections to the unit service valves, remove both Schrader valve caps and cores and save for re-installation. Connect a source for nitrogen to one of these service fittings during tube brazing to prevent the formation of copper oxides inside the tubes at brazed joints.

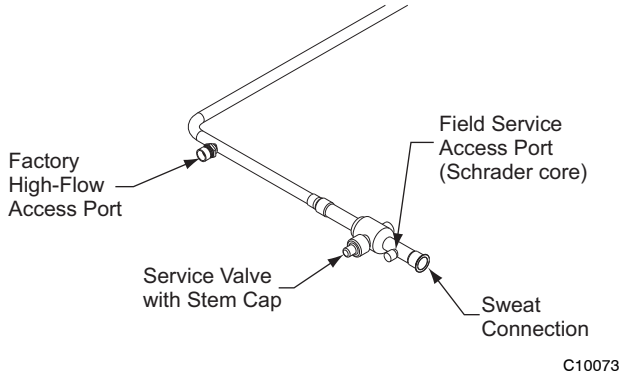

Fig. 9 - Typical Piping Connection Assembly

When connecting the field tubing to the 38AUD service valves, wrap the valves in wet rags to prevent overheating

Pressure-test all joints from outdoor unit connections over to the evaporator coil, using nitrogen as pressure and with soap-and-bubbles.

When pressure-testing is completed, remove the nitrogen source at the outdoor unit service valves and re-install the two Schrader valve cores. Torque the cores to 23-34 N-cm (2-3 in-lbs).

EVACUATION/DEHYDRATION — Evacuate and dehydrate the connected refrigeration systems (excluding the 38AUD unit) to 500 microns using a two-stage vacuum pump attached to the service ports outside the 38AUD service valves, following description in GTAC II, Module 4, System Dehydration.

⚠ WARNING

UNIT OPERATION AND SAFETY HAZARD

Failure to follow this warning could cause personal injury, death and/or equipment damage.

Puron® (R-410A) refrigerant systems operate at higher pressure than standard R-22 systems. Do not use R-22 service equipment or components on Puron refrigerant equipment.

PRELIMINARY CHARGE — Before starting the unit, charge R-410A liquid refrigerant into the high side of each 38AUD circuit through the liquid service valve(s). The amount of refrigerant added must be at least 80% of the operating charge listed in Table 4 for LINEAR line length LESS the factory charge quantity (if factory shipping charge has not been removed). See example below.

Allow high and low side pressures to equalize. If pressures do not equalize readily, charge R-410A vapor (using special service manifold with expansion device) into the suction line service port for the low side of system to assure charge in the evaporator. Refer to GTAC II, Module 5, Charging, Recover, Recycling, and Reclamation for liquid charging procedures.

Example:

38AUD*16

20 m linear line length

Equivalent line length 30 m

Liquid Lift: 10 m
(linear measure, indoor unit above outdoor unit)

Select line sizes from Table 4 (38AUD):

Liquid $^{3}/_{8}$ in

Suction 1-$^{1}/_{8}$ in.

Operating Charge

Each circuit: 7.0 kg (at 23 m linear length)

80% of Operating Charge:

Each circuit: 0.80 x 7.0 = 5.6 kg

Factory Shipping Charge: 2.7 kg

Field-charge quantity: 5.6 kg – 2.7 kg = 2.9 kg

For linear line lengths longer than 38 m (125 ft), contact your local Carrier representative for system charge value.

Step 6 — Install Accessories

Accessories requiring modifications to unit wiring should be completed now. These accessories may include Winter Start controls, Low Ambient controls. Refer to the instructions shipped with the accessory.

Step 7 — Complete Electrical Connections

⚠ WARNING

ELECTRICAL SHOCK HAZARD

Failure to follow this warning could result in personal injury or death.

Do not use gas piping as an electrical ground. Unit cabinet must have an uninterrupted, unbroken electrical ground to minimize the possibility of personal injury if an electrical fault should occur. This ground may consist of electrical wire connected to unit ground lug in control compartment, or conduit approved for electrical ground when installed in accordance with local electrical codes or in absence of local codes, it is recommended that the U.S.A. standard ANSI/NFPA 70, National Electrical Code (NEC), be followed.

NOTE: Check all factory and field electrical connections for tightness. Field-supplied wiring shall conform with the limitations of 33°C (63°F) rise.

Field Power Supply —

All units are factory wired for the voltage shown on the nameplate. Refer to unit label diagram for additional information.

Field power wires are connected to the unit to compressor contactor C1 and terminal block TB1 pressure lugs in the unit's main control box or at factory-installed option non-fused disconnect switch (see Fig. 11). Max wire size is #4 AWG (copper only).

NOTE: TEST LEADS - Unit may be equipped with short leads (pigtails) on the field line connection points on contactor C or optional disconnect switch. These leads are for factory run-test purposes only; remove and discard before connecting field power wires to unit connection points. Make field power connections directly to line connection pressure lugs only.

⚠ WARNING

FIRE HAZARD

Failure to follow this warning could cause in personal injury, death and/or equipment damage.

Do not connect aluminum wire between disconnect switch and condensing unit. Use only copper wire. (See Fig. 10.)

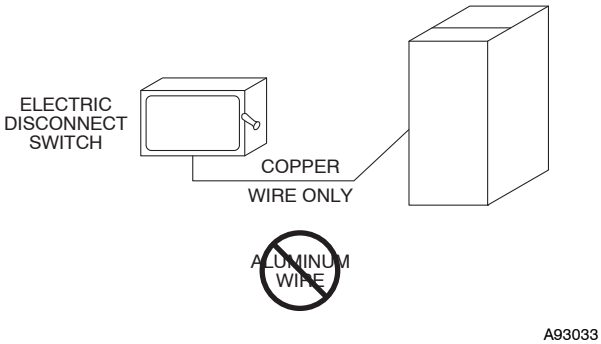

Fig. 10 - Disconnect Switch and Unit

Units Without Factory-Installed Disconnect —

When installing units, provide a disconnect switch of adequate size per local or national wiring code. Disconnect sizing data is provided on the unit informative plate. Locate on unit cabinet or within sight of the unit per national or local codes. Do not cover unit informative plate if mounting the disconnect on the unit cabinet.

Units with Factory-Installed Disconnect —

The factory-installed option disconnect switch is located in a weatherproof enclosure located under the main control box. The manual switch handle is accessible through an opening in the access panel.

All units -

All field wiring must comply with all local codes. Size wire based on MCA (Minimum Circuit Amps) on the unit informative plate. See Fig. 11 for power wiring connections to the unit load terminals and equipment ground.

Provide a ground-fault and short-circuit over-current protection device (fuse or breaker) per local code (or in absence of local code, is is recommended that U.S.A. standard, NEC Article 440, be followed). Refer to unit informative data plate for MOCP (Maximum Over-current Protection) device size.

All field wiring must comply with the appropriate national electrical codes and local requirements.

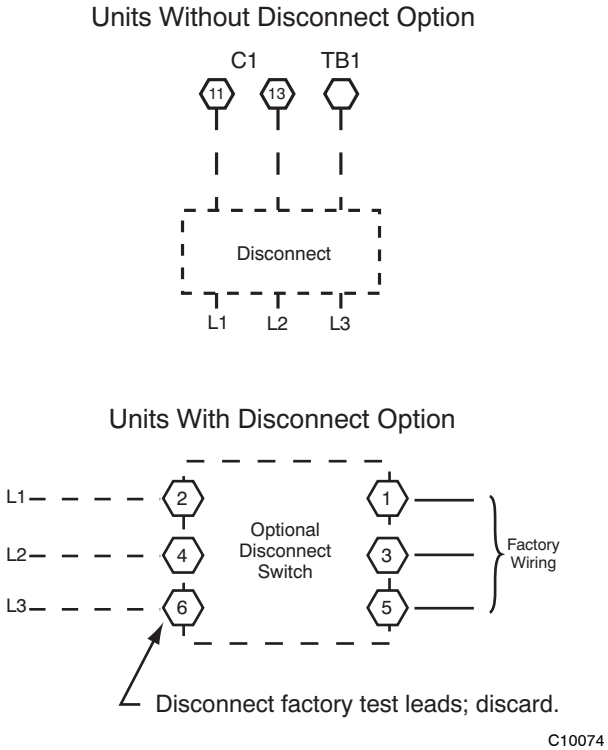

Fig. 11 - Power Wiring Connections

Affix the crankcase heater warning sticker to the unit disconnect switch.

All Units —

Voltage to compressor terminals during operation must be within voltage range indicated on unit nameplate. See Table 8. On 3-phase units, voltages between phases must be balanced within 2% and the current within 10%. Use the formula shown in the legend for Table 8, Note 5 (see page 16) to determine the percent of voltage imbalance. Operation on improper line voltage or excessive phase imbalance constitutes abuse and may cause damage to electrical components. Such operation would invalidate any applicable Carrier warranty.

Field Control Wiring — 38AUD unit control voltage is 24 v. See Fig. 18 and Fig. 19 for typical field control connections and the unit's label diagram for field-supplied wiring details. Route control wires to the 38AUD unit through the opening in unit's end panel to the connections terminal board in the unit's control box.

Remainder of the system controls connection will vary according to the specific construction details of the indoor section (air handler or packaged fan coil). Fig. 12 depicts typical connections to a Carrier 40RU fan coil unit. Plan for field connections carefully and install control wiring correctly per the project plan. Additional components and supplemental transformer accessory may be required.

The 38AUD unit requires an external temperature control device. This device can be a thermostat (field-supplied) or a PremierLink controller (available as a field-installed accessory, for use on a Carrier Comfort Network or as a stand alone control).

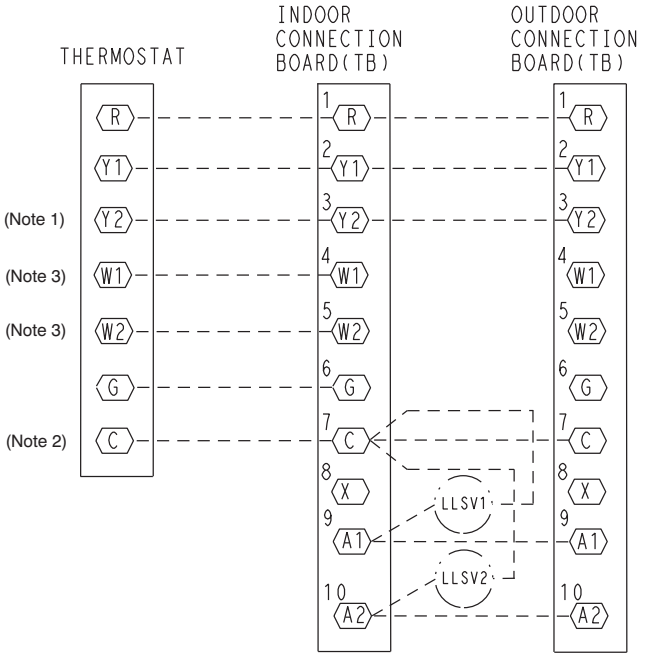

Note 1: Typical multi-function marking. Follow manufacturer's configuration instructions to select Y2.
Note 2: Connect only if thermostat requires 24-vac power source.
Note 3: Connect W1 and W2 if supplemental heaters are installed
– – – Field Wiring

C10078

Fig. 12 - Typical Remote Thermostat Connections

Thermostat —

Install a Carrier-approved accessory thermostat according to installation instructions included with the accessory. Locate the thermostat accessory on a solid wall in the conditioned space to sense average temperature in accordance with the thermostat installation instructions.

The 38AUD unit is a two-stage cooling unit. Select a two-stage cooling thermostat.

Select a thermostat cable or equivalent single leads of different colors with minimum of five leads for 38AUD units. Check the thermostat installation instructions for additional features which might require additional conductors in the cable.

For wire runs up to 15 m (50 ft.), use no. 18 AWG (American Wire Gage) insulated wire (35°C minimum). For 15 to 23 m (50 to 75 ft.), use no. 16 AWG insulated wire (35°C minimum). For over 23 m (75 ft.), use no. 14 AWG insulated wire (35°C minimum). All wire sizes larger than no. 18 AWG cannot be directly connected to the thermostat and will require a junction box and splice at the thermostat.

PremierLink (accessory installation) – Refer to Form 33CS-58SI for details on connecting the PremierLink controller and its various sensors.

CONTROL CIRCUIT WIRING — Control voltage is 24 v. See Fig. 18 and Fig. 19 and the unit's label diagram for field-supplied wiring details. Route control wires through the opening in unit's end panel to the connection in the unit's control box.

CONTROL TRANSFORMER WIRING — On multi voltage units, check the transformer primary wiring connections. See Fig. 13 or refer to the unit's label diagram.

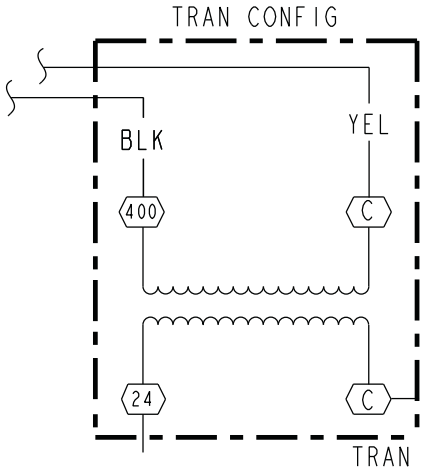

C10079

Fig. 13 - Control Transformer Wiring

Table 8 – Electrical Data — 38AUD*16-25 50 Hz Units

UNIT	V-Ph-Hz	VOLTAGE RANGE‡		COMPRESSOR 1		COMPRESSOR 2		OFM (ea)		MCA	FUSE SIZE
		MIN	MAX	RLA	LRA	RLA	LRA	WATTS	FLA		
38AUD*16	400–3–50	380	420	12.2	101	12.2	101	325	0.7	29.6	40
38AUD*25	400–3–50	380	420	16.7	111	16.7	111	325	0.7	40.4	50

Legend and Notes for Table 8

LEGEND:

FLA – Full Load Amps
LRA – Locked Rotor Amps
MCA – Minimum Circuit Amps
LRA – Locked rotor amps
NEC – National Electrical Code
RLA – Rated Load Amps

‡ Units are suitable for use on electrical systems where voltage supplied to the unit terminals is not below or above the listed limits.

NOTES:

1. In compliance with NEC requirements for multimotor and combination load equipment (refer to NEC Articles 430 and 440), the overcurrent protective device for the unit shall be fuse or HACR breaker.
2. The MCA values are calculated in accordance with the NEC. Article 440.
3. Motor RLA and LRA values are established in accordance with Underwriters' Laboratories (UL). Standard 1995.
4. **Unbalanced 3-Phase Supply Voltage**
   Never operate a motor where a phase imbalance in supply voltage is greater than 2%. Use the following formula to determine the percentage of voltage imbalance.

Example: Supply voltage is 230-3-60

$$\text{\% Voltage Imbalance} = 100 \times \frac{\text{max voltage deviation from average voltage}}{\text{average voltage}}$$

AB = 224 v
BC = 231 v
AC = 226 v

$$\text{Average Voltage} = \frac{(224 + 231 + 226)}{3} = \frac{681}{3}$$

$$= 227$$

Determine maximum deviation from average voltage.
(AB) 227 – 224 = 3 v
(BC) 231 – 227 = 4 v
(AC) 227 – 226 = 1 v
Maximum deviation is 4 v.
Determine percent of voltage imbalance.

$$\text{\% Voltage Imbalance} = 100 \times \frac{4}{227}$$

$$= 1.76\%$$

This amount of phase imbalance is satisfactory as it is below the maximum allowable 2%.

IMPORTANT: If the supply voltage phase imbalance is more than 2%, contact your local electric utility company immediately.

38AUD

PRE-START-UP

IMPORTANT: Before beginning Pre-Start-Up or Start-Up, review Start-Up Checklist at the back of this book. The Checklist assures proper start-up of a unit and provides a record of unit condition, application requirements, system information, and operation at initial start-up.

⚠ CAUTION

UNIT DAMAGE HAZARD

Failure to follow this caution may result in equipment damage.

Do not attempt to start the condensing unit, even momentarily, until the following steps have been completed. Compressor damage may result.

System Check

1. Check all air handler(s) and other equipment auxiliary components. Consult the manufacturer's instructions regarding any other equipment connected to the condensing unit. If the unit has field-installed accessories, be sure all are properly installed and correctly wired. If used, the airflow switch must be properly installed.
2. Be sure the unit is properly leak checked and dehydrated.
3. Check tightness of all electrical connections.
4. Open the liquid line and suction line service valves.
5. Be sure the unit is properly charged. See "Preliminary Charge", below.
6. The electrical power source must agree with the unit's nameplate rating.
7. The crankcase heater must be firmly attached to the compressor crankcase. Be sure the crankcase is warm (heater must be on for 24 hours before starting compressor).

Turn On Crankcase Heater — *Turn on the crankcase heater for 24 hours before starting the unit to be sure all the refrigerant is out of the oil*. To energize the crankcase heater, proceed as follows:

1. Set the space thermostat set point above the space temperature so there is no demand for cooling.
2. Close the field disconnect.

Preliminary Charge —Before starting the unit, charge liquid refrigerant into the high side of the system through the liquid service valve. The amount of refrigerant must be at least 80% of the operating charge listed in the Physical Data table (Tables 1A and 1B). Allow high and low side pressures to equalize before starting compressor. If pressures do not equalize readily, charge vapor on low side of system to assure charge in the evaporator. Refer to GTAC II, Module 5, Charging, Recover, Recycling, and Reclamation for liquid charging procedures.

⚠ CAUTION

UNIT DAMAGE HAZARD

Failure to follow this caution may result in equipment damage.

Prior to starting compressor, a preliminary charge of refrigerant must be added to avoid possible compressor damage.

START-UP

38AUD Units — The compressor crankcase heater must be on for 24 hours before start-up. After the heater has been on for 24 hours, the unit can be started. If no time elapsed since the preliminary charge step was completed, it is unnecessary to wait the 24-hour period.

PRELIMINARY CHECKS

1. Check that electric power supply agrees with unit nameplate data.
2. Verify that the compressor crankcase heater is securely in place.
3. Check that the compressor crankcase heater has been on at least 24 hours.
4. Recheck for leaks using the procedure outlined in the Pre-Start-Up section, Leak Test and Dehydration. If any leaks are detected, repair as required. Evacuate and dehydrate as described in the Leak Test and Dehydration section.
5. Ensure that the preliminary charge has been added as described in the Pre-Start-Up section, Preliminary Charge.
6. All internal wiring connections must be tight, and all barriers and covers must be in place.

NOTE: The 38AUD units are factory charged with the required amount of oil. If recharging in required, use Emkarate RL 32-3MAF for the 38AUD units.

COMPRESSOR ROTATION — On 3-phase units with scroll compressors, it is important to be certain that the compressor is rotating in the proper direction. 38AUD units are equipped with a Comfort Alert Diagnostic Module (CADM). Alert Code 7 indicates reverse power phasing.

To correct phase order:

1. Turn off power to the unit, tag disconnect.
2. Reverse any two of the unit power leads.
3. Reapply power to the compressor, verify correct pressures.

To verify the compressor is rotating in the proper direction:

1. Connect service gages to the suction and liquid pressure fittings.
2. Energize the compressor.
3. The suction pressure should drop and the liquid pressure should rise, as is normal on any start-up.

COMPRESSOR OVERLOAD — This overload interrupts power to the compressor when either the current or internal motor winding temperature becomes excessive, and automatically resets when the internal temperature drops to a safe level. This overload may require up to 60 minutes (or longer) to reset. If the internal overload is suspected of being open, disconnect the electrical power to the unit and check the circuit through the overload with an ohmmeter or continuity tester.

ADVANCED SCROLL TEMPERATURE PROTECTION (ASTP) — A label located above the terminal box identifies Copeland Scroll compressor models that contain this technology. See Fig. 14. Advanced Scroll Temperature Protection (ASTP) is a form of internal discharge temperature protection, that unloads the scroll compressor when the internal temperature reaches approximately 149°C (300°F). At this temperature, an internal bi-metal disk valve opens and causes the scroll elements to separate, which stops compression. Suction and discharge pressures balance while the motor continues to run. The longer the compressor runs unloaded, the longer it must cool before the bi-metal disk resets. See Fig. 15.

C10080

Fig. 14 - Advanced Scroll Temperature Protection Label

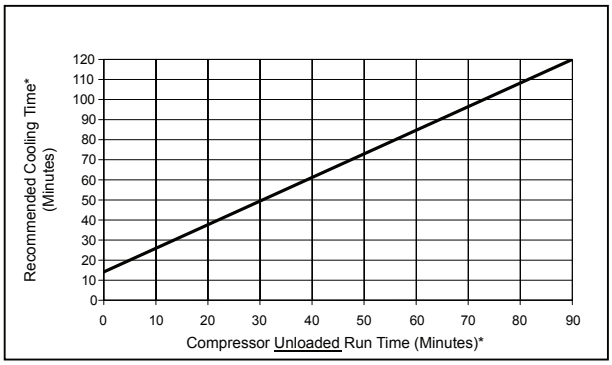

*Times are approximate.
NOTE: Various factors, including high humidity, high ambient temperature, and the presence of a sound blanket will increase cool-down times.

C10081

Fig. 15 - Recommended Minimum Cool-Down Time After Compressor is Stopped

To manually reset ASTP, the compressor should be stopped and allowed to cool. If the compressor is not stopped, the motor will run until the motor protector trips, which occurs up to 90 minutes later. Advanced Scroll Temperature Protection will reset automatically before the motor protector resets, which may take up to 2 hours.

START UNIT — Set the space thermostat to a set point above space temperature so that there is no demand for cooling. Close the 38AUD disconnect switch. Only the crankcase heater will be energized.

Reset the space thermostat below ambient so that a call for cooling is ensured.

⚠ CAUTION

UNIT DAMAGE HAZARD

Failure to follow this caution may result in equipment damage.

Never charge liquid into the low-pressure side of system. Do not overcharge. During charging or removal of refrigerant, be sure indoor-fan system is operating. Ensure both outdoor fan motors are running; bypass any Motormaster function.

ADJUST REFRIGERANT CHARGE — Refer to Cooling Charging Charts, Fig. 16 and Fig. 17. For applications with line lengths greater than 38m (125 ft), contact Carrier representative. Vary refrigerant until the conditions of the chart are met. Note that the charging charts are different from the type normally used. The charts are based on charging the units to the correct subcooling for the various operating conditions. Accurate pressure gage and temperature sensing device are required. Connect the pressure gage to the service port on the liquid line service valve. Mount the temperature sensing device on the liquid line close to the liquid line service valve, and insulate it so that outdoor ambient temperature does not affect the reading. Indoor airflow must be within the unit's normal operating range. Operate the unit for a minimum of 15 minutes. Ensure that pressure and temperature readings have stabilized. Plot the liquid pressure and temperature on chart and add or reduce the charge to meet the curve. Adjust the charge to conform with the charging chart, using the liquid pressure and temperature to read the chart.

FINAL CHECKS — Ensure that all safety controls are operating, control panel covers are on, and the service panels are in place.

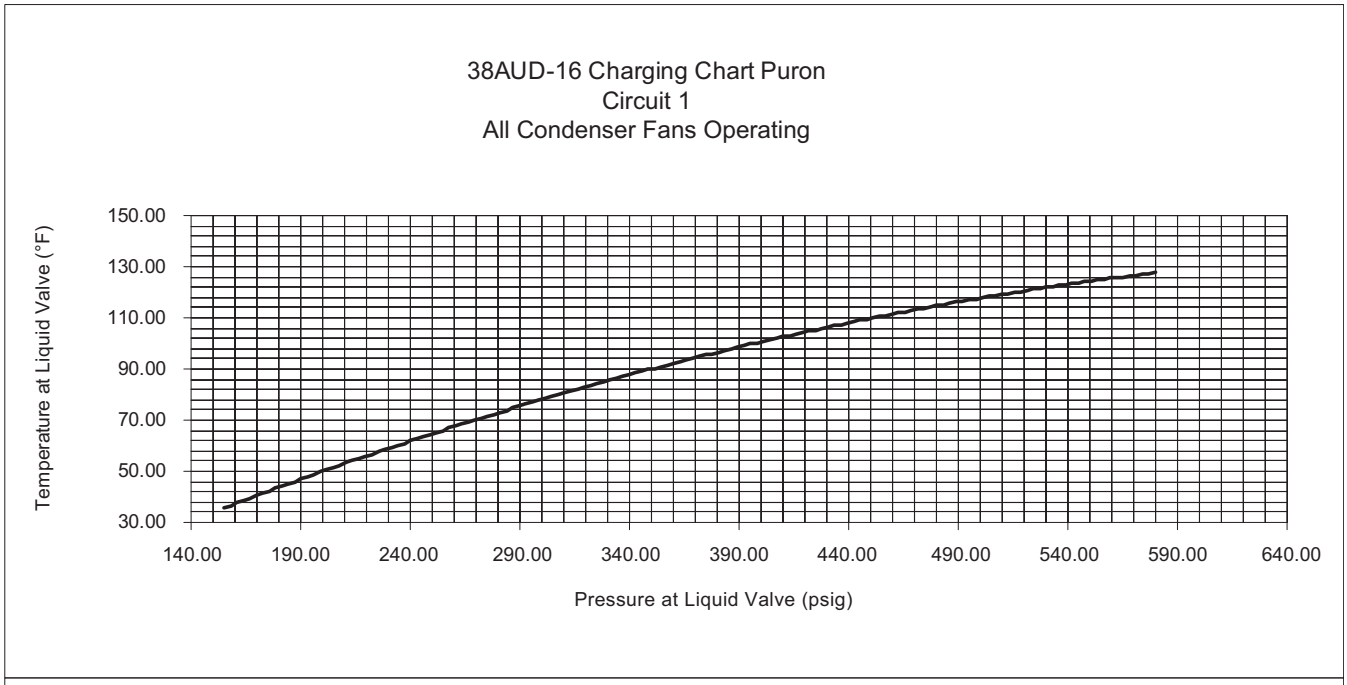

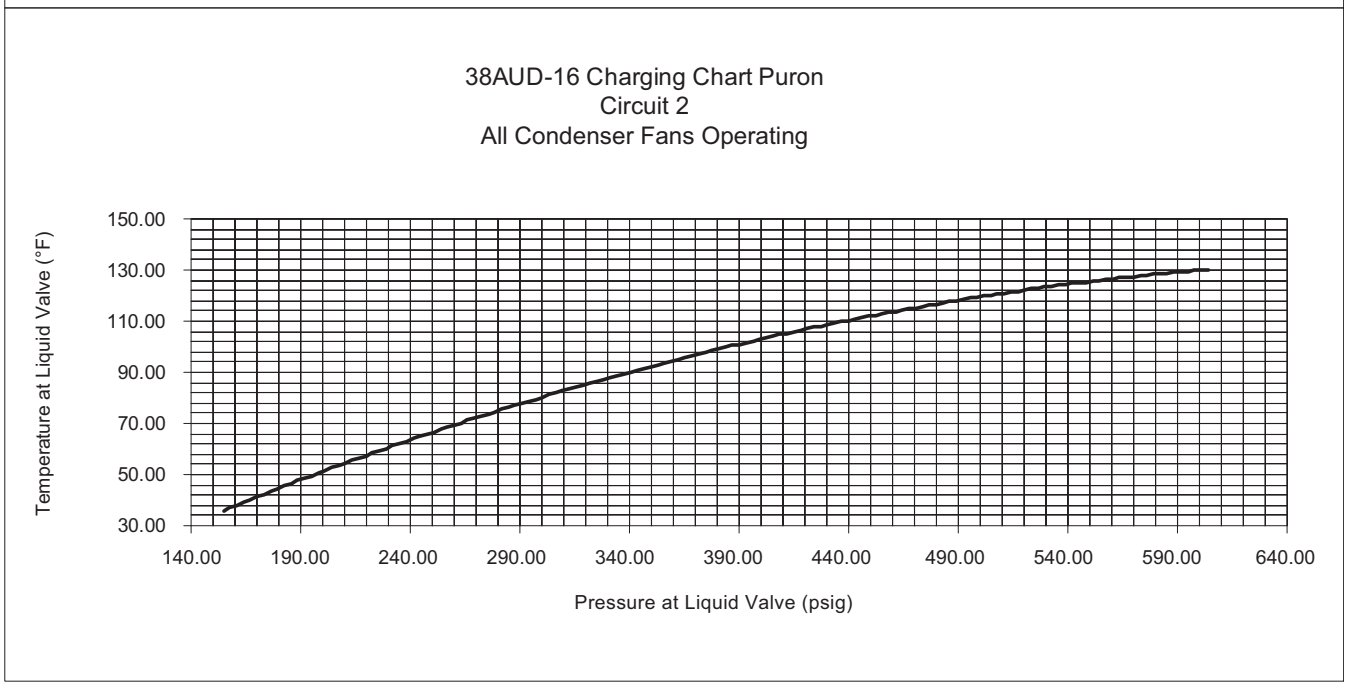

C10082

Fig. 16 - 38AUD*16 Charging Chart

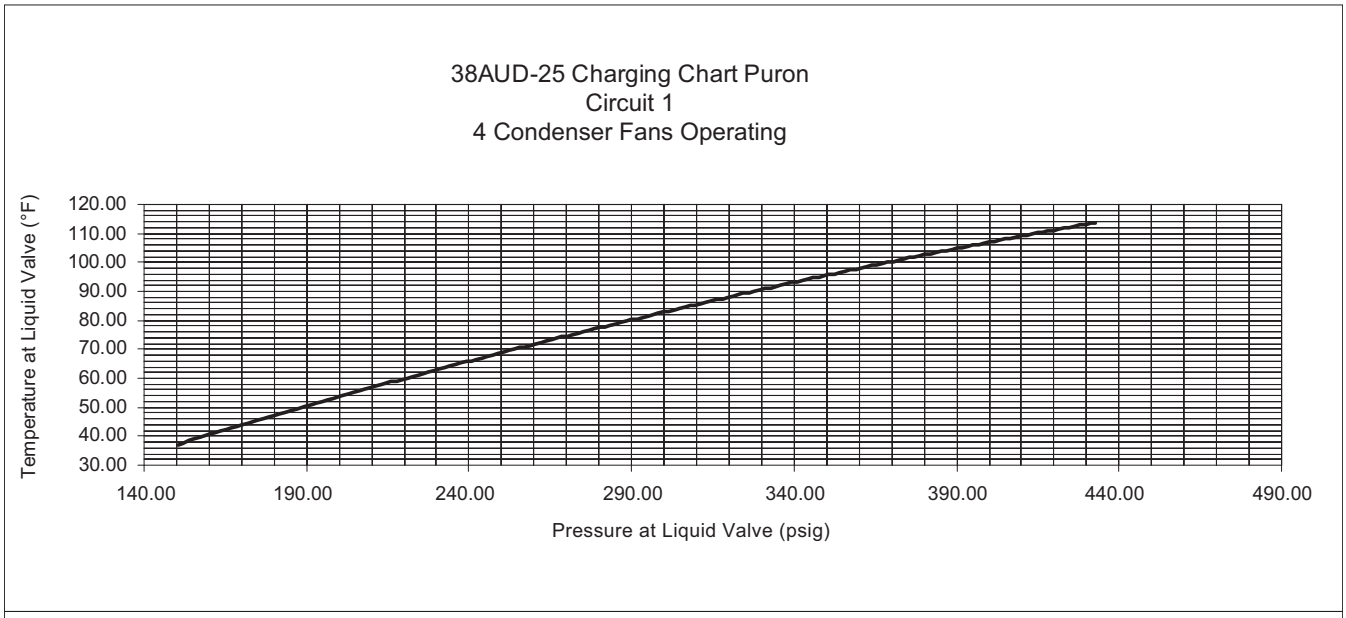

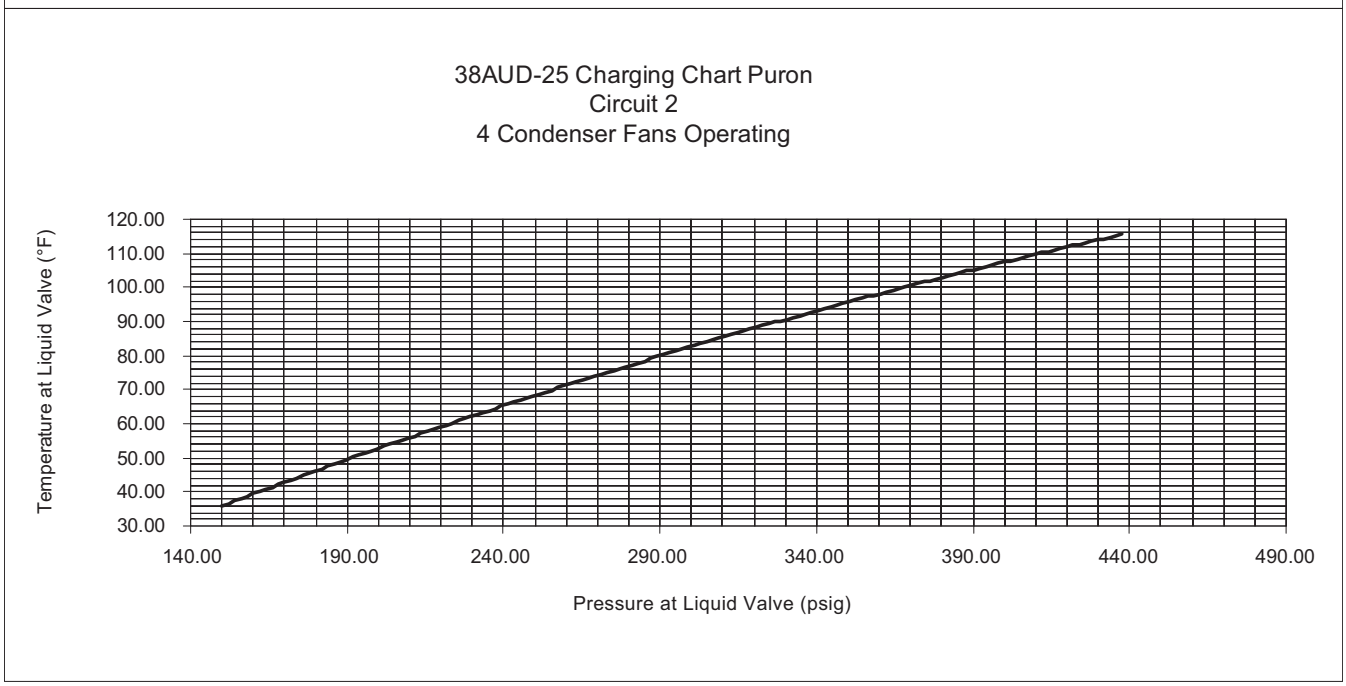

C10083

Fig. 17 - 38AUD*25 Charging Chart

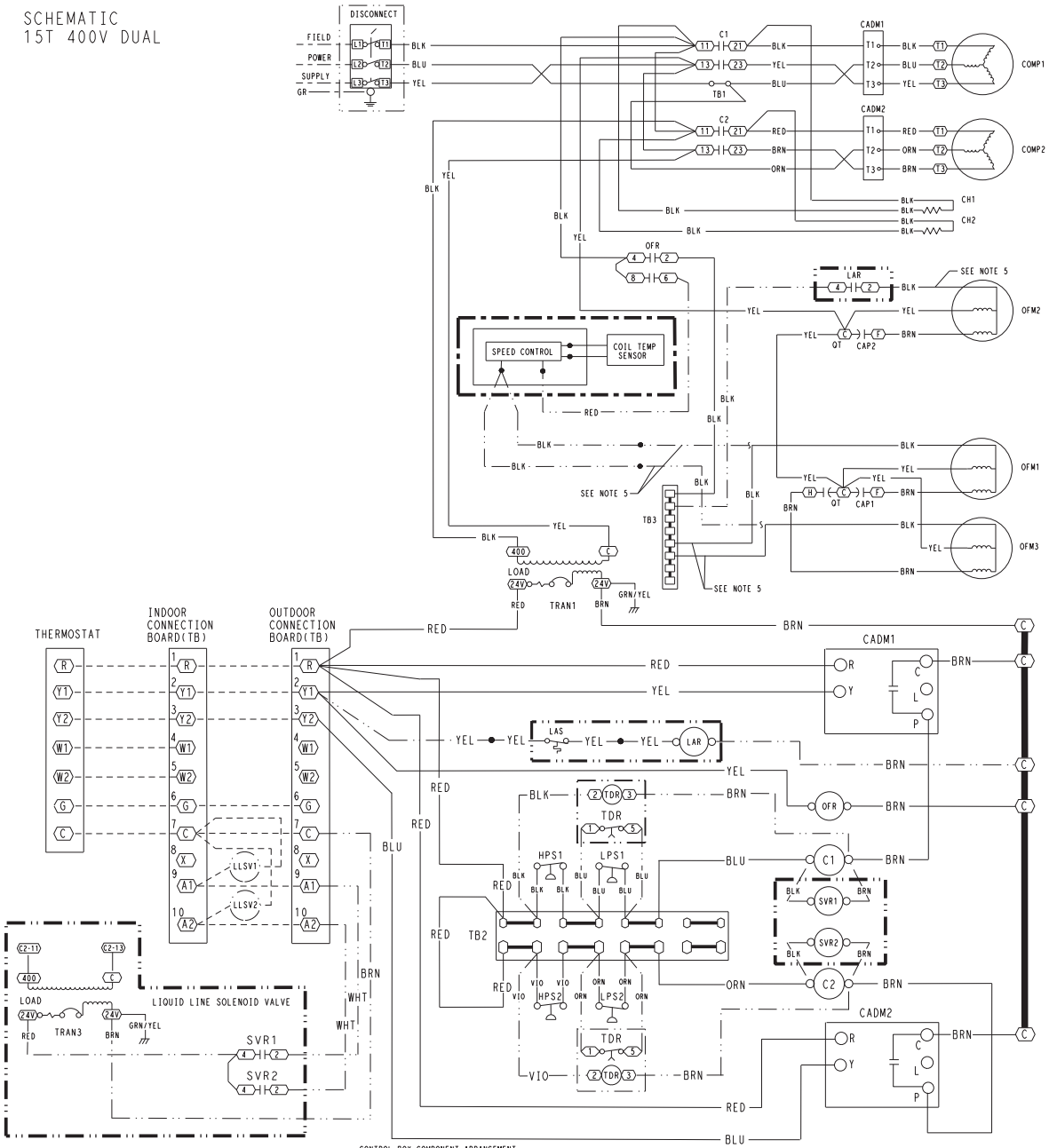

FIELD CONTROL WIRING

- FIELD SPLICE
- MARKED WIRE
- TERMINAL(MARKED)
- TERMINAL(UNMARKED)
- TERMINAL BLOCK
- SPLICE
- FACTORY WIRING
- FIELD CONTROL WIRING
- FIELD POWER WIRING
- ACCESSORY OR OPTIONAL WIRING
- TO INDICATE COMMON POTENTIAL ONLY, NOT TO REPRESENT WIRING

LEGEND

C	CONTACTOR, COMPRESSOR
CAP	CAPACITOR
CADM	COMFORT ALERT - DIAGNOSTICS MODULE
CH	CRANKCASE HEATER
COMP	COMPRESSOR MOTOR
EQUIP	EQUIPMENT
FU	FUSE
GR	GROUND
HPS	HIGH PRESSURE SWITCH
LAR	LOW AMBIENT RELAY
LAS	LOW AMBIENT SWITCH
LLSV	LIQUID LINE SOLENOID VALVE
LPS	LOW PRESSURE SWITCH
OFM	OUTDOOR FAN MOTOR
OFR	OUTDOOR FAN RELAY
QT	QUADRUPLE TERMINAL
SVR	SOLENOID VALVE RELAY
TB	TERMINAL BLOCK
TDR	TIME DELAY RELAY
TRAN	TRANSFORMER

NOTES:

1. IF ANY OF THE ORIGINAL WIRE FURNISHED MUST BE REPLACED, IT MUST BE REPLACED WITH TYPE 90 C WIRE OR ITS EQUIVALENT.
2. USE COPPER CONDUCTORS ONLY.
3. COMPRESSORS AND FAN MOTORS ARE THERMALLY PROTECTED. THREE PHASE MOTORS ARE PROTECTED AGAINST PRIMARY SINGLE PHASING CONDITIONS.
4. TRANSFORMER IS WIRED FOR 400V UNIT.
5. ON UNITS WITH SPEED CONTROL, CONNECT THE BLACK WIRES FROM OFM1 AND OFM3 TO BLK WIRES FROM SPEED CONTROL MODULE AND CONNECT THE BLACK WIRE FROM OFM2 TO TERMINAL 2 ON THE LOW AMBIENT RELAY (LAR).

C10084

Fig. 18 - Typical 38AUD*16 Wiring Diagram

SCHEMATIC
20T 400V DUAL

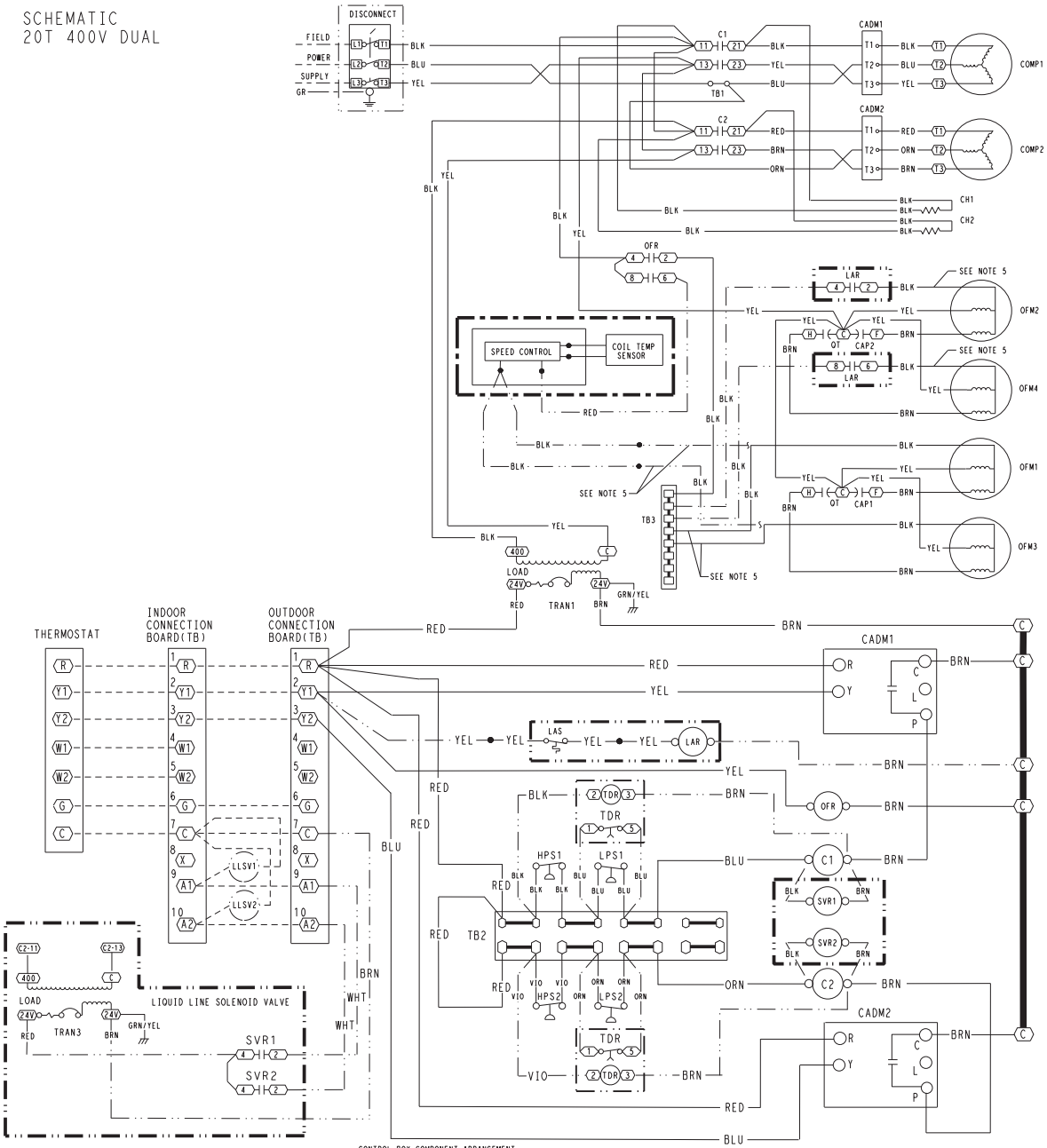

FIELD CONTROL WIRING

- FIELD SPLICE
- MARKED WIRE
- TERMINAL(MARKED)
- TERMINAL(UNMARKED)
- TERMINAL BLOCK
- SPLICE
- FACTORY WIRING
- FIELD CONTROL WIRING
- FIELD POWER WIRING
- ACCESSORY OR OPTIONAL WIRING
- TO INDICATE COMMON POTENTIAL ONLY, NOT TO REPRESENT WIRING

LEGEND

C	CONTACTOR, COMPRESSOR
CAP	CAPACITOR
CADM	COMFORT ALERT - DIAGNOSTICS MODULE
CH	CRANKCASE HEATER
COMP	COMPRESSOR MOTOR
EQUIP	EQUIPMENT
FU	FUSE
GR	GROUND
HPS	HIGH PRESSURE SWITCH
LAR	LOW AMBIENT RELAY
LAS	LOW AMBIENT SWITCH
LLSV	LIQUID LINE SOLENOID VALVE
LPS	LOW PRESSURE SWITCH
OFM	OUTDOOR FAN MOTOR
OFR	OUTDOOR FAN RELAY
QT	QUADRUPLE TERMINAL
SVR	SOLENOID VALVE RELAY
TB	TERMINAL BLOCK
TDR	TIME DELAY RELAY
TRAN	TRANSFORMER

NOTES:

1. IF ANY OF THE ORIGINAL WIRE FURNISHED MUST BE REPLACED, IT MUST BE REPLACED WITH TYPE 90 C WIRE OR ITS EQUIVALENT.
2. USE COPPER CONDUCTORS ONLY.
3. COMPRESSORS AND FAN MOTORS ARE THERMALLY PROTECTED. THREE PHASE MOTORS ARE PROTECTED AGAINST PRIMARY SINGLE PHASING CONDITIONS.
4. TRANSFORMER IS WIRED FOR 400V UNIT.
5. ON UNITS WITH SPEED CONTROL, CONNECT THE BLACK WIRES FROM OFM1 AND OFM3 TO BLK WIRES FROM SPEED CONTROL MODULE AND CONNECT THE BLACK WIRES FROM OFM2 AND OFM4 TO TERMINALS 2 AND 6 ON THE LOW AMBIENT RELAY (LAR).

C10085

Fig. 19 - Typical 38AUD*25 Wiring Diagram

OPERATING SEQUENCE

Base Unit Controls

Indoor (Supply) Fan

The indoor fan contactor (IFC) is remotely located at the fan coil or fan section. If the thermostat fan operation is selected as Continuous, the IFC is energized and the indoor (supply) fan motor runs continuously. If the thermostat fan operation is selected as Automatic, the IFC will be energized on a call for Cooling; indoor (supply) fan motor runs. When thermostat call for Cooling is satisfied, the IFC is de-energized and indoor (supply) fan motor stops.

Cooling, Unit Without Economizer

38AUD

On a thermostat call for Cooling, IFC will be energized and indoor (supply) fan motor runs. Thermostat output Y1 is energized; terminal Y1 at 38AUD unit receives 24-v. 24-v received at CADM1 terminal Y. If anti-recycle time delay period has not expired, CADM1 relay will remain open, de-energizing Solenoid Valve Relay 1 (SVR1) and preventing compressor start. When safety pressure switches are closed and CADM1 time delay expires, CADM1 relay closes, SVR1 and compressor contactor C1 are energized; liquid line solenoid valve LLSV1 opens, all outdoor fan motors start and Circuit 1 compressor starts.

On a thermostat calling for Stage 2 Cooling, thermostat output Y2 is energized; terminal Y2 at 38AUD unit receives 24-v. 24-v received at CADM2 terminal Y. If anti-recycle time delay period has not expired, CADM2 relay will remain open, de-energizing Solenoid Valve Relay 2 (SVR2) and preventing compressor start. When safety pressure switches are closed and CADM2 time delay expires, CADM2 relay closes, SVR2 and compressor contactor C2 are energized; liquid line solenoid valve LLSV2 opens and Circuit 2 compressor starts.

As space cooling load is satisfied, thermostat outputs Y2 and Y1 are de-energized, removing 24-v at 38AUD terminals Y2 and Y1. Circuit 2 compressor stops on Y2 opening; SVR2 is de-energized and LLSV2 closes. CADM2 begins its three-minute anti-recycle time delay. On Y1 opening, Circuit 1 compressor stops, all outdoor fan motors stop and SVR1 relay is de-energized. Liquid line solenoid valve LLSV1 is de-energized and valve closes. CADM1 begins its three-minute anti-recycle time delay.

If either the Low Pressure Switch or High Pressure Switch opens while thermostat output Y1 or Y2 remain energized, the compressor contactor is de-energized, the compressor stops and liquid line solenoid is de-energized (valve closes). CADM initiates a TRIP event (cooling demand sensed at CADM terminal Y but no current is measured at T1, T2, T3 motor sensors); CADM relay opens and RED LED is illuminated. TRIP condition maintains lockout of compressor operation until CADM is manually reset. Reset CADM by cycling unit main power.

Complete system shutdown may be caused by loss of main power, open compressor internal overload, open low-pressure or high-pressure switch, or a fault detected by the CADM logic. Compressor operation without cooling may indicate the compressor's ASTP feature is active; disconnect unit power and allow compressor to cool. See Service section for further details.

Cooling, Unit With Economizer

Refer to fan coil unit installation instructions and economizer accessory installation instructions for operating sequences when system is equipped with accessory economizer.

Heating

Refer to fan coil unit installation instructions and accessory heating device installation instructions for operating sequences in heating mode.

ROUTINE SYSTEM MAINTENANCE

These items should be part of a routine maintenance program, to be checked every month or two, until a specific schedule for each can be identified for this installation:

Quarterly Inspection
and 30 days after initial start)

Indoor section

- Condenser coil cleanliness checked.
- Return air filter replacement
- Outdoor hood inlet filters cleaned
- Belt tension checked
- Belt condition checked
- Pulley alignment checked
- Fan shaft bearing locking collar tightness checked
- Condensate drain checked

Seasonal Maintenance

These items should be checked at the beginning of each season (or more often if local conditions and usage patterns dictate):

Air Conditioning

- Condenser fan motor mounting bolts tightness
- Compressor mounting bolts
- Condenser fan blade positioning
- Control box cleanliness and wiring condition
- Wire terminal tightness
- Refrigerant charge level
- Evaporator coil cleaning
- Evaporator blower motor amperage

Heating

- Power wire connections
- Fuses ready
- Manual-reset limit switch is closed

Economizer or Outside Air Damper

Inlet filters condition

Check damper travel (economizer)

Check gear and dampers for debris and dirt

SERVICE

Refrigeration System

⚠ CAUTION

EQUIPMENT DAMAGE HAZARD

Failure to follow this caution may result in damage to equipment.

This system uses Puron® refrigerant which has higher pressures than R-22 and other refrigerants. No other refrigerant may be used in this system. Gage set, hoses, and recovery system must be designed to handle Puron. If you are unsure consult the equipment manufacturer.

Compressor Oil —

⚠ CAUTION

EQUIPMENT DAMAGE HAZARD

Failure to follow this caution may result in damage to equipment.

The compressor in a Puron system uses a polyolester (POE) oil. This oil is extremely hygroscopic, meaning it absorbs water readily. POE oils can absorb 15 times as much water as other oils designed for HCFC and CFC refrigerants. Take all necessary precautions to avoid exposure of the oil to the atmosphere.

Servicing Systems on Roofs With Synthetic Materials — POE (polyolester) compressor lubricants are known to cause long term damage to some synthetic roofing materials. Exposure, even if immediately cleaned up, may cause embrittlement (leading to cracking) to occur in one year or more. When performing any service which may risk exposure of compressor oil to the roof, take appropriate precautions to protect roofing. Procedures which risk oil leakage include but are not limited to compressor replacement, repairing refrigerants leaks, replacing refrigerant components such as filter drier, pressure switch, metering device, coil, accumulator, or reversing valve.

SYNTHETIC ROOF PRECAUTIONARY PROCEDURE

1. Cover extended roof working area with an impermeable polyethylene (plastic) drop cloth or tarp. Cover an approximate 3.3 x 3.3 m (10 x 10 ft) area.
2. Cover area in front of the unit service panel with a terry cloth shop towel to absorb lubricant spills and prevent run-offs, and protect drop cloth from tears caused by tools or components.
3. Place terry cloth shop towel inside unit immediately under component(s) to be serviced and prevent lubricant run-offs through the louvered openings in the base pan.
4. Perform required service.
5. Remove and dispose of any oil contaminated material per local codes.

Liquid Line Filter Drier — The factory-provided filter drier is specifically designed to operate with Puron®. Replace the filter drier with factory-authorized components only with a filter drier with desiccant made from 100% molecular sieve grade XH-11. Filter drier must be replaced whenever the refrigerant system is opened.

When removing a filter drier, use a tubing cutter to cut the drier from the system. **Do not unsweat a filter drier** from the system. Heat from unsweating will release moisture and contaminants from drier into system.

Field Refrigerant Access Ports — Field service access to refrigerant pressures is through the access ports located at the service valves (see Figs 26 and 28). These ports are $^1/_4$-in SAE Flare couplings with Schrader check valves and service caps. Use these ports to admit nitrogen to the field tubing during brazing, to evacuate the tubing and evaporator coil, to admit initial refrigerant charge into the low-side of the system and when checking and adjusting the system refrigerant charge. When service activities are completed, ensure the service caps are in place and secure; check for leaks. If the Schrader check valve must be removed and re-installed, tighten to 23-34 N-cm (2-3 in-lbs).

Factory High-Flow Access Ports — There are two additional access ports in the system - on the suction tube between the compressor and the suction service valve and on the liquid tube near the liquid service valve (see Fig. 23 and Fig. 25). These are brass fittings with black plastic caps. The hose connection fittings are standard $^1/_4$-in SAE Male Flare couplings.

The brass fittings are two-piece High Flow valves, with a receptacle base brazed to the tubing and an integral spring-closed check valve core screwed into the base. (See Fig. 20.) This check valve is permanently assembled into this core body and cannot be serviced separately; replace the entire core body if necessary. Service tools are available from RCD that allow the replacement of the check valve core without having to recover the entire system refrigerant charge. Apply compressor refrigerant oil to the check valve core's bottom o-ring. Install the fitting body with 1085 ±23 N-cm (96 ±-10 in-lbs) of torque; do not overtighten.

Comfort Alert Diagnostic Module

The Comfort Alert Diagnostic Module (CADM) monitors and analyzes data from the Copeland Scroll® three-phase compressor and the thermostat demand. The CADM also provides a 3-minute anti-recycle time delay to compressor cycling.

The CADM detects causes for electrical and system related failures without any sensors. Flashing LEDs communicate the Alert codes to guide service technicians in accurately and quickly troubleshooting the system and determining root cause for the failure.

Inputs to the CADM include 24-vac power, thermostat Y1, compressor contactor coil (common side) and compressor power leads (from the compressor contactor).

Input	Terminal	Voltage
Control Power	R	24-V
Control Common	C	24-V
Cooling	Y	24-V
Contactor Coil	P	24-V
Line A	T1	Line
Line B	T2	Line
Line C	T3	Line

Control of the compressor contactor coil is through a normally-closed (power on the module) contact between terminals P and C.

Communications of status and alert conditions is through three LEDs located on the top edge of the module housing (see Fig. 21): POWER (green), ALERT (yellow), and TRIP (red).

The POWER LED indicates the presence of control power to the CADM.

The ALERT LED indicates an abnormal condition exists in the system through a flash code. The ALERT LED will blink a number of times consecutively, pause and the repeat the process. The number of blinks, defined in Table 9, correlates to a particular abnormal condition; troubleshooting tips are provided for each Alert code. Reset of the ALERT may be automatic or manual. If the fault condition causing the Alert is self-corrected, the Alert code will be removed and the CADM will automatically reset and allow the system to restart normally. Manual reset requires that main power to the 38AUD unit be recycled after the cause for the Alert condition has been detected and corrected.

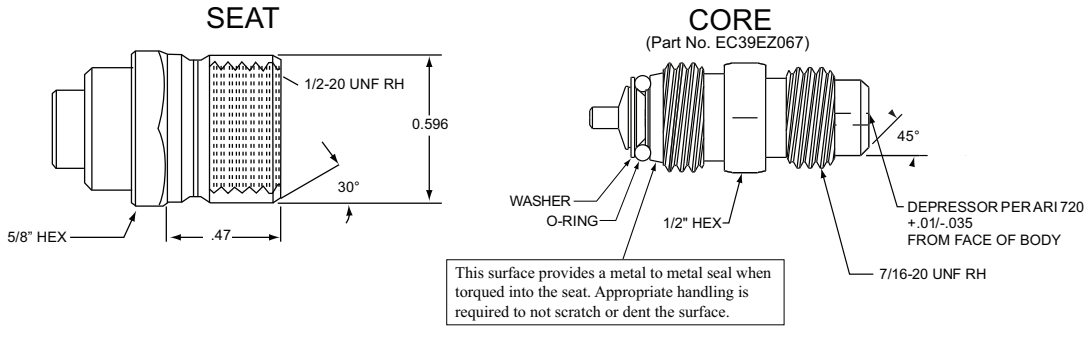

Fig. 20 - CoreMax Access Port Assembly

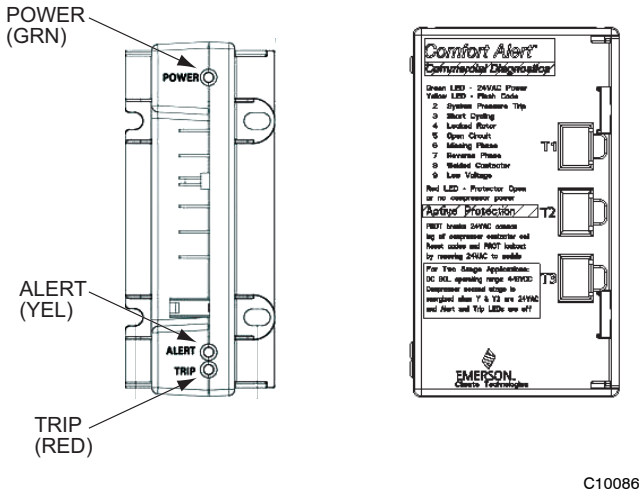

Fig. 21 - CADM Housing/LED Locations

The TRIP LED indicates either a time-delay period is currently active (RED LED is blinking) or the module has locked out the compressor (RED LED is on steady). A lockout condition will occur when the CADM detects a thermostat demand at input Y but there is no power at the compressor line terminals T1 or T2 or T3. This lockout can occur due to a safety switch (LPS or HPS) opening and de-energizing the compressor contactor, the compressor-motor internal overload opens, or other internal power interruption has occurred. Reset of the TRIP LED requires that unit main power be recycled after the loss of power to the compressor condition has been detected and corrected.

Simultaneous Blinking of YELLOW and RED LEDs indicates control power input to the CADM is low. Check control circuit transformer and wiring.

Troubleshooting the CADM Wiring – Flashing LEDs also indicate wiring problems to the CADM. See Table 10 for discussion of additional LED flash codes and troubleshooting instructions.

Table 9 – LED Status Codes

Status LED	Status LED Description	Status LED Troubleshooting Information
Green "POWER"	Module has power	Supply voltage is present at module terminals
Red "TRIP" LED On Solid	Thermostat demand signal Y is present, but the compressor is not running.	1. Compressor protector is open 2. Condensing unit power disconnect is open 3. Compressor circuit breaker or fuse(s) is open 4. Broken supply wires or connector is not making contact 5. Compressor power wires not routed through Comfort Alert 6. Compressor contactor has failed open
Red "TRIP" LED Flashing	The anti-short cycle timer (3 minutes), in module is preventing compressor restart.	
Module locks out compressor when compressor damaging ALERT code appears. Lockout ALERT codes are noted in the Status LED Description. During a compressor lock out, 24VAC power must be removed from module to manually reset.		
Yellow "ALERT" LED On Solid	A short circuit or over current condition exists on PROT terminal.	1. Compressor contactor coil shorted 2. Electrical load too high for PROT circuit (maximum 1 Amp) 3. 24 V AC wired directly to PROT terminal
Yellow "ALERT" Flash Code 2	System Pressure Trip Discharge pressure out of limits or compressor overload (if no high pressure switch in system) LOCKOUT	1. High head pressure 2. Condenser coil poor air circulation (dirty, blocked, damaged) 3. Condenser fan is not running 4. If low pressure switch is open: Refer to Code 3 for troubleshooting
Yellow "ALERT" Flash Code 3	Short Cycling Compressor is running only briefly LOCKOUT	1. If low pressure switch is open: a. Low refrigerant charge b. Evaporator blower is not running c. Evaporator coil is frozen d. Faulty metering device e. Condenser coil is dirty f. Liquid line restriction (filter drier blocked if present) 2. If high pressure switch is open, go to Flash Code 2 information 3. Intermittent thermostat demand signal 4. System or control board defective
Yellow "ALERT" Flash Code 4	Locked Rotor LOCKOUT	1. Low line voltage to compressor 2. Excessive liquid refrigerant in compressor 3. Compressor bearings are seized
Yellow "ALERT" Flash Code 5	Open Circuit	1. Condensing unit power disconnect is open 2. Compressor circuit breaker or fuses are open 3. Compressor contactor has failed open 4. High pressure switch is open and requires manual reset 5. Broken supply wires or connector is not making contact 6. Unusually long compressor protector reset time due to extreme ambient temperature 7. Compressor windings are damaged
Yellow "ALERT" Flash Code 6	Missing Phase LOCKOUT	1. Compressor fuse is open on one phase 2. Broken wire or connector on one phase 3. Compressor motor winding is damaged 4. Utility supply has dropped one phase
Yellow "ALERT" Flash Code 7	Reverse Phase LOCKOUT	1. Compressor running backward due to supply phase reversal
Yellow "ALERT" Flash Code 8	Welded Contactor Compressor always runs	1. Compressor contactor has failed closed 2. Thermostat demand signal not connected to module
Yellow "ALERT" Flash Code 9	Low Voltage Control circuit < 18VAC	1. Control circuit transformer is overloaded 2. Low line voltage to compressor

Table 10 – CADM Troubleshooting

Miswired Module Indication	Recommended Troubleshooting Action
Green LED is not on, module does not power up	Determine if both R and C module terminals are connected. Verify voltage in present at module's R and C terminals. **NOTE:** The CADM requires a constant nominal 24VAC power supply. The wiring to the module's R and C terminals must be directly from the control transformer. The module cannot receive its power from another device that will interrupt the 24VAC power supply. See the 38AUD Wiring Diagrams (Fig. 18 and Fig. 19).
Green LED Intermittent, module powers up only when compressor runs	Determine if R and Y terminals are wired in reverse. Verify module's R and C terminals have a constant source. See "**NOTE**" above for details on R and C wiring.
TRIP LED is on but system and compressor check OK	Verify Y terminal is wired properly per the 38AUD wiring diagram (see Fig. 18 and Fig. 19). Verify voltage at contactor coil falls below 0.5VAC when off. Verify 24VAQC is present across Y and C when thermostat demand signal is present. If not, R and C are reverse wired.
TRIP LED and ALERT LED flashing together	Verify R and C terminals are supplied with 19-28VAC.
ALERT Flash Code 3 (Compressor Short Cycling) displayed incorrectly	Verify Y terminal is connected to 24VAC at contactor coil. Verify voltage at contactor coil falls below 0.5VAC when off.
ALERT Flash Code 5 or 6 (Open Circuit, Missing Phase) displayed incorrectly	Check that compressor T1 and T3 wires are through module's current sensing holes. Verify Y terminal is connected to 24VAC at contactor coil. Verify voltage at contactor coil falls below 0.5VAC when off.
Alert Flash Code * (Welded Contactor) displayed incorrectly	Determine if module's Y terminal is connected. Verify Y terminal is connected to 24VAC at contactor coil. Verify 24VAC is present across Y and C when thermostat demand signal is present. If not, R and C are reverse wired. Verify voltage at contactor coil falls below 0.5VAC when off.

Crankcase Heater — The heater prevents refrigerant migration and compressor oil dilution during shutdown whenever compressor is not operating. The heater is wired to cycle with the compressor; the heater is off when compressor is running, and on when compressor is off.

The crankcase heater will operate as long as the power circuit is energized.

Compressor Protection

COMPRESSOR OVERTEMPERATURE PROTECTION (IP) — A thermostat installed on the compressor motor winding reacts to excessively high winding temperatures and shuts off the compressor.

CRANKCASE HEATER — The heater minimizes absorption of liquid refrigerant by oil in the crankcase during brief or extended shutdown periods. The main disconnect must be on to energize the crankcase heater.

IMPORTANT: Never open any switch or disconnect that energizes the crankcase heater unless unit is being serviced or is to be shut down for a prolonged period. After a prolonged shutdown on a service job, energize the crankcase heater for 24 hours before starting the compressor.

ADVANCED SCROLL TEMPERATURE PROTECTION (ASTP) — See "Advanced Scroll Temperature Protection (ASTP)" on page 18.

Low-Pressure Switch — The low-pressure switch is stem-mounted on the suction line. Switches are all fixed, non-adjustable type.

High-Pressure Switch — The high-pressure switch is stem mounted on the discharge line. The switch is a fixed, non-adjustable type.

Outdoor Fans — Each fan is supported by a formed-wire mount bolted to the fan deck and covered with a wire guard. Fan motors have permanently lubricated bearings.

Lubrication

FAN MOTORS have sealed bearings. No provisions are made for lubrication.

COMPRESSOR has its own oil supply. Loss of oil due to a leak in the system should be the only reason for adding oil after the system has been in operation.

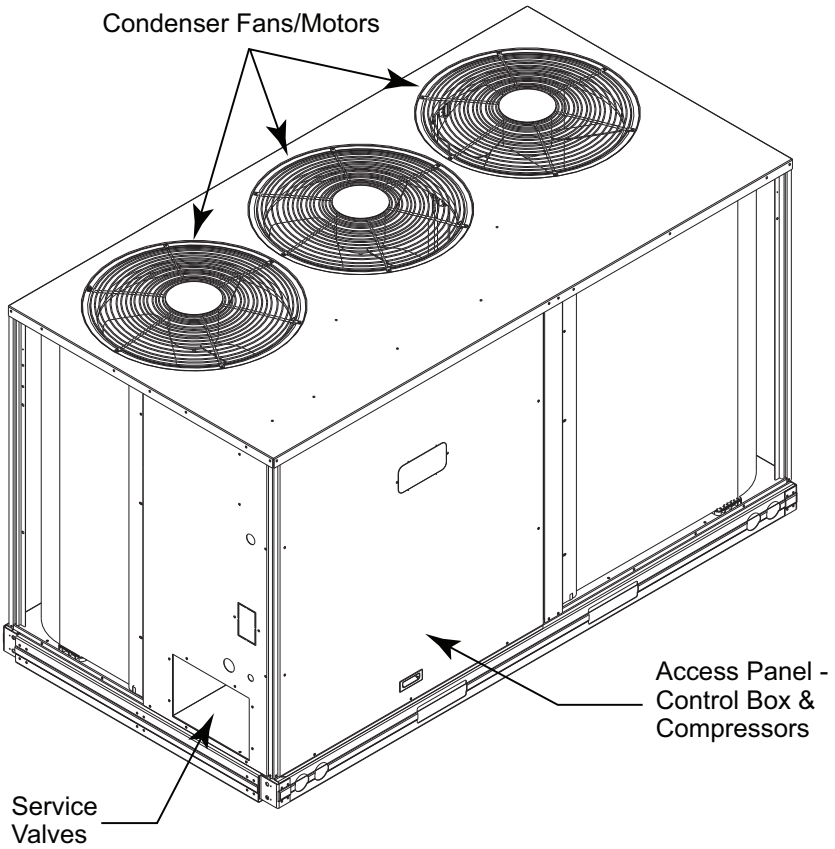

C10087

Fig. 22 - 38AUD Size 16 Cabinet

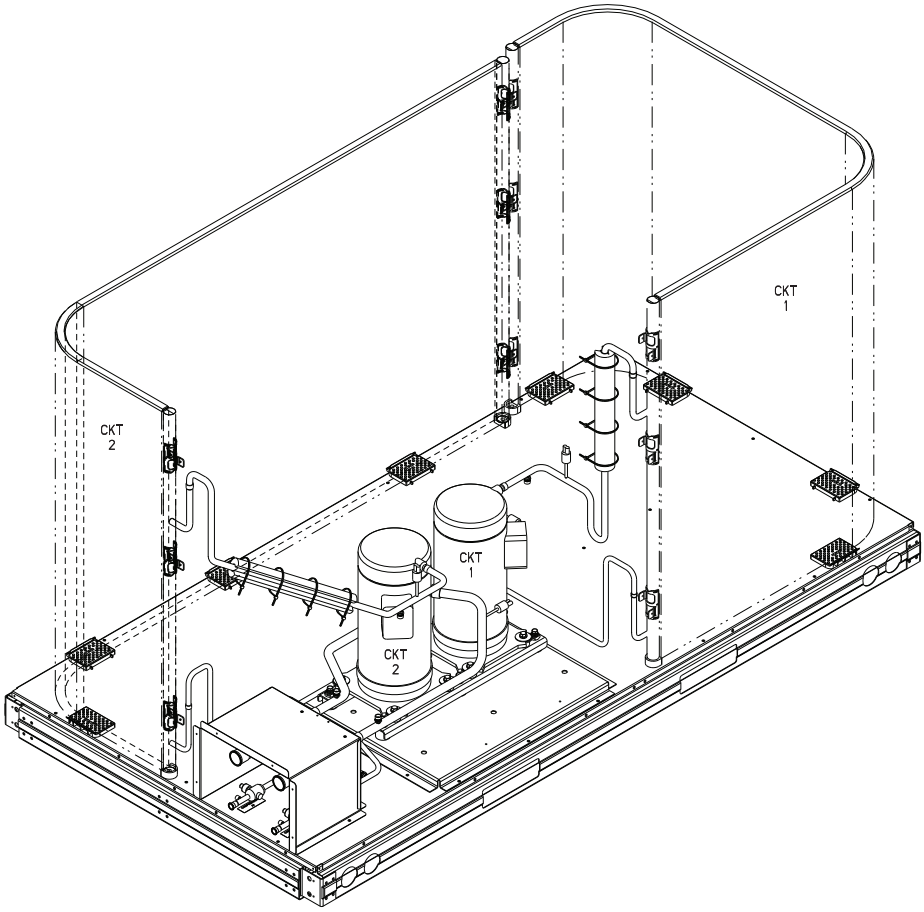

C10095

Fig. 23 - 38AUD*16 Piping

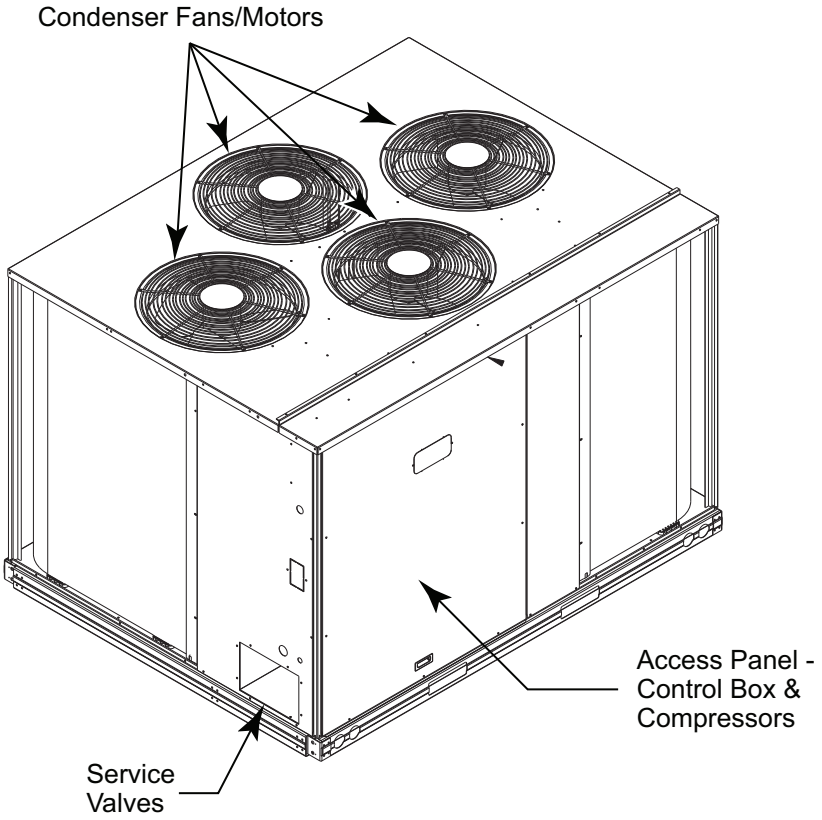

Fig. 24 - 38AUD Size 25 Cabinet

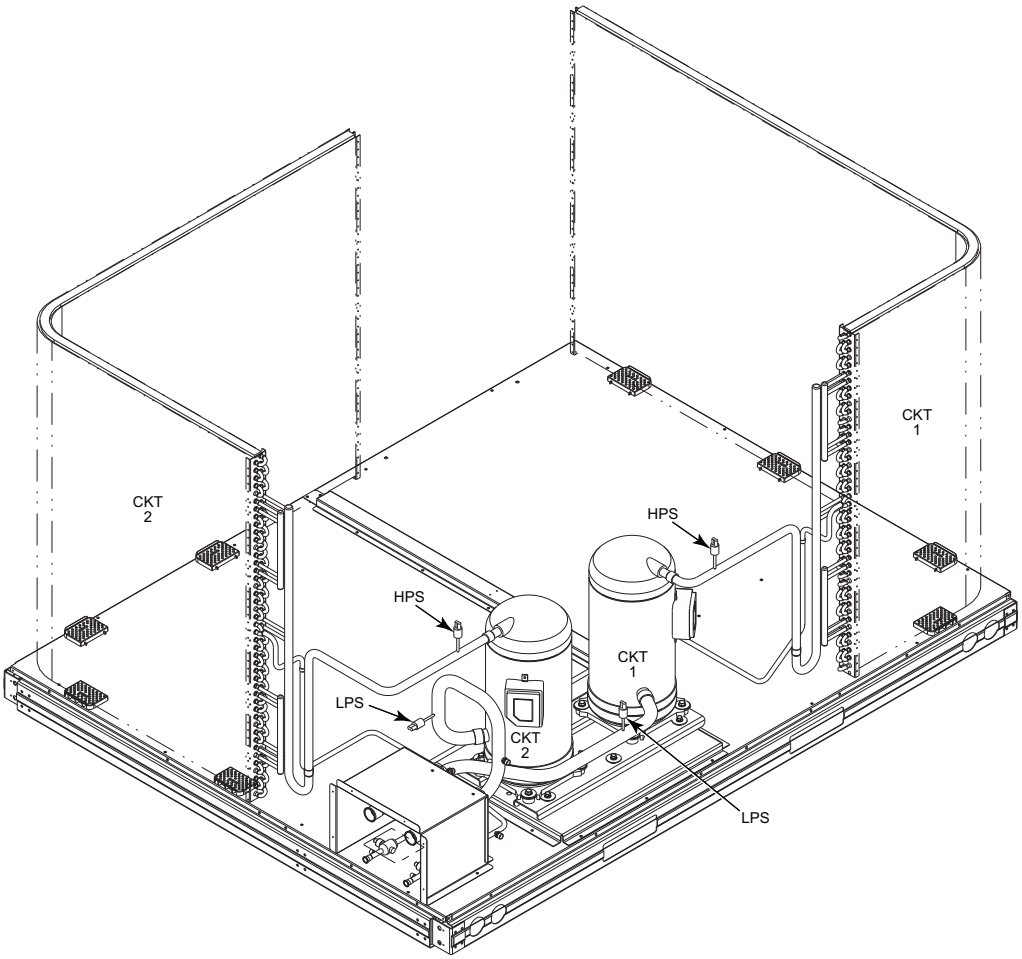

Fig. 25 - 38AUD*25 Piping

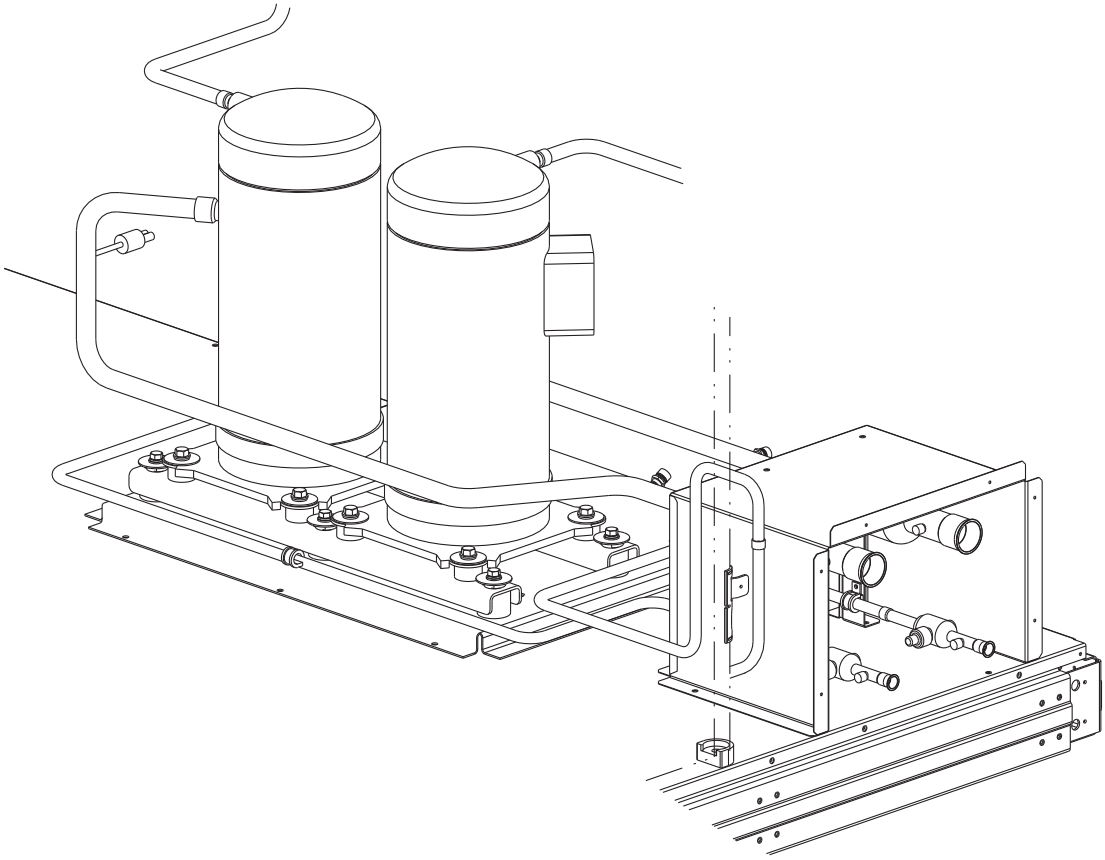

C10088

Fig. 26 - 38AUD*16 Compressor Assembly (Rear View)

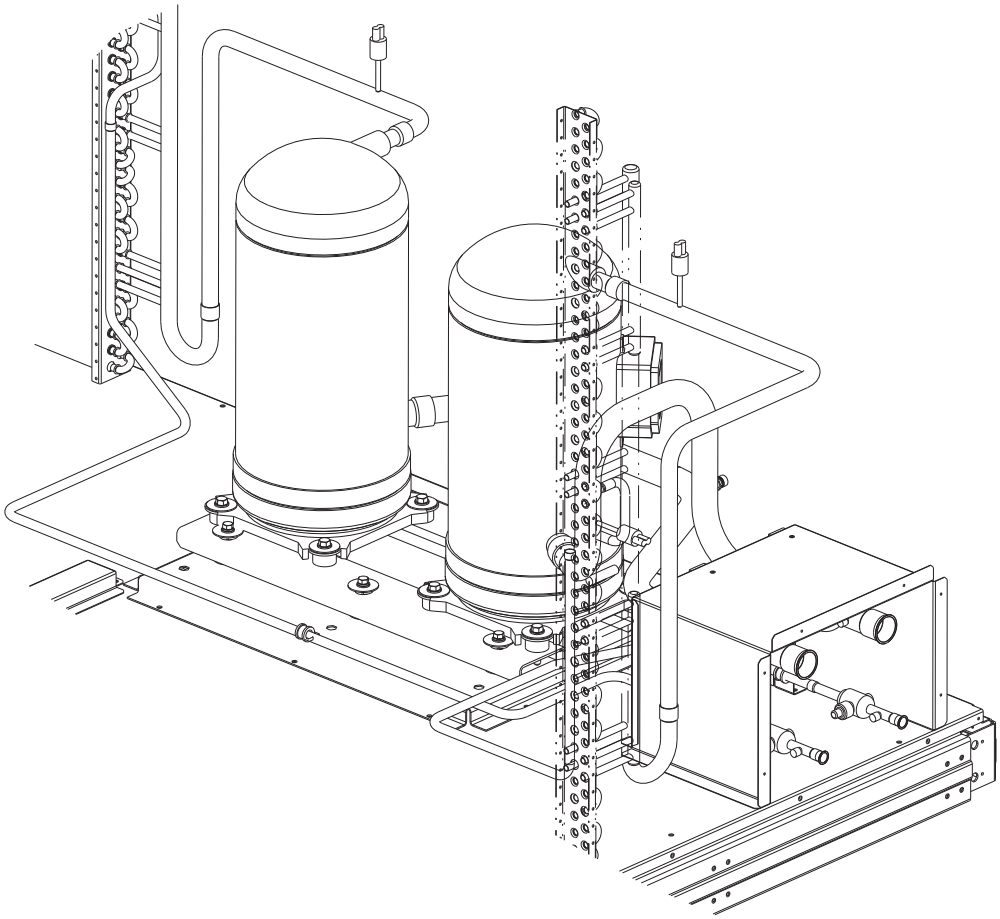

C10091

Fig. 27 - 38AUD*25 Compressor Assembly (Rear View)

NOVATION™ Coil Cleaning and Maintenance — To clean the NOVATION condenser coil, chemicals are NOT to be used; only water is approved as the cleaning solution. Only clean potable water is authorized for cleaning NOVATION condensers.

Clean the coil as follows:

1. Turn off unit power.
2. Remove screws holding rear corner posts and top cover in place. Pivot top cover up 305 to 457 mm (12 to 18 in.) and support with a rigid support. See Fig. 27.

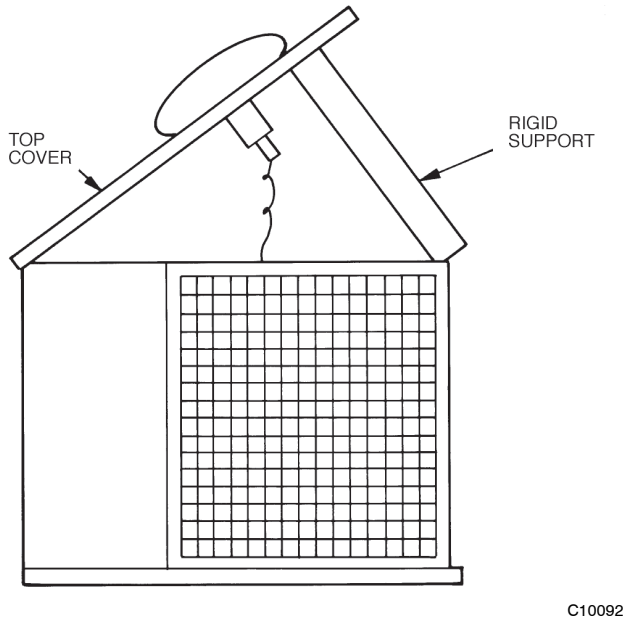

Fig. 28 - Pivot and Support Top Cover

3. Carefully remove any foreign objects or debris attached to the coil face or trapped within the mounting frame and brackets.
4. Using a high pressure water sprayer, purge any soap or industrial cleaners from hose and/or dilution tank prior to wetting the coil. Clean condenser face by spraying the coil core steadily and uniformly from top to bottom, directing the spray straight into or toward the coil face. Do not exceed 6205 kPa (900 psig) or a 45 degree angle; nozzle must be at least 30 cm (12 in.) from the coil face. Reduce pressure and use caution to prevent damage to air centers (fins). Do not fracture the braze between air centers and refrigerant tubes. Allow water to drain from the coil core and check for refrigerant leaks prior to start up.
5. Replace top cover and rear corner posts.

⚠ CAUTION

EQUIPMENT DAMAGE HAZARD

Failure to follow this caution may result in equipment damage.

Chemical cleaning should NOT be used on the aluminum microchannel (NOVATION) condenser. Damage to the coil may occur. Only approved cleaning is recommended.

Repairing NOVATION Condenser Tube Leaks

RCD offers service repair kit Part Number 50TJ660007 for repairing tube leaks in the NOVATION coil crosstubes. This kit includes approved braze materials (aluminum fluxcore braze rods), a heat shield, a stainless steel brush, replacement fin segments, adhesive for replacing fin segments, and instructions specific to the NOVATION aluminum coil. See EPIC for instruction sheet 99TA526379.

The repair procedure requires the use of MAPP gas and torch (must be supplied by servicer) instead of conventional oxyacetylene fuel and torch. While the flame temperature for MAPP is lower than that of oxyacetylene (and thus provides more flexibility when working on aluminum), the flame temperature is still higher than the melting temperature of aluminum, so user caution is required. Follow instructions carefully. Use the heat shield.

Replacing NOVATION Condenser Coil

The service replacement coil is preformed and is equipped with transition joints with copper stub tubes. When brazing the connection joints to the unit tubing, use a wet cloth around the aluminum tube at the transition joint. Avoid applying torch flame directly onto the aluminum tubing.

Routine Cleaning of Round-Tube Plate Fin (RTPF) Coils — Periodic cleaning with Totaline® environmentally sound coil cleaner is essential to extend the life of RTPF coils. This cleaner is available from Carrier Replacement parts division as part number P902-0301 for a one gallon container, and part number P902-0305 for a 5 gallon container. It is recommended that all RTPF coils, with the exception of NOVATION coils, be cleaned with the Totaline environmentally sound coil cleaner as described below.

NOTE: Do NOT use Totaline® environmentally sound coil cleaner, or any other coil cleaner on NOVATION coils. See "NOVATION Coil Cleaning and Maintenance" for instructions on cleaning NOVATION coils.

Coil cleaning should be part of the unit's regularly scheduled maintenance procedures to ensure long life of the coil. Failure to clean the coils may result in reduced durability in the environment.

Avoid the use of:

- coil brighteners
- acid cleaning prior to painting
- high pressure washers
- poor quality water for cleaning

Totaline environmentally sound coil cleaner is non-flammable, hypoallergenic, non-bacterial, and a USDA accepted biodegradable agent that will not harm the coil or surrounding components such as electrical wiring, painted metal surfaces, or insulation. Use of non-recommended coil cleaners is strongly discouraged since coil and unit durability could be affected.

Totaline Environmentally Sound Coil Cleaner Application Equipment

- $2^1/_2$ gallon garden sprayer
- water rinse with low velocity spray nozzle

⚠ CAUTION

UNIT DAMAGE HAZARD

Failure to follow this caution may result in corrosion and damage to the unit.

Harsh chemicals, household bleach or acid or basic cleaners should not be used to clean outdoor or indoor coils or any kind. These cleaners can be very difficult to rinse out of the coil and can accelerate corrosion at the fin/tube interface where dissimilar materials are in contact. If there is dirt below the surface of the coil use the Totaline environmentally sound coil cleaner as described above.

⚠ CAUTION

UNIT RELIABILITY HAZARD

Failure to follow this caution may result in reduced unit performance.

High velocity water from a pressure washer, garden hose, or compressed air should never be used to clean a coil. The force of the water or air jet will bend the fin edges and increase airside pressure drop.

Totaline Environmentally Sound Coil Cleaner Application Instructions

NOTE: Proper eye protection such as safety glasses is recommended during mixing and application.

1. Turn off unit power.
2. Remove screws holding rear corner post and top cover in place. Pivot top cover up 305 to 457 mm (12 to 18 in.) and support with a rigid support. See Fig. 27.
3. Remove all surface loaded fibers and dirt with a vacuum cleaner. If a vacuum cleaner is not available, a soft non-metallic bristle brush may be used. In either case, the tool should be applied in the direction of the fins. Coil surfaces can be easily damaged (fin edges can be easily bent over and damage to the coating of a protected coil) if the tool is applied across the fins.

NOTE: Use of a water stream, such as a garden hose, against surface loaded coil will drive the fibers and dirt into the coil, making cleaning efforts more difficult. Surface loaded fibers must be completely removed prior to using low velocity clean water rinse.

4. Using a low velocity garden hose thoroughly wet finned surfaces with clean water. Be careful not to bend the fins.
5. Mix Totaline environmentally sound coil cleaner in a $2^1/_2$ gallon garden sprayer according to the instructions included with the cleaner. The optimum solution temperature is 38°C (100°F).

NOTE: Do NOT USE water in excess of 54°C (130°F), as the enzymatic activity will be destroyed.

6. Thoroughly apply Totaline environmentally sound coil cleaner solution to all coil surfaces including the finned area, tube sheets and coil headers.
7. Hold garden sprayer nozzle close to finned areas and apply cleaner with a vertical, up-and-down motion. Avoid spraying in horizontal pattern to minimize potential for fin damage.
8. Ensure cleaner thoroughly penetrates deep into finned areas.
9. Interior and exterior finned areas must be thoroughly cleaned.
10. Finned surfaces should remain wet with cleaning solution for 10 minutes.
11. Ensure surfaces are not allowed to dry before rinsing. Reapply cleaner as needed to ensure 10-minute saturation is achieved.
12. Thoroughly rinse all surfaces with low velocity clean water using downward rinsing motion of water spray nozzle. Protect fins from damage from the spray nozzle.
13. Replace top cover and rear corner posts.

FASTENER TORQUE VALUES

Table 11 – Torque Values

Compressor mounting bolts	734–847 N–cm	(120–168 in–lbs)
Condenser fan motor mounting bolts	226 ±23 N–cm	(20 ±2 in–lbs)
Condenser fan hub setscrew	949 ±136 N–cm	(84 ±2 in–lbs)
High-flow service port	1085 ±23 N–cm	(96 ±10 in–lbs)
Schrader-type service check valve	23–34 N–cm	(2–3 in–lbs)
Compressor oil sightglass thread	3730 ±340 N–cm	(330 ±31 in–lbs)

TROUBLESHOOTING

PROBLEM	SOLUTION
COMPRESSOR DOES NOT RUN	
Contactor Open	
1. Power off.	1. Restore power.
2. Fuses blown in field power circuit.	2. After finding cause and correcting, replace with correct size fuse.
3. No control power.	3. Check control transformer primary connections and circuit breaker.
4. Thermostat circuit open.	4. Check thermostat setting.
5. Safety device lockout circuit active.	5. Reset lockout circuit.
6. Low-pressure switch open.	6. Check for refrigerant undercharge, obstruction of indoor airflow. Make sure liquid line solenoid valve(s) is open.
7. High-pressure switch open.	7. Check for refrigerant overcharge, obstruction of outdoor airflow, air in system. Be sure outdoor fans are operating correctly.
8. Compressor overtemperature switch open.	8. Check for open condition. Allow for reset. Replace if defective.
9. Loose electrical connections.	9. Tighten all connections.
10. Compressor stuck.	10. See compressor service literature.
Contactor Closed	
1. Compressor leads loose.	1. Check connections.
2. Motor windings open.	2. See compressor service literature.
3. Single phasing.	3. Check for blown fuse. Check for loose connection at compressor terminal.
COMPRESSOR STOPS ON HIGH-PRESSURE SWITCH	
Outdoor Fan On	
1. High-pressure switch faulty.	1. Replace switch.
2. Reversed fan rotation.	2. Confirm rotation, correct if necessary.
3. Airflow restricted.	3. Remove obstruction.
4. Air recirculating.	4. Clear airflow area.
5. Noncondensables in system.	5. Recover refrigerant and recharge as required.
6. Refrigerant overcharge.	6. Recover refrigerant as required.
7. Line voltage incorrect.	7. Consult power company.
8. Refrigerant system restrictions.	8. Check or replace filter drier, expansion valve, etc.
Outdoor Fan Off	
1. Fan slips on shaft.	1. Tighten fan hub setscrews.
2. Motor not running.	2. Check power and capacitor.
3. Motor bearings stuck.	3. Replace bearings.
4. Motor overload open.	4. Check overload rating. Check for fan blade obstruction.
5. Motor burned out.	5. Replace motor.
COMPRESSOR CYCLES ON LOW-PRESSURE SWITCH	
Indoor-Air Fan Running	
1. Liquid line solenoid valve(s) fails to open.	1. Check liquid line solenoid valve(s) for proper operation. Replace if necessary.
2. Filter drier plugged.	2. Replace filter drier.
3. Expansion valve power head defective.	3. Replace power head.
4. Low refrigerant charge.	4. Add charge. Check low-pressure switch setting.
Airflow Restricted	
1. Coil iced up.	1. Check refrigerant charge.
2. Coil dirty.	2. Clean coil fins.
3. Air filters dirty.	3. Clean or replace filters.
4. Dampers closed.	4. Check damper operation and position.
Indoor-Air Fan Stopped	
1. Electrical connections loose.	1. Tighten all connections.
2. Fan relay defective.	2. Replace relay.
3. Motor overload open.	3. Power supply.
4. Motor defective.	4. Replace motor.
5. Fan belt broken or slipping.	5. Replace or tighten belt.

TROUBLESHOOTING (cont)

PROBLEM	SOLUTION
COMPRESSOR RUNNING BUT COOLING INSUFFICIENT	
Suction Pressure Low	
1. Refrigerant charge low.	1. Add refrigerant.
2. Head pressure low.	2. Check refrigerant charge. Check outdoor-air fan thermostat settings.
3. Air filters dirty.	3. Clean or replace filters.
4. Expansion valve power head defective.	4. Replace power head.
5. Indoor coil partially iced.	5. Check low-pressure setting.
6. Indoor airflow restricted.	6. Remove obstruction.
Suction Pressure High	
1. Unloaders not functioning	1. Check unloader adjustments. Check unloader setting.
2. Heat load excessive.	2. Check for open doors or windows in vicinity of fan coil.
UNIT OPERATES TOO LONG OR CONTINUOUSLY	
1. Low refrigerant charge.	1. Add refrigerant.
2. Control contacts fused.	2. Replace control.
3. Air in system.	3. Purge and evacuate system.
4. Partially plugged expansion valve or filter drier.	4. Clean or replace.
SYSTEM IS NOISY	
1. Piping vibration.	1. Support piping as required.
2. Compressor noisy.	2. Replace compressor if bearings are worn.
COMPRESSOR LOSES OIL	
1. Leak in system.	1. Repair leak.
2. Crankcase heaters not energized during shutdown.	2. Check wiring and relays. Check heater and replace if defective.
3. Improper interconnecting piping design.	3. Check piping for oil return. Replace if necessary.
FROSTED SUCTION LINE	
Expansion valve admitting excess refrigerant.	Adjust expansion valve.
HOT LIQUID LINE	
1. Shortage of refrigerant due to leak.	1. Repair leak and recharge.
2. Expansion valve opens too wide.	2. Adjust expansion valve.
FROSTED LIQUID LINE	
1. Restricted filter drier.	1. Remove restriction or replace.
2. Liquid line solenoid valve partially closed.	2. Replace valve.

APPENDIX A

AIR CONDITIONER & HEAT PUMP WITH PURON® — QUICK REFERENCE GUIDE

- Puron® (R-410A) refrigerant operates at 50 percent to 70 percent higher pressures than R-22. Be sure that servicing equipment and replacement components are designed to operate with Puron®.
- Puron® refrigerant cylinders are rose colored.
- Recovery cylinder service pressure rating must be 2758 kPa (400 psig), DOT 4BA400 or DOT BW400.
- Puron® systems should be charged with liquid refrigerant. Use a commercial type metering device in the manifold hose when charging into suction line with compressor operating.
- Manifold sets should be 4826 kPa (700 psig) high side and 180 psig low side with 3290 kPa (550 psig) low-side retard.
- Use hoses with 4826 kPa (700 psig) service pressure rating.
- Leak detectors should be designed to detect HFC refrigerant.
- Puron®, as with other HFCs, is only compatible with POE oils.
- Vacuum pumps will not remove moisture from oil.
- Use only factory specified liquid-line filter driers with rated working pressures greater than 4137kPa (600 psig).
- Do not install a suction-line filter drier in liquid-line.
- POE oils absorb moisture rapidly. Do not expose oil to atmosphere.
- POE oils may cause damage to certain plastics and roofing materials.
- Wrap all filter driers and service valves with wet cloth when brazing.
- A factory approved, liquid-line filter drier is required on every unit.
- Do not use an R-22 TXV.
- If indoor unit is equipped with a TXV, it must be changed to a Puron® TXV.
- Never open system to atmosphere while it is under a vacuum.
- When system must be opened for service, recover refrigerant, break vacuum with dry nitrogen before opening system.
- Always replace filter drier after opening system for service.
- Do not vent Puron® into the atmosphere.
- Do not use capillary tube coils.
- Observe all **warnings**, **cautions**, and **bold** text.
- All Puron® heat pumps must have indoor TXV.
- Do not leave Puron® suction line driers in place for more than 72 hours.

APPENDIX B

WIRING DIAGRAM LIST

Unit	Electrical Characteristics	Diagram Number
38AD*16	400–3–50	38AU500824
38AD*25	400–3–50	38AU500825

APPENDIX C

MOTORMASTER SENSOR LOCATIONS

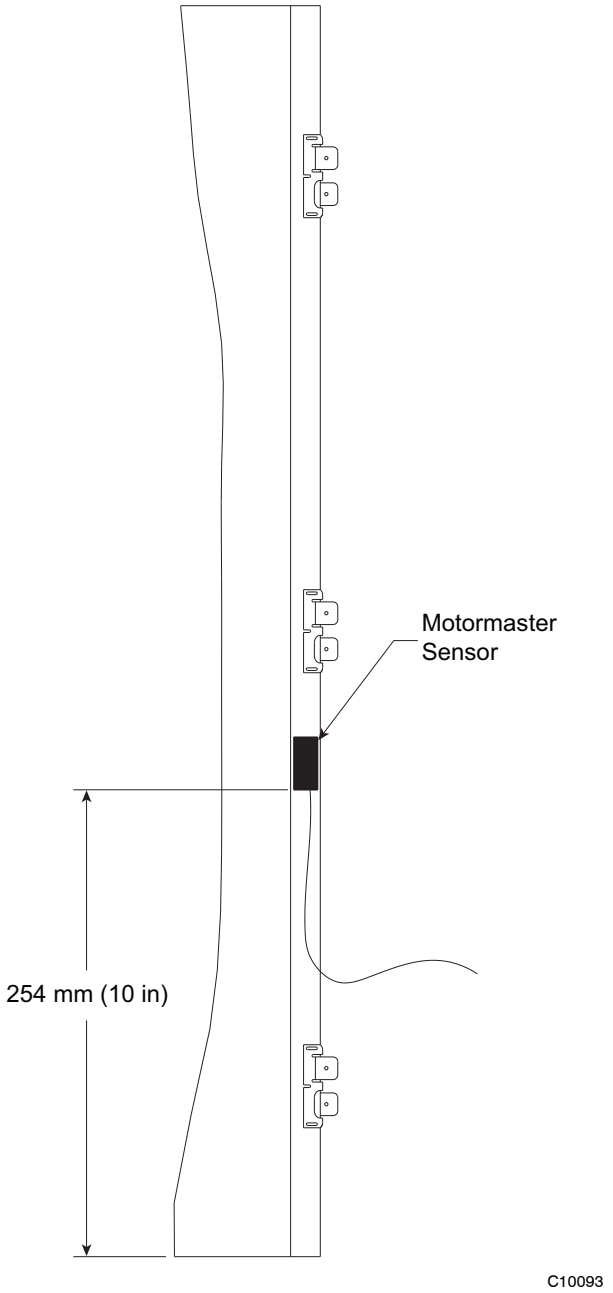

Fig. 29 - Motormaster Sensor Location: 38AUD*16

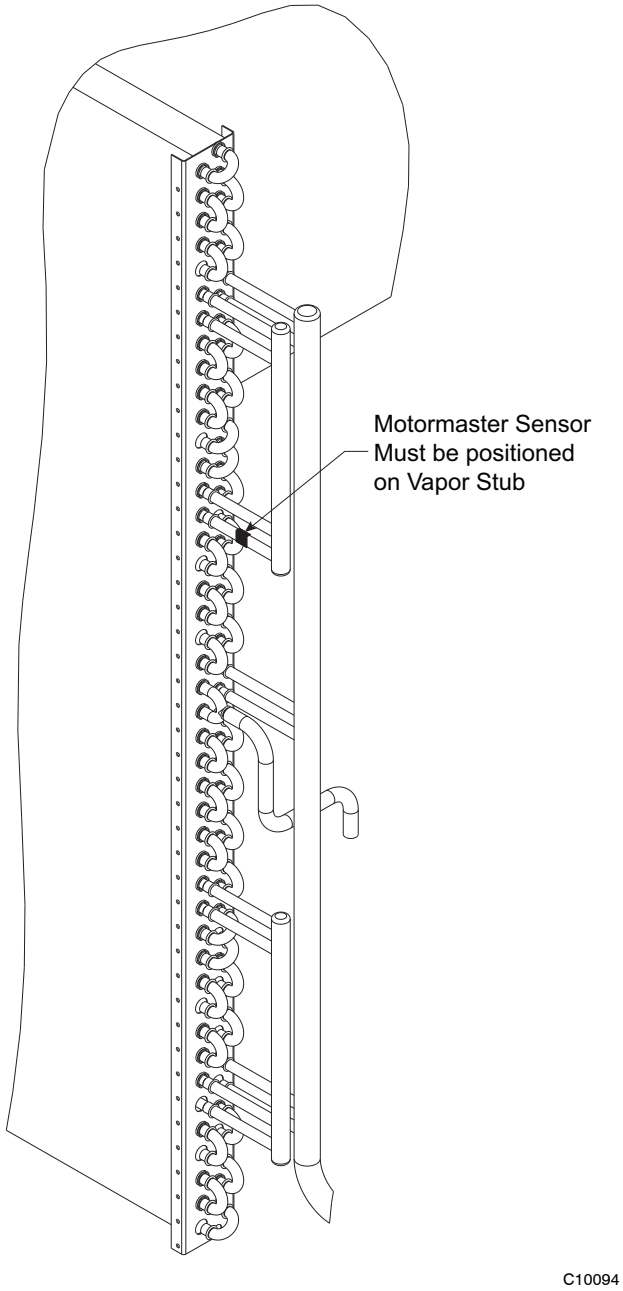

Fig. 30 - Motormaster Sensor Location: 38AUD*25

38AUD

Copyright 2010 Carrier Corp. • 7310 W. Morris St. • Indianapolis, IN 46231 Printed in U.S.A. Edition Date: 01/10 **Catalog No: 38AU–C02SI**

Manufacturer reserves the right to change, at any time, specifications and designs without notice and without obligations.

Replaces: New

START-UP CHECKLIST

I. PRELIMINARY INFORMATION

OUTDOOR: MODEL NO. _____ SERIAL NO. _____

INDOOR: AIRHANDLER MANUFACTURER _____

MODEL NO. _____ SERIAL NO. _____

ADDITIONAL ACCESSORIES _____

II. PRE-START-UP

OUTDOOR UNIT

IS THERE ANY SHIPPING DAMAGE? (Y/N) _____

IF SO, WHERE: _____

_____

WILL THIS DAMAGE PREVENT UNIT START-UP? (Y/N) _____

CHECK POWER SUPPLY. DOES IT AGREE WITH UNIT? (Y/N) _____

HAS THE GROUND WIRE BEEN CONNECTED? (Y/N) _____

HAS THE CIRCUIT PROTECTION BEEN SIZED AND INSTALLED PROPERLY? (Y/N) _____

ARE THE POWER WIRES TO THE UNIT SIZED AND INSTALLED PROPERLY? (Y/N) _____

CONTROLS

ARE THERMOSTAT AND INDOOR FAN CONTROL WIRING CONNECTIONS MADE AND CHECKED? (Y/N) _____

ARE ALL WIRING TERMINALS (including main power supply) TIGHT? (Y/N) _____

HAS CRANKCASE HEATER BEEN ENERGIZED FOR 24 HOURS? (Y/N) _____

INDOOR UNIT

HAS WATER BEEN PLACED IN DRAIN PAN TO CONFIRM PROPER DRAINAGE? (Y/N) _____

ARE PROPER AIR FILTERS IN PLACE? (Y/N) _____

HAVE FAN AND MOTOR PULLEYS BEEN CHECKED FOR PROPER ALIGNMENT? (Y/N) _____

DO THE FAN BELTS HAVE PROPER TENSION? (Y/N) _____

HAS CORRECT FAN ROTATION BEEN CONFIRMED? (Y/N) _____

PIPING

ARE LIQUID LINE SOLENOID VALVES LOCATED AT THE INDOOR COILS AS REQUIRED? (Y/N) _____

HAVE LEAK CHECKS BEEN MADE AT COMPRESSOR, OUTDOOR AND INDOOR COILS, TXVs (Thermostatic Expansion Valves), SOLENOID VALVES, FILTER DRIERS, AND FUSIBLE PLUGS WITH A LEAK DETECTOR? (Y/N) _____

LOCATE, REPAIR, AND REPORT ANY LEAKS. _____

HAVE LIQUID LINE SERVICE VALVES BEEN OPENED? (Y/N) _____

HAVE SUCTION SERVICE VALVES BEEN OPENED? (Y/N) _____

CHECK VOLTAGE IMBALANCE

LINE-TO-LINE VOLTS: AB _____ V AC _____ V BC _____ V

(AB + AC + BC)/3 = AVERAGE VOLTAGE = _____ V

MAXIMUM DEVIATION FROM AVERAGE VOLTAGE = _____ V

VOLTAGE IMBALANCE = 100 X (MAX DEVIATION)/(AVERAGE VOLTAGE) = _____

IF OVER 2% VOLTAGE IMBALANCE, DO NOT ATTEMPT TO START SYSTEM!
CALL LOCAL POWER COMPANY FOR ASSISTANCE.

CHECK INDOOR UNIT FAN SPEED AND RECORD. _____

CHECK OUTDOOR UNIT FAN SPEED AND RECORD. _____

AFTER AT LEAST 10 MINUTES RUNNING TIME, RECORD THE FOLLOWING MEASUREMENTS:

	CIRCUIT 1	CIRCUIT 2
SUCTION PRESSURE	_____	_____
SUCTION LINE TEMP	_____	_____
LIQUID PRESSURE	_____	_____
LIQUID LINE TEMP	_____	_____

ENTERING OUTDOOR UNIT AIR TEMP _____

LEAVING OUTDOOR UNIT AIR TEMP _____

INDOOR UNIT ENTERING-AIR DB (dry bulb) TEMP _____

INDOOR UNIT ENTERING-AIR WB (wet bulb) TEMP _____

INDOOR UNIT LEAVING-AIR DB TEMP _____

INDOOR UNIT LEAVING-AIR WB TEMP _____

COMPRESSOR AMPS (L1/L2/L3)

CIRCUIT 1 _____ / _____ / _____

CIRCUIT 2 _____ / _____ / _____

NOTES:

_____

_____

_____

_____

_____

_____

_____

_____

_____

_____

_____

_____

Copyright 2010 Carrier Corp. • 7310 W. Morris St. • Indianapolis, IN 46231 Printed in U.S.A. Edition Date: 01/10 **Catalog No: 38AU–C02SI**

Manufacturer reserves the right to change, at any time, specifications and designs without notice and without obligations. Replaces: New