40KMC / 38HDF
40KMQ / 38QRF
In−Ceiling Cassette Duct−Free Split System
Sizes 018 to 036

Carrier®
Turn to the Experts.℠

Installation Instructions

40KMC, KMQ Unit

38HDF/QRF Unit

NOTE: Read the entire instruction manual before starting the installation.

⚠ WARNING

UNIT OPERATION AND SAFETY HAZARD

Failure to follow this warning could result in personal injury or equipment damage.

Puron refrigerant systems operate at higher pressures than standard R-22 systems. To avoid damage to the unit or possible personal injury, do not use R-22 service equipment or components on Puron refrigerant equipment.

SAFETY CONSIDERATIONS

Improper installation, adjustment, alteration, service, maintenance, or use can cause explosion, fire, electrical shock, or other conditions which may cause death, personal injury, or property damage. Consult a qualified installer, service agency, or your distributor or branch for information or assistance. The qualified installer or agency must use factory-authorized kits or accessories when modifying this product. Refer to the individual instructions packaged with the kits or accessories when installing.

Follow all safety codes. Wear safety glasses, protective clothing, and work gloves. Use quenching cloth for brazing operations. Have fire extinguisher available. Read these instructions thoroughly and follow all warnings or cautions included in literature and attached to the unit. Consult local building codes and current editions of the National Electrical Code (NEC) NFPA 70. In Canada, refer to current editions of the Canadian electrical code CSA 22.1.

Recognize safety information. This is the safety-alert symbol ⚠ When you see this symbol on the unit and in instructions or manuals, be alert to the potential for personal injury. Understand these signal words; DANGER, WARNING, and CAUTION. These words are used with the safety-alert symbol. DANGER identifies the most serious hazards which **will** result in severe personal injury or death. WARNING signifies hazards which **could** result in personal injury or death. CAUTION is used to identify unsafe practices which **would** result in minor personal injury or product and property damage. NOTE is used to highlight suggestions which **will** result in enhanced installation, reliability, or operation.

⚠ WARNING

ELECTRICAL SHOCK HAZARD

Failure to follow this warning could result in personal injury or death.

Before installing, modifying, or servicing system, main electrical disconnect switch must be in the OFF position. There may be more than 1 disconnect switch. Lock out and tag switch with a suitable warning label.

⚠ CAUTION

PERSONAL INJURY AND EQUIPMENT DAMAGE HAZARD

Failure to follow this caution may result in personal injury and / or equipment damage.

DO NOT operate the unit without a filter or with grille removed.

DIMENSIONS - INDOOR

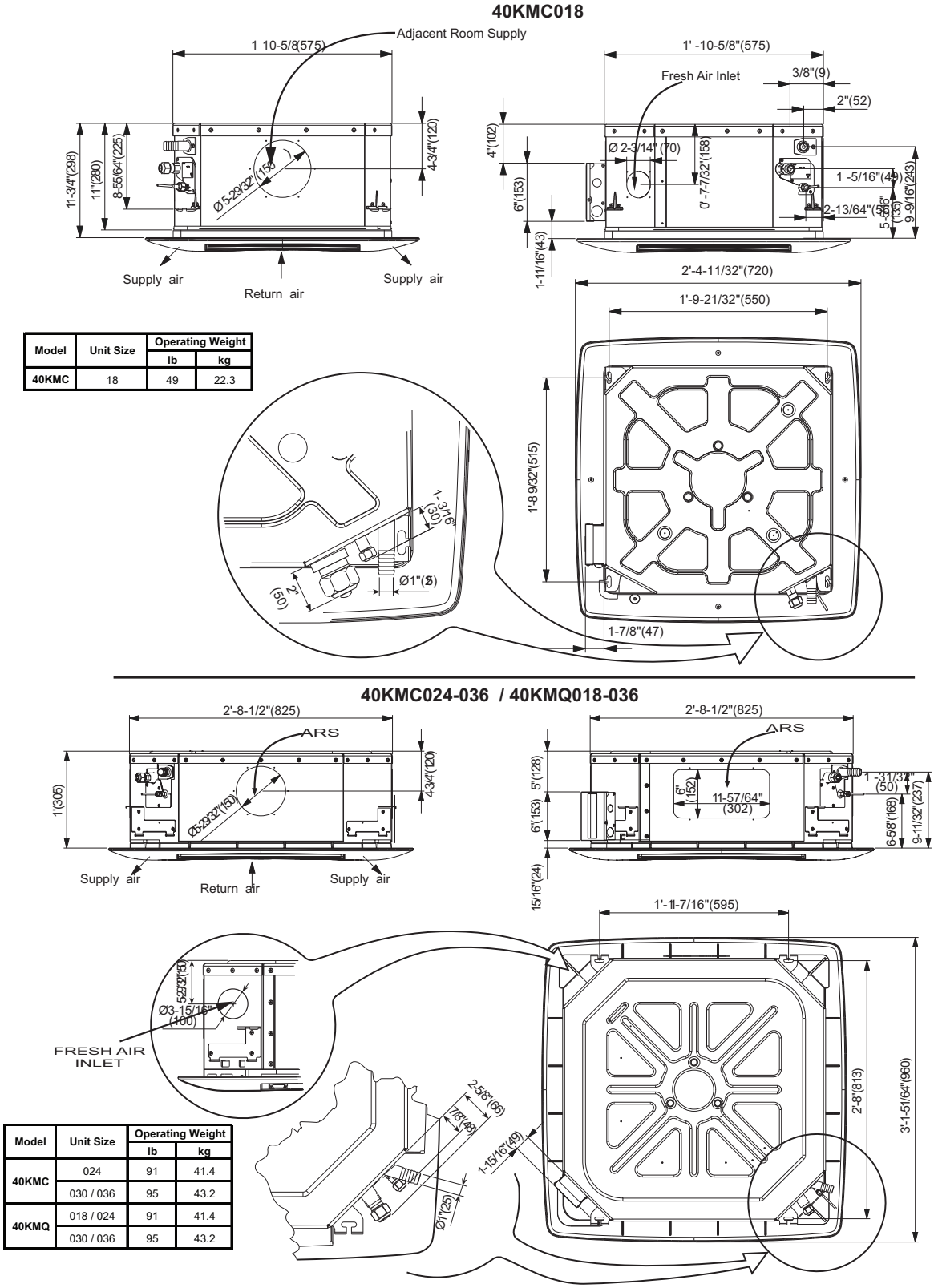

Model	Unit Size	Operating Weight	
		lb	kg
40KMC	18	49	22.3

Model	Unit Size	Operating Weight	
		lb	kg
40KMC	024	91	41.4
	030 / 036	95	43.2
40KMQ	018 / 024	91	41.4
	030 / 036	95	43.2

NOTE: Dimensions in ( ) are in mm.

A08447

Fig. 1 - 40KMC,KMQ Indoor Unit Dimensions

DIMENSIONS - OUTDOOR

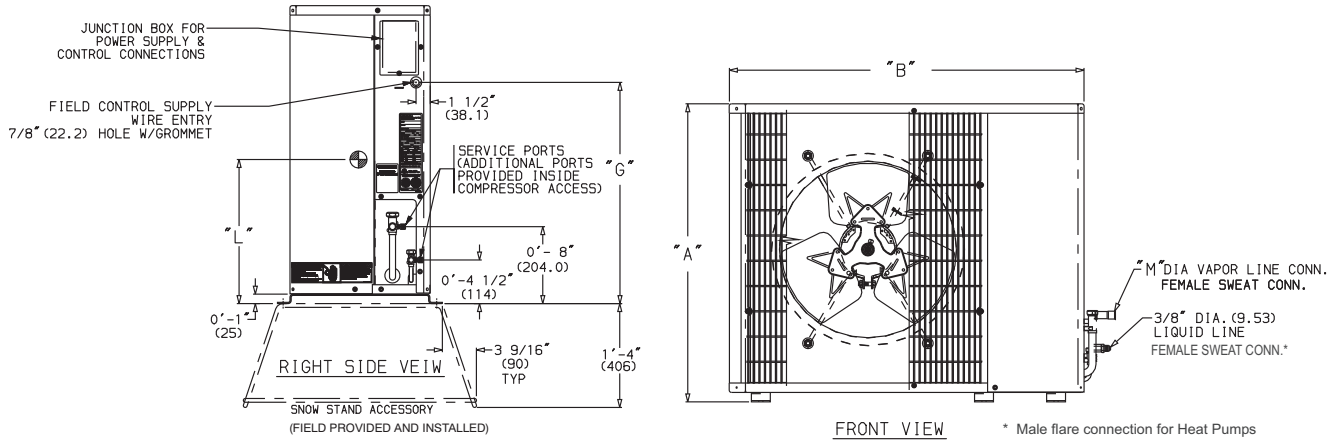

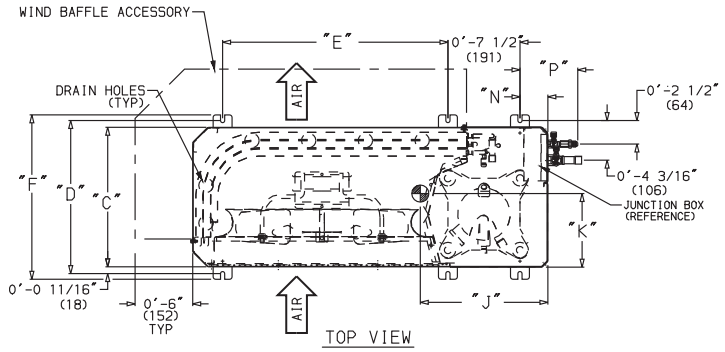

UNIT SIZE		M		OPERATING WT	
		in.	mm	lb	kg
38HDF	018	5/8	15.88	166	75.3
	024	5/8	15.88	176	79.8
	030	3/4	19.05	187	84.8
	036	3/4	19.05	250	113.4
38QRF	018	5/8	15.88	166	75.3
	024	5/8	15.88	176	79.8
	030	3/4	19.05	187	84.8
	036	3/4	19.05	232	105.2

UNIT MODELS		CHASSIS SIZE (Reference)	A	B	C	D	E	F	G	H	J	K	L	N	P
38HDF Unit Size	38QRF Unit Size														
018	018	0	2'-11 1/8" (638.2)	3'-0 15/16" (938.2)	1'-2 9/16" (369.9)	1'-4" (406.4)	1'-11 7/16" (595.3)	1'-5 3/16" (436.6)	1'-5 1/8" (435)	1'-10" (559.1)	1'-1" (330.2)	0'-6 5/8" (168.3)	0'-11 1/4" (285.8)	0'-2 15/16" (75)	0'-6" (152.4)
024,030	024	0.6	2'-7 1/8" (790.6)	3'-0 15/16" (938.2)	1'-2 9/16" (369.9)	1'-4" (406.4)	1'-11 7/16" (595.3)	1'-5 3/16" (436.6)	1'-11 1/8" (587.4)	2'-4" (711.5)	1'-2" (355.6)	0'-6 3/4" (171.5)	0'-11 5/8" (295.3)	0'-2 15/16" (75)	0'-6" (152.4)
036	030,036	1.0	3'-1 3/16" (944.6)	3'-8 9/16" (1131.9)	1'-5 1/16" (433.4)	1'-6 7/16" (468.3)	2'-6 1/2" (774.7)	1'-7 5/8" (498.5)	2'-5 3/16" (741)	2'-10 1/16" (865.5)	1'-1 11/16" (347.7)	0'-8 1/8" (206.4)	1'-3 7/8" (403.2)	0'-3 7/16" (88)	0'-6 1/2" (165.4)

NOTE: Dimensions shown in feet-inches. Dimensions in ( ) are millimeters.

A08434

Fig. 2 - 38HDF, QRF Unit Dimensions

CLEARANCES - OUTDOOR

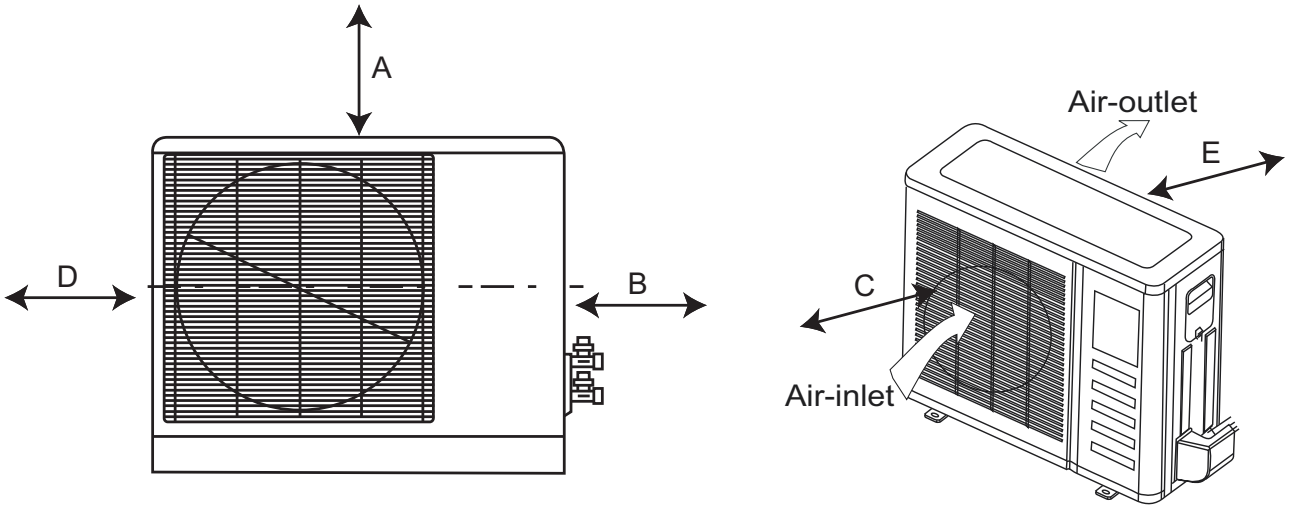

UNIT	Coil Facing Wall – in. (mm)	Fan Facing Wall – in. (mm)
A	24 (610)	24 (610)
B	36 (914)	36 (914)
C	36 (914)	8 (203)
D	6 (152)	8 (203)
E	6 (152)	36 (914)

A08436

Fig. 3 - Outdoor Unit Clearance

Parts List

Indoor Unit

The following items are included with the indoor unit:

Table 1 – Installation Materials

Description	Qty	Usage
Baffle (size 18)	1	Required for fresh air intake
Template	1	Mark hangers, piping and wiring locations

NOTE: The grille and the User Interface are not included with unit. For User Interface, a wireless remote, wired remote, or a Zone Manager can be ordered.

Outdoor Unit

The following items are included with the outdoor unit:

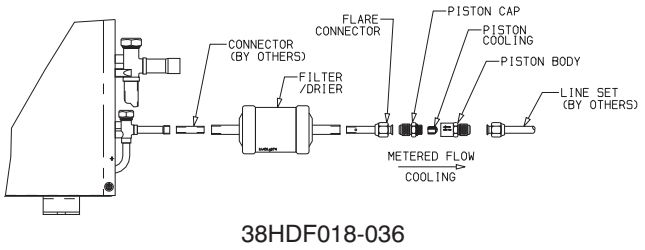

Fig. 4 - 38HDF018-036

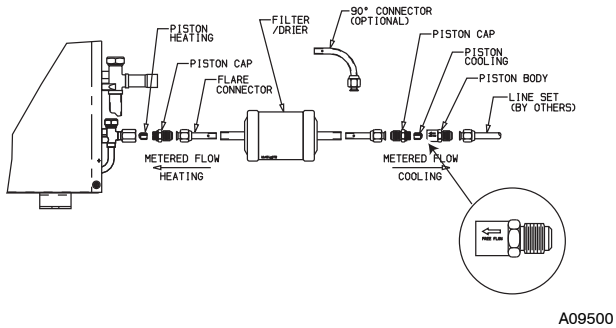

Fig. 5 - 38QRF018-036

Model	Filter Drier	Piston Cap	Pistons*	Flare Connector
38HDF	✓	✓	✓	✓
38QRF	✓	✓ (qty 2)	✓	✓ (qty 3)

* Multiple pistons. Quantity varies with size.

These instructions cover the installation and start-up of the systems listed in Table 2.

Table 2 – Matched Systems

SYSTEM TYPE	SYSTEM SIZE	OUTDOOR UNIT	INDOOR UNIT MODEL NUMBER
Cooling Only	018	38HDF018–3	40KMC018–3
	024	38HDF024–3	40KMC024–3
	030	38HDF030–3	40KMC03036–3
	036	38HDF036–3/5/6	40KMC03036–3
Heat Pump	018	38QRF018–3	40KMQ01824–3
	024	38QRF024–3	40KMQ01824–3
	030	38QRF030–3	40KMQ03036–3
	036	38QRF035–3/5/6	40KMQ03036–3
Cooling with Electric Heat	018	38HDF018–3	40KMQ01824–3
	024	38HDF024–3	40KMQ01824–3
	030	38HDF030–3	40KMQ03036–3
	036	38HDF036–3/5/6	40KMQ03036–3

SYSTEM REQUIREMENTS

Clearances

Allow sufficient space around the indoor and outdoor unit for proper airflow circulation and servicing. Refer to Fig. 1 and Fig. 3 for minimum required clearances.

Piping: Piping and insulation is field supplied.

Piping Lengths

The minimum length between the indoor and outdoor units is 10 ft (3 m). Refer to table 3 for the maximum lengths allowed.

Table 3 – Maximum Refrigerant Line Lengths

Unit Size	Max Line Length* ft(m)	Max Elevation (ID over OD) ft(m)	Max Elevation (OD over ID) ft (m)
18K	200 (61)	65 (19.8)	200 (61)
24K	200 (61)	65 (19.8)	200 (61)
30K	200 (61)	65 (19.8)	200 (61)
36K	200 (61)	65 (19.8)	200 (61)

Note: For lengths greater than 25 ft (7.6 m), refer to the *Duct Free Long Line Guide*.

Pipe Sizes

Refer to table 4 for pipe sizes.

Table 4 – Pipe Sizes

Pipe Sizes (in)		
Unit Size	Mix Phase – in	Vapor – in
18K	3/8	5/8
24K	3/8	5/8
30K	3/8	3/4
36K	3/8	3/4

Note: Both lines need to be insulated using at least 1/2 inch closed foam insulation.

Condensate Drain Pipe Sizes

Refer to table 5 for the required sizes.

Table 5 – Drain Pipe Sizes

Unit Size	Inside Diameter – in
18K	1
24K	1
30K	1
36K	1

Refrigerant Charge

The 38HDF and 38QRF units can be matched with multiple outdoor units and thus additional charge might be required when matched with the 40KMC or 40KMQ units.

Table 6 – Additional Charge

Additional Charge lb (kg)		
Unit Size	**38HDF**	**38QRF**
018	0	0
024	1.2 (0.55)	0
030	3.0 (1.40)	1.8 (0.82)
036	0.8 (0.36)	0

Note:The above additional charge is required amount for line lengths up to 25 ft (7.6 m). For line lengths exceeding 25 ft (7.6 m), additional charge will be required. Refer to the *Duct Free Splits Long Line Guide*.

Metering Device

The metering device(s) for these systems is a type B Accurator installed with the outdoor unit. One Accurator is required for the cooling only system and two are required for the heat pump systems. The Accurators are supplied with the outdoor unit. However, since the same outdoor unit can be matched with multiple indoor units, the correct Accurator must be selected. Refer to Table 7 for the correct Accurator size.

Table 7 – Accurator Sizes

System Type	Size	Cooling Accurator	Heating Accurator
Cooling Only	018	49	–
	024	57	–
	030	61	–
	036	74	–
Heat Pumps	018	51	46
	024	55	53
	030	63	55
	036	70	63

Power and Connecting Cables - Field Supplied

Power:

- The indoor and outdoor units require a dedicated power supply.
- Consult local building codes, NEC (National Electric Code) or CEC (Canadian Electric Code) for any special requirements.
- Use Table 8 for the electrical requirements for the outdoor units and Table 9 for the indoor units to correctly size the cables and disconnect switches.

Table 8 – 38HDF / QRF Electrical Requirements

Unit Size	Voltage	38HDF	38QRF
		Min Ckt Amps/ Fuse HACR Bkr Amps	Min Ckt Amps/ Fuse HACR Bkr Amps
018	208/230–1–60	12.1/20	12.1/20
024	208/230–1–60	16.8/25	16.8/25
030	208/230–1–60	18.4/30	18.4/30
035/36	208/230–1–60	23.8/40	23.3/35
035/36	208/230–3–60	18.0/30	14.5/20
035/36	460–3–60	8.3/15	8.7/15

Table 9 – 40KMC / KMQ Electrical Requirements

Unit Size	Voltage	40KMC	40KMQ
		Min Ckt Amps/ Fuse HACR Bkr Amps	Min Ckt Amps/ Fuse HACR Bkr Amps
018	208/230–1–60	0.8/15	16.3/20
024	208/230–1–60	0.7/15	16.3/20
030	208/230–1–60	1.3/15	16.9/20
036	208/230–1–60	1.3/15	16.9/20

Control Wiring

Thermostat wires should be used for control wiring between the indoor and outdoor units. A two conductor cable is required for the cooling only units and a seven conductor cable is required on heat pumps. 18 AWG is recommended for any length up to 50 ft (15.2 m). 16 AWG is recommended for lengths between 50 and 200 ft (15.2 and 61.0 m).

User Interface

For 38HDF and 38QRF units matched with 40KMC and 40KMQ units, the following accessories are available

- Wall mounted control. Up to 6 units can be daisy chained and controlled by one wired control.
- Zone manager capable of controlling up to 32 units divided up to 8 different zones.
- Wireless remote control.

NOTE: **Units are factory ready for wall mounted wired controls. See User Interface Installation section in this document.**

Operating Range

Ensure that the system operates within the application guidelines shown in the following tables.

Cooling Operating Range

	Maximum		Minimum	
	DB °F (°C)	WB °F (°C)	DB °F (°C)	WB °F (°C)
Outdoor Unit	125 (51.7)	– –	55 (12.8)	– –
Indoor Unit	90 (32.2)	74 (23.3)	62 (17.0)	56 (13)

Heating Operating Range

	Maximum		Minimum	
	DB °F (°C)	WB °F (°C)	DB °F (°C)	WB °F (°C)
Outdoor Unit	75 (23.9)	67 (19.4)	17 (–8.3)	– –
Indoor Unit	81 (27.2)	– –	62 (17.0)	– –

Accessories

An extensive list of field installed accessories is available for both indoor and outdoor units. Identify what accessories, if any, are required for the application at hand and consult the separate installation instructions for the accessories. Some of the accessories, especially on the indoor units, can be installed much easier if planned ahead.

INSTALLATION

Complete Pre-installation Checks

1. **Unpack Unit -** Store the indoor and outdoor units in the original packaging until it is moved to the final site for installation. When unpacking indoor unit, be careful not to lift unit by condensate drain discharge pipe or by refrigerant connections.
2. **Inspect Shipment -** Upon receipt of shipment, check the indoor and outdoor units for damage. If there is any damage, forward claim papers directly to the transportation company. Manufacturer is not responsible for damage incurred in transit.
3. **Inspect Parts Supplied With Units** – Check all items against parts list (see page 4). If any items are missing, notify your distributor or Carrier office.

To prevent loss or damage, leave all parts in original packages until installation.

Consider System Requirements

1. Consult local building codes and NEC for special installation requirements.
2. When deciding the location of the indoor and outdoor units, ensure that the piping run does not exceed the allowed distances listed in Table 3.
3. Make sure the indoor and outdoor units are easily accessible to electrical power.
4. Allow sufficient clearances for airflow, wiring, refrigerant piping, and servicing the unit. See Fig. 2 and Fig. 3.
5. Condensate piping can be directed through the inside wall to an approved drain or straight outside.

INSTALL INDOOR UNIT

Plan the installation carefully before you begin.

1. Select indoor unit location.
   a. A location that can bear the weight of the unit.
   b. Install the unit a centrally as possible in the room.
   c. Choose a location that does not obstruct air circulation.

NOTE: **A maximum of two air outlets can be restricted at one time. See Fig. 6. The Air Supply Outlet Obstruction accessory kit can be used to obstruct air outlets.**

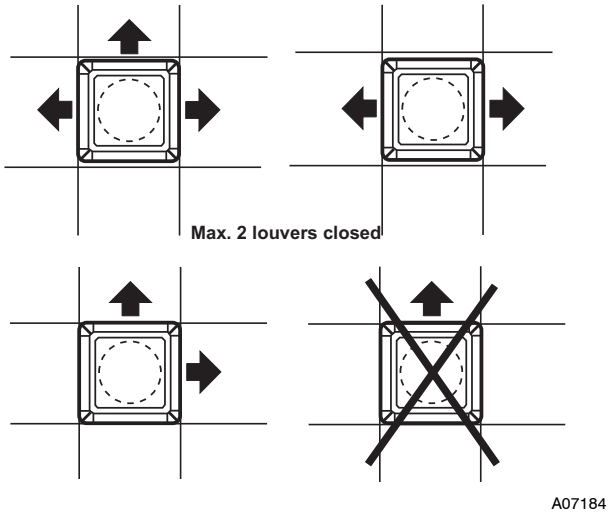

Fig. 6 - Air Outlet Obstruction

   d. Choose a location that is easily accessible for service and maintenance.
   e. Do not install indoor units near a direct source of heat such as direct sunlight or heating appliance.
   f. Do not install units too close to humid conditions.
2. Mounting Indoor Unit

NOTE: **If the mounting location is in a plaster board ceiling, the maximum dimensions of the unit housing cutout must not exceed 2 ft, 2 in. (0.66 mm) square for the 40KMC018 units and 2 ft. 11 in. (0.66 mm) square for the 40KMC024-036 and 40KMQ018-036 units.**

NOTE: **The unit is in two sections: The unit and the grille.**

   a. Use the factory supplied cardboard template as a guide to mark the position of the hangers, refrigerant lines and condensate drain pipes, power supply cables and remote control cables. See Fig. 1 for dimensions.
   b. Depending on the type of ceiling, fix the threaded hangers as shown in Fig. 7 and Fig. 8.

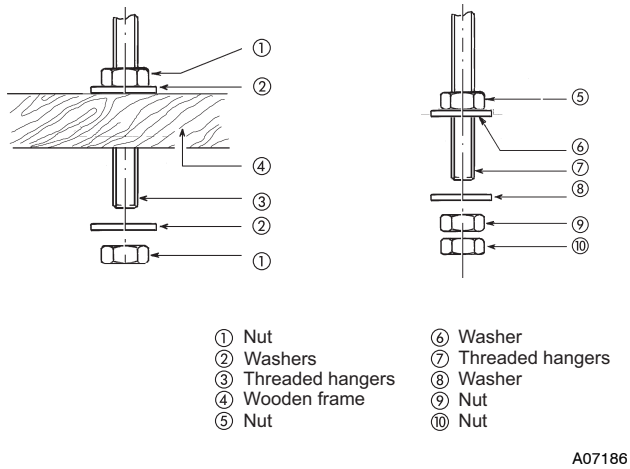

Fig. 7 - Attaching Hangers to Ceiling

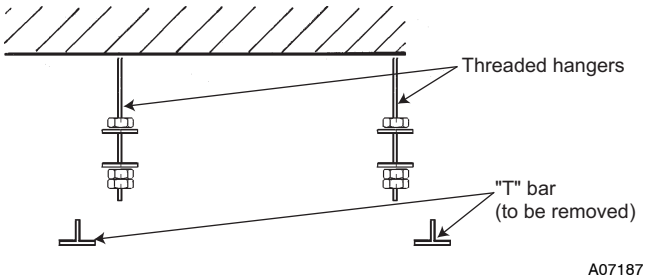

Fig. 8 - Threaded Hangers and "T"Bar

   c. Insert the washers as shown in Fig. 7 and Fig. 8.
   d. Remove the "T"bar in ceiling to facilitate installation. See Fig. 8. If the "T" bar cannot be removed from the ceiling, the unit may have to be tilted as shown in Fig. 9.

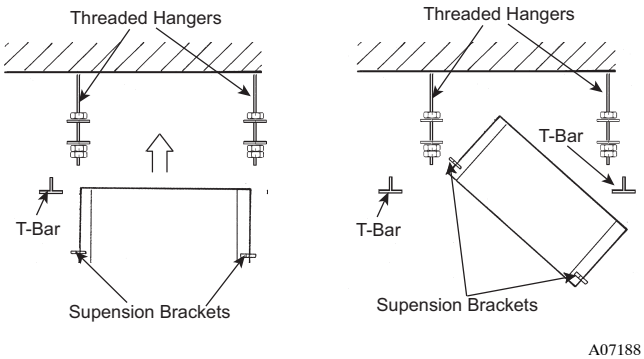

Fig. 9 - Positioning Unit in Ceiling

   e. If Fresh Air Intake or Conditioning an Adjacent Room is required, perform the modification required to the unit at this point. Refer to the Installation Options section for additional details.

f. Use a stacker to lift the unit to the installation location. See Fig. 10.

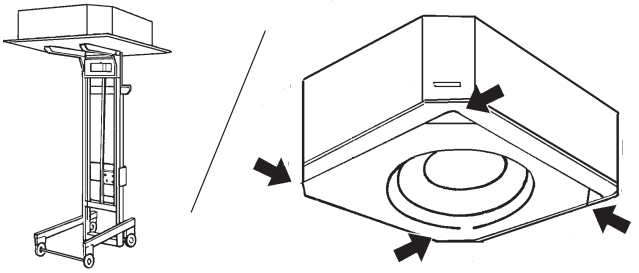

A07185

Fig. 10 - Positioning Unit

g. Carefully lift the unit using the four suspension brackets and insert the four suspension brackets into the threaded hanger as shown in Fig. 11.

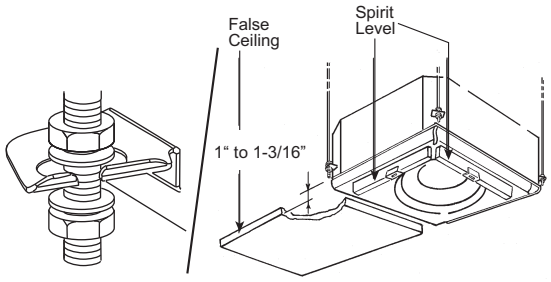

A07189

Fig. 11 - Align and Level Unit

h. Align and level the unit by adjusting the nuts and lock-nuts on the threaded hangers maintaining a distance of 1 in. to 1-3/16 in. between the sheet metal body and the underside of the false ceiling. See Fig. 11.

3. Drill the hole for the piping (refrigerant and condensate) and control wiring in the external wall.

a. Drill a 2-3/4 in. (70 mm) hole in the wall with a 3/16 in. to 3/8 in. (4.8 - 9.5 mm) slope toward the outside. Refer to Fig. 12.

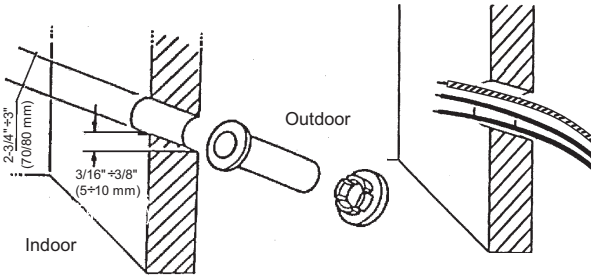

A07190

Fig. 12 - Drilling for Connections

4. Drill hole for Fresh Air Intake, if required. Refer to Installation Options section for additional information.

NOTE: **In rooms with high humidity, brackets should be insulated using self-adhesive insulation.**

INSTALL OUTDOOR UNIT

The outdoor units can be installed on the ground, on the roof, or mounted on a wall.

NOTE: **Install the unit so that the coil does not face into prevailing winds. If this is not possible and constant wind winds above 25 mph are expected, use accessory wind baffle. See installation instructions provided with accessory kit. Wind baffles should also be used on all units with accessory low ambient temperature control.**

Mounting on Ground

1. Mount unit on a solid level concrete pad.
2. If a heat pump is being installed, use a field- provided snow stand or ice rack where prolonged subfreezing temperatures or heavy snow occurs.
3. Position unit so water or ice from roof does not fall directly onto unit.
4. On cooling only units, an accessory stacking kit can be used when units are to be stacked. See installation instructions provided with the accessory kit.

Mounting on Roof

⚠ CAUTION

PERSONAL INJURY AND/OR EQUIPMENT DAMAGE HAZARD

Failure to follow this caution may result in personal injury and / or equipment damage.
Be sure unit panels are securely in place prior to rigging.

1. Rig the unit. Keep the unit upright and lift using a sling. Use cardboard or padding under the sling, and spreader bars to prevent sling damage to the unit. See Fig 13. See Fig. 2 for center of gravity reference
2. Mount unit on a solid concrete pad or platform.
3. Isolate unit and piping from structure
4. If a heat pump is being installed, use a field- provided snow stand or ice rack where prolonged subfreezing temperatures or heavy snow occurs.
5. On cooling only units, an accessory stacking kit can be used when units are to be stacked. See installation instructions provided with accessory kit.

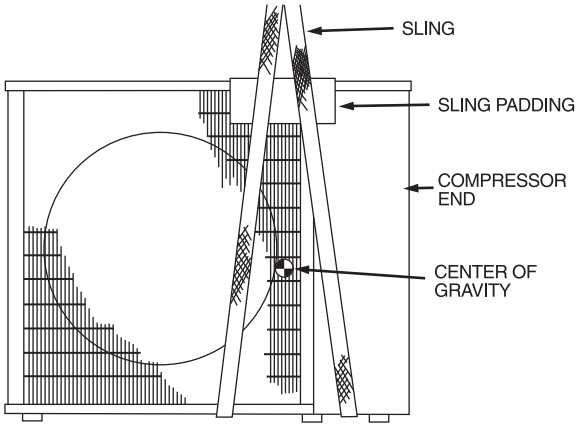

A07396

Fig. 13 - Lifting Unit with Sling

Mounting Unit on Wall

The units can also be mounted on the wall using the accessory mounting kit.

Complete Outdoor Refrigerant Piping Connections

Follow the following general guidelines:

1. Use refrigerant grade field – supplied tubing. Refer to Table 4 for the correct line sizes.
2. Do not use less than 10 ft (93.05 m) of interconnecting tubing.

⚠ CAUTION

UNIT DAMAGE HAZARD

Failure to follow this caution may result in equipment damage or improper operation.

If any section of pipe is buried, there must be a 6 in. (152.4 mm) vertical rise to the valve connections on the outdoor unit. If more than the recommended length is buried, refrigerant may migrate to cooler, buried section during extended periods of system shutdown. This causes refrigerant slugging and could possibly damage the compressor at start-up.

When more than 80 ft (24.4 m) of interconnecting tubing is used, consult the Duct-Free Split System Long Line Application Guide for required accessories.

3. Insulate both lines. A minimum of 1/2 inch foam pipe insulation is recommended.
4. Run the refrigerant tubes as directly as possible and avoid unnecessary turns and bends.
5. Suspend refrigerant tubes to avoid damage to insulation or tubes so they do not transmit vibration to the structure.
6. When passing refrigerant tubes through the wall, seal the opening so rain and insects do not enter the structure. Leave some slack in refrigerant tubes between structure and outdoor unit to absorb vibration.

NOTE: **A fusible plug is located in unit suction line; do not cap this plug. If local codes require additional safety devices, install as directed.**

Connection at Outdoor Unit

⚠ CAUTION

UNIT DAMAGE HAZARD

Failure to follow this caution may result in equipment damage or improper operation.

To prevent damage to unit or service valves observe the following:

- A brazing shield **MUST** be used.
- Wrap service valves with wet cloth or use a heat sink material.

38HDF Units:

1. Assemble the connector tube to the factory supplied filter drier by:
   a. Braze the field supplied connector to the inlet of the filter drier (see Fig. 14)
   b. Braze the factory supplied flare connector to the outlet end of the filter drier (see Fig.14)

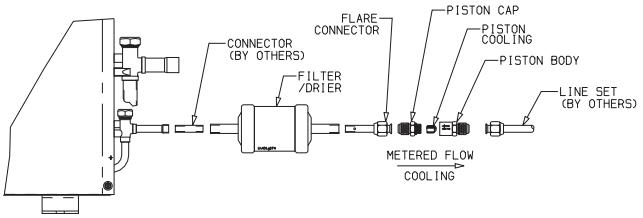

A09499

Fig. 14 - 38HDF018-036 Connector Tube Assembly

2. Assemble the Accurator body (see Fig. 15) using the correct factory supplied piston (refer to Table 7) .

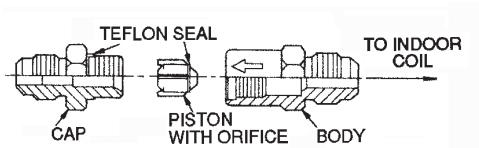

NOTE: Arrow on AccuRater body points in free flow direction, away from the indoor coil.

A09501

Fig. 15 - AccuRater (bypass type) Metering Device Components

3. Attach the complete Accurator assembly to the flare connection end of the filter drier
4. Braze the completed filter drier/Accurator assembly to the liquid service valve.
5. Connect the field supplied line set to the filter drier/Accurator assembly and the suction valve. A sweat connection is required at the suction valve and flare connection is required for the mixed phase line.
6. Insulate any exposed areas between the line set and the liquid valve.

38QRF Units

1. Assemble the connector tubes to the factory supplied filter drier by brazing the factory supplied flare connectors to the inlet and outlet for the filter drier (see Fig. 16)

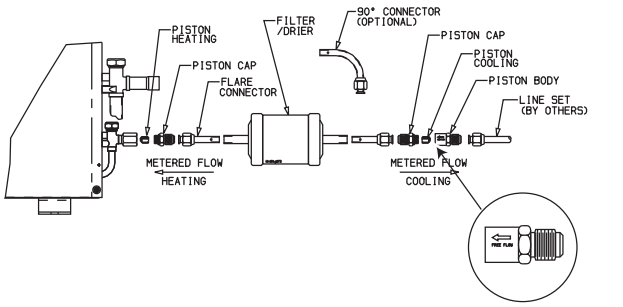

Fig. 16 - 38QRF018-036 Connector Tube Assembly

2. Perform step 2 and 3 from the 38HDF section.
3. Remove the plastic cap from the liquid and suction service valve on the 38QRF unit and assemble the heating piston and piston cap supplied with the outdoor unit as shown in Fig. 17.

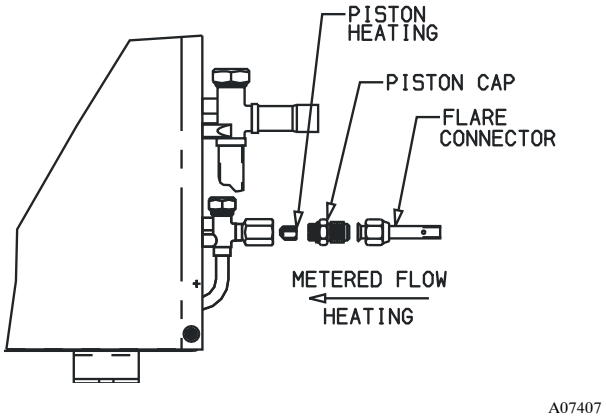

Fig. 17 - AccuRater (bypass type) Metering Device Components Heat Pump Systems Only

NOTE: **The Teflon seal on the piston should point towards the liquid service valve. The size of the factory supplied piston might have to be adjusted for long line applications (over 80 ft / 24.4 m). Refer to the Duct Free Long Line Application Guide for additional information.**

4. Attach the flare end of the filter drier assembly to the piston cap (see Fig. 17).
5. Connect the field supplied line set to the filter drier assembly and to the suction valve.
6. Insulate any exposed areas between filter drier and liquid valve.

Complete Outdoor Power and Control Wiring

⚠ WARNING

ELECTRICAL SHOCK HAZARD

Failure to follow this warning could result in personal injury or death.

The unit cabinet must have an uninterrupted or unbroken ground to minimize personal injury if an electrical fault should occur. The ground may consist of electrical wire or metal conduit when installed in accordance with existing electrical codes.

⚠ CAUTION

UNIT DAMAGE HAZARD

Failure to follow this caution may result in equipment damage or improper operation.

Unit failure as a result of operation on improper line voltage or excessive phase imbalance constitutes abuse and may cause damage to electrical components. Such operation could void any applicable Carrier warranty.

⚠ WARNING

ELECTRICAL SHOCK HAZARD

Failure to follow this warning could result in personal injury or death.

Before performing service or maintenance, be sure indoor unit main power switch is turned OFF and indoor blower has stopped.

Lock out and tag switch with a suitable warning label.

Power Wiring

1. Mount outdoor power disconnect. The unit is factory wired for the voltage shown on the unit nameplate. The fused disconnect switch must be provided within sight of the unit, readily accessible, but out of reach of children. Provisions for locking the disconnect switch on the OFF (open) position is advisable. The disconnect switch must comply with NEC and local codes. **Protect the unit and wiring using only the recommended fuse/circuit breaker size. See Table 8.**
2. Run power wiring from main box to disconnect per NEC and local codes.
3. Run power wiring from the disconnect switch to outdoor unit. Use only minimum 60°C copper conductors between the disconnect switch and the unit for field power connection.
4. Route the field power wires through the conduit connection opening in the unit side panel and connect in junction box as shown in Fig 18. The unit and power wiring must be grounded.

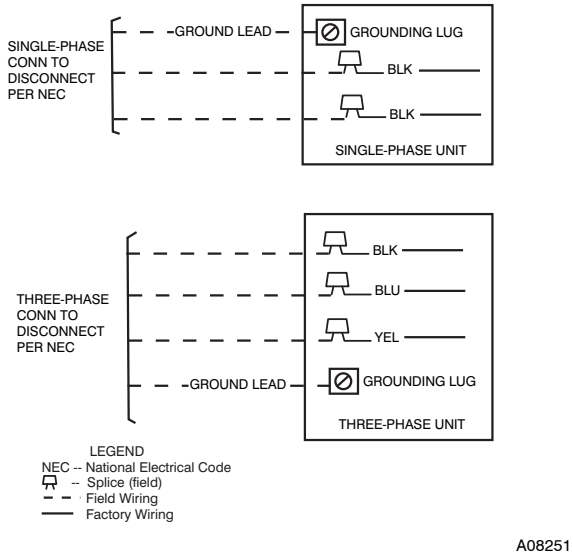

Fig. 18 - Line Power Connections

NOTE: **Operating unit on improper line voltage constitutes abuse and may affect Carrier warranty. DO NOT install unit in a system where voltage may fluctuate above or below permissible limits.**

Control Wiring

The control circuit is 24 volts AC (minimum 40VA) supplied from the indoor unit.

1. Make sure you have enough control wires to cover the distance between the indoor and outdoor unit.
2. Route one end of the control wiring through the opening provided in the unit side panel and connect to the control terminal strip using either Fig. 19 for 38HDF units and Fig. 20 for 38QRF units.

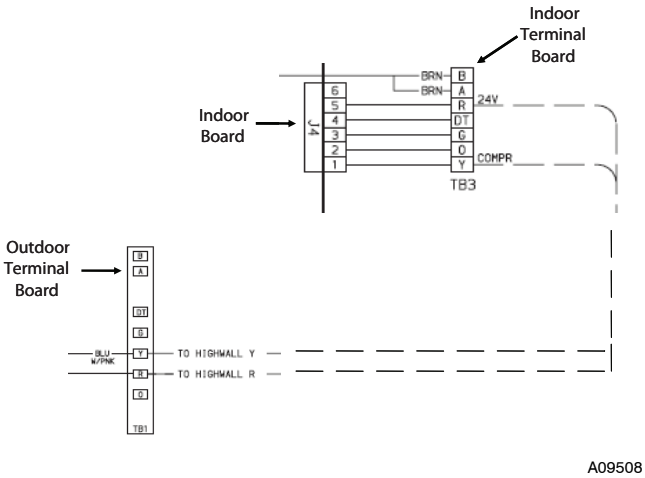

Fig. 19 - 38HDF Control Terminal Strip

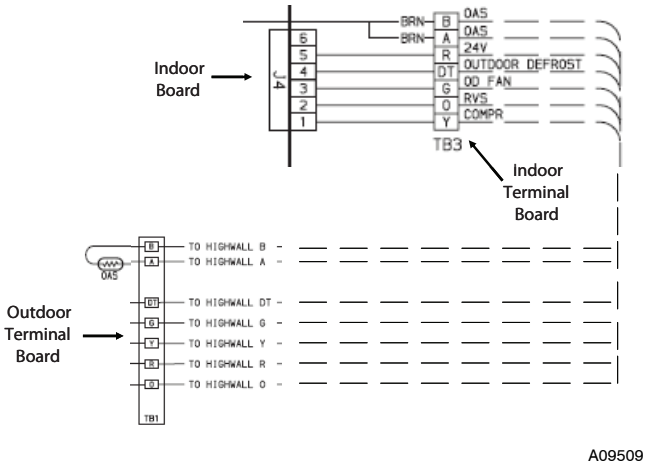

Fig. 20 - 38QRF Control Terminal Strip

NOTE: Use No. 18 AWG color-coded, insulated (35°C minimum) wire. If the distance between the indoor and outdoor unit is greater than 100 ft. (30.5 m), as measured along the control voltage wires, use No. 16 AWG color-coded wire to avoid excessive voltage drop.

ELECTRICAL DATA

Table 10 – 38HDF/38QRF Electrical Data

38HDF/38QRF UNIT SIZE	V–PH–Hz	VOLTAGE RANGE*		COMPRESSOR		OUTDOOR FAN MOTOR			MIN CKT AMPS	FUSE/ CKT BKR AMPS
		Min	Max	RLA	LRA	FLA	NEC Hp	kW Out		
018	208/230–1–60	187	253	9.0	48.0	0.80	0.125	0.09	12.1	20
024	208/230–1–60	187	253	12.8	58.3	0.80	0.125	0.09	16.8	25
38QRF030	208/230–1–60	187	253	14.1	73.0	1.50	0.25	0.19	18.4	30
38HDF030	208/230–1–60	187	253	14.1	73.0	0.80	0.125	0.09	18.4	30
035	208/230–1–60	187	253	16.7	79.0	1.50	0.25	0.19	22.3	35
	208/230–3–60	187	253	10.4	73.0	1.50	0.25	0.19	14.5	20
	460–3–60	414	506	5.8	38.0	0.80	0.25	0.19	8.7	15
036	208/230–1–60	187	253	17.9	112.0	1.45	0.25	0.19	23.8	40
	208/230–3–60	187	253	13.2	88.0	1.45	0.25	0.19	18.0	30
	460–3–60	414	506	6.0	44.0	0.80	0.25	0.19	8.3	15

Table 11 – 40KMC Fan coil Electrical Data

40KMC Unit Size	V–PH–Hz	Voltage Range		FAN		Condensate Pump FLA	Louver Motor FLA	Power	
		Min.	Max	FLA	Watts			MIN CKT AMPS	FUSE/ CKT BKR AMPS
018	208/230–1–60	187	253	0.55	120	0.06	0.01	0.8	15
024	208/230–1–60	187	253	0.50	110	0.06	0.01	0.7	15
030	208/230–1–60	187	253	0.95	210	0.06	0.01	1.3	15
036	208/230–1–60	187	253	0.95	210	0.06	0.01	1.3	15

Table 12 – 40KMQ Fan Coil Electrical Data

40KMQ Unit Size	V–PH–Hz	Voltage Range		FAN		Condensate Pump FLA	Louver Motor FLA	Electric Heaters		Power	
		Min.	Max	FLA	Motor Power (Watts)			kW	FLA	MIN CKT AMPS	FUSE/ CKT BKR AMPS
018	208/230–1–60	187	253	0.50	110	0.06	0.01	3	12.5	16.3	20
024	208/230–1–60	187	253	0.50	110	0.06	0.01	3	12.5	16.3	20
030	208/230–1–60	187	253	0.95	210	0.06	0.01	3	12.5	16.9	20
036	208/230–1–60	187	253	0.95	210	0.06	0.01	3	12.5	16.9	20

*Permissible limits of the voltage range at which unit will operate satisfactorily.

LEGEND

FLA – Full Load Amps
MCA – Minimum Circuit Amps per NEC Section 430–24
NEC – National Electrical Code
RLA – Rated Load Amps (Compressor)

NOTES:

1. In compliance with NEC requirements for multi–motor and combination load equipment (refer to NEC Articles 430 and 440), the over–current protective device for the unit shall be fuse or equipped with a breaker.
2. Motor RLA values are established in accordance with UL (Underwriters Laboratories) Standard 465.

C US

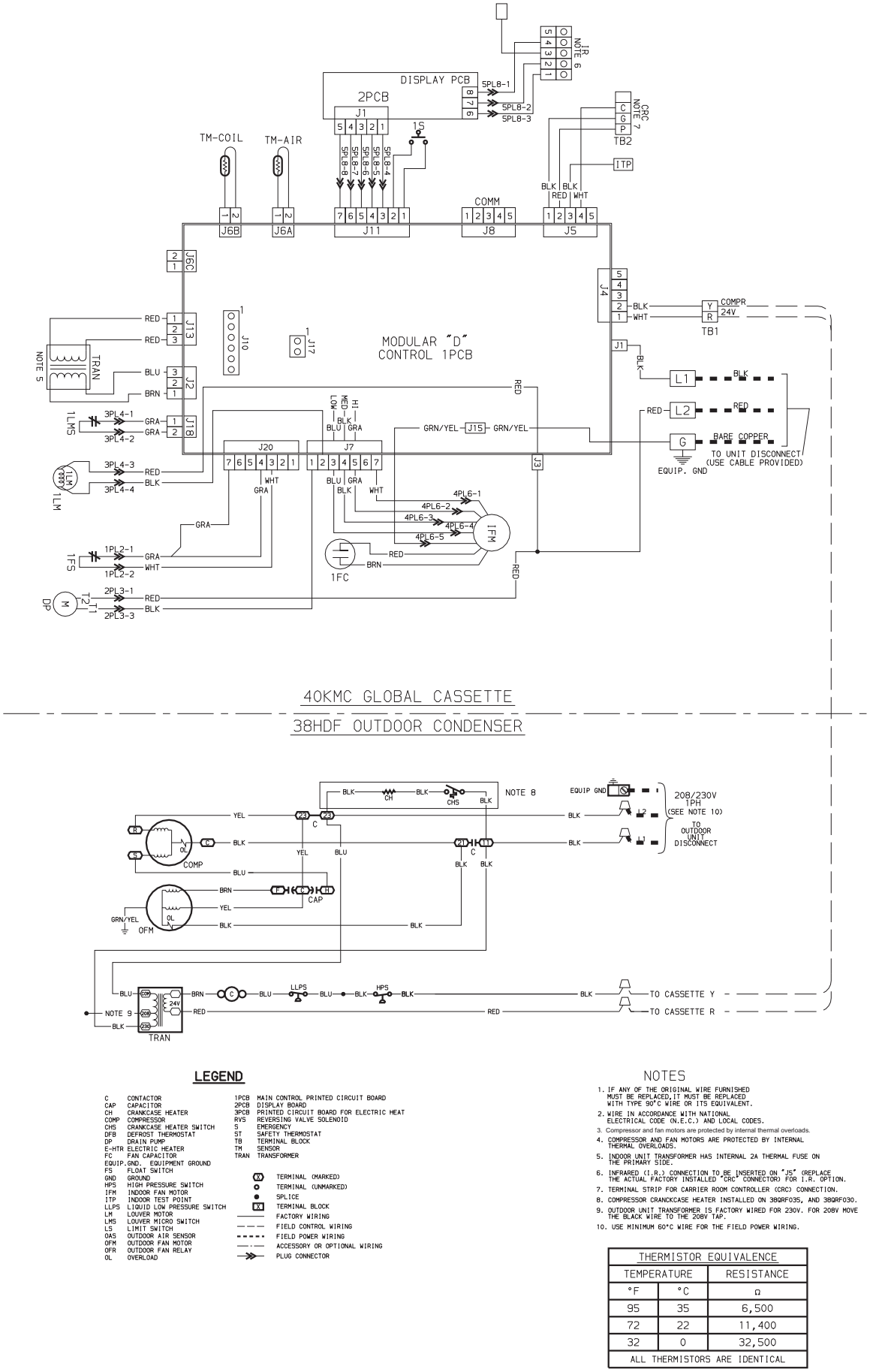

LEGEND

C	CONTACTOR	1PCB	MAIN CONTROL PRINTED CIRCUIT BOARD
CAP	CAPACITOR	2PCB	DISPLAY BOARD
CH	CRANKCASE HEATER	3PCB	PRINTED CIRCUIT BOARD FOR ELECTRIC HEAT
COMP	COMPRESSOR	RVS	REVERSING VALVE SOLENOID
CHS	CRANKCASE HEATER SWITCH	S	EMERGENCY
DFB	DEFROST THERMOSTAT	ST	SAFETY THERMOSTAT
DP	DRAIN PUMP	TB	TERMINAL BLOCK
E-HTR	ELECTRIC HEATER	TM	SENSOR
FC	FAN CAPACITOR	TRAN	TRANSFORMER
EQUIP.GND.	EQUIPMENT GROUND		
FS	FLOAT SWITCH		
GND	GROUND	(X)	TERMINAL (MARKED)
HPS	HIGH PRESSURE SWITCH	○	TERMINAL (UNMARKED)
IFM	INDOOR FAN MOTOR	●	SPLICE
ITP	INDOOR TEST POINT	[X]	TERMINAL BLOCK
LLPS	LIQUID LOW PRESSURE SWITCH	———	FACTORY WIRING
LM	LOUVER MOTOR	— — —	FIELD CONTROL WIRING
LMS	LOUVER MICRO SWITCH	- - - -	FIELD POWER WIRING
LS	LIMIT SWITCH	—·—	ACCESSORY OR OPTIONAL WIRING
OAS	OUTDOOR AIR SENSOR	—≫—	PLUG CONNECTOR
OFM	OUTDOOR FAN MOTOR		
OFR	OUTDOOR FAN RELAY		
OL	OVERLOAD		

NOTES

1. IF ANY OF THE ORIGINAL WIRE FURNISHED MUST BE REPLACED, IT MUST BE REPLACED WITH TYPE 90°C WIRE OR ITS EQUIVALENT.
2. WIRE IN ACCORDANCE WITH NATIONAL ELECTRICAL CODE (N.E.C.) AND LOCAL CODES.
3. Compressor and fan motors are protected by internal thermal overloads.
4. COMPRESSOR AND FAN MOTORS ARE PROTECTED BY INTERNAL THERMAL OVERLOADS.
5. INDOOR UNIT TRANSFORMER HAS INTERNAL 2A THERMAL FUSE ON THE PRIMARY SIDE.
6. INFRARED (I.R.) CONNECTION TO BE INSERTED ON "J5" (REPLACE THE ACTUAL FACTORY INSTALLED "CRC" CONNECTOR) FOR I.R. OPTION.
7. TERMINAL STRIP FOR CARRIER ROOM CONTROLLER (CRC) CONNECTION.
8. COMPRESSOR CRANCKCASE HEATER INSTALLED ON 38QRF035, AND 38QRF030.
9. OUTDOOR UNIT TRANSFORMER IS FACTORY WIRED FOR 230V. FOR 208V MOVE THE BLACK WIRE TO THE 208V TAP.
10. USE MINIMUM 60°C WIRE FOR THE FIELD POWER WIRING.

THERMISTOR EQUIVALENCE		
TEMPERATURE		RESISTANCE
°F	°C	Ω
95	35	6,500
72	22	11,400
32	0	32,500
ALL THERMISTORS ARE IDENTICAL		

50057

Fig. 21 - 40KMC / 38HDF Cooling Only System Wiring Diagram

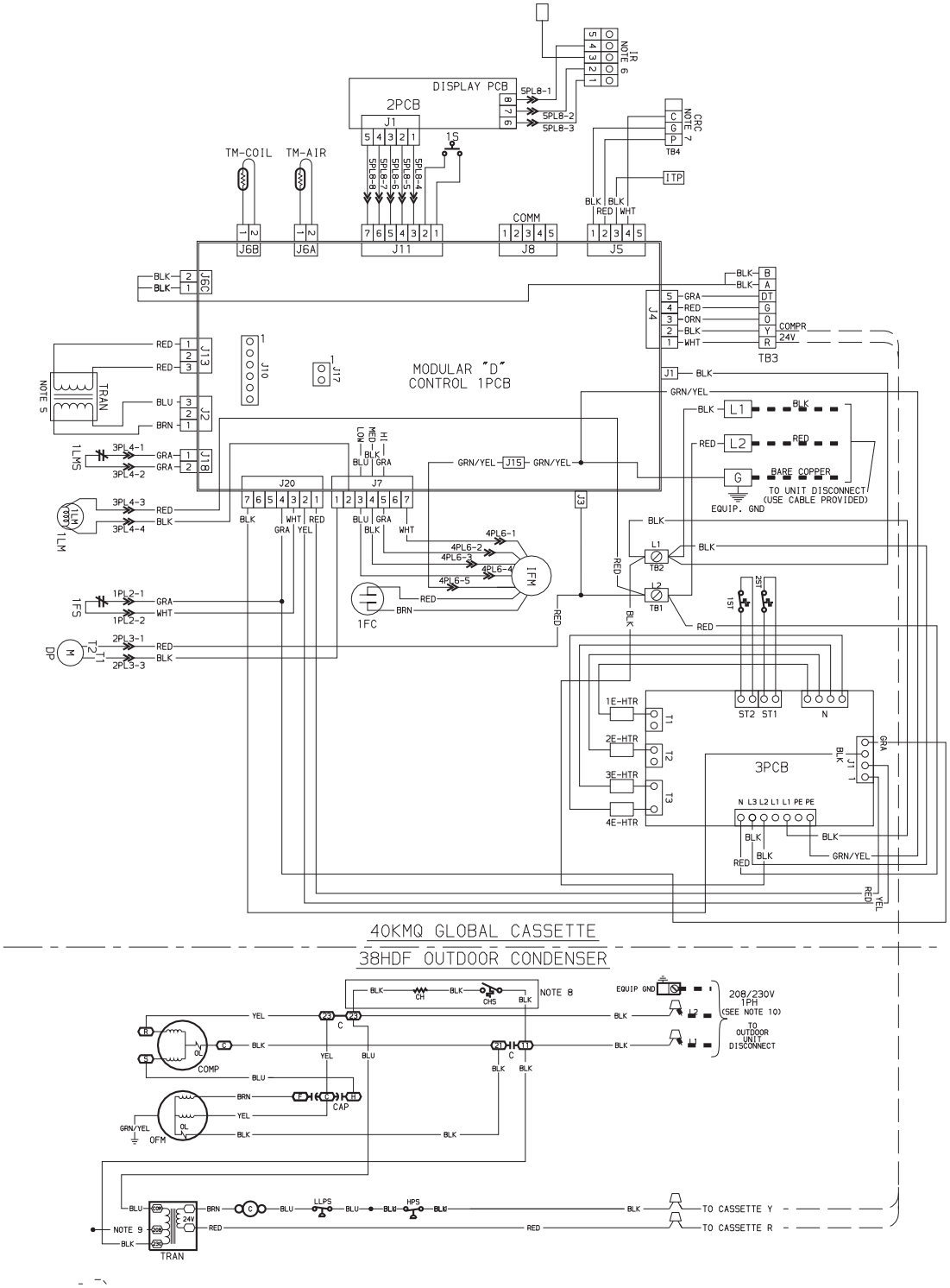

LEGEND

C	CONTACTOR
CAP	CAPACITOR
CH	CRANKCASE HEATER
COMP	COMPRESSOR
CHS	CRANKCASE HEATER SWITCH
DFB	DEFROST THERMOSTAT
DP	DRAIN PUMP
E-HTR	ELECTRIC HEATER
FC	FAN CAPACITOR
EQUIP.GND.	EQUIPMENT GROUND
FS	FLOAT SWITCH
GND	GROUND
HPS	HIGH PRESSURE SWITCH
IFM	INDOOR FAN MOTOR
ITP	INDOOR TEST POINT
LLPS	LIQUID LOW PRESSURE SWITCH
LM	LOUVER MOTOR
LMS	LOUVER MICRO SWITCH
LS	LIMIT SWITCH
OAS	OUTDOOR AIR SENSOR
OFM	OUTDOOR FAN MOTOR
OFR	OUTDOOR FAN RELAY
OL	OVERLOAD
1PCB	MAIN CONTROL PRINTED CIRCUIT BOARD
2PCB	DISPLAY BOARD
3PCB	PRINTED CIRCUIT BOARD FOR ELECTRIC HEAT
RVS	REVERSING VALVE SOLENOID
S	EMERGENCY
ST	SAFETY THERMOSTAT
TB	TERMINAL BLOCK
TM	SENSOR
TRAN	TRANSFORMER

- TERMINAL (MARKED)
- TERMINAL (UNMARKED)
- SPLICE
- TERMINAL BLOCK
- FACTORY WIRING
- FIELD CONTROL WIRING
- FIELD POWER WIRING
- ACCESSORY OR OPTIONAL WIRING
- PLUG CONNECTOR

NOTES

1. IF ANY OF THE ORIGINAL WIRE FURNISHED MUST BE REPLACED,IT MUST BE REPLACED WITH TYPE 90°C WIRE OR ITS EQUIVALENT.
2. WIRE IN ACCORDANCE WITH NATIONAL ELECTRICAL CODE (N.E.C.) AND LOCAL CODES.
3. Compressor and fan motors are protected by internal thermal overloads.
4. COMPRESSOR AND FAN MOTORS ARE PROTECTED BY INTERNAL THERMAL OVERLOADS.
5. INDOOR UNIT TRANSFORMER HAS INTERNAL 2A THERMAL FUSE ON THE PRIMARY SIDE.
6. INFRARED (I.R.) CONNECTION TO BE INSERTED ON "J5" (REPLACE THE ACTUAL FACTORY INSTALLED "CRC" CONNECTOR) FOR I.R. OPTION.
7. TERMINAL STRIP FOR CARRIER ROOM CONTROLLER (CRC) CONNECTION.
8. COMPRESSOR CRANCKCASE HEATER INSTALLED ON 38QRF03S, AND 38QRF030.
9. OUTDOOR UNIT TRANSFORMER IS FACTORY WIRED FOR 230V. FOR 208V MOVE THE BLACK WIRE TO THE 208V TAP.
10. USE MINIMUM 60°C WIRE FOR THE FIELD POWER WIRING.

THERMISTOR EQUIVALENCE		
TEMPERATURE		RESISTANCE
°F	°C	Ω
95	35	6,500
72	22	11,400
32	0	32,500
ALL THERMISTORS ARE IDENTICAL		

50058

Fig. 22 - 40KMQ / 38HDF Heat/Cool System Wiring Diagram with Electric Heaters

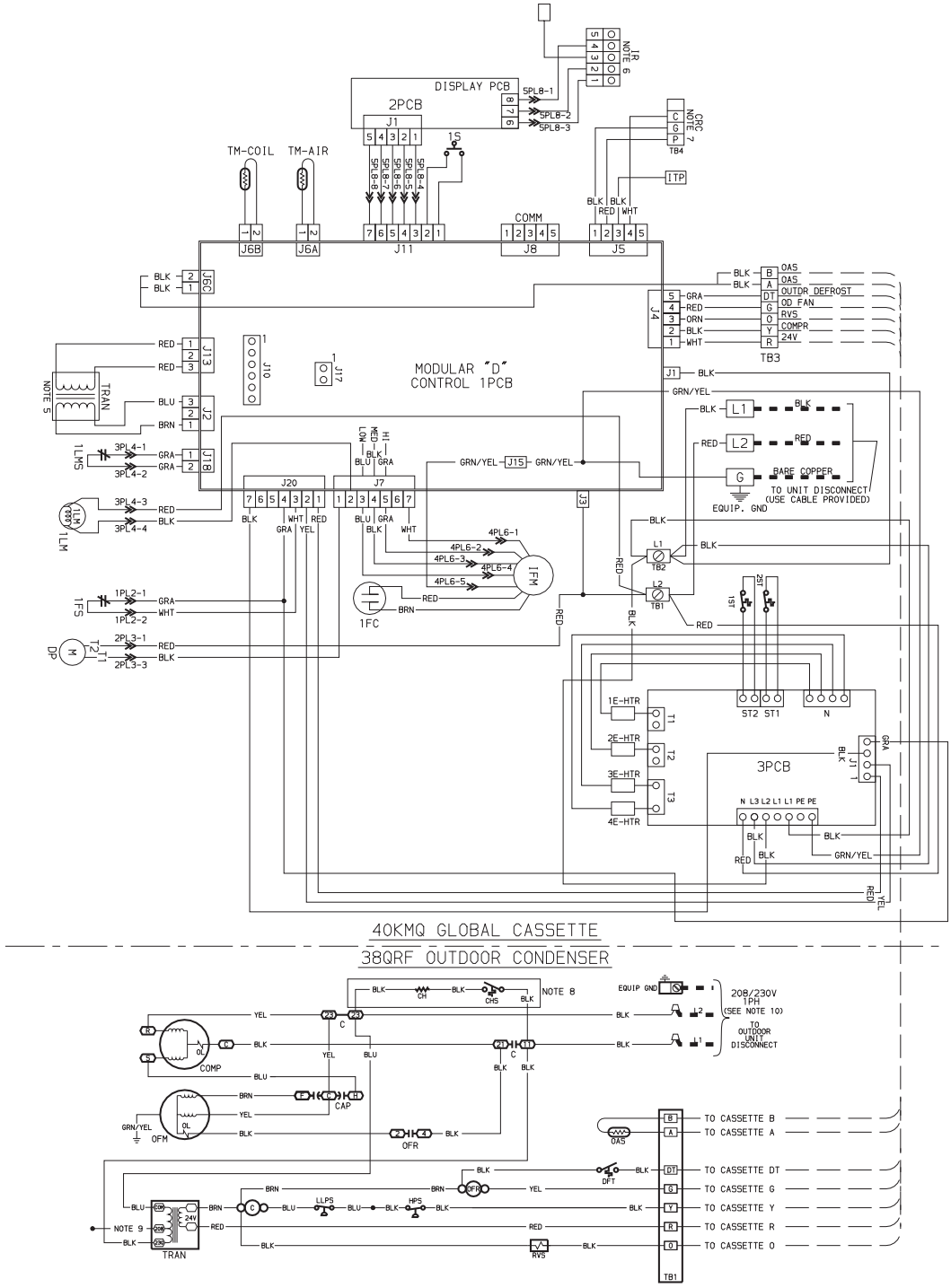

LEGEND

C	CONTACTOR	1PCB	MAIN CONTROL PRINTED CIRCUIT BOARD
CAP	CAPACITOR	2PCB	DISPLAY BOARD
CH	CRANKCASE HEATER	3PCB	PRINTED CIRCUIT BOARD FOR ELECTRIC HEAT
COMP	COMPRESSOR	RVS	REVERSING VALVE SOLENOID
CHS	CRANKCASE HEATER SWITCH	S	EMERGENCY
DFB	DEFROST THERMOSTAT	ST	SAFETY THERMOSTAT
DP	DRAIN PUMP	TB	TERMINAL BLOCK
E-HTR	ELECTRIC HEATER	TM	SENSOR
FC	FAN CAPACITOR	TRAN	TRANSFORMER
EQUIP.GND.	EQUIPMENT GROUND		
FS	FLOAT SWITCH		
GND	GROUND		TERMINAL (MARKED)
HPS	HIGH PRESSURE SWITCH		TERMINAL (UNMARKED)
IFM	INDOOR FAN MOTOR		SPLICE
ITP	INDOOR TEST POINT		TERMINAL BLOCK
LLPS	LIQUID LOW PRESSURE SWITCH		FACTORY WIRING
LM	LOUVER MOTOR		FIELD CONTROL WIRING
LMS	LOUVER MICRO SWITCH		FIELD POWER WIRING
LS	LIMIT SWITCH		ACCESSORY OR OPTIONAL WIRING
OAS	OUTDOOR AIR SENSOR		PLUG CONNECTOR
OFM	OUTDOOR FAN MOTOR		
OFR	OUTDOOR FAN RELAY		
OL	OVERLOAD		

NOTES

1. IF ANY OF THE ORIGINAL WIRE FURNISHED MUST BE REPLACED,IT MUST BE REPLACED WITH TYPE 90°C WIRE OR ITS EQUIVALENT.
2. WIRE IN ACCORDANCE WITH NATIONAL ELECTRICAL CODE (N.E.C.) AND LOCAL CODES.
3. Compressor and fan motors are protected by internal thermal overloads.
4. COMPRESSOR AND FAN MOTORS ARE PROTECTED BY INTERNAL THERMAL OVERLOADS.
5. INDOOR UNIT TRANSFORMER HAS INTERNAL 2A THERMAL FUSE ON THE PRIMARY SIDE.
6. INFRARED (I.R.) CONNECTION TO BE INSERTED ON "J5" (REPLACE THE ACTUAL FACTORY INSTALLED "CRC" CONNECTOR) FOR I.R. OPTION.
7. TERMINAL STRIP FOR CARRIER ROOM CONTROLLER (CRC) CONNECTION.
8. COMPRESSOR CRANCKCASE HEATER INSTALLED ON 38QRF035, AND 38QRF030.
9. OUTDOOR UNIT TRANSFORMER IS FACTORY WIRED FOR 230V. FOR 208V MOVE THE BLACK WIRE TO THE 208V TAP.
10. USE MINIMUM 60°C WIRE FOR THE FIELD POWER WIRING.

THERMISTOR EQUIVALENCE		
TEMPERATURE		RESISTANCE
°F	°C	Ω
95	35	6,500
72	22	11,400
32	0	32,500
ALL THERMISTORS ARE IDENTICAL		

50059

Fig. 23 - 40KMQ / 38QRF Heat Pump System Wiring Diagram with Electric Heaters

Run Power Wiring for Indoor Unit

Be sure field wiring complies with local building codes and NEC, and unit voltage is within limits shown in Table 11 and Table 12.

Contact local power company for correction of improper line voltage.

⚠ WARNING

ELECTRICAL SHOCK HAZARD

Failure to follow this warning could result in personal injury or death.

Before installing, modifying, or servicing system, main electrical disconnect switch must be in the OFF position. There may be more than 1 disconnect switch. Lock out and tag switch with a suitable warning label.

⚠ CAUTION

UNIT DAMAGE HAZARD

Failure to follow this caution may result in equipment damage or improper operation.

Unit failure as a result of operation on improper line voltage or excessive phase imbalance constitutes abuse and may cause damage to electrical components. Such operation could void any applicable Carrier warranty.

NOTE: **Use copper wire only between disconnect switch(es) and unit.**

NOTE: **Install branch circuit disconnect of adequate size to handle unit starting current per NEC. Locate disconnect within sight of, and readily accessible from, unit, per section 440-14 of NEC. Some codes allow indoor unit to share disconnect with outdoor unit if disconnect can be locked; check local code before installing in this manner.**

The 40KMC/KMQ units require their own power supply.

1. Locate the indoor power supply.
2. Locate and install disconnect switch per NEC and local codes.
3. Run power supply wiring to disconnect switch.
4. Run power wiring from disconnect switch to control box area. Use copper wire only between the disconnect switch and unit. Use minimum 60°C wires for field power connection.
5. Remove the external control box cover.
6. Place wiring through the 7/8 in. or 1-1/8 in. knockouts on the bottom and on the right hand side of the external control box (high voltage side). See Fig. 24 and Fig. 25.

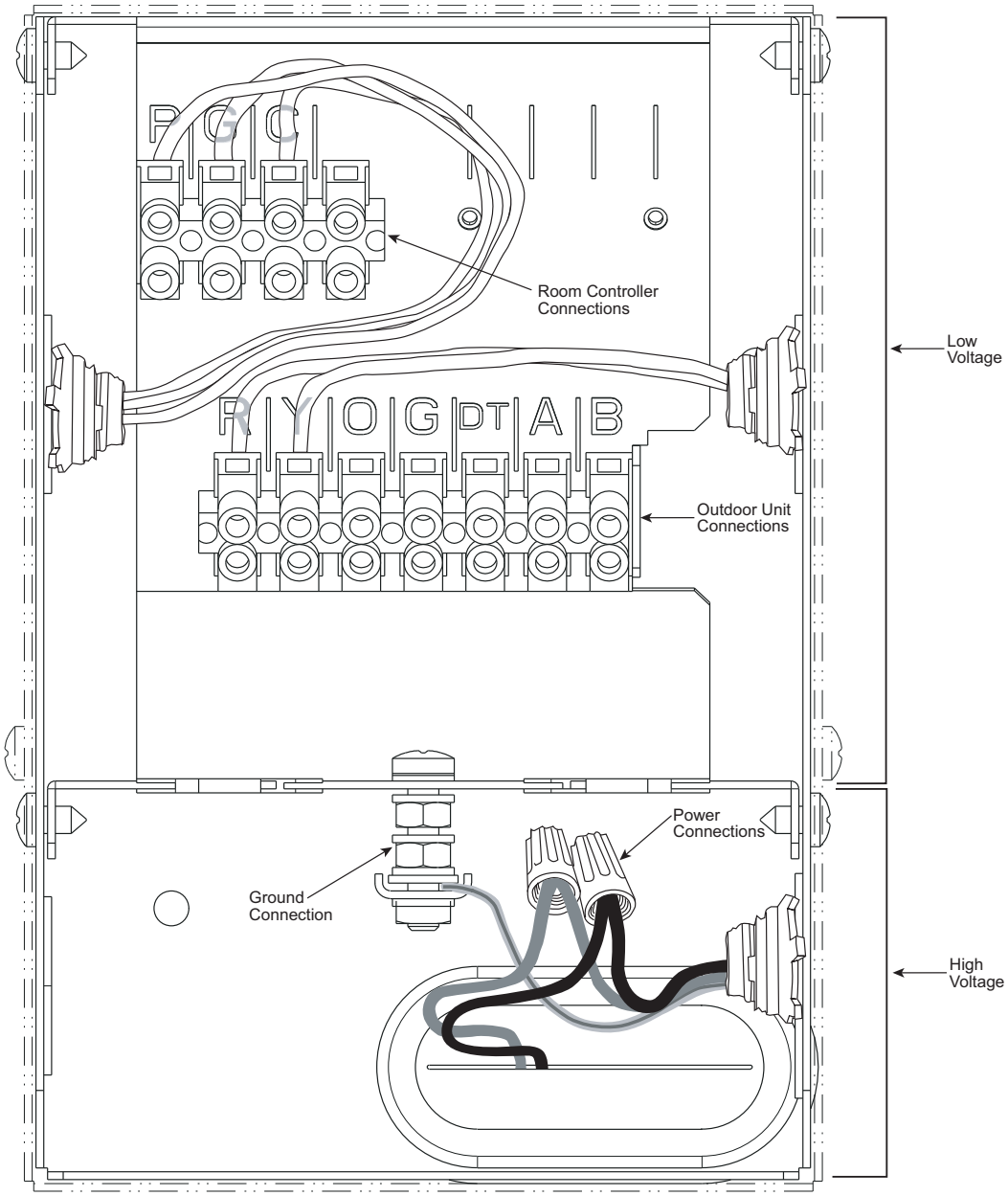

Fig. 24 - 40KMC Unit Matched to 38HDF Outdoor Unit - Wiring Connection (Cooling Only System)

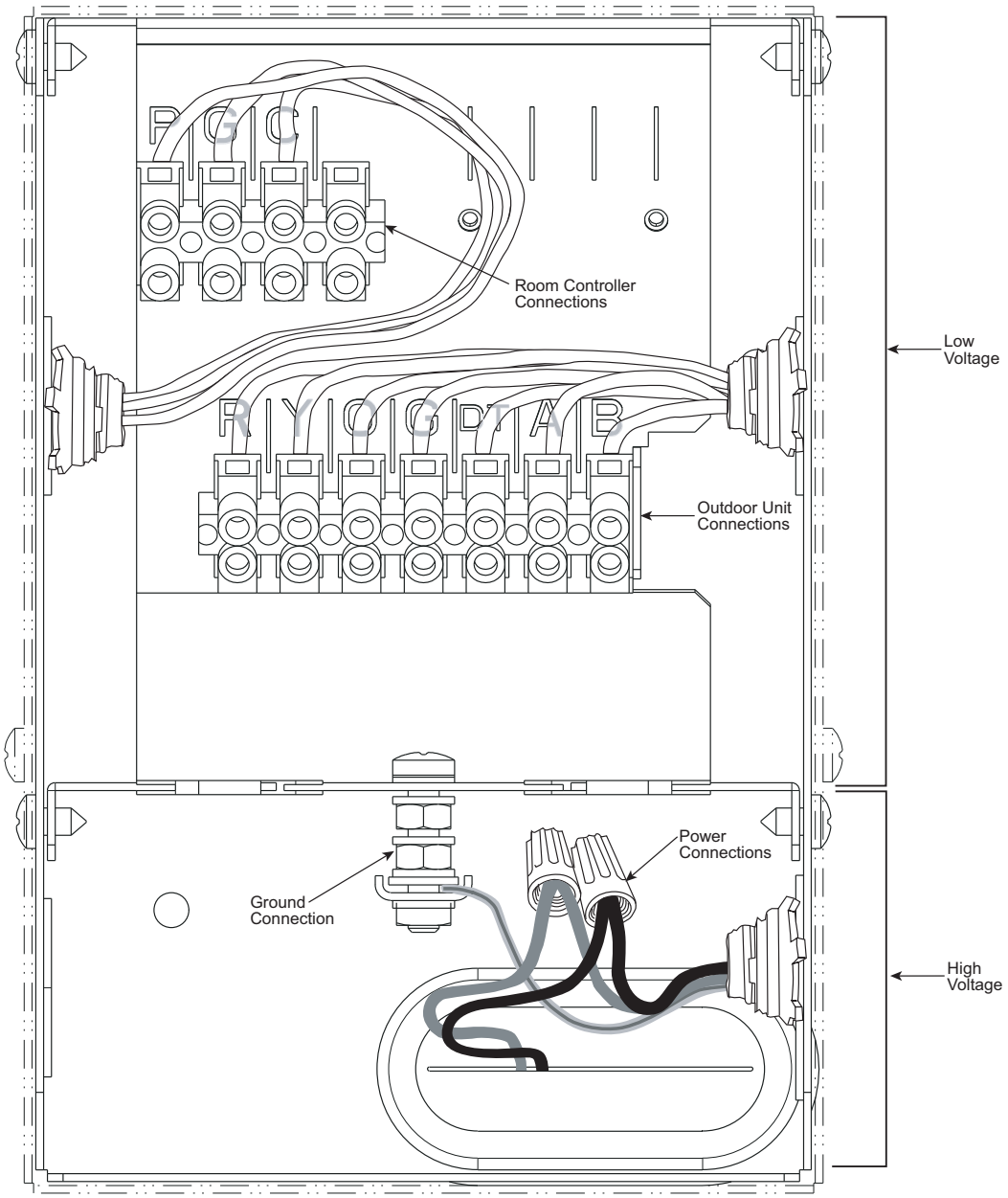

Fig. 25 – 40KMQ Unit Matched to 38HDF Outdoor Unit – Wiring Connection (Cooling with Electric Heat System)

7. Connect L1 to the black wire and L2 to the red wire using wire nuts and fix the ground wire between the two washers.

The internal control panel can be accessed by opening the grille and removing the metal cover attached by four screws.

NOTE: **The internal control panel does not need to be accessed during the installation process unless there is a need for service.**

8. If any accessories are being installed, refer to the individual accessory instructions for guidance on wire routing at this time.

Install All Power, Interconnecting Wiring, Piping and Drain Hose to Indoor Unit .

1. Run control wiring from the outdoor unit through the access hole in the wall and make sure you have enough wire to reach the control box of the unit once hung on the mounting plate.
2. Complete refrigerant piping connections.
   a. cut the extreme end of the tubes and remove any copper shavings with a de-burring blade.
   b. Remove the flare nut from the "Flare" connection body of the indoor unit and insert them into the pipes.
   c. make the flares to the pipe ends with the proper flaring too. The flare end must not have any burrs or imperfections. the flared walls must be uniform. See Fig. 26 and Fig. 27.

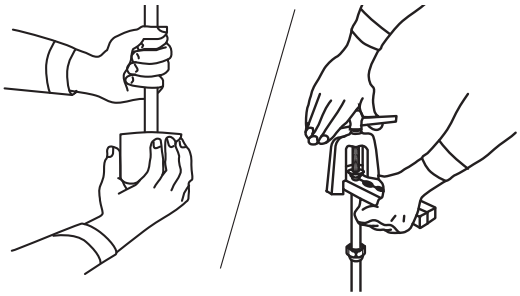

A07199

Fig. 26 - Removing Burrs

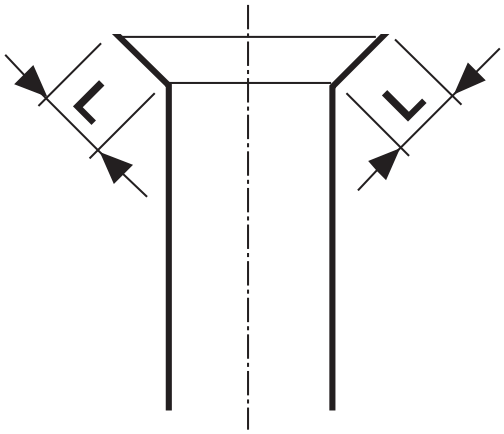

A07200

Fig. 27 - Flared Walls are Equal

   d. Lubricate the end of the pipe and thread of the flare connection with refrigerant oil. Tighten by hand and then use two wrenches (see Fig. 28) to tighten all connections fully applying the tightening torque shown in Table 13.

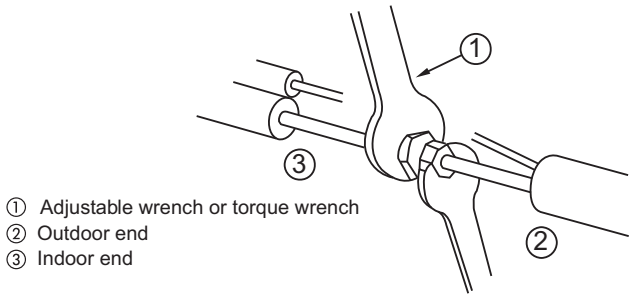

A07201

Fig. 28 - Tightening Connections

Table 13 – Tightening Torque

TUBE DIAMETER (in.)	TORQUE (ft.–lb)
3/8 in.	31
5/8 in.	48
3/4 in.	74

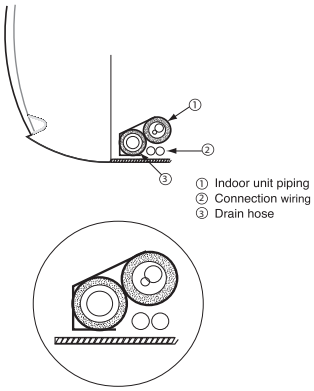

A08364

Fig. 29 - Location of Piping, Hose, and Wiring

3. Connect condensate drain piping
   Observe all local sanitary codes when installing condensate drains. The condensate may be discharged at a maximum height of 7-1/8 in. (181 mm) above the unit as long as the ascending tube is vertical and aligned with drainage flange. If it is necessary to discharge the condensate from a level above 7-1/8 in. (181 mm), install an auxiliary water discharge pump and a float valve. A float valve is recommended to stop the compressor if there is a fault at the auxiliary pump.

a. Use hard polyvinyl chloride (PVC) pipe material with nominal ID of 1 in. to connect at drain line. To ensure correct condensate water flow, the pipe should have a gradient of 2% without obstruction. See Fig. 30

⚠ WARNING

PERSONAL INJURY HAZARD

Failure to follow this caution may result in personal injury.

The drain tube extension must be securely fastened to the condensate drain. Failure to do so could result in condensate water dripping on to the floor.

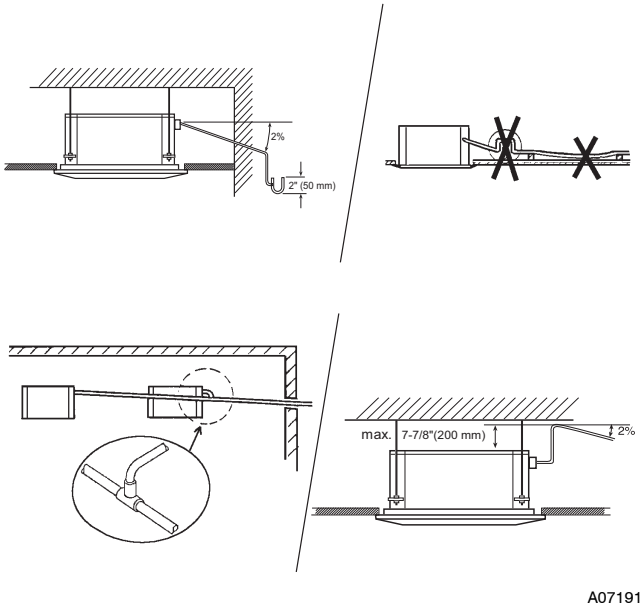

Fig. 30 - Condensate Drain Pipe

b. A trap of at least 2 in. (51 mm) in depth should be made to prevent unpleasant odors from reaching the room.

c. Insulate condensate pipe with condensation proof material such as polyurethane, propylene, or neoprene of 3/16 in. to 3/8 in. thickness.

4. Complete Control Wiring

a. Route the control wiring through the 7/8 in. knockouts on the left or right hand side of the external control box (low voltage side).

b. Connect R and Y wires to the terminal block for cooling only units (40KMC) and heat pump units (40KMQ) that are matched with the 38HDF outdoor units. See Fig. 24.

c. Connect the R, Y, O, G, DT, A, and B wires to the (PGB-1) 1 terminal on the 40KMQ heat pump indoor units. See Fig. 25.

5. Perform any modifications required for the accessory user interface. Three types of user interface can be used with the unit: Wall mounted wired control, Wireless remote control and Zone Manager.

a. Wall Mounted Remote Control
The unit comes ready from the factory for use with a wall mounted wired control. Refer to the installation instructions of the wired remote control for additional information. The wall mounted wired control connects to terminals P, G, and C located in the external control box. See Fig. 24 and Fig. 25. If there is a desire to control multiple units (up to 6) from one wired remote control, the units should be wired as shown in Fig. 31.

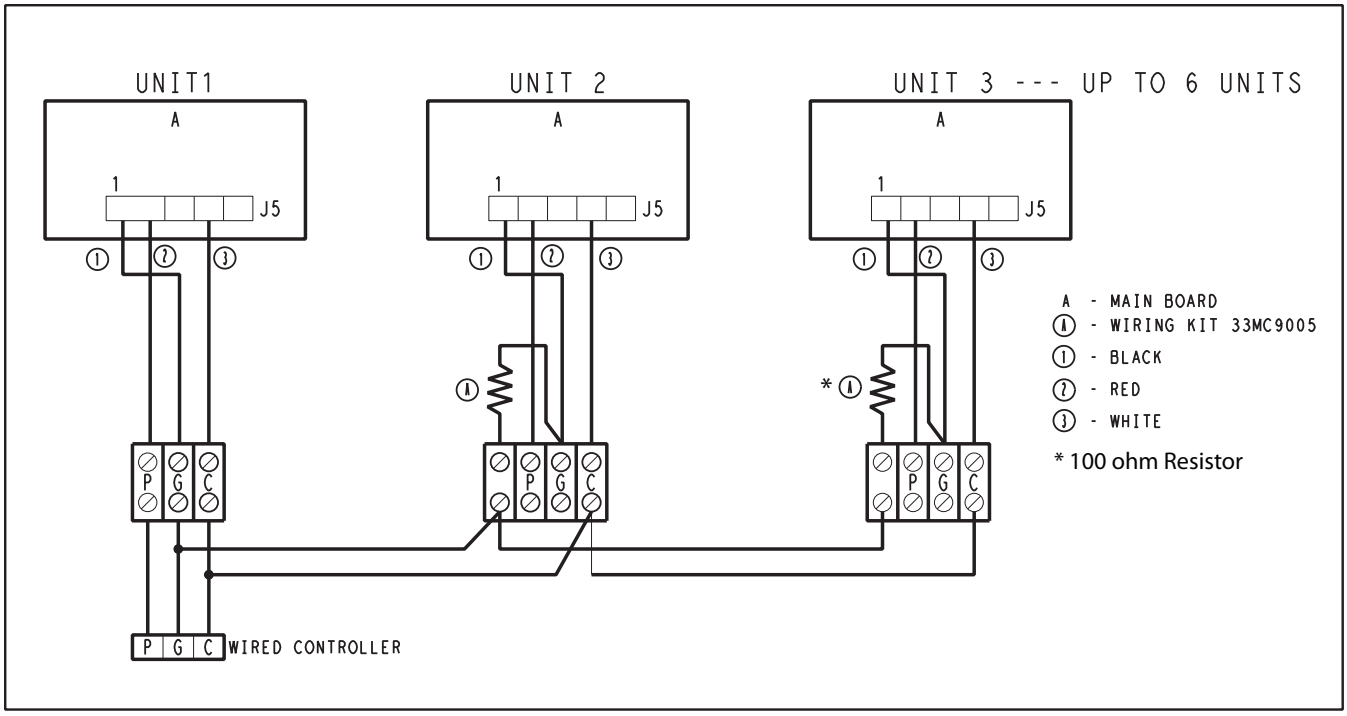

Fig. 31 - Multiple Unit Control Wiring

b. Wireless Remote Control
The unit is factory equipped with a wire harness that has one end connecting to the receiver board (Display PCB) and the other end is loose. See Fig. 32.

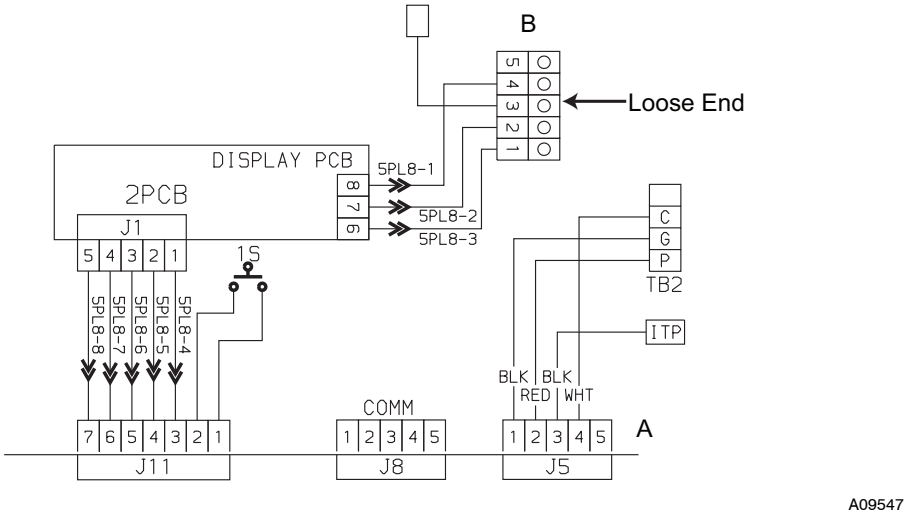

Fig. 32 - Wire Harness

To modify the unit for use with wireless remote do the following:

a. Remove the cover of the Internal Control Panel to get access to the microprocessor board. See Fig. 33.

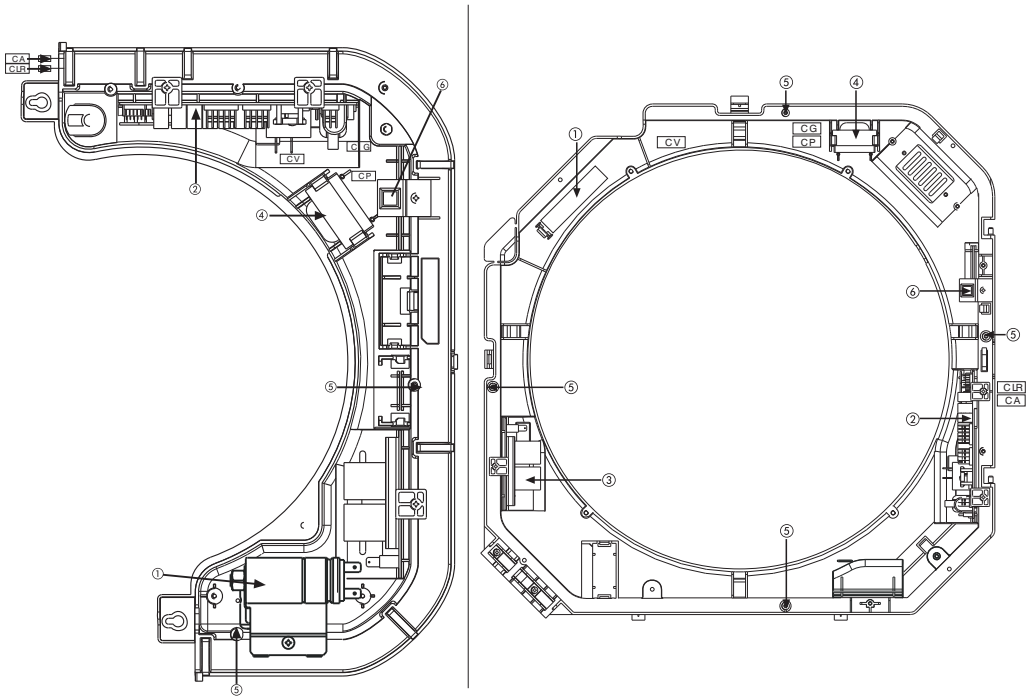

Fig. 33 - Internal Control Panel

b. Unplug the J5 connector (A) from the board (see Fig. 32).

c. Plug the Loose end (B) into the J5 Connector on the board

d. Reinstall the cover of the internal control panel

If you have two units installed in the same space and they need to work independently, the remote controls and the units need to be configured as follows:

Unit Configuration

Turn the unit off by pressing the ⏻. Press and hold the M and buttons of the remote control for more than 5 seconds. The display will be cleared and the time segments will display the first configuration item (rAdr=remote address) and the temperature segments will display the default value of this configuration item (Ab=control of both indoor units). Press ∧ and ∨ to change the default value to the new value of (a) or (b). Press the button to transmit the new configuration to the unit. Press the ⏻ button to leave the configuration menu.

Remote Control Configuration

Turn the unit off by pressing the ⏻ button. Press and hold the ∨ and buttons for more than 5 seconds. The display will be cleared and the time segments will display the first configuration item (CH=remote address) and the temperature segments will display the default value of this configuration item (Ab=control of both indoor units).

Press ∧ and ∨ to change the default value to the new value of (a) or (b). Press the button to transmit the new configuration to the unit. Press the ⏻ button to leave the configuration menu.

NOTE: When 30 seconds have elapsed and no buttons have been pressed, the remote control will automatically exit the configuration menu and resume its normal operation.

A wall mounted control or zone manager can be used to control a unit or multiple units.

Zone Manager

If a Zone Manager is required, the following steps should be performed at the same time the indoor control and power wiring are being connected:

a. Remove the cover of the Internal Control Panel to get access to the microprocessor board. See Fig. 33.
b. Plug the communication board to the J8 as shown in Fig. 34.
c. Connect one end of the wire harness supplied with the Zone Manager to the communication board.
d. Route the other end of the wire harness along the voltage control to the back of the unit.
e. Connect the other end of the wire harness to the field supplied wiring that will be connected to the zone manager as shown in Fig. 34 (shielded cables are required. Refer to Zone Manager Installation Instructions).
f. Reinstall the cover of the internal control panel.

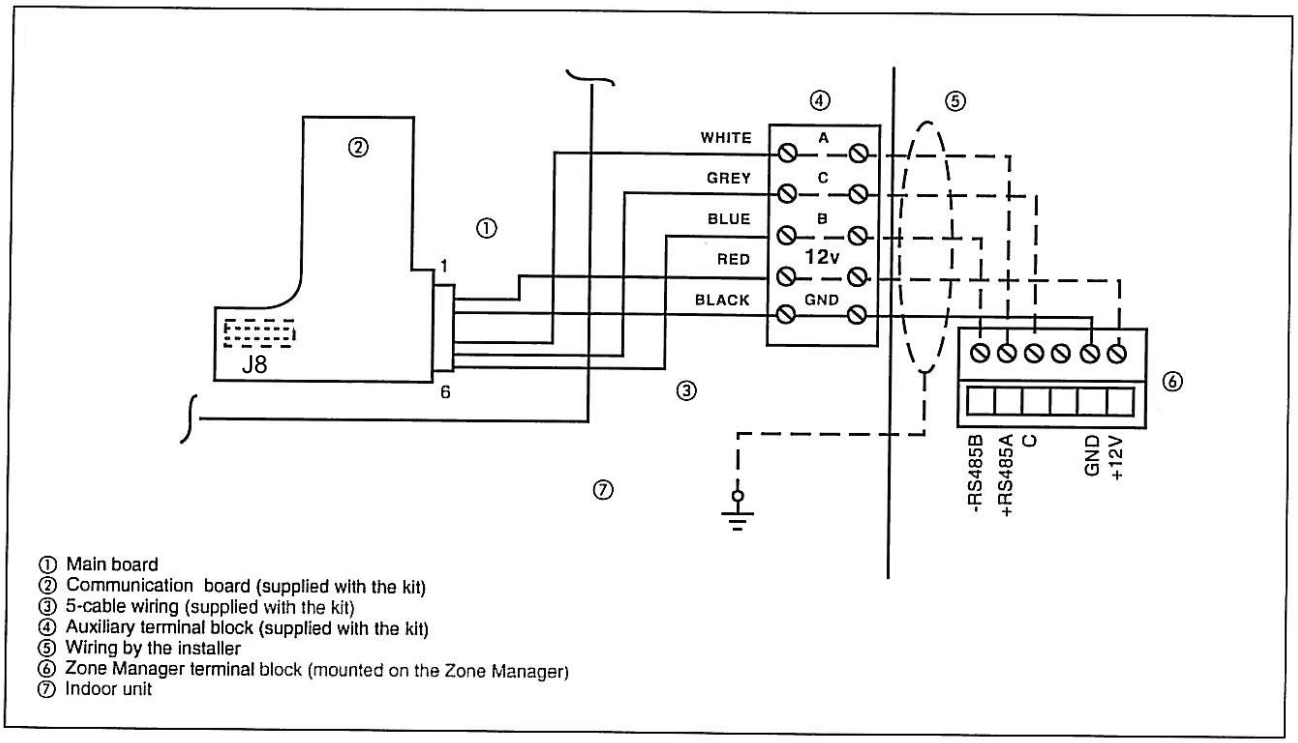

A09514

Fig. 34 - Wiring for Zone Manager

6. Carry a final check to make sure that the unit is level
7. Install the Grille and Frame Assembly
   a. Carefully unpack the assembly and check for damage sustained in transport.
   b. Attach the assembly to the unit by using the two hooks. See Fig. 35.

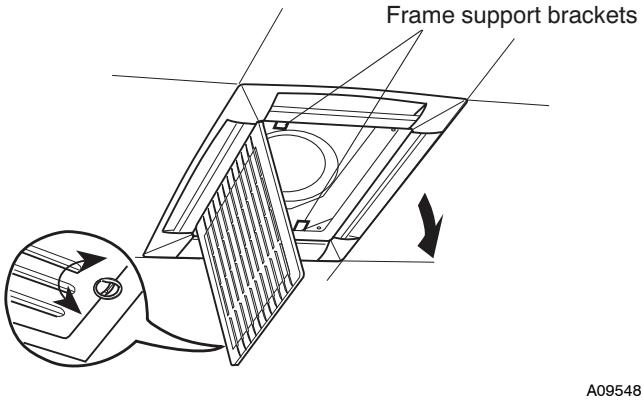

Fig. 35 - Attach Frame Assembly

   c. Tighten the factory supplied screws to fix the frame in position. See Fig. 36.
   d. Link the electrical connectors and insert the wires in cable clamp. See Fig. 36.

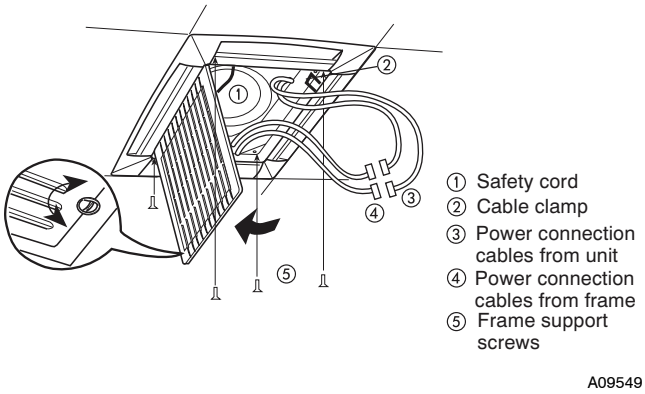

Fig. 36 - Fix Frame in Position

   e. Ensure that the frame is not distorted by excessive tightening, that it is aligned with false ceiling and that there is seal between the air inlet and outlet. See Fig. 37.

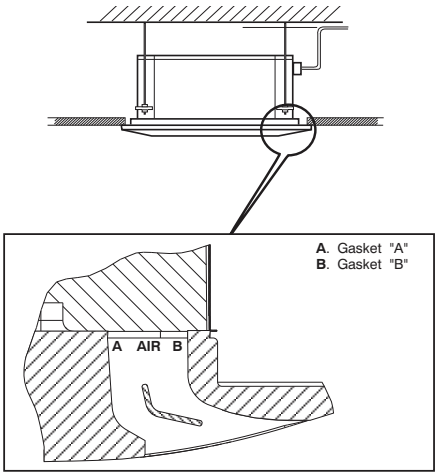

Fig. 37 - Gasket Location

NOTE: **Gasket "A" prevents return air from mixing with the supply air and gasket "B" prevents the supply air from leaking into the ceiling void. Once the unit is mounted in the ceiling, the gap between the unit frame and false ceiling must not be more than 3/16 in. wide.**

INSTALLATION OPTIONS

The 40KMC,KMQ units can be used to cool an adjacent room or for fresh-air ventilation. Plan the installation carefully. Measure carefully and follow acceptable building practices and the National Electric Code (NEC).

Fresh Air Intake

1. Using Fig. 38, locate and remove the factory-installed insulation from the side of the unit where the pre-punched knockouts are located.
2. Remove the pre-punched knockouts for fresh air intake. Refer to Fig. 38. Be careful not to damage internal parts such as the heat exchanger coil.
3. If installing a 40KMC018 unit, install baffle. Refer to Fig. 38.
4. Install ductwork using field-supplied, insulated flex duct, or insulated sheet metal suitable for working temperatures up to 140°F (60°C). Conduits can be of flexible polyester (with spiral core) or corrugated aluminum, externally covered with anti-condensate material (fiberglass from 1/4 in. to 1 in. thickness).
5. Use Fig. 39 to determine the allowable static pressure loss for the ductwork airflow. The ductwork design must not exceed this value or the job airflow requirements will not be met.

IMPORTANT: **Ventilated air must not exceed 10% of the total airflow or problems with operation will result. If the ventilated air surpasses 10% of the total airflow, a field supplied primary air treatment system with separate deflectors is recommended.**

6. Use a field-supplied fan if airflow does not meet job requirements. The field-supplied fan motor for outside air intake must be controlled by a bipolar ON/OFF switch with safety fuses.
7. Install an air inlet grille with filter inspection port to prevent dust and dirt from entering and fouling the indoor unit heat exchanger. Filter installation also makes the installation of a duct closing damper during shutdown periods unnecessary.
8. All non-insulated ducts must be covered with anti-condensate insulation (such as expanded neoprene, 1/4 in. thickness).

Conditioned Air Supply to Adjacent Room — Air supply to an adjacent room requires that the outlet corresponding with the duct is closed, using the air supply outlet obstruction accessory kit.

NOTE: The accessory kit cannot be used in units equipped with an electric heater.

An air inlet grille must be fitted (if possible near the floor) between the air conditioned room (where the unit is situated) and the adjacent room or, alternatively, the door must be undercut, as shown in Fig. 38. The duct lengths can be calculated in accordance with Fig. 39, also taking into account the pressure drop through air diffusers and fresh air filters.

IMPORTANT: **DO NOT use active carbon or electrostatic filter kits for ducts towards adjacent rooms.**

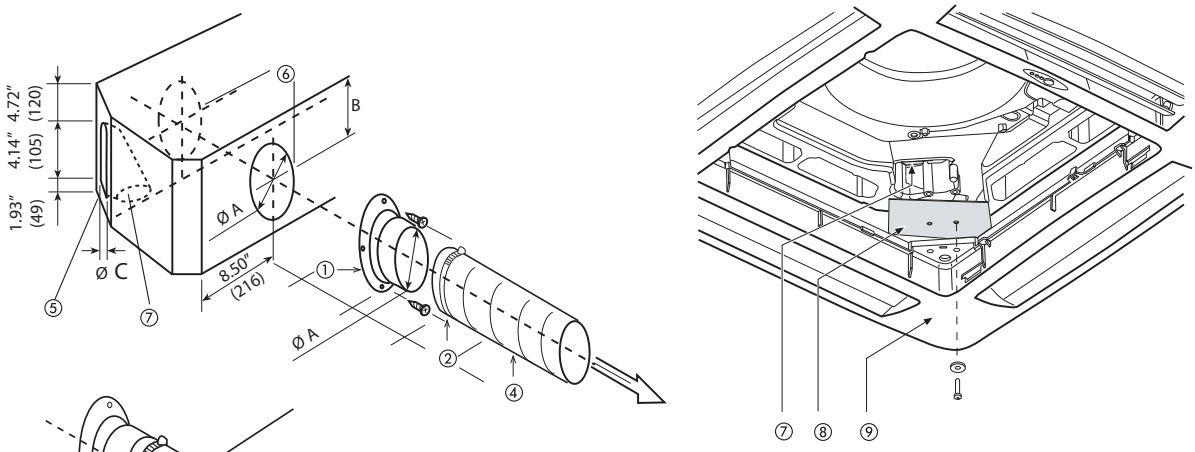

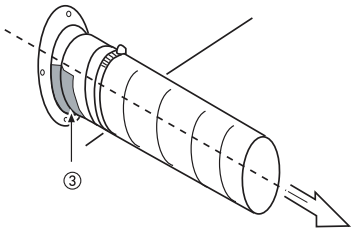

Unit	40KMC018	40KMC024, 03036 40KMQ01824, 03036
Ø A	5-29/32"(150 mm)	5-29/32"(150 mm)
B	4-3/4"(120 mm)	4-3/4"(120 mm)
Ø C	2-3/4"(70 mm)	3-15/16"(100 mm)

① Duct connection flange
② Clip
③ 1/4" (6 mm) neoprene gasket
④ Insulated flexible duct
⑤ Fresh air intake
⑥ Conditioned air supply to an adjacent room
⑦ Polystyrene partition
⑧ Baffle (40KMC018 Only)
⑨ Frame

NOTE: Dimensions in ( ) are in mm.

Air intake grille

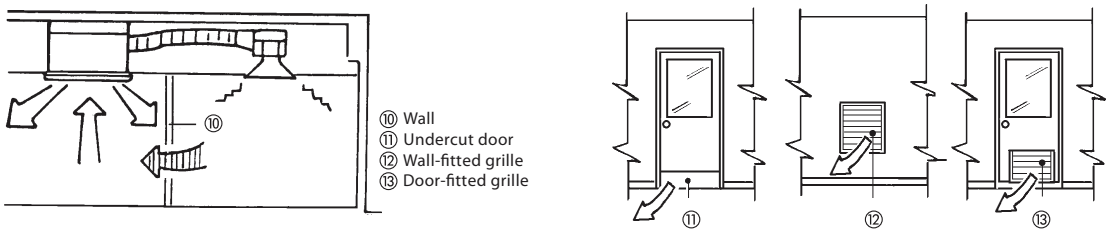

A09551

Fig. 38 - Installation Options

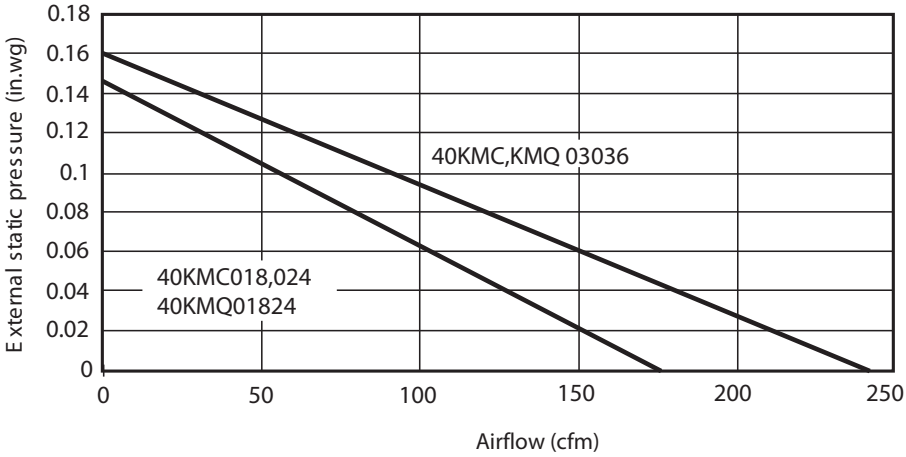

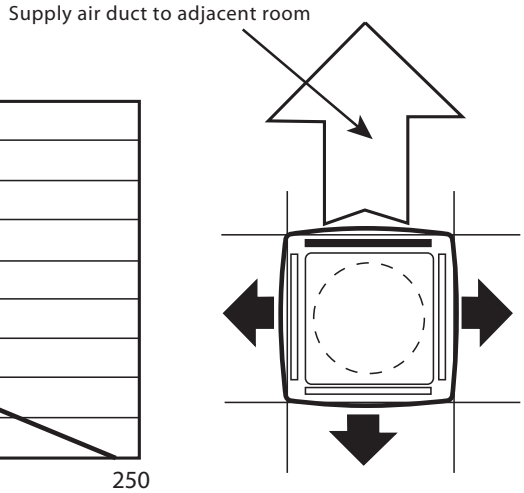

NOTE: When two louvers are closed, the fresh airflow towards the adjacent room is 50% higher than when one louver is closed (with equal static external pressure).

A07178a

Fig. 39 - Pressure Drop for Conditioned Air Supply to an Adjacent Room (one louver closed)

START-UP

Preliminary Checks

1. Make sure all wiring connections are correct and they are tight.
2. Field electrical power source must agree with unit name plate rating.
3. Check that all barriers, covers, and panels are in place. Ensure that the filters and return-air grilles on the indoor unit have been installed and that the discharge louvers are positioned correctly.
4. All service valves must be closed.
5. On units with crankcase heaters, ensure belly-band heaters are tight around the compressor.

Evacuate and Dehydrate the System

⚠ CAUTION

UNIT DAMAGE HAZARD

Failure to follow this caution may result in equipment damage or improper operation.

Never use the system compressor as a vacuum pump.

Refrigerant tubes and indoor coil should be evacuated using the recommended deep vacuum method of 500 microns. the alternate triple evacuation method may be used if the procedure outlined below is followed. Always break a vacuum with dry nitrogen.

Using Vacuum Pump

1. Completely tighten flare nuts A, B, C, D, connect manifold gage charge hose to a charge port of the low side service valve. (See Fig. 40.)
2. Connect charge hose to vacuum pump.
3. Fully open the low side of manifold gage. (See Fig. 41)
4. Start vacuum pump
5. Evacuate using either deep vacuum or triple evacuation method.
6. After evacuation is complete, fully close the low side of manifold gage and stop operation of vacuum pump.
7. The factory charge contained in the outdoor unit is good for up to 25 ft. (8 m) of line length. For refrigerant lines longer than 25 ft (8 m), add 0.3 oz. per foot of extra piping up to the maximum allowable length.
8. Disconnect charge hose from charge connection of the low side service valve.
9. Fully open service valves B and A.
10. Securely tighten caps of service valves.

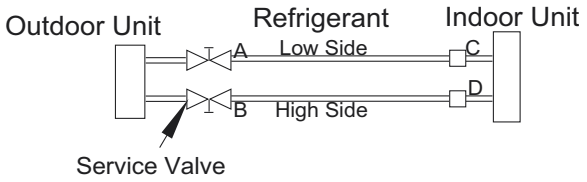

A07360

Fig. 40 - Service Valve

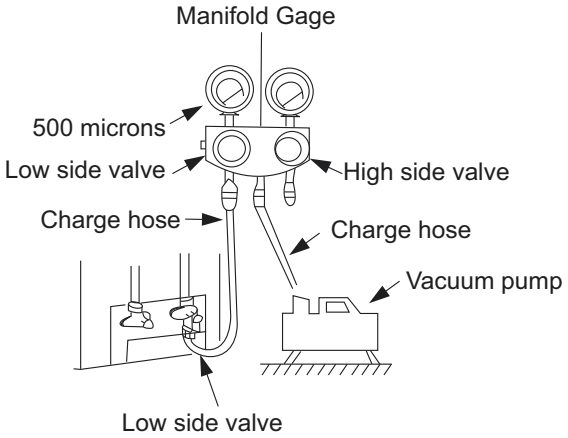

A07361

Fig. 41 - Manifold

Deep Vacuum Method

The deep vacuum method requires a vacuum pump capable of pulling a vacuum of 500 microns and a vacuum gage capable of accurately measuring this vacuum depth. The deep vacuum method is the most positive way of assuring a system is free of air and liquid water. (See Fig. 42)

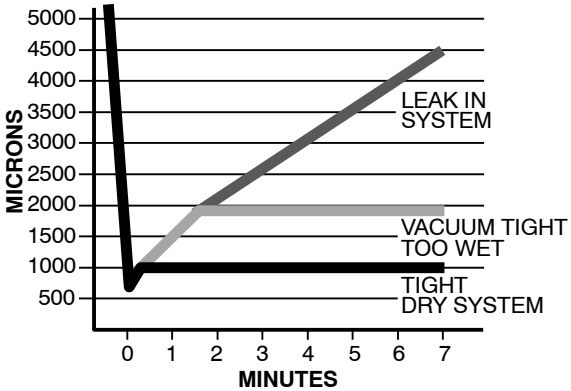

A95424

Fig. 42 - Deep Vacuum Graph

Triple Evacuation Method

The triple evacuation method should only be used when vacuum pump is only capable of pumping down to 28 in. of mercury vacuum and system does not contain any liquid water.

Refer to Fig. 43 and proceed as follows:

1. Pump system down to 28 in. of mercury and allow pump to continue operating for an additional 15 minutes.
2. Close service valves and shut off vacuum pump.
3. Connect a nitrogen cylinder and regulator to system and open until system pressure is 2 psig.
4. Close service valve and allow system to stand for 1 hr. During this time, dry nitrogen will be able to diffuse throughout the system absorbing moisture.
5. Repeat this procedure as indicated in Fig. 43. System will then be free of any contaminants and water vapor.

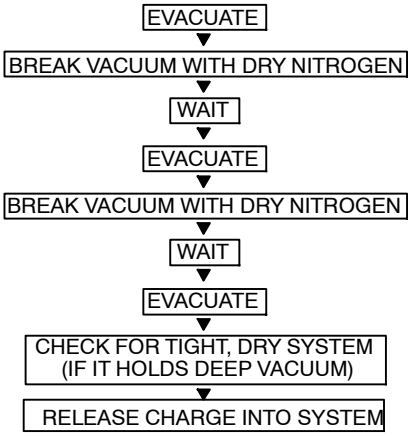

A95425

Fig. 43 - Triple Evacuation Method

To Start the Unit:

1. If the outdoor unit is equipped with a crankcase heater, turn on the indoor and outdoor disconnect switches to supply power the system 12 hours before starting the system.
2. Release charge into the system by opening (back-seating) liquid and suction line service valves.
3. Set the wireless remote control or wired remote control below ambient temperature. Operate the unit for 15 minutes.
4. Refer to Table 6 to determine if additional charge is required. Also, if you have a long line application, refer to the Duct Free Long Line Application Guide to determine the additional charge that is required beyond 25 ft (7.6 m).
5. Calculate the total additional charge required and weigh in.
6. Charge should be added as liquid (not gas) slowly and carefully to low side to avoid liquid slugging.
7. Start unit with operation test. In test mode the unit will run in cooling and heating (on heat pumps) regardless if there is demand or not.

Set Unit in Test Mode Using Wireless Remote

Turn power on to the unit. Insert batteries in remote control. Press the ∧ and the buttons on the remote control for 5 seconds. The remote control will be cleared and the time segment will display the Src1=service test mode. Press the button to transmit the service test signal to the unit. After the test has completed press the button to leave the test menu.

NOTE: When 30 seconds have elapsed and no buttons have been pressed, the remote control will automatically exit the test menu and resume its normal operation.

Set Unit in Test Mode Using Wired Control

There is a hidden service test mode that is initiated through a combination of button presses when the remote is off. The following combination must be pressed within a 6 second period:

"DOWN-FAN-UP-FAN-MODE"

Once in service test mode, the service test mode message will be sent and "Sr" will be displayed in the temperature icons until the "DOWN" button is pressed.

During Service Test mode, all the icons are off. the only button that is active is the "DOWN" button.

To cancel Service Test mode, press the "DOWN" button to send a normal message with "OFF" mode.

Service Test mode automatically times out after 30 minutes and the remote will operate normally.

Test Mode Sequence of Operation

Once unit is in TEST MODE, all remote control messages are ignored except for a message to turn the unit OFF. Buzzer will beep twice.

When in TEST MODE, the unit will operate as follows:

- The unit Status (Green) and Timer (Yellow) LEDs will blink every 2 seconds (see Fig. 45).
- Indoor fan will operate according to user – selected speed. If Auto fan is selected, the fan will run in High speed
- Cooling only system
  - — Unit will operate in cool mode with demand
  - — Louver will operate according to user - selected position or in cool position if louvers are set to Auto
- Heat pump system
  - — Unit will run in cooling mode with demand for 3 minutes
  - — Unit will run in heat pump mode with demand for 2 minutes or until indoor coil temperature is greater than 104°F (40°C). If coil temperature reaches 104°F (40°C), the unit will run in cool mode until test mode is exited.
  - — Louver will operate according to user - selected position or in cool/heat position if louvers are set to Auto.
- Following will cancel Test Mode:
  - — Unit is turned off by controller
  - — Power is cycled during Test Mode
  - — 30 minutes elapsed
  - — Fail Mode

8. Visually check that the condensate is being discharged from the unit. If the unit is running in heating mode, the condensate needs to be checked and the following needs to be performed:
   a. Remove grille and frame from the unit.
   b. On the opposite side of the drain connection, insert a water bottle up into the fan coil unit and fill drain pan. See Fig. 44. Water must flow regularly with condensate pump energized. If not, check the pipe slope or see f there are any pipe restrictions.
   NOTE: The unit is equipped with a safety float switch to de-energize the compressor if the drain pan water level gets too high.

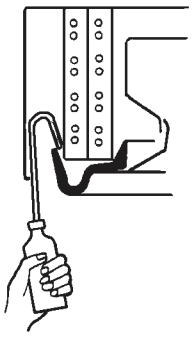

A09552

Fig. 44 - Inserting Water Into Drain Pan

⚠ CAUTION

PERSONAL INJURY AND/OR UNIT DAMAGE HAZARD

Failure to follow this caution may result in personal injury and/or equipment damage or improper operation.

Never operate unit without a filter or with grille removed.

SERVICE AND MAINTENANCE

⚠ WARNING

ELECTRICAL SHOCK HAZARD

Failure to follow this warning could result in personal injury or death.

Before installing, modifying, or servicing system, main electrical disconnect switch must be in the OFF position. There may be more than 1 disconnect switch. Lock out and tag switch with a suitable warning label.

Remove unit grille, filter, and condensate pan for cleaning, lubricating, or replacing parts.

Minimum Maintenance

1. Check, clean, or replace air filter each month or as required.
2. Check cooling coil, drain pan, condensate trap, and condensate drain pan each cooling season for cleanliness. Clean as necessary.
3. Check fan motor and wheel for cleanliness each heating and cooling season.
4. Check electrical connections for tightness and controls for proper operation each heating and cooling season. Service as necessary.

Service

TO CLEAN OR REPLACE AIR FILTERS

1. Place a plastic sheet on the floor to catch any water that may spill from drain pan.
2. Slide filter out.
3. Vacuum clean or wash filter with soapy water. Rinse and let air dry. If filter needs replacing, filters are available from a local dealer.

⚠ CAUTION

UNIT DAMAGE HAZARD

Failure to follow this caution may result in equipment damage or improper operation.

Operating the system with dirty air filters may damage the indoor unit and can cause reduced cooling performance, intermittent system operation, frost build-up on the indoor coil, and blown fuses. Inspect and clean or replace the air filters monthly.

TO CLEAN OR REPLACE DRAIN PAN

1. Place a plastic sheet on the floor to catch any water that may spill from drain pan.
2. Remove the air intake and distribution assembly. Remove the condensate water in the drain pan by pulling out the rubber drain plug and letting water drain into a 3-gallon bucket.

⚠ CAUTION

UNIT DAMAGE HAZARD

Failure to follow this caution may result in personal injury and/or equipment damage or improper operation.

Do not use a screw driver to pry drain pan out of assembly.

3. Remove screws holding the drain pan. Carefully hold the drain pan to remove it from the assembly.
4. Re-install the drain pan using the appropriate number of screws. Center and align the metal fan inlet orifice with the fan. Ensure the fan spins freely.

TROUBLESHOOTING

FAULT CODE — Once a failure occurs with the indoor unit in operation, the green LED on the indoor unit flashes at intervals of 0.5 seconds. The fault code is deduced from the number of times the green LED flashes, blocking unit operation.

Table 14 – Green LED (Indoor Unit Fault)

CODE	DESCRIPTION
3	Room air sensor fault
4	Indoor unit coil sensor fault
14	Outdoor unit air sensor fault

USING THE EMERGENCY BUTTON — The Emergency button is for use by a qualified service technician only. The Emergency button is for use when the room controller is inoperative. Use a screwdriver to press the emergency button through the metal protection grille. See Fig. 45.

Emergency Operation — When the unit is in the OFF mode and the Emergency button is pressed for 5 seconds, the unit will operate as follows:

- Automatic mode
- Temperature preset to 72°F (22.2°C)
- Automatic fan speed
- Louvers set automatically according to the operating mode
- Timer function is cancelled
- Buzzer beeps

When the unit is ON and the Emergency button is pressed for 5 seconds, the unit will operate as follows:

- The unit is turned off
- Buzzer beeps

When a signal is received by the remote control, the unit operates accordingly.

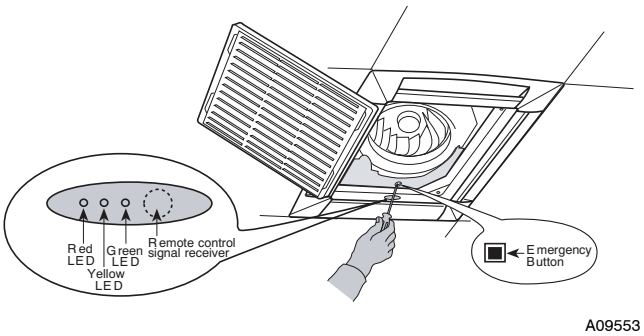

Fig. 45 - Warning Lamps and Emergency Button

Table 15 – Troubleshooting

PROBLEM	POSSIBLE CAUSE	SOLUTION
Compressor and Fan of the Outdoor Unit Will Not Start	Unit not energized	Check the main power connection.
	Main switch is set to OFF	Check and put it to ON position.
	Main switch fuses are blown	Replace fuses.
	Compressor cycling protection is on	Wait for 3 minutes.
	Main power voltage is too low	Check and set to the correct voltage.
	Electrical connections are too loose or are wrong	Check and tighten or correct connections.
Compressor Will Not Start, But Outdoor Fan is Operating	Electrical connections of compressor are loose or wrong	Check and tighten or repair compressor.
Compressor Stops Due to Over–temperature	Compressor burnt out; seized or protection device on	Check for the cause and replace compressor if necessary.
	Wrong refrigerant charge in unit (excessive or low) or air or other non–condensable gasses in the circuit	Drain refrigerant, evacuate and recharge. **CAUTION**: Do not vent refrigerant to the atmosphere; use refrigerant recovery equipment.
	Main voltage is too high or too low	Check voltage setting and adjust if necessary.
	Condenser coil obstructed	Remove obstruction.
	Outdoor fan off	Check cause and resume operation or repair.
	Wrong indoor unit thermistors	Replace thermistors.
	Refrigerant circuit clogged	Check and remove obstructions.
	Reversing valve faulty on heat pump models	Replace reversing valve.
	Expansion device clogged or covered with ice	Drain refrigerant, evacuate and recharge. **CAUTION**: Do not vent refrigerant to the atmosphere; use refrigerant recovery equipment.
Compressor Runs Continuously	Unit selected is too small for application requirements	Contact a qualified service technician for a system evaluation.
	Indoor temperature setting too low or too high	Check temperature setting.
	Outdoor unit fan faulty	Replace outdoor fan.
	Air or other non–condensable gasses in the circuit	Drain refrigerant, evacuate and recharge. **CAUTION**: Do not vent refrigerant to the atmosphere; use refrigerant recovery equipment.
	Obstructions at air intake or dirty indoor unit filters	Remove obstruction and/or clean filter.
Frequent Ice–Build–Up on Outdoor Coil	Outdoor fan is stopped	Check cause and repair.
Discharge Pressure Too High	Outdoor coil dirty or obstructed	Clean or remove obstructions.
	Condenser fan faulty	Replace condenser fan.
	Indoor temperature setting too low or too high	Check temperature setting.
	Air or other non–condensable gasses in the circuit	Drain refrigerant, evacuate and recharge. **CAUTION**: Do not vent refrigerant to the atmosphere; use refrigerant recovery equipment.
Discharge Pressure Too Low	Indoor temperature setting too high or too low	Check temperature setting.
	Outdoor coil dirty or obstructed	Clean or remove obstructions.
	Indoor unit air filter dirty	Clean filter.
Suction Pressure Too High	Indoor temperature setting too high or too low	Check temperature setting.
	Reversing valve faulty or internal leak	Replace reversing valve.
Suction Pressure Too Low	Indoor temperature setting too high or too low	Check temperature setting.
	Evaporator coil covered with ice	Air circulation on the evaporator not sufficient; check and repair.
	Expansion device or suction line clogged	Check and repair.
	Outdoor fan does not stop during defrost periods	Check electrical parts.
Outdoor Fan Cycling Due to Over–Temperature Protection	Electrical connection loose	Check connections.
	Fan motor burn out	Replace.
	Fan bearing seized	Check and repair.
	Expansion device clogged or covered with ice	Drain refrigerant, evacuate and replace. **CAUTION:** Do not vent refrigerant to the atmosphere; use refrigerant recovery equipment.

Copyright 2009 Carrier Corp. • 7310 W. Morris St. • Indianapolis, IN 46231
Printed in U.S.A. Edition Date: 09/09

Catalog No: 40KMC–Q–2SI

Manufacturer reserves the right to change, at any time, specifications and designs without notice and without obligations.

Replaces: 40KM–1SI