48EZ
Single-Packaged Hybrid Heat™ System with Puron® (R-410A) Refrigerant
Single- And Three-Phase Units
2 to 5 Nominal Tons (Sizes 024-060)

Carrier®
Turn to the Experts.℠

Product Data

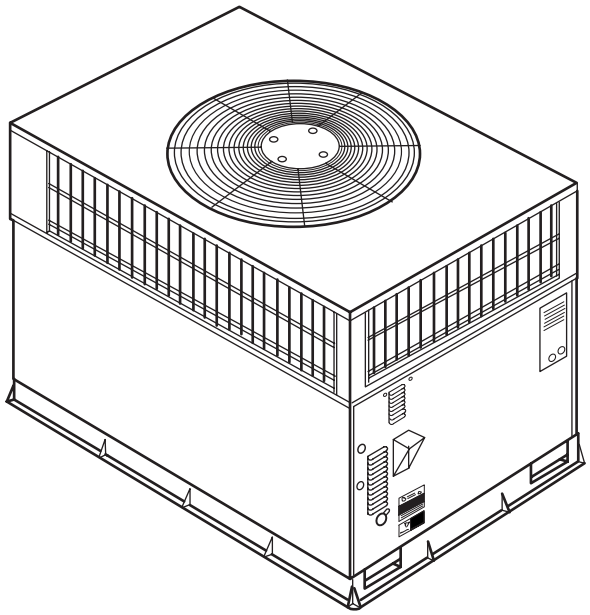

A99338

Unit 48EZ

Single-Packaged Products with Energy-Saving Features and Puron® refrigerant.

- 13 SEER
- Up to 8.0 HSPF
- Up to 81% AFUE
- Factory-Installed TXV
- Variable Speed Blower-Standard
- Direct Spark Ignition
- Low Sound Levels

FEATURES/BENEFITS

One-piece heating and cooling units with low sound levels, easy installation, low maintenance, and dependable performance.

Puron Environmentally Sound Refrigerant is Carrier's unique refrigerant designed to help protect the environment. Puron is an HFC refrigerant which does not contain chlorine that can harm the ozone layer. The most important advantage of Puron refrigerant is that it has not been banned in future air conditioning systems as the traditional refrigerant R-22 has been. Puron refrigerant is in service in over 100,000 systems proving highly reliable, environmentally sound performance.

Comfort Heat Pump™ Technology with Ideal Humidity™ featuring Variable Speed Blower motors provides better comfort and energy efficiency. You can expect up to 30 times better dehumidification; economical constant fan for less than $50 a year, which provides improved indoor air quality and more even temperatures from room to room; and reduced indoor noise due to lower air velocity. In addition, you'll realize improved installation flexibility with 3 different airflow choices for best overall comfort.

Easy Installation

Factory-assembled package is a compact, fully self-contained, combination gas heating/electric heating and cooling unit that is prewired, pre-piped, and pre-charged for minimum installation expense. These units are available in a variety of standard and optional heating/cooling size combinations with voltage options to meet residential and light commercial requirements. Units are lightweight and install easily on a rooftop or at ground level. The high tech composite base eliminates rust problems associated with ground level applications.

Convertible duct configuration

Unit is designed for easy use in either downflow or horizontal applications. Each unit is easily converted from horizontal to downflow with the two standard duct covers.

Efficient operation High-efficiency design offers SEER (Seasonal Energy Efficiency Ratios) of 13.0, HSPF of up to 8.0 and AFUE (Annual Fuel Utilization Efficiency) ratings as high as 81%.

Energy-saving, direct spark ignition saves gas by operating only when the room thermostat calls for heating. Standard units are furnished with natural gas controls. A low-cost field installed kit for propane conversion is available for all units.

48EZN units are dedicated Low NOx units designed for California installations. These models meet the California maximum oxides of nitrogen (NOx) emissions requirement of 40 nanograms/joule or less as shipped from the factory and MUST be installed in California Air Quality Management Districts where a Low NOx rule exists. Low NOx option is available on single phase models only.

Durable, dependable components Compressors are designed for high efficiency. Each compressor is hermetically sealed against contamination to help promote longer life and dependable operation. Each compressor also has vibration isolation to provide quieter operation. All compressors have internal high pressure and overcurrent protection.

Monoport inshot burners produce precise air-to-gas mixture, which provides for clean and efficient combustion. The large monoport on the inshot (or injection type) burners seldom, if ever, re-

quires cleaning. All gas furnace components are accessible in one compartment.

Turbo-tubular™ heat exchangers are constructed of aluminized steel for corrosion resistance and optimum heat transfer for improved efficiency. The tubular design permits hot gases to make multiple passes across the path of the supply air.

In addition, dimples located on the heat exchanger walls force the hot gases to stay in close contact with the walls, improving heat transfer.

Direct-drive variable speed blower motor is standard on all 48EZ models. Direct-drive, PSC condenser-fan motors are designed to help reduce energy consumption and provide for cooling operation down to 55°F outdoor temperature. Motormaster® II low ambient kit is available as a field installed accessory.

Thermostat controls

In order for your dual-fuel product to operate as designed, you need to install either the Thermidistat control (TP-PRH) or the Programmable hybrid heat thermostat (TP-PRH). We recommend that you use the Thermidistat control to gain maximum benefit from the variable speed blower motor.

Thermostatic Expansion Valve - A hard shutoff, balance port TXV maintains a constant superheat at the evaporator exit (cooling cycle) resulting in higher overall system efficiency.

Refrigerant system is designed to provide dependability. Liquid filter driers are used to promote clean, unrestricted operation. Each unit leaves the factory with a full refrigerant charge. Refrigerant service connections make checking operating pressures easier.

High and Low Pressure Switches provide added reliability for the compressor.

Indoor and Outdoor coils are computer-designed for optimum heat transfer and efficiency. The indoor coil is fabricated from copper tube and aluminum fins and is located inside the unit for protection against damage. The outdoor coil is internally mounted on the top tier of the unit. Copper fin coils and pre-coated fin coils are available from the factory by special order. These coils are recommended in applications where aluminum fins are likely to be damaged due to corrosion. They are ideal for seacoast applications.

Low sound ratings ensure a quiet indoor and outdoor environment with sound ratings as low as 72dBA.

Easy to service cabinets provide easy single-panel accessibility to serviceable components during maintenance and installation. The base with integrated drain pan provides easy ground level installation with or without a mounting pad. Convenient rigging-holds are provided to manipulate the unit on the jobsite. A nesting feature ensures a positive basepan to roof curb seal when the unit is roof mounted. A convenient 3/4-in. wide perimeter flange makes frame mounting on a rooftop easy.

Standard metal duct covers with insulation come with the unit and cover the horizontal duct openings. These can be left in place if the units are converted to downflow.

Integrated Gas Control (IGC) board provides safe and efficient control of heating and simplifies trouble-shooting through its built-in diagnostic function.

Cabinets are constructed of heavyduty, phosphated, zinc-coated prepainted steel capable of withstanding 500 hours in salt spray. Interior surfaces of the evaporator/heat exchanger compartment are insulated with cleanable semi-rigid insulation board, which keeps the conditioned air from being affected by the outdoor ambient temperature and provides improved indoor air quality. (Conforms to American Society of Heating, Refrigeration and Air Conditioning Engineers No. 62P.) The sloped drain pan minimizes standing water in the drain. An external drain is provided.

Short-Cycling protection for the compressor is incorporated into our defrost control board ensuring a five minute delay (+/-2 minutes) before restarting compressor after shutdown for any reason.

TABLE OF CONTENTS

Features/Benefits 1–2
Model Number Nomenclature 3
ARI Capacities 4
Physical Data 5–6
Options and Accessories 7
Base Unit Dimensions 9–10
Accessory Dimensions 11
Selection Procedure 12
Performance Data 13–20
Typical Piping and Wiring 21
Application Data 22
Electrical Data 23
Typical Wiring Schematics 24–25
Controls 26
Guide Specifications 27–28

MODEL NUMBER NOMENCLATURE

48EZ – 024 040 3 1 1 – –

Type of Unit
48EZ – Single Packaged Gas Heating/Electric Heat Pump Unit

Low NOx Indicator
– Standard
N Low Nox

Nominal Cooling Capacity
024 – 2.0 Tons
030 – 2.5 Tons
036 – 3.0 Tons
042 – 3.5 Tons
048 – 4.0 Tons
060 – 5.0 Tons

Heat Input Size (Btuh)
040 – 40,000
060 – 60,000
090 – 90,000
115 – 115,000
130 – 130,000

Electrical Supply
3 – 208/230–1–60
5 – 208/230–3–60

Series

Packaging

Options

AD – Louver Grille
BT – AL evap, vinyl condenser
CC – AL evap, CU condenser
CU – CU evap & condenser
GS – Stainless Steel HX
TP – Base unit with tin plated indoor coil hairpins
TV – TP with vinyl coating on outdoor coil
TC – TP with AL indoor coil & CU/CU outdoor coil

See Price Page for full list of factory options.
Only used if ordering an option

LEGEND
AL – Aluminum
CU – Copper

ISO 9001:2000

ARI Standard 210/240
Unitary Air Conditioners

ARI* CAPACITIES

COOLING CAPACITIES AND EFFICIENCIES

UNIT 48EZ	NOMINAL TONS	STANDARD CFM	NET COOLING CAPACITIES (Btuh)	EER**	SEER†
024	2	770	24,000	11.0	13.0
030	2-1/2	960	28,800	11.0	13.0
036	3	1100	36,000	11.0	13.0
042	3-1/2	1450	41,000	11.0	13.0
048	4	1450	45,000	11.0	13.0
060	5	1710	57,000	11.0	13.0

HEAT PUMP HEATING CAPACITIES AND EFFICIENCIES

UNIT 48EZ	HIGH HEAT CAPACITY (Btuh) @ 47°F (8.3°C)	HIGH HEAT COP @ 47°F (8.3°C)	LOW HEAT CAPACITY (Btuh) @ 17°F (−8.3°C)	LOW HEAT COP @ 17°F (−8.3°C)	HSPF†
024	22,000	3.4	14,400	2.2	7.8
030	29,000	3.4	16,000	2.2	8.0
036	36,000	3.4	19,600	2.2	8.0
042	40,500	3.4	21,600	2.2	8.0
048	47,000	3.5	24,600	2.2	8.0
060	55,000	3.4	31,000	2.2	8.0

LEGEND
dBA–Sound Levels (decibels)
db—Dry Bulb
SEER—Seasonal Energy Efficiency Ratio
wb—Wet Bulb
COP–Coefficient of Performance
HSPF–Heating Season Performance Factor
* Air Conditioning & Refrigeration Institute.
**At "A" conditions–80°F (26.7°C) indoor db/67°F (19.4°C) indoor wb & 95°F (35°C) outdoor db.
† Rated in accordance with U.S. Government DOE Department of Energy) test procedures and/or ARI Standards 210/240–94.

Notes:
1. Ratings are net values, reflecting the effects of circulating fan heat. Ratings are based on:
Cooling Standard: 80°F (26.7°C) db, 67°F (19.4°C) wb indoor entering–air temperature and 95°F db outdoor entering–air temperature.
2. Before purchasing this appliance, read important energy cost and efficiency information available from your retailer.

GAS HEATING CAPACITIES AND EFFICIENCIES

UNIT 48EZ	HEATING INPUT (Btuh)	OUTPUT CAPACITY (Btuh)	TEMPERATURE RISE RANGE (°F)	AFUE (%)
024040 **030040**	40,000	32,000	20-50	80.1
030060 **036060** **042060**	60,000	47,000	35-65 25-55 25-55	78.4 78.7 78.7
036090 **042090** **048090** **060090**	90,000	72,000 72,000 71,000 71,000	40-70 40-70 25-55 25-55	79.9 79.9 78.5 78.6
048115 **060115**	115,000	93,000 (48EZ) 90,000 (48EZN)	35-65	81.1 (48EZ) 78.3 (48EZN)
048130 **060130**	130,000	104,000	40-70	80.3

LEGEND
AFUE—Annual Fuel Utilization Efficiency
NOTE: Before purchasing this appliance, read important energy cost and efficiency information available from your retailer.

PHYSICAL DATA

UNIT SIZE 48EZ	024040	030040	030060	036060	036090	042060	042090
NOMINAL CAPACITY –ton	2	2–1/2	2–1/2	3	3	3–1/2	3–1/2
OPERATING WEIGHT –lb.	365	365	365	403	403	455	455
OPERATING WEIGHT –kg	166	166	166	183	183	206	206
COMPRESSORS	Scroll						
Quantity	1						
REFRIGERANT (R–410A)							
Quantity –lb	7.5	8.0	8.0	9.5	9.5	10.8	10.8
Quantity –kg	3.4	3.6	3.6	4.3	4.3	4.9	4.9
REFRIGERANT METERING DEVICE	Indoor–TXV Outdoor–Accurater						
OUTDOOR ORIFICE –in. (qty)	0.035 (2)	0.035 (2)	0.035 (2)	0.038 (2)	0.038 (2)	0.038 (2)	0.038 (2)
OUTDOOR ORIFICE –mm	.89	.89	.89	.89	.89	.89	.89
OUTDOOR COIL							
Rows...Fins/in.	2...2	2...2	2...2	2...2	2...21	2...21	2...21
Face Area–sq ft	2.3	12.3	12.3	13.6	3.6	5.4	5.4
OUTDOOR FAN							
Nominal Cfm	2350	2350	2350	2350	2350	2800	2800
Diameter–in.	22	22	22	22	22	22	22
Diameter–mm	559	559	559	559	559	559	559
Motor Hp (Rpm)	1/8 (825)	1/8 (825)	1/8 (825)	1/8 (825)	1/8 (825)	1/8 (825)	1/8 (825)
INDOOR COIL							
Rows...Fins/in.	3...15	3...15	3...15	4...15	4...15	3...15	3...15
Face Area–sq ft	3.7	3.7	3.7	3.7	3.7	4.7	4.7
INDOOR BLOWER							
Nominal Airflow–Cfm	790	1000	1000	1100	1100	1400	1400
Size–in.	10x10	10x10	10x10	11x10	11x10	11x10	11x10
Size–mm	254x254	254x254	254x254	279x254	279x254	279x254	279x254
Motor –hp	1/2	1/2	1/2	3/4	3/4	3/4	3/4
FURNACE SECTION*							
Burner Orifice							
Natural Gas Qty...Drill Size	2...44	2...44	2...44	2...38	3...38	2...38	2...38
Propane GasQty...Drill Size	2...50	2...50	2...50	2...46	3...46	2...46	2...46
HIGH–PRESSURE SWITCH							
(psig) Cut–out	610 +/–15						
Reset (Auto)	420 +/–25						
LOSS–OF–CHARGE / LOW–PRESSURE SWITCH (Liquid Line) (psig)							
Cut–out	20 +/–5						
Reset (auto)	45 +/–10						
RETURN–AIR FILTERS (in.)† ‡ Throwaway	20x24x1	20x24x1	20x24x1	24x30x1	24x30x1	24x36x1	24x36x1

*Based on altitude of 0 to 2000 ft.

†Required filter sizes shown are based on the larger of the ARI (Air Conditioning and Refrigeration Institute) rated cooling airflow or the heating airflow velocity of 300 ft/minute for high–capacity type. Air filter pressure drop for non–standard filters must not exceed 0.08 in. wc.

‡ If using accessory filter rack refer to filter rack installation instructions for correct filter size and quantity.

PHYSICAL DATA (CONT)

UNIT SIZE 48EZ	048090	048115	048130	060090	060115	060130
NOMINAL CAPACITY –ton	4	4	4	5	5	5
OPERATING WEIGHT–(lb	493	493	493	529	529	529
OPERATING WEIGHT–kg	224	224	224	240	240	240
COMPRESSORS	Scroll					
Quantity	1					
REFRIGERANT (R–410A)						
Quantity –lb	11.5	11.5	11.5	14.0	14.0	14.0
Quantity–kg	5.2	5.2	5.2	6.4	6.4	6.4
REFRIGERANT METERING DEVICE	Indoor–TXV Outdoor–Accurater					
OUTDOOR ORIFICE–in.	0.038 (Left OD Coil) (.97 mm) 0.046 (Right OD Coil) (1.2 mm)			0.042 (Left OD Coil) (1.0 mm) 0.052 (Right OD Coil) (1.3 mm)		
OUTDOOR COIL						
Rows...Fins–in.	2...21	2...21	2...21	2...21 |	2...21	2...21
Face Area–sq ft	17.2	17.2	17.2	19.4	19.4	19.4
OUTDOOR FAN						
Nominal Cfm	3300	3300	3300	3300	3300	3300
Diameter–in.	22	22	22	22	22	22
Diameter–mm	559	559	559	559	559	559
Motor Hp–Rpm	1/4 (1100)	1/4 (1100)	1/4 (1100)	1/4 (1100)	1/4 (1100)	1/4 (1100)
INDOOR COIL						
Rows...Fins–in.	4...15	4...15	4...15	4...15	4...15	4...15
Face Area–sq ft	4.7	4.7	4.7	5.7	5.7	5.7
INDOOR BLOWER						
Nominal Airflow–Cfm	1450	1450	1450	1750	1750	1750
Size–in.	11x10	11x10	11x10	11x10	11x10	11x10
Size–mm	279x254	279x254	279x254	279x254	279x254	279x254
Motor –hp	3/4 (1075)	3/4 (1075)	3/4 (1075)	1.0 (1040)	1.0 (1040)	1.0 (1040)
FURNACE SECTION*						
Burner Orifice						
Natural Gas Qty...Drill Size	3...38	3...33	3...31	3...38	3...33	3...31
Propane GasQty...Drill Size	3...46	3...42	3...41	3...46	3...42	3...41
HIGH–PRESSURE SWITCH (psig)						
Cut–out	610 +/–15					
Reset (Auto)	420 +/–25					
LOSS–OF–CHARGE / LOW–PRESSURE SWITCH (Liquid Line) (psig)						
Cut–out	20 +/–5					
Reset (auto)	45 +/–10					
RETURN–AIR FILTERS (in.)† Throwaway	24x36x1	24x36x1	24x36x1	24x36x1	24x36x1	24x36x1

*Based on altitude of 0 to 2000 ft.

†Required filter sizes shown are based on the larger of the ARI (Air Conditioning and Refrigeration Institute) rated cooling airflow or the heating airflow velocity of 300 ft/minute for high–capacity type. Air filter pressure drop for non–standard filters must not exceed 0.08 in. wc.

‡ If using accessory filter rack refer to filter rack installation instructions for correct filter size and quantity.

OUTDOOR SOUND: OCTAVE BAND DATA-DECIBELS

UNIT	48EZ					
Capacity	024	030	036	042	048	060
Sound Rating* dBA	72	72	72	73	78	78
Frequency (Hz)	dB					
125	58.8	58.8	60.7	56.7	62.4	63.5
250	63.5	63.5	63.3	62.8	69.9	67.6
500	67.2	67.2	66.8	67.8	71.3	71.8
1000	66.9	66.9	66.5	67.4	73.4	75.5
2000	63.7	63.7	64.2	63.7	70.0	71.0
4000	58.3	58.3	60.3	57.7	66.3	68.1
8000	50.0	50.0	53.0	50.8	60.1	59.9

*Tested in accordance with ARI Standard 270–95 (not listed in ARI).

OPTIONS AND ACCESSORIES

Factory-installed options

Louver grille provides hail and vandalism protection. A wire grille is standard on all models. See model number nomenclature for louver grille options.

Coil options include copper/copper and vinyl-coated construction for refrigerant coils. Units are shipped standard with copper tube/aluminum fin construction. See model number nomenclature for coil options.

Field-installed accessories

Economizer with Solid-State Controls and Barometric Relief Dampers
Manual Air Damper (25% open)
Filter Rack
Flat Roof Curbs (8-in. and 14-in.)
Square-to-Round Duct Transition Kit
Thermostats
Controls Upgrade Kit
Crankcase Heater
Compressor Hard Start Kit (for use on single-phase units only)
Natural to Propane Gas Conversion Kit (0-2000 ft)
High Altitude Propane Conversion Kit
Rigging Kit
Low Ambient Kit (Motormaster® II Control)
Solid-State Time Guard® II Device
Propane to Natural Gas Conversion Kit (0-2000 ft)

Economizer with solid-state controls and barometric relief dampers includes filter racks and provide outdoor air during cooling and reduce compressor operation.

Manual outside air damper includes hood and filter rack with adjustable damper blade for up to 25% outdoor air.

Flat roof curbs in both 8 in. and 14 in. sizes are available for roof mounted applications.

Square-to-round duct transition kit enables 024-048 size units to be fitted to 14 in. round ductwork.

Compressor hard start kit assists compressor start-up by providing additional starting torque on single phase units and prolongs compressor motor life.

Corporate Thermostats provide control for the system heating and cooling functions. Thermostat models are available in both programmable and non-programmable versions.

Controls upgrade kit supplies high and low pressure safety protection and protects the unit from operating in unsuitable conditions.

Crankcase heater provides anti-floodback protection for low-load cooling applications.

Natural to propane gas conversion kit allows for conversion from natural gas to propane gas (0-2000 ft).

Rigging kit includes lifting brackets which are inserted into the unit base rigging holds to lift unit for rooftop applications.

Low-ambient kit (Motormaster II control) allows the use of mechanical cooling down to outdoor temperatures as low as 0°F when properly installed.

Solid-state Time Guard II device provides short-cycling protection for the compressor. Not required with corporate electronic thermostats.

Filter rack features easy installation, serviceability, and high-filtering performance for vertical applications.

High altitude propane conversion kit is for use at 2001 to 6000 ft above sea level. Kit consists of natural gas orifices that compensate for gas heat operation at high altitude.

Propane to natural gas conversion kit allows for conversion from propane to natural gas for altitudes of 0-2000 ft.

ECONOMIZER

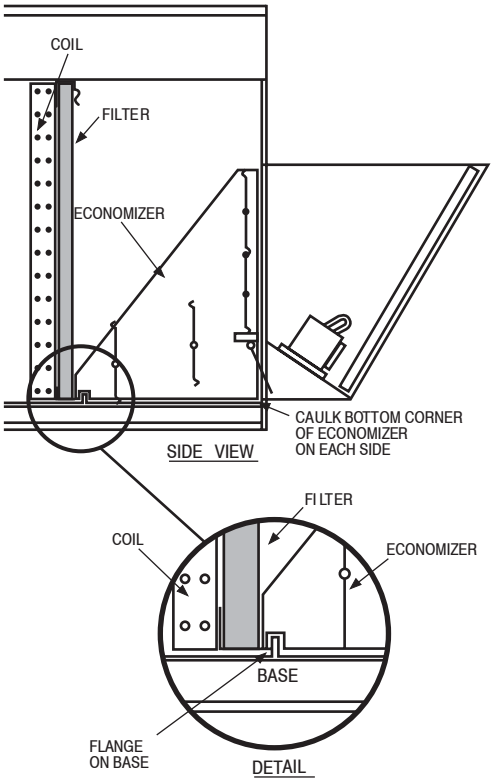

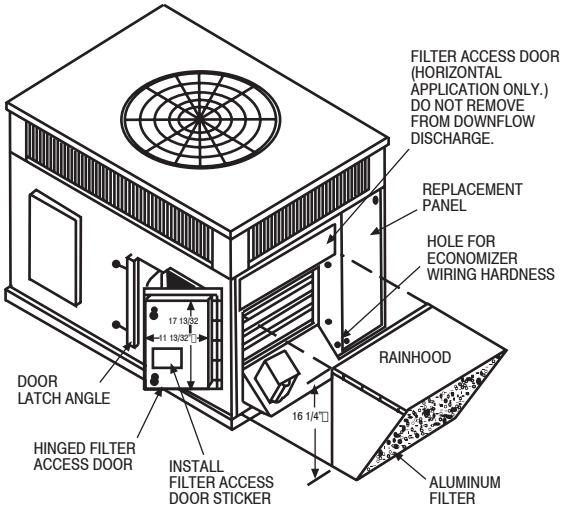

FILTER RACK

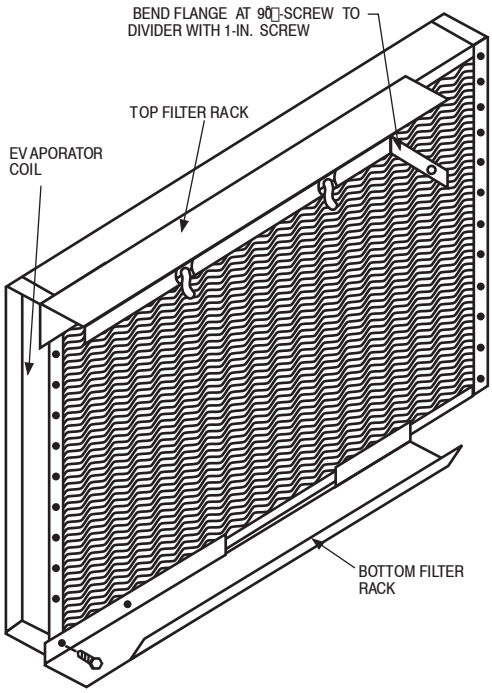

MANUAL OUTSIDE AIR DAMPER

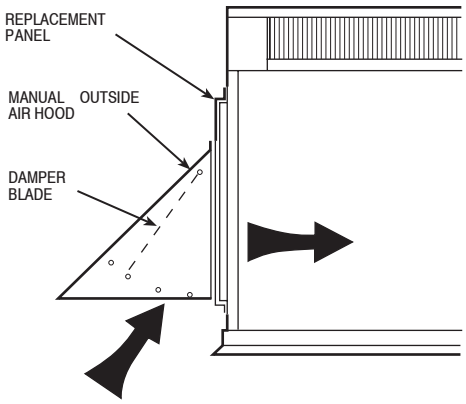

A05239

UNIT DIMENSIONS - 48EZ024-036

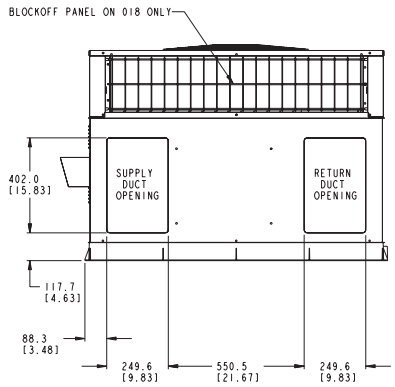

REAR VIEW

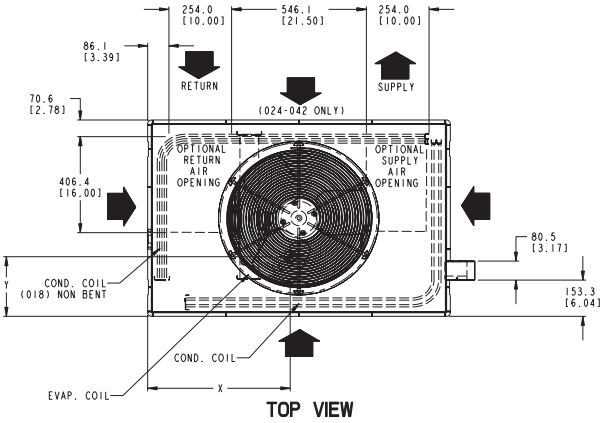

TOP VIEW

REQUIRED CLEARANCE TO COMBUSTIBLE MAT'L.
(Refer to Maximum Operating Clearances)

	INCHES [mm]
TOP OF UNIT	14.00 [355.6]
DUCT SIDE OF UNIT	2.00 [50.8]
SIDE OPPOSITE DUCTS	14.00 [355.6]
BOTTOM OF UNIT	0.50 [12.7]

NEC. REQUIRED CLEARANCES.

	INCHES [mm]
BETWEEN UNITS, POWER ENTRY SIDE	42.00 [1066.8]
UNIT AND UNGROUNDED SURFACES, POWER ENTRY SIDE	36.00 [914.0]
UNIT AND BLOCK OR CONCRETE WALLS AND OTHER GROUNDED SURFACES, POWER ENTRY SIDE	42.00 [1066.8]

REQUIRED CLEARANCE FOR OPERATION AND SERVICING

	INCHES [mm]
EVAP. COIL ACCESS SIDE	36.00 [914.0]
POWER ENTRY SIDE	42.00 [1066.8]
(EXCEPT FOR NEC REQUIREMENTS)	
UNIT TOP	48.00 [1219.2]
SIDE OPPOSITE DUCTS	36.00 [914.0]
DUCT PANEL	12.00 [304.8] *

*MINIMUM DISTANCES: IF UNIT IS PLACED LESS THAN 12.00 [304.8] FROM WALL SYSTEM, THEN SYSTEM PERFORMANCE MAYBE COMPROMISE.

LEGEND
CG - Center of Gravity
COND - Condensor
EVAP - Evaporator
NEC - National Electrical Code
REQ'D - Required

NOTE: Dimensions are in in. [mm]

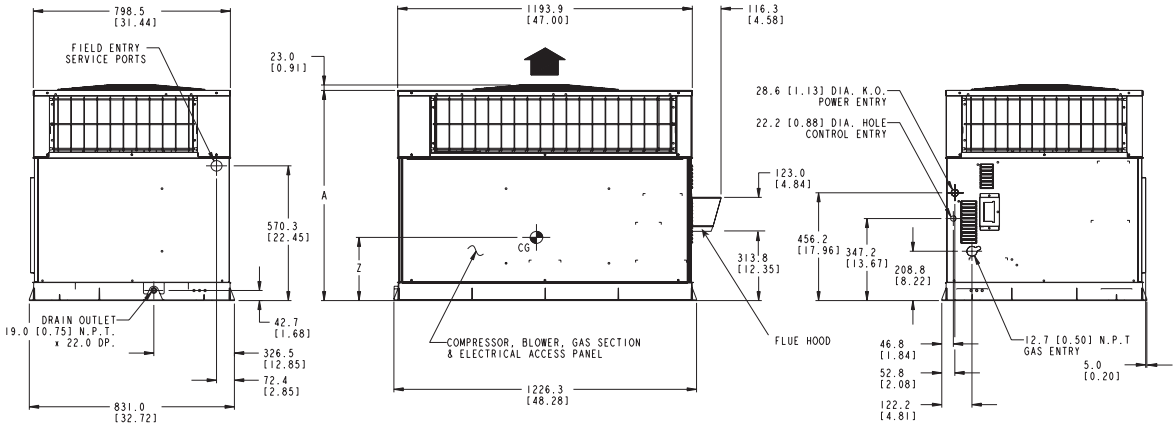

LEFT SIDE VIEW FRONT VIEW RIGHT SIDE VIEW

A05166

UNIT	ELECTRICAL CHARACTERISTICS	UNIT WEIGHT		UNIT HEIGHT IN. [MM] "A"	CENTER OF GRAVITY IN. [MM]		
		lb	kg		X	Y	Z
48EZ024-040	208/230-1-60	365	166	39.02[991.1]	20.0 [508]	19.3 [489]	17.6 [447]
48EZ030-040/060	208/230-1-60	365	166	39.02[991.1]	20.0 [508]	19.3 [489]	17.6 [447]
48EZ036-060/090	208/230-1-60, 208/230-3-60	403	183	41.02[1041.9]	20.0 [508]	14.0 [355.6]	13.0 [330.2]

UNIT DIMENSIONS - 48EZ042-060

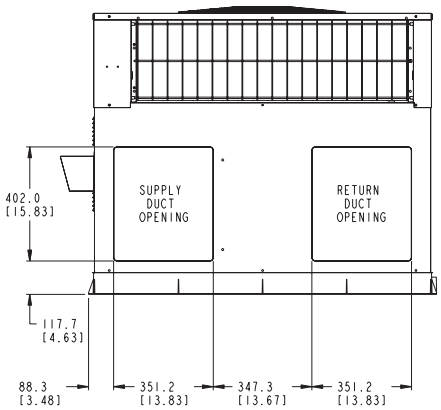

REAR VIEW

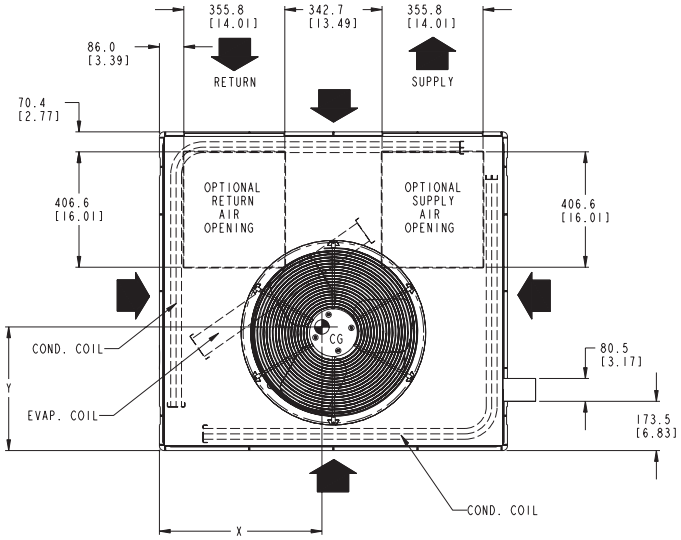

TOP VIEW

REQUIRED CLEARANCE TO COMBUSTIBLE MATL.

	INCHES [mm]
TOP OF UNIT	14.00 [355.6]
DUCT SIDE OF UNIT	2.00 [50.8]
SIDE OPPOSITE DUCTS	14.00 [355.6]
BOTTOM OF UNIT	0.50 [12.7]
ELECTRIC HEAT PANEL	36.00 [914.4]

NEC. REQUIRED CLEARANCES.

	INCHES [mm]
BETWEEN UNITS, POWER ENTRY SIDE	42.00 [1066.8]
UNIT AND UNGROUNDED SURFACES, POWER ENTRY SIDE	36.00 [914.0]
UNIT AND BLOCK OR CONCRETE WALLS AND OTHER GROUNDED SURFACES, POWER ENTRY SIDE	42.00 [1066.8]

REQUIRED CLEARANCE FOR OPERATION AND SERVICING

	INCHES [mm]
EVAP. COIL ACCESS SIDE	36.00 [914.0]
POWER ENTRY SIDE	42.00 [1066.8]
(EXCEPT FOR NEC REQUIREMENTS)	
UNIT TOP	48.00 [1219.2]
SIDE OPPOSITE DUCTS	36.00 [914.0]
DUCT PANEL	12.00 [304.8] *

*MINIMUM DISTANCES: IF UNIT IS PLACED LESS THAN 12.00 [304.8] FROM WALL SYSTEM, THEN SYSTEM PERFORMANCE MAYBE COMPROMISE.

LEGEND
CG - Center of Gravity
COND - Condensor
EVAP - Evaporator
NEC - National Electrical Code
REQ'D - Required

NOTE: Dimensions are in in. [mm]

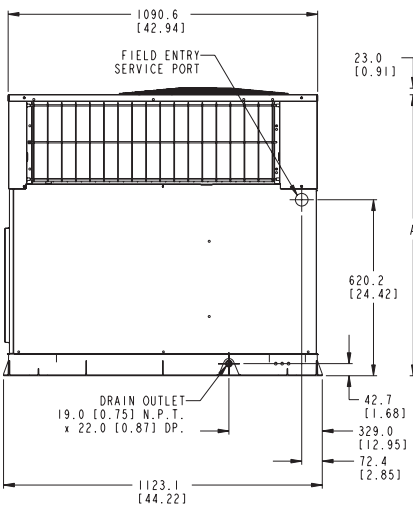

LEFT SIDE VIEW

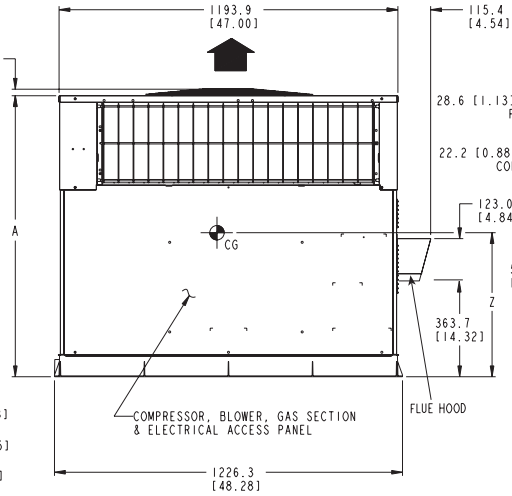

FRONT VIEW

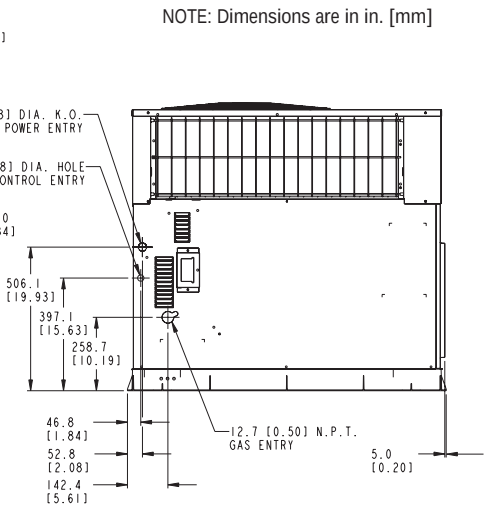

RIGHT SIDE VIEW

A05142

UNIT	ELECTRICAL CHARACTERISTICS	UNIT WEIGHT		UNIT HEIGHT IN. [MM] "A"	CENTER OF GRAVITY IN. [MM]		
		lb	kg		X	Y	Z
48EZ042-060/090	208/230-1-60, 208/230-3-60	455	207	42.98 [1091.7]	21.0 [533.4]	20.5 [520.7]	16.6 [421.6]
48EZ048-090/115/130	208/230-1-60, 208/230-3-60	493	224	44.98 [1142.5]	19.5 [495.3]	21.3 [539.8]	18.0 [457.2]
48EZ060-090/115/130	208/230-1-60, 208/230-3-60	529	240	46.98 [1193.3]	21.0 [533.4]	20.0 [508.0]	17.6 [447.0]

ACCESSORY DIMENSIONS

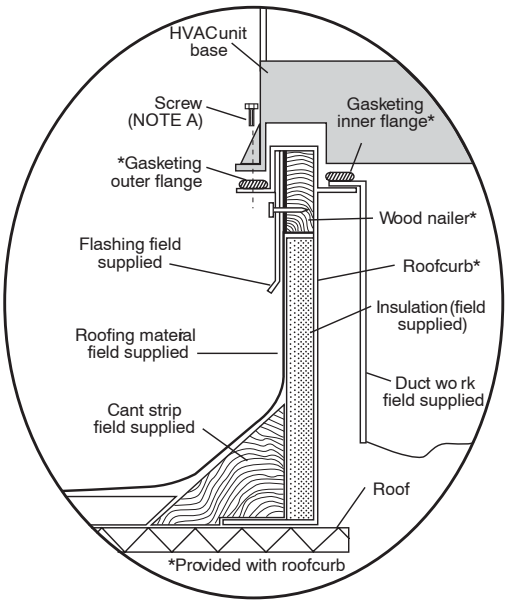

Roof Curb for Small Cabinet

Note A: When unit mounting screw is used retainer bracket must also be used.

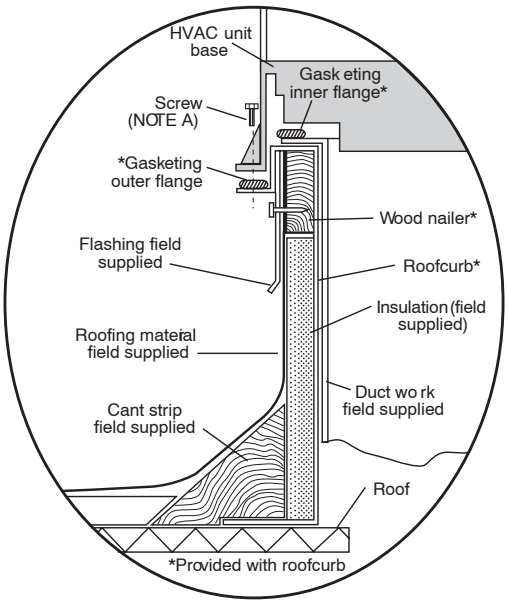

Roof Curb for Large Cabinet

Note A: When unit mounting screw is used retainer bracket must also be used.

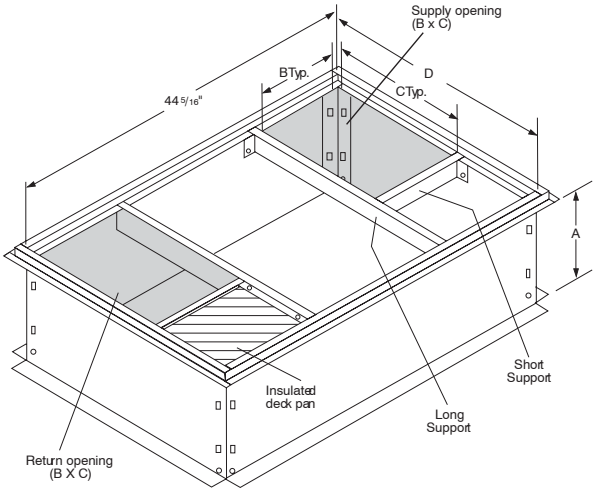

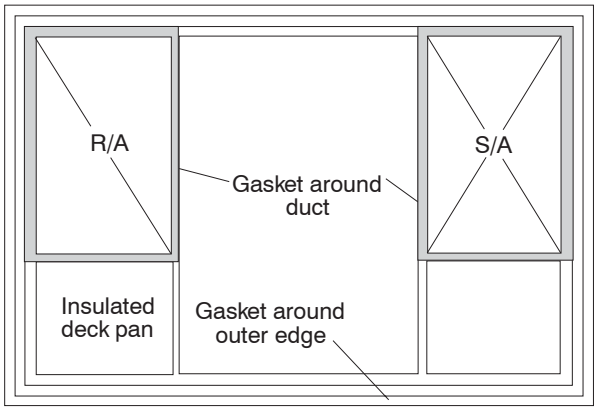

C00076

UNIT SIZE	ODS CATALOG NUMBER	A IN. (MM)	B IN. (MM)	C IN. (MM)	D IN. (MM)
48EZ024-036	CPRFCURB006A00	8 (203)	11 (279)	16-1/2 (419)	28-3/4 (730)
	CPRFCURB007A00	14 (356)	11 (279)	16-1/2 (419)	28-3/4 (730)
48EZ042-060	CPRFCURB008A00	8 (203)	16-3/16 (411)	17-3/8 (441)	40-1/4 (1022)
	CPRFCURB009A00	14 (356)	16-3/16 (411)	17-3/8 (441)	40-1/4 (1022)

NOTES:

1. Roof curb must be set up for unit being installed.
2. Seal strip must be applied, as required, to unit being installed.
3. Dimensions are in inches.
4. Dimension in ( ) are in millimeters.
5. Roof curb is made of 16-gauge steel.
6. Attach ductwork to curb (flanges of duct rest on curb).
7. Insulated panels: 1-in. thick fiberglass 1 lb. density.
8. When unit mounting screw is used (see Note A), a retainer bracket must be used as well. This bracket must also be used when required by code for hurricane or seismic conditions. This bracket is available through Micrometl.

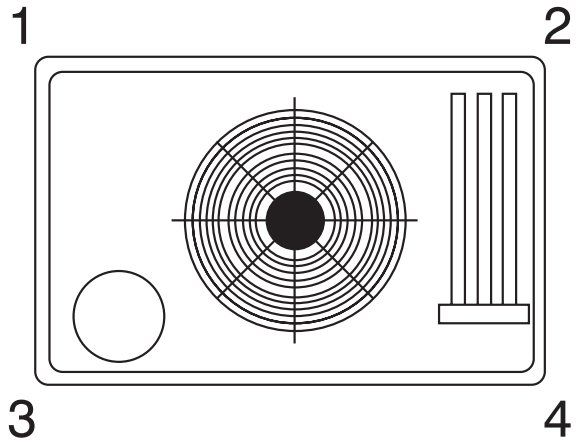

A07216

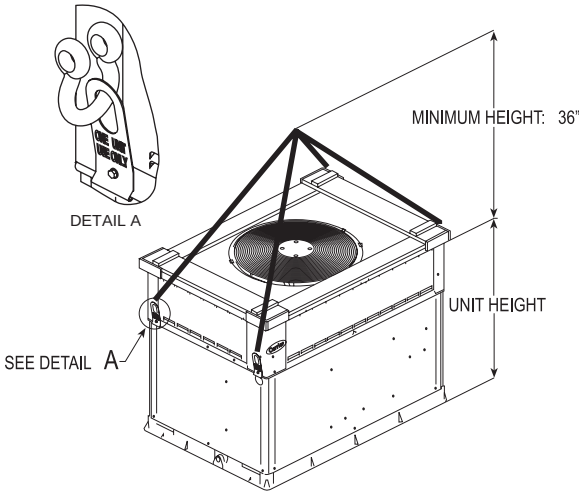

A05161

CORNER WEIGHTS (SMALL CABINET)							CORNER WEIGHTS (LARGE CABINET)						
Unit	024		030		036		Unit	042		048		060	
	lb	kg	lb	kg	lb	kg	Unit	lb	kg	lb	kg	lb	kg
Total Weight	365	166	365	166	403	183	Total Weight	455	206	493	224	529	240
Corner Weight 1	73	33	73	33	81	37	Corner Weight 1	91	41	99	45	106	48
Corner Weight 2	57	26	57	26	63	29	Corner Weight 2	71	32	77	35	82	37
Corner Weight 3	88	40	88	40	97	44	Corner Weight 3	110	50	119	54	128	58
Corner Weight 4	147	67	147	67	162	74	Corner Weight 4	183	83	198	90	213	97
Shipping Weight	387	176	387	176	425	193	Shipping Weight	477	216	515	234	551	249

SELECTION PROCEDURE (WITH EXAMPLE)

1. Determine cooling and heating requirements at design conditions:

Given:

Required Cooling Capacity (TC) . . . . . 34,500 Btuh
Sensible Heat Capacity (SHC) . . . . . 26,000 Btuh
Required Heating Capacity . . . . . 60,000 Btuh
Condenser Entering Air Temperature . . . . . 95°F
Indoor-Air Temperature . . . . . 80°F edb 67°F ewb
Evaporator Air Quantity . . . . . 1150 CFM
External Static Pressure . . . . . 0.200 in. wc
Electrical Characteristics 208-1-60

2. Select unit based on required cooling capacity.

Enter Net Cooling Capacities table at condenser entering temperature of 95°F. Unit 036 at 1225 cfm and 67°F ewb (entering wet bulb) will provide a total capacity of 36,500 Btuh and a SHC of 27,600 Btuh. Calculate SHC correction, if required, using Note 4 under Cooling Capacities tables.

3. Select heating capacity of unit to provide design condition requirement.

In the Heating Capacities and Efficiencies table, note that the unit 036090 will provide 72,000 Btuh with an input of 90,000 Btuh.

4. Determine fan speed and power requirements at design conditions.

Before entering the air delivery tables, calculate the total static pressure required. From the given example, the Wet Coil Pressure Drop Table, and the Filter Pressure Drop Table:

External Static Pressure	0.200 in. wc
Filter	0.130 in. wc
Wet Coil Pressure Drop	0.032 in. wc
Total Static Pressure	0.362 in. wc

Enter the table for Dry Coil Air Delivery—horizontal and downflow Discharge. At 0.362 ESP (external static pressure), in cooling the fan will deliver 1145 cfm with the NOM speed tap selected

5. Select unit that corresponds to power source available.

The Electrical Data Table shows that the unit is designed to operate at 208-1-60.

PERFORMANCE DATA - STANDARD ECM INDOOR MOTOR

Cooling Extended Performance Table

48EZ024 Cooling Performance Table													
Temp (F) Outdoor Air Entering Condenser		Evaporator Air—CFM/BF											
		800/0.026				900/0.032				1000/0.04			
		Evaporator Air — Ewb (F)											
		62	63*	67	72	62	63*	67	72	62	63*	67	72
75	TC	24.0	24.5	26.5	29.1	24.6	25.1	27.1	29.8	25.1	25.5	27.4	30.4
	SHC	21.9	21.3	18.7	15.4	23.5	22.8	19.8	16.1	25.0	24.2	20.8	16.7
	kW	1.7	1.7	1.8	1.8	1.8	1.8	1.8	1.8	1.8	1.8	1.8	1.9
85	TC	22.9	23.3	25.3	27.9	23.5	23.9	25.8	28.5	23.9	24.3	26.2	28.9
	SHC	21.4	20.7	18.1	14.9	22.9	22.2	19.2	15.6	24.3	23.6	20.3	16.2
	kW	1.9	1.9	2.0	2.0	2.0	2.0	2.0	2.0	2.0	2.0	2.1	2.1
95	TC	21.8	22.2	24.0	26.5	22.3	22.6	24.5	27.0	22.7	23.0	24.8	27.4
	SHC	20.8	20.2	17.6	14.3	22.3	21.6	18.7	15.0	23.6	22.9	19.7	15.6
	kW	2.2	2.2	2.2	2.2	2.2	2.2	2.2	2.2	2.2	2.2	2.3	2.3
105	TC	20.5	20.9	22.6	25.0	21.0	21.3	23.0	25.4	21.6	21.7	23.3	25.7
	SHC	20.2	19.5	16.9	13.7	21.6	20.9	18.0	14.3	22.5	22.2	19.0	14.9
	kW	2.4	2.4	2.4	2.4	2.4	2.4	2.5	2.5	2.5	2.5	2.5	2.5
115	TC	19.2	19.5	21.1	23.3	19.8	19.9	21.5	23.7	20.7	20.4	21.7	23.6
	SHC	19.4	18.8	16.3	13.0	20.6	20.2	17.3	13.7	21.5	21.2	18.3	14.1
	kW	2.7	2.7	2.7	2.7	2.7	2.7	2.7	2.7	2.7	2.7	2.8	2.8
125	TC	17.8	18.0	19.4	21.4	18.5	18.5	19.5	21.7	19.0	19.0	19.9	21.9
	SHC	18.5	18.1	15.5	12.3	19.2	19.2	16.5	12.9	19.8	19.7	17.6	13.5
	kW	2.9	2.9	3.0	3.0	3.0	3.0	3.0	3.0	3.0	3.0	3.1	3.1

48EZ

Heating Extended Performance Table -10-20

48EZ024																
Return Air (F db)	CFM (Standard Air)		Air Temperature Entering Outdoor Coil (F db at 70% rh)													
			-10		0		10		17		20					
60	800	TC	7.05	6.52	9.38	8.63	11.68	10.72	27.90	25.44	14.58	13.22				
		kW	1.49		1.56		1.63		1.69		1.71					
	900	TC	7.27	6.73	9.55	8.79	11.92	10.94	13.67	12.46	14.81	13.43				
		kW	1.51		1.57		1.64		1.69		1.70					
	1000	TC	7.44	6.88	9.74	8.96	12.11	11.11	13.90	12.67	15.02	13.62				
		kW	1.53		1.59		1.65		1.70		1.70					
70	800	TC	6.20	5.73	8.57	7.89	11.05	10.15	12.80	11.67	13.93	12.63				
		kW	1.63		1.71		1.80		1.86		1.88					
	900	TC	6.37	5.89	8.78	8.08	11.24	10.32	13.07	11.91	14.19	12.86				
		kW	1.65		1.72		1.80		1.86		1.88					
	1000	TC	6.56	6.07	8.98	8.26	11.49	10.55	13.28	12.10	14.43	13.08				
		kW	1.68		1.75		1.82		1.87		1.89					
80	800	TC	5.19	4.80	7.66	7.05	10.24	9.40	12.05	10.99	13.23	12.00				
		kW	1.77		1.87		1.97		2.04		2.06					
	900	TC	5.35	4.95	7.85	7.23	10.47	9.61	12.31	11.23	13.49	12.23				
		kW	1.79		1.88		1.98		2.04		2.06					
	1000	TC	5.53	5.12	8.06	7.41	10.70	9.82	12.55	11.44	13.71	12.44				
		kW	1.83		1.91		2.00		2.05		2.07					

Heating Extended Performance Table 30-20

48EZ024																
Return Air (F db)	CFM (Standard Air)		Air Temperature Entering Outdoor Coil (F db at 70% rh)													
			30		40		47		50		60					
60	800	TC	18.93	16.58	22.27	22.27	23.82	23.82	23.82	23.82	25.12	25.12				
		kW	1.77		1.80		1.79		1.79		1.81					
	900	TC	19.10	16.74	22.23	22.23	23.74	23.74	24.09	24.09	24.29	24.29				
		kW	1.75		1.77		1.76		1.77		1.76					
	1000	TC	19.27	16.89	21.64	21.64	23.46	23.46	23.61	23.61	23.83	23.83				
		kW	1.75		1.75		1.75		1.75		1.75					
70	800	TC	18.39	16.11	22.24	22.24	23.80	23.80	23.94	23.94	24.42	24.42				
		kW	1.95		1.99		1.99		1.99		1.99					
	900	TC	18.69	16.38	22.08	22.08	27.70	27.70	23.67	23.67	24.20	24.20				
		kW	1.93		1.97		2.09		1.96		1.96					
	1000	TC	18.86	16.53	21.85	21.85	23.43	23.43	23.40	23.40	24.27	24.27				
		kW	1.94		1.95		1.94		1.94		1.95					
80	800	TC	17.52	15.35	22.02	22.02	23.88	23.88	23.98	23.98	24.58	24.58				
		kW	2.14		2.20		2.21		2.21		2.22					
	900	TC	17.79	15.59	22.09	22.09	23.62	23.62	23.81	23.81	24.34	24.34				
		kW	2.11		2.17		2.17		2.17		2.18					
	1000	TC	18.17	15.92	21.92	21.92	23.55	23.55	23.73	23.73	24.38	24.38				
		kW	2.11		2.17		2.16		2.16		2.16					

*At 75°F entering dry bulb—Tennessee Valley Authority [TVA] rating conditions; all others at 80°F entering dry bulb. See Legend and Notes.

PERFORMANCE DATA (CONT)- STANDARD ECM INDOOR MOTOR

Cooling Extended Performance Table

48EZ030 Cooling Performance Table													
Temp (F) Outdoor Air Entering Condenser		Evaporator Air—CFM/BF											
		875/0.06				1000/0.07				1125/0.08			
		Evaporator Air — Ewb (F)											
		62	63*	67	72	62	63*	67	72	62	63*	67	72
75	TC	27.9	28.6	30.7	33.6	28.8	29.4	31.6	34.5	29.3	30.0	32.2	35.2
	SHC	24.1	20.0	20.6	16.8	26.0	21.2	22.1	17.8	27.0	22.6	23.5	18.7
	kW	2.1	2.1	2.1	2.1	2.1	2.1	2.1	2.2	2.1	2.1	2.1	2.2
85	TC	26.9	27.5	29.5	32.3	27.6	28.1	30.2	33.1	28.3	28.7	30.8	33.7
	SHC	23.8	19.5	20.3	16.4	25.6	20.8	21.7	17.4	26.5	22.1	23.1	18.3
	kW	2.3	2.3	2.4	2.4	2.3	2.4	2.4	2.4	2.4	2.4	2.4	2.4
95	TC	25.6	26.2	28.2	30.8	26.3	26.8	28.8	31.5	27.0	27.3	29.3	32.0
	SHC	23.1	19.1	19.9	16.0	24.7	20.5	21.3	16.9	26.2	21.7	22.6	17.8
	kW	2.6	2.6	2.6	2.6	2.6	2.6	2.6	2.6	2.6	2.6	2.6	2.6
105	TC	24.3	24.7	26.6	29.2	25.1	25.3	27.2	29.7	25.9	25.7	27.5	30.1
	SHC	22.4	18.6	19.3	15.4	23.8	19.9	20.8	16.3	24.4	21.1	22.1	17.2
	kW	2.9	2.9	2.9	2.9	2.9	2.9	2.9	2.9	2.9	2.9	2.9	2.9
115	TC	22.8	23.2	24.9	27.3	23.8	23.6	25.3	27.7	24.5	24.0	25.7	28.1
	SHC	21.7	18.0	18.8	14.8	22.3	19.3	20.2	15.7	23.7	20.5	21.5	16.6
	kW	3.2	3.2	3.2	3.2	3.2	3.2	3.2	3.2	3.2	3.2	3.2	3.2
125	TC	21.4	21.4	24.9	27.3	23.8	23.6	25.3	27.7	24.5	24.0	25.7	28.1
	SHC	20.7	17.3	18.8	14.8	22.3	19.3	20.2	15.7	23.7	20.5	21.5	16.6
	kW	3.5	3.5	3.2	3.2	3.2	3.2	3.2	3.2	3.2	3.2	3.2	3.2

Heating Extended Performance Table -10-20

48EZ030																					
Return Air (F db)	CFM (Standard Air)		Air Temperature Entering Outdoor Coil (F db at 70% rh)																		
			-10				0				10				17				20		
60	875	TC	9.4		8.7		11.9		10.9		14.4		13.2		16.3		14.9		17.2		15.6
		kW	1.74				1.81				1.89				1.97				2.00		
	1000	TC	9.6		8.9		11.8		10.8		14.5		13.3		16.3		14.9		17.3		15.7
		kW	1.72				1.84				1.86				1.92				1.96		
	1125	TC	9.6		8.9		12.0		11.1		14.5		13.3		16.4		15.0		17.5		15.9
		kW	1.70				1.76				1.82				1.91				1.94		
70	875	TC	8.9		8.2		11.4		10.5		14.0		12.8		15.9		14.5		16.5		15.0
		kW	1.92				2.01				2.10				2.17				2.20		
	1000	TC	9.0		8.3		11.5		10.5		14.1		12.9		16.0		14.6		16.8		15.2
		kW	1.91				1.98				2.06				2.13				2.16		
	1125	TC	9.0		8.4		11.5		10.6		14.9		13.7		16.4		15.0		17.5		15.9
		kW	1.89				1.96				2.03				2.09				2.12		
80	875	TC	8.2		7.6		10.8		9.9		13.5		12.4		15.3		13.9		15.7		14.3
		kW	2.11				2.21				2.32				2.39				2.41		
	1000	TC	8.3		7.7		10.9		10.0		13.5		12.4		15.4		14.1		15.9		14.4
		kW	2.09				2.19				2.28				2.35				2.37		
	1125	TC	8.2		7.6		10.9		10.0		13.6		12.5		15.6		14.2		16.2		14.7
		kW	2.07				2.16				2.25				2.31				2.34		

Heating Extended Performance Table 30-60

48EZ030																					
Return Air (F db)	CFM (Standard Air)		Air Temperature Entering Outdoor Coil (F db at 70% rh)																		
			30				40				47				50				60		
60	875	TC	20.3		17.8		26.0		26.0		29.4		29.4		30.6		30.6		34.7		34.7
		kW	2.13				2.27				2.35				2.38				2.51		
	1000	TC	20.6		18.1		26.1		26.1		29.4		29.4		30.7		30.7		34.8		34.8
		kW	2.08				2.19				2.26				2.29				2.40		
	1125	TC	21.3		18.7		26.2		26.2		29.4		29.4		30.7		30.7		34.8		34.8
		kW	2.05				2.13				2.20				2.23				2.31		
70	875	TC	18.6		16.3		24.4		24.4		28.9		28.9		30.1		30.1		34.1		34.1
		kW	2.29				2.49				2.59				2.62				2.76		
	1000	TC	19.4		17.0		25.5		25.5		29.0		29.0		30.2		30.2		34.2		34.2
		kW	2.27				2.43				2.50				2.53				2.65		
	1125	TC	21.5		18.8		26.2		26.2		30.2		30.2		34.2		34.2		34.2		34.2
		kW	2.22				2.36				2.43				2.46				2.56		
80	875	TC	17.3		15.2		22.9		22.9		28.3		28.3		29.5		29.5		33.6		33.6
		kW	2.50				2.71				2.86				2.88				3.04		
	1000	TC	17.6		15.4		23.6		23.6		28.5		28.5		29.7		29.7		33.7		33.7
		kW	2.45				2.65				2.76				2.78				2.92		
	1125	TC	18.2		16.0		24.3		24.3		28.6		28.6		29.8		29.8		33.6		33.6
		kW	2.43				2.60				2.68				2.71				2.83		

*At 75°F entering dry bulb—Tennessee Valley Authority [TVA] rating conditions; all others at 80°F entering dry bulb. See Legend and Notes.

PERFORMANCE DATA (CONT)- STANDARD ECM INDOOR MOTOR

Cooling Extended Performance Table

48EZ036 Cooling Table													
Temp (F) Outdoor Air Entering Condenser		Evaporator Air—CFM/BF											
		1100/0.06				1225/0.07				1400/0.08			
		Evaporator Air — Ewb (F)											
		62	63*	67	72	62	63*	67	72	62	63*	67	72
75	TC	36.2	36.8	39.7	43.8	36.9	37.4	40.3	44.4	37.9	38.1	41.0	45.1
	SHC	33.2	26.7	27.8	22.3	34.7	27.9	29.0	23.1	36.9	29.6	30.9	24.2
	kW	2.7	2.7	2.7	2.7	2.7	2.7	2.7	2.8	2.8	2.8	2.8	2.9
85	TC	34.6	35.1	37.9	41.8	35.3	35.6	38.4	42.4	36.4	36.3	39.1	43.1
	SHC	32.4	26.0	27.1	21.6	34.0	27.1	28.3	22.4	35.6	28.9	30.2	23.6
	kW	2.9	2.9	3.0	3.0	3.0	3.0	3.0	3.0	3.1	3.1	3.1	3.2
95	TC	33.0	33.4	36.0	39.7	33.7	33.8	36.5	40.2	34.8	34.4	37.0	40.8
	SHC	31.6	25.3	26.4	20.9	32.9	26.4	27.6	21.7	34.4	28.1	29.4	22.8
	kW	3.2	3.2	3.3	3.3	3.3	3.3	3.3	3.4	3.4	3.4	3.4	3.5
105	TC	31.3	31.5	34.0	37.5	32.1	31.9	34.3	37.9	33.1	32.4	34.9	38.4
	SHC	30.6	24.5	25.6	20.1	31.5	25.7	26.8	20.9	32.8	27.3	28.6	22.0
	kW	3.6	3.6	3.6	3.6	3.6	3.6	3.7	3.7	3.8	3.7	3.8	3.8
115	TC	29.6	29.4	31.8	35.0	30.4	29.8	32.1	35.4	31.3	30.3	32.6	35.8
	SHC	29.3	23.7	24.8	19.3	30.0	24.8	26.0	20.0	31.0	26.4	27.7	21.1
	kW	4.0	4.0	4.0	4.0	4.0	4.0	4.0	4.0	4.1	4.1	4.1	4.2
125	TC	27.8	27.2	29.4	32.4	28.4	27.5	29.7	32.7	29.3	28.0	30.1	33.0
	SHC	27.5	22.8	23.9	18.4	28.2	23.8	25.0	19.1	29.0	25.4	26.7	20.2
	kW	4.4	4.3	4.4	4.4	4.4	4.4	4.4	4.4	4.5	4.5	4.5	4.5

48EZ

Heating Extended Performance Table -10-20

48EZ036																
Return Air (F db)	CFM (Standard Air)		Air Temperature Entering Outdoor Coil (F db at 70% rh)													
			-10		0		10		17		20					
60	1100	TC	12.1	11.2	15.1	13.9	18.5	16.9	21.4	19.5	22.8	20.7				
		kW	2.25		2.34		2.43		2.49		2.51					
	1225	TC	12.3	11.4	15.4	14.2	18.7	17.2	21.7	19.7	22.9	20.7				
		kW	2.28		2.37		2.44		2.50		2.53					
	1400	TC	12.8	11.8	15.8	14.6	19.3	17.7	22.0	20.1	23.2	21.0				
		kW	2.37		2.44		2.53		2.56		2.59					
70	1100	TC	11.1	10.3	14.3	13.1	17.6	16.1	20.6	18.8	21.9	19.9				
		kW	2.43		2.55		2.65		2.74		2.77					
	1225	TC	11.4	10.5	14.5	13.4	17.9	16.4	20.6	18.8	22.4	20.3				
		kW	2.47		2.58		2.67		2.76		2.78					
	1400	TC	11.8	10.9	15.0	13.8	18.4	16.9	21.2	19.3	23.0	20.8				
		kW	2.51		2.65		2.73		2.82		2.82					
80	1100	TC	10.0	9.2	13.2	12.2	16.7	15.3	19.3	17.6	20.8	18.8				
		kW	2.61		2.75		2.89		2.97		3.01					
	1225	TC	10.2	9.5	13.5	12.5	17.0	15.6	19.6	17.9	21.2	19.2				
		kW	2.65		2.79		2.91		2.99		3.03					
	1400	TC	10.7	9.9	14.1	13.0	17.5	16.1	20.1	18.4	21.7	19.7				
		kW	2.73		2.87		2.97		3.05		3.08					

Heating Extended Performance Table

48EZ036																
Return Air (F db)	CFM (Standard Air)		Air Temperature Entering Outdoor Coil (F db at 70% rh)													
			30		40		47		50		60					
60	1100	TC	27.3	23.9	32.6	32.6	36.6	36.6	37.8	37.8	42.1	42.1				
		kW	2.59		2.68		2.74		2.77		2.86					
	1225	TC	27.6	24.2	32.8	32.8	36.8	36.8	37.9	37.9	42.2	42.2				
		kW	2.60		2.67		2.72		2.75		2.83					
	1400	TC	28.0	24.5	33.0	33.0	37.0	37.0	38.2	38.2	42.2	42.2				
		kW	2.65		2.71		2.75		2.77		2.84					
70	1100	TC	26.9	23.6	32.1	32.1	36.0	36.0	37.1	37.1	41.2	41.2				
		kW	2.84		2.94		3.01		3.04		3.14					
	1225	TC	27.1	23.7	32.3	32.3	36.2	36.2	37.3	37.3	41.4	41.4				
		kW	2.85		2.94		3.00		3.03		3.12					
	1400	TC	27.5	24.1	32.5	32.5	36.4	36.4	37.5	37.5	41.6	41.6				
		kW	2.90		2.97		3.02		3.04		3.11					
80	1100	TC	26.7	23.4	31.6	31.6	35.5	35.5	36.5	36.5	40.4	40.4				
		kW	3.13		3.23		3.30		3.33		3.44					
	1225	TC	26.9	23.5	31.8	31.8	35.6	35.6	36.7	36.7	40.6	40.6				
		kW	3.13		3.23		3.29		3.32		3.42					
	1400	TC	27.2	23.9	32.3	32.3	35.9	35.9	37.0	37.0	40.8	40.8				
		kW	3.17		3.25		3.30		3.33		3.40					

*At 75°F entering dry bulb—Tennessee Valley Authority [TVA] rating conditions; all others at 80°F entering dry bulb. See Legend and Notes.

PERFORMANCE DATA (CONT)- STANDARD ECM INDOOR MOTOR

Cooling Extended Performance Table

48EZ042 Cooling Performance Table													
Temp (F) Outdoor Air Entering Condenser		Evaporator Air—CFM/BF											
		1100/0.06				1225/0.07				1400/0.08			
		Evaporator Air — Ewb (F)											
		62	63*	67	72	62	63*	67	72	62	63*	67	72
75	TC	39.6	40.4	43.4	47.6	40.5	41.2	44.2	48.4	41.5	42.1	45.1	49.4
	SHC	33.5	27.6	28.6	23.4	35.4	29.0	30.0	24.3	37.9	30.8	31.9	25.6
	kW	3.0	3.0	3.0	3.1	3.0	3.0	3.0	3.1	3.0	3.0	3.0	3.1
85	TC	37.9	38.7	41.5	45.5	38.7	39.4	42.3	46.3	39.7	40.2	43.2	47.2
	SHC	32.8	26.9	27.8	22.7	34.6	28.2	29.2	23.6	37.0	30.0	31.1	24.8
	kW	3.3	3.3	3.4	3.4	3.3	3.3	3.4	3.4	3.3	3.3	3.4	3.4
95	TC	36.2	36.8	39.6	43.4	36.9	37.5	40.3	44.1	37.8	38.2	41.0	44.9
	SHC	32.0	26.1	27.0	21.9	33.8	27.4	28.4	22.8	35.9	29.1	30.3	24.0
	kW	3.7	3.7	3.7	3.8	3.7	3.7	3.7	3.8	3.7	3.7	3.7	3.8
105	TC	34.2	34.8	37.4	41.0	34.9	35.4	38.0	41.6	36.0	36.0	38.7	42.3
	SHC	31.0	25.2	26.2	21.1	32.7	26.5	27.6	22.0	34.3	28.3	29.4	23.2
	kW	4.1	4.1	4.1	4.1	4.1	4.1	4.1	4.1	4.1	4.1	4.1	4.1
115	TC	32.1	32.6	35.0	38.4	32.8	33.1	35.5	38.9	34.0	33.7	36.1	39.5
	SHC	30.0	24.3	25.2	20.2	31.4	25.6	26.6	21.0	32.8	27.3	28.5	22.2
	kW	4.5	4.5	4.5	4.5	4.5	4.5	4.5	4.6	4.5	4.5	4.5	4.6
125	TC	29.8	30.1	32.3	35.3	30.6	30.5	32.7	35.7	31.7	31.0	33.2	36.2
	SHC	28.6	23.2	24.2	19.1	29.6	24.5	25.5	20.0	30.6	26.1	27.3	21.1
	kW	4.9	4.9	4.9	5.0	4.9	4.9	4.9	5.0	4.9	4.9	4.9	5.0

48EZ

Heating Extended Performance Table -10-20

48EZ042																				
Return Air (F db)	CFM (Standard Air)		Air Temperature Entering Outdoor Coil (F db at 70% rh)																	
			-10		0		10		17		20									
60	1225	TC	13.6	12.5	16.6	15.3	19.7	18.1	22.2	20.2	23.7	21.5								
		kW	2.42		2.51		2.64		2.76		2.81									
	1400	TC	13.6	12.6	16.7	15.3	19.8	18.2	22.3	20.3	23.7	21.5								
		kW	2.39		2.48		2.60		2.70		2.75									
	1575	TC	13.7	12.7	16.8	15.5	19.8	18.2	22.3	20.4	23.8	21.6								
		kW	2.36		2.24		2.54		2.63		2.68									
70	1225	TC	13.0	12.1	16.1	14.9	19.4	17.8	21.8	19.9	23.3	21.1								
		kW	2.70		2.80		2.93		3.05		3.11									
	1400	TC	13.2	12.2	16.2	14.9	19.4	17.8	21.9	20.0	23.4	21.2								
		kW	2.67		2.76		2.88		2.99		3.05									
	1575	TC	13.2	12.2	16.3	15.0	19.5	17.9	22.0	20.1	23.5	21.3								
		kW	2.64		2.72		2.82		2.93		2.98									
80	1225	TC	12.8	11.9	16.0	14.7	19.0	17.4	21.4	19.6	22.9	20.8								
		kW	3.02		3.13		3.25		3.37		3.43									
	1400	TC	12.9	11.9	15.9	14.6	19.0	17.4	21.5	19.6	23.0	20.9								
		kW	2.99		2.97		2.83		3.31		3.37									
	1575	TC	13.0	12.0	15.8	14.6	19.1	17.6	21.6	19.7	23.1	21.0								
		kW	2.96		3.04		3.14		3.24		3.30									

Heating Extended Performance Table

48EZ042																				
Return Air (F db)	CFM (Standard Air)		Air Temperature Entering Outdoor Coil (F db at 70% rh)																	
			30		40		47		50		60									
60	1225	TC	29.2	25.6	35.6	35.6	40.8	40.8	42.0	42.0	49.8	49.8								
		kW	2.99		3.20		3.35		3.40		3.70									
	1400	TC	29.3	25.7	35.8	35.8	41.0	41.0	43.0	43.0	50.2	50.2								
		kW	2.91		3.09		3.24		3.31		3.55									
	1575	TC	29.4	25.8	36.0	36.0	41.3	41.3	43.2	43.2	50.6	50.6								
		kW	2.82		2.99		3.13		3.18		3.41									
70	1225	TC	28.8	25.2	35.1	35.1	40.1	40.1	41.9	41.9	48.8	48.8								
		kW	3.32		3.57		3.74		3.81		4.11									
	1400	TC	28.9	25.3	35.3	35.3	40.3	40.3	42.1	42.1	49.1	49.1								
		kW	3.24		3.46		3.62		3.68		3.95									
	1575	TC	29.0	25.4	35.4	35.4	40.5	40.5	42.4	42.4	49.5	49.5								
		kW	3.16		3.35		3.49		3.56		3.79									
80	1225	TC	28.4	24.9	34.6	34.6	39.5	39.5	41.3	41.3	47.9	47.9								
		kW	3.68		3.97		4.14		4.22		4.55									
	1400	TC	28.5	25.0	34.7	34.7	39.7	39.7	41.5	41.5	48.2	48.2								
		kW	3.59		3.85		4.01		4.08		4.38									
	1575	TC	28.6	25.1	34.9	34.9	39.9	39.9	41.7	41.7	48.6	48.6								
		kW	3.51		3.73		3.88		3.94		4.21									

*At 75°F entering dry bulb—Tennessee Valley Authority [TVA] rating conditions; all others at 80°F entering dry bulb. See Legend and Notes.

PERFORMANCE DATA (CONT)- STANDARD ECM INDOOR MOTOR

Cooling Extended Performance Table

48EZ048													
Temp (F) Outdoor Air Entering Condenser		Evaporator Air—CFM/BF											
		1260/0.06				1400/0.06				1600/0.08			
		Evaporator Air — Ewb (F)											
		62	63	67	72	62	63	67	72	62	63	67	72
75	TC	45.0	45.8	49.6	54.7	46.7	47.3	51.2	56.3	48.1	48.7	52.5	57.8
	SHC	39.3	32.0	33.4	27.2	42.6	34.3	35.8	28.9	45.8	36.8	38.4	30.6
	kW	3.4	3.4	3.4	3.4	3.4	3.4	3.4	3.5	3.4	3.4	3.4	3.5
85	TC	42.8	43.6	47.2	52.1	44.3	44.9	48.6	53.5	45.6	46.1	49.9	54.8
	SHC	38.2	30.9	32.3	26.2	41.3	33.2	34.7	27.7	44.3	35.5	37.3	29.4
	kW	3.7	3.7	3.8	3.8	3.7	3.7	3.8	3.8	3.8	3.8	3.8	3.8
95	TC	40.6	41.3	44.7	49.4	41.8	42.4	46.0	50.7	44.2	43.7	47.0	51.8
	SHC	36.9	29.8	31.2	25.2	39.9	32.0	33.6	26.7	43.0	34.6	36.1	28.3
	kW	4.1	4.1	4.2	4.2	4.1	4.1	4.2	4.2	4.2	4.1	4.2	4.2
105	TC	38.2	38.9	42.1	46.4	39.6	39.8	43.1	47.6	41.5	40.8	44.0	48.5
	SHC	35.7	28.7	30.1	24.0	38.3	30.7	32.3	25.5	40.0	33.2	34.8	27.0
	kW	4.6	4.6	4.6	4.6	4.6	4.6	4.6	4.7	4.6	4.6	4.6	4.7
115	TC	35.7	36.3	39.3	43.3	38.2	37.1	40.1	44.2	38.7	37.9	40.8	45.0
	SHC	34.4	27.5	28.9	22.9	35.7	29.5	31.0	24.3	38.2	31.8	33.5	25.8
	kW	5.0	5.0	5.1	5.1	5.1	5.0	5.1	5.1	5.1	5.1	5.1	5.1
125	TC	33.4	33.4	36.2	39.4	34.6	34.1	36.9	40.5	36.1	34.8	37.5	41.2
	SHC	32.1	26.2	27.6	21.5	33.8	28.2	29.7	22.9	35.6	30.2	31.9	24.4
	kW	5.6	5.6	5.6	5.7	5.6	5.6	5.6	5.6	5.6	5.6	5.6	5.6

48EZ

Heating Extended Performance Table -10-20

48EZ048																				
Return Air (F db)	CFM (Standard Air)		Air Temperature Entering Outdoor Coil (F db at 70% rh)																	
			-10		0		10		17		20									
60	1260	TC	15.10	14.00	18.60	17.10	22.40	20.50	25.20	23.00	26.90	24.40								
		kW	2.66		2.76		2.87		2.95		3.00									
	1400	TC	15.40	14.30	18.90	17.40	22.70	20.90	25.60	23.30	27.30	24.80								
		kW	2.70		2.79		2.89		2.96		3.03									
	1600	TC	15.70	14.50	19.20	17.70	23.00	21.10	25.80	23.60	27.60	25.00								
		kW	2.67		2.79		2.88		2.94		3.01									
70	1260	TC	14.40	13.30	17.90	16.50	21.80	20.00	24.60	22.50	26.40	23.90								
		kW	2.94		3.03		3.16		3.25		3.31									
	1400	TC	14.70	13.60	18.20	16.80	22.10	20.30	25.00	22.80	26.70	24.20								
		kW	2.97		3.05		3.17		3.26		3.31									
	1600	TC	15.00	13.90	18.60	17.10	22.40	20.60	25.30	23.00	27.00	24.50								
		kW	2.97		3.05		3.16		3.24		3.28									
80	1260	TC	13.50	12.50	17.20	15.80	21.00	19.30	24.00	21.90	25.70	23.30								
		kW	3.23		3.34		3.47		3.58		3.66									
	1400	TC	13.90	12.80	17.50	16.10	21.40	19.70	24.40	22.20	26.10	23.70								
		kW	3.26		3.36		3.48		3.58		3.65									
	1600	TC	14.20	13.20	17.80	16.40	21.70	19.90	24.70	22.50	25.90	23.50								
		kW	3.26		3.35		3.46		3.56		3.36									

Heating Extended Performance Table

48EZ048																				
Return Air (F db)	CFM (Standard Air)		Air Temperature Entering Outdoor Coil (F db at 70% rh)																	
			30		40		47		50		60									
60	1260	TC	33.30	29.20	40.50	40.50	46.60	46.60	48.80	48.80	56.60	56.60								
		kW	3.15		3.32		3.48		3.54		3.78									
	1400	TC	33.70	29.50	41.00	41.00	47.10	47.10	49.30	49.30	57.30	57.30								
		kW	3.14		3.30		3.45		3.50		3.72									
	1600	TC	34.00	29.80	41.40	41.40	47.50	47.50	49.70	49.70	57.70	57.70								
		kW	3.11		3.25		3.38		3.43		3.61									
70	1260	TC	32.60	28.60	39.70	39.70	45.50	45.50	47.60	47.60	55.50	55.50								
		kW	3.50		3.69		3.85		3.91		4.17									
	1400	TC	33.00	28.90	40.10	40.10	46.00	46.00	48.20	48.20	56.10	56.10								
		kW	3.48		3.65		3.80		3.86		4.10									
	1600	TC	33.30	29.20	40.50	40.60	46.50	46.50	48.80	48.80	56.60	56.60								
		kW	3.34		3.59		3.72		3.79		3.99									
80	1260	TC	31.90	28.00	38.90	38.90	44.50	44.50	46.60	46.60	54.40	54.40								
		kW	3.87		4.09		4.26		4.33		4.60									
	1400	TC	32.30	26.30	39.30	39.30	45.10	45.10	47.10	47.10	55.00	55.00								
		kW	3.85		4.05		4.20		4.26		4.51									
	1600	TC	32.60	28.60	39.70	39.70	45.50	45.50	47.60	47.60	55.50	55.50								
		kW	3.80		3.98		4.12		4.17		4.40									

*At 75°F entering dry bulb—Tennessee Valley Authority [TVA] rating conditions; all others at 80°F entering dry bulb. See Legend and Notes.

PERFORMANCE DATA (CONT)- STANDARD ECM INDOOR MOTOR

Cooling Extended Performance Table

48EZ060													
Temp (F) Outdoor Air Entering Condenser		Evaporator Air—CFM/BF											
		1500/0.004				1750/0.007				2000/0.01			
		Evaporator Air — Ewb (F)											
		62	63*	67	72	62	63*	67	72	62	63*	67	72
75	TC	57.2	58.2	62.4	68.1	58.8	59.7	64.0	69.8	60.0	60.8	64.9	70.8
	SHC	49.4	47.9	41.6	33.8	53.6	51.8	44.5	35.4	57.6	55.4	47.1	36.8
	kW	4.1	4.1	4.2	4.2	4.2	4.3	4.3	4.4	4.4	4.4	4.5	4.6
85	TC	54.7	55.6	59.7	65.2	56.2	57.0	61.1	66.6	57.4	58.1	61.9	67.4
	SHC	48.2	46.7	40.4	32.6	52.4	50.5	43.2	34.2	56.3	54.2	45.8	35.6
	kW	4.5	4.5	4.6	4.7	4.7	4.7	4.8	4.9	4.8	4.9	5.0	5.0
95	TC	52.2	53.0	56.9	62.0	53.5	54.3	58.0	63.2	55.0	55.3	58.7	64.1
	SHC	47.0	45.4	39.2	31.4	51.1	49.2	41.9	32.9	55.0	52.9	44.5	34.4
	kW	5.0	5.0	5.1	5.2	5.1	5.2	5.3	5.3	5.2	5.3	5.5	5.5
105	TC	49.4	50.2	53.8	58.7	50.7	51.4	54.8	59.6	52.5	52.4	55.4	60.2
	SHC	45.7	44.1	37.9	30.1	49.8	47.9	40.6	31.6	52.5	51.6	43.2	33.0
	kW	5.5	5.6	5.6	5.7	5.7	5.7	5.8	5.9	5.8	5.8	6.0	6.1
115	TC	46.5	47.2	50.5	55.0	48.1	48.3	51.3	56.8	49.7	49.7	51.8	57.0
	SHC	44.3	42.7	36.4	28.7	48.1	46.6	39.2	30.6	49.7	49.7	41.8	31.7
	kW	6.1	6.2	6.2	6.3	6.2	6.3	6.4	6.4	6.4	6.4	6.6	6.6
125	TC	43.3	43.9	46.7	52.2	45.2	45.1	47.4	52.5	46.4	46.4	47.9	52.2
	SHC	42.8	41.2	34.9	27.8	45.2	45.1	37.6	28.9	46.4	46.4	40.2	29.7
	kW	6.7	6.8	6.8	6.8	6.8	6.9	7.0	7.0	7.0	7.0	7.2	7.2

48EZ

Heating Extended Performance Table -10-20

48EZ060																				
Return Air (F db)	CFM (Standard Air)		Air Temperature Entering Outdoor Coil (F db at 70% rh)																	
			-10		0		10		17		20									
60	1500	TC	17.89	16.55	22.37	20.58	27.39	25.14	27.90	25.44	33.30	30.20								
		kW	3.14		3.33		3.56		3.71		3.76									
	1750	TC	18.44	17.06	22.91	21.08	28.07	25.77	32.32	29.47	34.25	31.06								
		kW	3.23		3.39		3.60		3.74		3.78									
	2000	TC	19.03	17.60	23.49	21.62	28.75	26.38	33.08	30.16	35.08	31.81								
		kW	3.36		3.50		3.70		3.82		3.86									
70	1500	TC	16.20	14.98	21.25	19.55	26.32	24.16	30.28	27.61	32.03	29.05								
		kW	3.36		3.66		3.89		4.09		4.14									
	1750	TC	16.82	15.56	21.85	20.11	26.96	24.74	31.00	28.26	32.81	29.76								
		kW	3.48		3.74		3.96		4.12		4.16									
	2000	TC	17.49	16.17	22.50	20.71	27.85	25.56	31.74	28.94	33.60	30.47								
		kW	3.62		3.86		4.07		4.21		4.25									
80	1500	TC	13.77	12.73	19.62	18.05	25.11	23.05	28.93	26.37	30.64	27.79								
		kW	3.50		3.94		4.24		4.47		4.54									
	1750	TC	14.42	13.34	20.32	18.69	25.79	23.67	29.68	27.06	31.43	28.50								
		kW	3.63		4.04		4.31		4.52		4.57									
	2000	TC	15.10	13.96	21.01	19.33	26.48	24.31	30.45	27.76	32.22	29.22								
		kW	3.79		4.19		4.42		4.62		4.67									

Heating Extended Performance Table

48EZ060																				
Return Air (F db)	CFM (Standard Air)		Air Temperature Entering Outdoor Coil (F db at 70% rh)																	
			30		40		47		50		60									
60	1500	TC	40.88	35.82	49.46	49.46	54.82	54.82	58.83	58.83	63.53	63.53								
		kW	3.98		4.26		4.47		4.53		4.71									
	1750	TC	42.02	36.82	50.89	50.89	56.64	56.64	58.34	58.34	61.76	61.76								
		kW	3.97		4.25		4.33		4.38		4.51									
	2000	TC	43.05	37.72	52.52	52.52	56.01	56.01	57.04	57.04	60.19	60.19								
		kW	4.03		4.26		4.30		4.34		4.46									
70	1500	TC	39.08	34.24	47.32	47.32	52.27	52.27	53.85	53.85	58.08	58.08								
		kW	4.36		4.64		4.80		4.86		4.99									
	1750	TC	40.15	35.18	48.73	48.73	56.00	56.00	58.71	58.71	66.11	66.11								
		kW	4.35		4.60		4.82		4.88		5.08									
	2000	TC	41.14	36.05	49.89	49.89	56.89	56.89	58.64	58.64	62.11	62.11								
		kW	4.40		4.65		4.79		4.84		4.97									
80	1500	TC	37.15	32.55	39.76	39.76	41.79	41.79	42.85	42.85	46.59	46.59								
		kW	4.77		4.80		4.82		4.87		5.01									
	1750	TC	38.40	33.64	45.36	45.36	47.19	47.19	48.68	48.68	52.98	52.98								
		kW	4.78		4.95		4.96		5.01		5.15									
	2000	TC	39.35	34.48	47.88	47.88	52.12	52.12	53.40	53.40	59.14	59.14								
		kW	4.84		5.06		5.13		5.16		5.32									

*At 75°F entering dry bulb—Tennessee Valley Authority [TVA] rating conditions; all others at 80°F entering dry bulb. See Legend and Notes.

PERFORMANCE DATA (CONT)

Economizer 1-in. Filter Pressure Drop (in. wc)

UNIT48EZ	PRESSURE DROP
024-036	0.20
042-060	0.25

LEGEND

BF — Bypass Factor
edb — Entering Dry–Bulb
Ewb — Entering Wet–Bulb
kW — Total Unit Power Input
SHC — Sensible Heat Capacity (1000 Btuh)
TC — Total Capacity (1000 Btuh) (net)
rh —Relative Humidity

COOLING NOTES:

1. Ratings are net; they account for the effects of the evaporator–fan motor power and heat.
2. Direct interpolation is permissible. Do not extrapolate.
3. The following formulas may be used:

$$^{t}ldb = {}^{t}edb - \frac{\text{Sensible capacity (Btuh)}}{1.10 \times \text{cfm}}$$

^{t}lwb = Wet–bulb temperature corresponding to enthalpy air leaving evaporator coil (^{h}lwb)

$$^{h}lwb = {}^{h}ewb - \frac{\text{total capacity (Btuh)}}{4.5 \times \text{cfm}}$$

Where: ^{h}ewb = Enthalpy of air entering evaporator coil

4. The SHC is based on 80° F (26.6°C) edb temperature of air entering evaporator coil. Below 80° F (26.6°C) edb, subtract (corr factor x cfm) from SHC.

Above 80° F (26.6°C) edb, add (corr factor x cfm) to SHC.
Correction Factor = 1.10 x (1 + BF) x (edb + 80).

5. Integrated capacity is maximum (instantaneous) capacity less the effect of frost on the outdoor coil and the heat required to defrost it.

48EZ

Filter Pressure Drop (in. wc)
(1-in. Filter-Supplies with Accessory Filter Rack)

FILTER SIZE	CFM																		
	500	600	700	800	900	1000	1100	1200	1300	1400	1500	1600	1700	1800	1900	2000	2100	2200	2300
20X20X1	0.05	0.07	0.08	0.1	0.12	0.13	0.14	0.15	—	—	—	—	—	—	—	—	—	—	—
24X30X1	—	—	—	0.04	0.05	0.06	0.07	0.07	0.08	0.09	0.1	—	—	—	—	—	—	—	—
24X36X1	—	—	—	—	—	—	—	0.06	0.07	0.07	0.08	0.09	0.09	0.10	0.11	0.12	0.13	0.14	0.14

48EZ Cooling (and Heat Pump Heating) Dry Coil ECM Airflow Small Cabinet

UNIT SIZE	CFM ADJUST PIN SELECT	LO PIN			NOM PIN			HI PIN		
	EXTERNAL STATIC PRESSURE RANGE (in. wc)	0.0–0.4	0.4–0.7	0.7–1.0	0.0–0.4	0.4–0.7	0.7–1.0	0.0–0.4	0.4–0.7	0.7–1.0
024	COOLING*	745	675	–	835	750	690	940	880	815
	COOLING DEHUMIDIFY	675	625	–	675	650	600	755	730	705
	HEAT PUMP COMFORT	670	605	–	740	690	635	845	795	735
030	COOLING*	940	860	785	1020	965	895	1185	1100	1010
	COOLING DEHUMIDIFY	820	785	735	820	800	770	955	920	880
	HEAT PUMP COMFORT	850	780	745	935	905	845	1055	1040	955
036	COOLING*	1025	935	–	1145	1085	1005	1320	1260	1180
	COOLING DEHUMIDIFY	925	885	–	925	900	870	1060	1040	1010
	HEAT PUMP COMFORT	955	880	–	1075	990	920	1220	1180	1125

*Heat Pump Efficiency and Cooling pin selections deliver equal airflow.

48EZ Cooling (and Heat Pump Heating) Dry Coil ECM Airflow Large Cabinet

UNIT SIZE	CFM ADJUST PIN SELECT	LO PIN	NOM PIN	HI PIN
	EXTERNAL STATIC PRESSURE RANGE (in. wc)	0.1–1.0	0.1–1.0	0.1–1.0
042	COOLING*	1100	1225	1410
	COOLING DEHUMIDIFY	980	980	1125
	HEAT PUMP COMFORT	990	1100	1265
048	COOLING*	1260	1400	1610
	COOLING DEHUMIDIFY	1120	1120	1290
	HEAT PUMP COMFORT	1135	1260	1450
060	COOLING*	1575	1750	2010
	COOLING DEHUMIDIFY	1400	1400	1610
	HEAT PUMP COMFORT	1415	1575	1810

*Heat Pump Efficiency and Cooling pin selections deliver equal airflow.

48EZ Gas Heating ECM Airflow Small Cabinet

EASY SELECT™ BOARD SETTING (CFM)		700			800			1100			1250		
Unit Size	External Static Pressure (in. wc) / Gas Heat Size	0.0–0.4	0.4–0.7	0.7–1.0	0.0–0.4	0.4–0.7	0.7–1.0	0.0–0.4	0.4–0.7	0.7–1.0	0.0–0.4	0.4–0.7	0.7–1.0
024	040	–	–	–	855	770	710	–	–	–	–	–	–
030	040	–	–	–	880	840	805	–	–	–	–	–	–
	060	–	–	–	–	–	–	1030	970	910	–	–	–
036	060	–	–	–	–	–	–	1035	995	955	–	–	–
	090	–	–	–	–	–	–	–	–	–	1170	1110	1025

48EZ Gas Heating ECM Airflow Large Cabinet

EASY SELECT™ BOARD SETTING (CFM)		1000	1250	1600	1750	1800
Unit Size	External Static Pressure (in. wc) / Gas Heat Size	0.0–1.0	0.0–1.0	0.0–1.0	0.0–1.0	0.0–1.0
042	060	1000	–	–	–	–
	090	–	1250	–	–	–
048	090	–	1250	–	–	–
	115	–	–	1600	–	–
	130	–	–	–	1750	–
060	090	–	1250	–	–	–
	115	–	–	1600	–	–
	130	–	–	–	–	1800

48EZ ECM Airflow vs Gas Heat Temperature Rise Chart

COOLING SIZE	RATED GAS INPUT RATE (X 1000)	AIRFLOW SETTING EAST SELECT™ (SCFM)	CALCULATED TEMPERATURE RISE	MIN. TEMP RISE	MAX TEMP RISE	MAX DISCH. TEMP
024	40	800	36.5	20	50	175
030	40	800	36.5	20	50	175
030	60	1100	40	35	65	165
036	60	1100	40	25	55	165
036	90	1200	54	45	75	175
042	60	1000	44	20	50	165
042	90	1250	53	35	65	170
048	90	1250	53	25	55	165
048	115	1600	53	35	65	170
048	130	1800	54	40	70	175
060	90	1600	41	25	55	155
060	115	1600	53	35	65	170
060	130	1800	53	40	70	175

48EZ

High Altitude Compensation

Natural Gas Only
Orifice Conversion - 3.5 in. wc Manifold Pressure

ALTITUDE (ft)	INPUT (Btuh)	ORIFICE NUMBER†
0-2000	40,000	#44
	60,000	#38
	90,000	#38
	115,000	#33
	130,000	#31
2001-4500	32,800	#48
	49,200	#42
	73,800	#42
	94,300	#37
	106,600	#34

* As the height above sea level increases, there is less oxygen per cubic ft of air. Therefore, heat input rate should be reduced at higher altitudes.
† Orifices available through your distributor.

Propane Gas Only
Orifice Conversion - 3.5 in wc Manifold Pressure*

ALTITUDE (ft)	INPUT (Btuh)	ORIFICE NUMBER†
0-2000	40,000	#50
	57,000	#46
	85,500	#46
	115,000	#42
	127,000	#41
2001-6000	31,200	#52
	46,800	#48
	70,200	#48
	89,700	#44
	101,400	#43

* As the height above sea level increases, there is less oxygen per cubic ft of air. Therefore, heat input rate should be reduced at higher altitudes.
† Orifices available through your distributor.

ECM Wet Coil Pressure Drop (in. wc)

UNIT SIZE	STANDARD CFM (SCFM)															
	600	700	800	900	1000	1100	1200	1300	1400	1500	1600	1700	1800	1900	2000	2100
024	0.005	0.007	0.010	0.012	0.015	–	–	–	–	–	–	–	–	–	–	–
030	–	0.007	0.010	0.012	0.015	0.018	0.021	0.024	–	–	–	–	–	–	–	–
036	–	–	–	0.019	0.023	0.027	0.032	0.037	0.042	0.047	–	–	–	–	–	–
042	–	–	–	–	0.014	0.017	0.020	0.024	0.027	0.031	0.035	0.039	0.043	–	–	–
048	–	–	–	–	–	–	0.027	0.032	0.036	0.041	0.046	0.052	0.057	0.063	0.068	–
060	–	–	–	–	–	–	–	–	–	0.029	0.032	0.036	0.040	0.045	0.049	0.053

TYPICAL PIPING AND WIRING

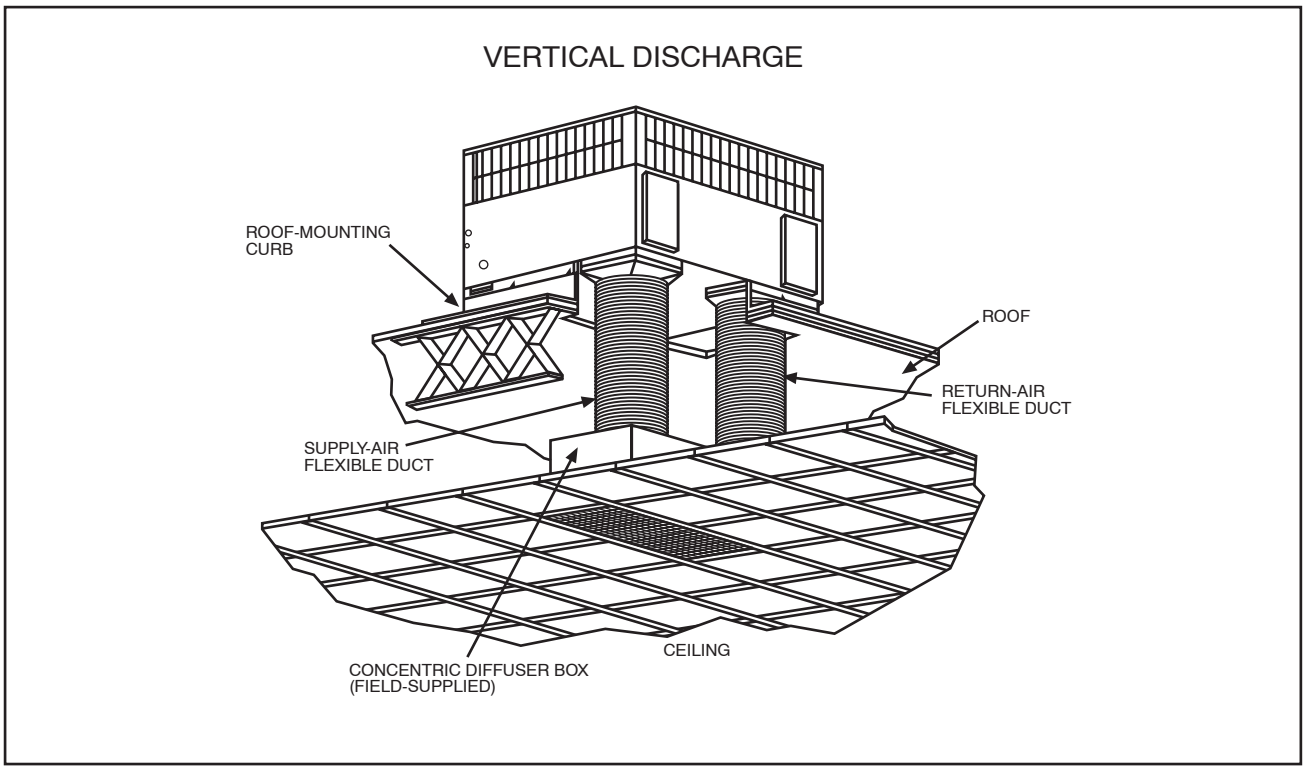

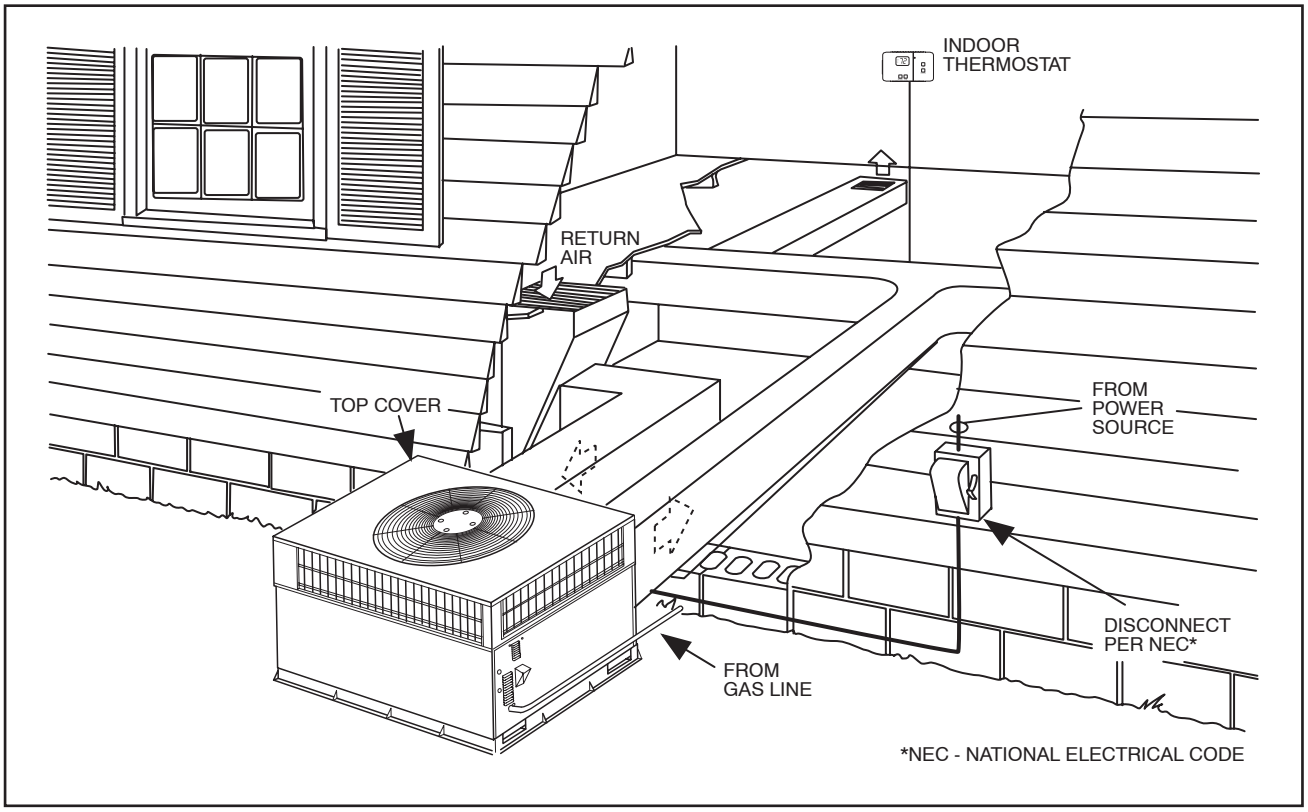

48EZ

APPLICATION DATA

Condensate trap — A 2-in. condensate trap must be field supplied.

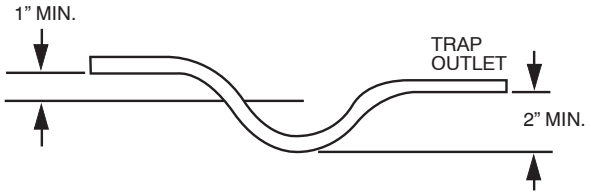

c99013

Ductwork — Secure downflow discharge ductwork to roof curb. For horizontal discharge applications, attach ductwork to unit with flanges.

To convert a unit to downflow discharge — Units are equipped with factory-installed inserts in the down-flow openings. Removal of the inserts is similar to removing an electrical knock-out. The unit is factory equipped with duct covers to seal the horizontal discharge openings in the unit. Units installed in horizontal discharge orientation do not require duct covers.

Maximum cooling airflow — To minimize the possibility of condensate blow-off from the evaporator, airflow through the units should not exceed 450 cfm per ton.

Minimum cooling airflow — Minimum cooling airflow is 350 cfm per ton in cooling mode. Airflow can be lower in certain modes when humidity removal is an issue.

Minimum ambient cooling operation temperature — All standard units have a minimum ambient cooling operating temperature of 55°F (12.8°C). With accessory low ambient temperature kit, units can operate at temperatures down to 0°F (-17.8°C).

Maximum operating outdoor air temperature for cooling is 125°F (51.7°C).

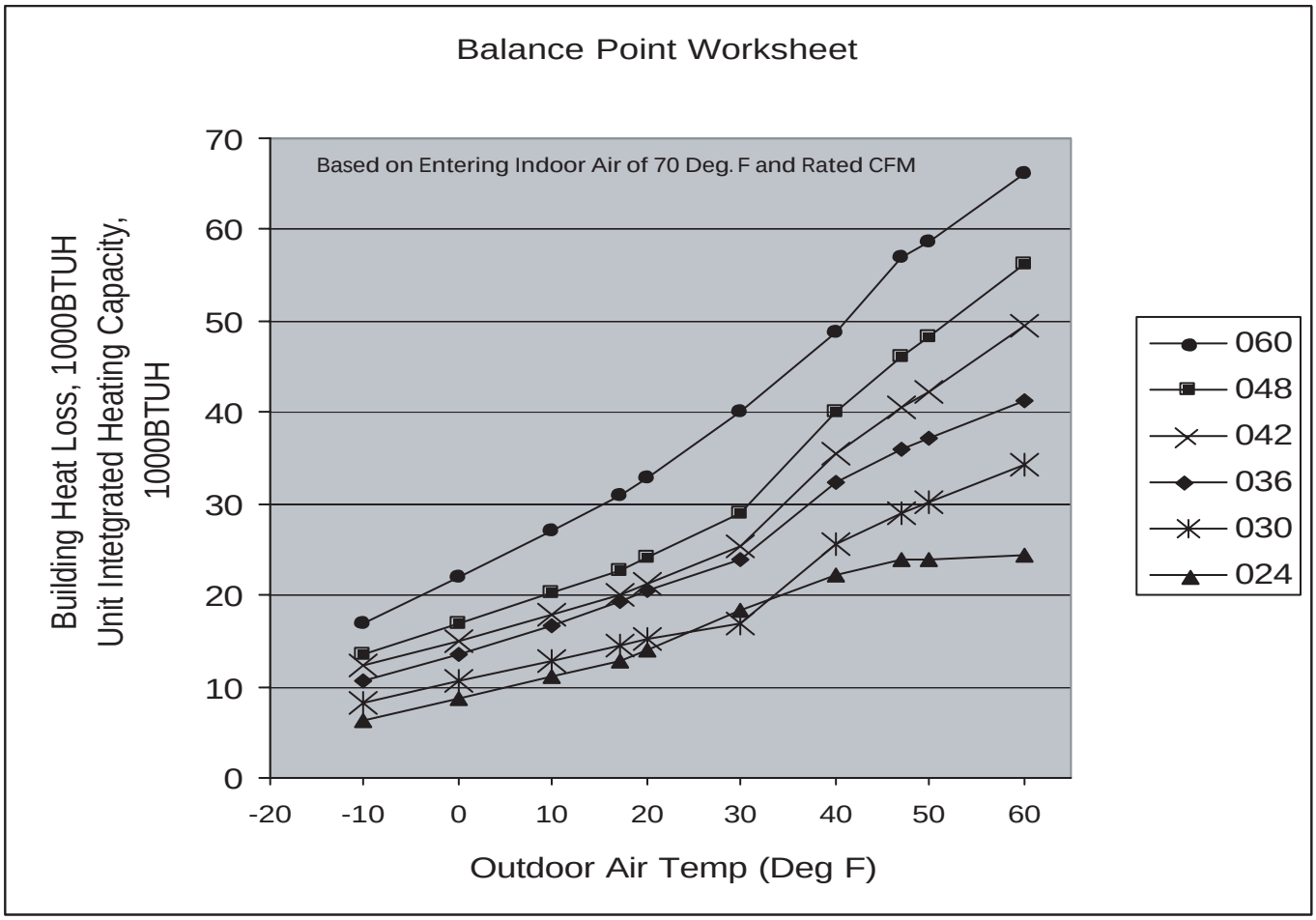

C03008

ELECTRICAL DATA

48EZ Electrical Data

48EZ UNIT SIZE	V-PH-Hz	VOLTAGE RANGE		COMPRESSOR		OUTDOOR FAN MOTOR	INDOOR FAN MOTOR	POWER SUPPLY	
		Min	Max	RLA	LRA	FLA	FLA	MCA	MAX FUSE OR CKT BKR
024	208/230-1-60	187	253	13.5	61.0	0.9	4.3	22.1/22.1	30/30
030	208/230-1-60	187	253	15.9	73.0	0.9	4.3	25.1/25.1	30/30
036	208/230-1-60	187	253	16.9	83.0	0.9	6.8	29.5/29.5	35/35
	208/230-3-60	187	253	12.2	77.0	1.6	6.8	23.7/23.7	30/30
042	208/230-1-60	187	253	22.4	105.0	0.9	6.8	35.7/35.7	45/45
	208/230-3-60	187	253	15.4	88.0	0.9	6.8	27.0/27.0	35/35
048	208/230-1-60	187	253	21.3	109.0	1.6	6.8	35.0/35.0	45/45
	208/230-3-60	187	253	14.7	91.0	1.6	6.8	26.8/26.8	35/35
060	208/230-1-60	187	253	26.9	145.0	1.5	9.1	44.2/44.2	60/60
	208/230-3-60	187	253	17.6	123.0	1.5	9.1	32.6/32.6	40/40

LEGEND

FLA -- Full Load Amps
LRA -- Locked Rotor Amps
MCA -- Minimum Circuit Amps
MOCP -- Maximum Overcurrent Protection
RLA -- Rated Load Amps

NOTES:

1. In compliance with NEC (National Electrical Code) requirements for multimotor and combination load equipment (refer to NEC Articles 430 and 440), the overcurrent protective device for the unit shall be Power Supply fuse. The CGA (Canadian Gas Association) units may be fuse or circuit breaker.
2. Minimum wire size is based on 60 C copper wire. If other than 60 C wire is used, or if length exceeds wire length in table, determine size from NEC.
3. Unbalanced 3-Phase Supply Voltage
   Never operate a motor where a phase imbalance in supply voltage is greater than 2%. Use the following formula to determine the percentage of voltage imbalance

   % Voltage imbalance

   $$= 100 \times \frac{\text{max voltage deviation from average voltage}}{\text{average voltage}}$$

EXAMPLE: Supply voltage is 230-3-60.

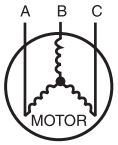

AB = 228 v
BC = 231 v
AC = 227 v

$$\text{Average Voltage} = \frac{228 + 231 + 227}{3} = \frac{686}{3} = 229$$

Determine maximum deviation from average voltage.
(AB) 229 - 228 = 1 v
(BC) 231 - 229 = 2 v
(AC) 229 - 227 = 2 v

Maximum deviation is 2 v.

Determine percent of voltage imbalance

$$\% \text{ Voltage Imbalance} = 100 \times \frac{2}{229} = 0.8\%$$

This amount of phase imbalance is satisfactory as it is below the maximum allowable 2%.

IMPORTANT: If the supply voltage phase imbalance is more than 2%, contact your local electric utility company immediately.

A06564

48EZ

TYPICAL WIRING SCHEMATIC - 208/230-1-60

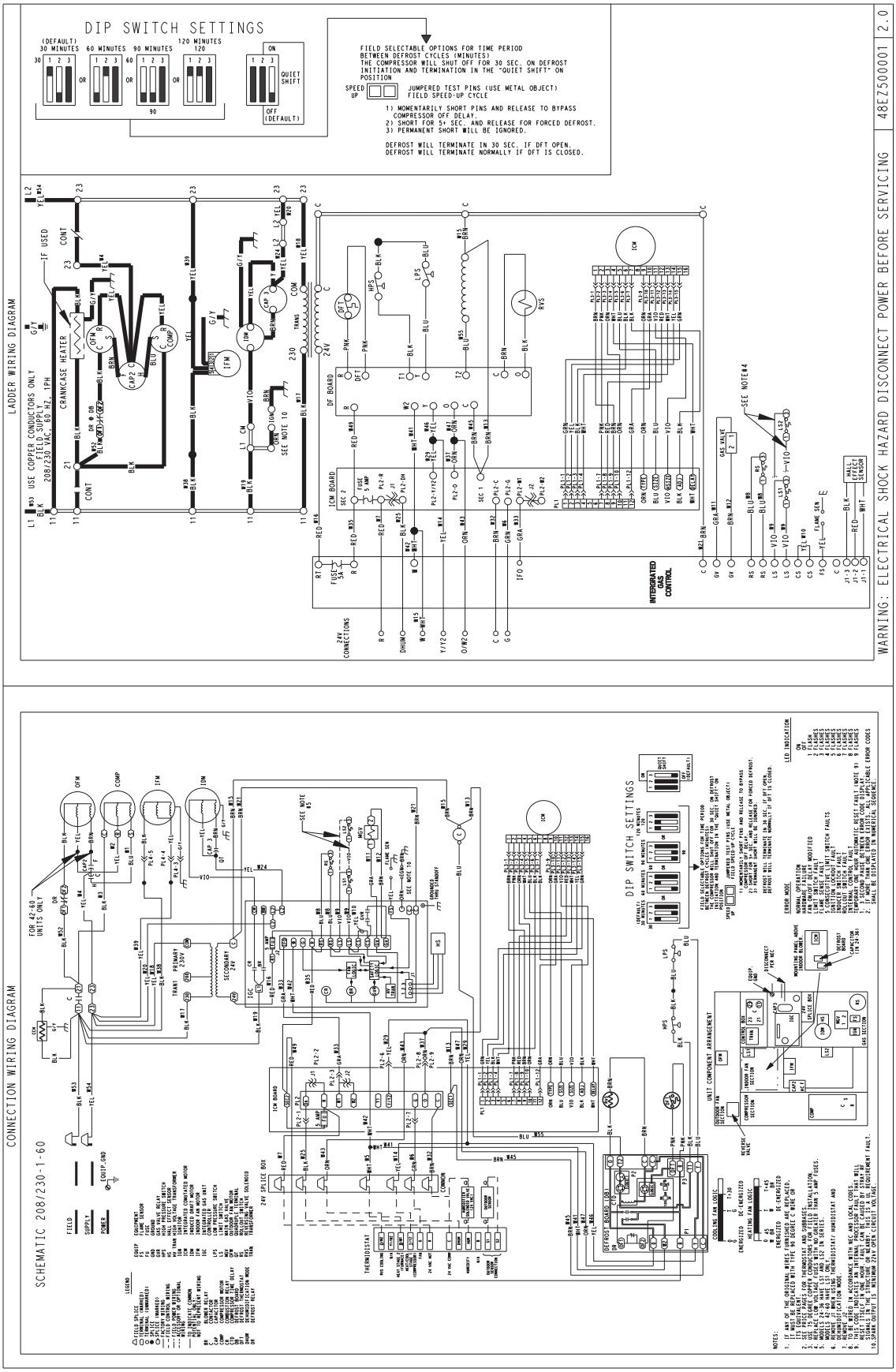

A07202

TYPICAL WIRING SCHEMATIC - 208/230-3-60

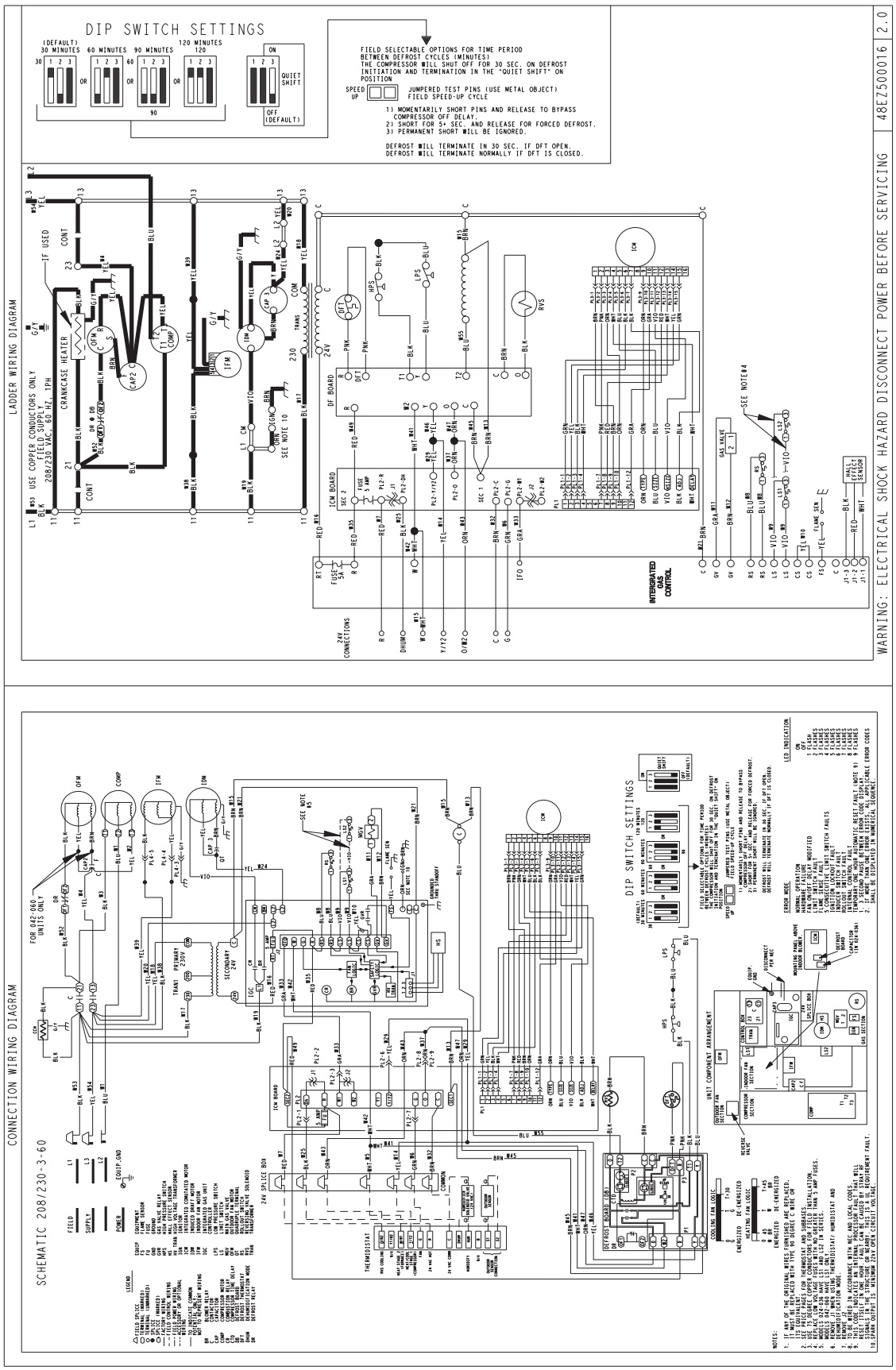

48EZ

A07203

CONTROLS

Operating sequence

When power is supplied to unit, the transformer (TRAN) is energized.

On units with crankcase heater, heater is also energized.

Cooling — With the thermostat subbase in the cooling position, the thermostat makes circuit R-O. This energizes the reversing valve solenoid (RVS) and places the unit in standby condition for cooling.

As the space temperature rises, the thermostat closes circuit R-Y. A circuit is made to contactor (C), starting the compressor (COMP) and outdoor-fan motor (OFM). Circuit R-G is made at the same time and starts the indoor-fan motor (IFM).

When the thermostat is satisfied, contacts open, deenergizing C. The COMP and OFM stop, and the IFM stops preselected time delay on the easy select board is satisfied.

Gas Heating — On a call for heating, terminal "W" of the thermostat is energized, starting the induced-draft motor. When the hall-effect sensor on the induced-draft motor senses that it has reached the required speed, the burner sequence begins. This function is performed by the integrated gas control (IGC). The evaporator fan motor is energized 45 seconds after flame is established. When the thermostat is satisfied and "W" is de-energized, the IFM stops after a 45-second time-off delay. Please note that the ignition control board (IGC) has the capability to automatically reduce the indoor fan motor on and off delays in the event of high duct static and/or partially-clogged filter. An adjustment of fan delays by the ignition control board is indicated by a flash code "1" on the LED on the IGC.

Heat Pump Heating — On a call for heat, thermostat makes circuits R-Y and R-G.

A circuit is made to C, starting COMP and OFM. Circuit R-G is also completed, energizing BR and starting IFM.

Defrost — Defrost board (DB) is a time and temperature control, which includes a field-selectable time period (dip switch 1 and 2 on the board) between checks for defrost (30, 60, 90, or 120 minutes). Electronic timer and defrost cycle start only when contactor is energized and defrost thermostat (DFT) is closed.

The defrost board is also equipped with a third dip switch for selecting Quiet Shift operation. The Quiet Shift operation turns compressor off at defrost initiation and termination. Unit is factory shipped with quiet shift turned off.

Defrost mode is identical to cooling mode. except outdoor fan motor stops and gas heat turns on to warm air supplying the conditioned space. After defrost cycle, gas heat stays on to meet the demand cycle.

Note:

1. Compressor time delay occurs through the defrost control board.
2. Defrost control board has built in 5 minute compressor delay; once the compressor has started and then stopped, it cannot be restarted again until 5 minutes have elapsed.
3. Variable Speed Blower-The indoor blower operation with a call for fan operation (G) in either cooling or heat pump heating (compressor) modes will perform by the on/off delay profile selected at start up on the easy select board.

GUIDE SPECIFICATIONS

Packaged Hybrid Heat Units Constant Volume Application

HVAC Guide Specifications

Size Range: **2 to 5 Tons, Nominal Cooling 40,000 to 130,000 Btuh, Nominal Heating Input**

Model Number: **48EZ**

Part 1—General

SYSTEM DESCRIPTION

Outdoor, packaged, air-to-air heat pump unit utilizing a hermetic scroll compressor for cooling duty and optional electric heating. Unit shall discharge supply air vertically or horizontally as shown on contract drawings. Outdoor fan/coil section shall have a draw-thru design with vertical discharge for minimum sound levels.

QUALITY ASSURANCE

A. Unit shall be rated in accordance with ARI Standards 210/240-03 and 270-95.

B. Unit shall be designed in accordance with UL Standard 1995.

C. Unit shall be manufactured in a facility registered to ISO 9001 manufacturing quality standard.

D. Unit shall be UL listed and c-UL certified as a total package for safety requirements.

E. Roof curb shall be designed to conform to NRCA Standards.

F. Insulation and adhesives shall meet NFPA 90A requirements for flame spread and smoke generation.

G. Cabinet insulation shall meet ASHRAE Standard 62P.

DELIVERY, STORAGE AND HANDLING

Unit shall be stored and handled per manufacturer's recommendations.

Part 2 — Products

EQUIPMENT

A. General:

Factory-assembled, single-piece, heat pump unit. Contained within the enclosure shall be all factory wiring, piping, controls, refrigerant charge (R-410A), and special features required prior to field start-up.

B. Unit Cabinet:

1. Unit cabinet shall be constructed of phosphated, zinc-coated, pre-painted steel capable of withstanding 500 hours of salt spray.
2. Normal service shall be through a single removable cabinet panel.
3. The unit shall be constructed on a rust proof unit base that has an externally trapped, integrated sloped drain.
4. Indoor fan compartment top surface shall be insulated with a minimum 1/2-in. thick, flexible fiberglass insulation, coated on the air side and retained by adhesive and mechanical means. The indoor wall sections will be insulated with a minimum semi-rigid, foil-faced board capable of being wiped clean. Aluminum foil-faced fiberglass insulation shall be used in the entire indoor air cavity section.
5. Unit shall have a field-supplied condensate trap.
6. Metal Insulated Duct Covers for side discharge will be standard on all sizes.
7. Unit insulation conforms to ASHRAE 62P.

C. Fans:

1. The indoor fan shall be 3-speed, direct-drive, as shown on equipment drawings.
2. Fan wheel shall be made from steel and shall be double-inlet type with forward-curved blades with corrosion resistant finish. Fan wheel shall be dynamically balanced.
3. Outdoor fan shall be direct-drive, propeller-type with aluminum blades riveted to corrosion resistant steel spiders, be dynamically balanced, and discharge air vertically.

D. Compressor:

1. Fully hermetic compressors with factory-installed vibration isolation.
2. Scroll compressors shall be standard on all units.
3. Compressor Protection:
   Defrost control shall protect compressor by preventing "short cycling."

E. Coils:

Indoor and outdoor coils shall have aluminum plate fins mechanically bonded to seamless copper tubes with all joints brazed. (Copper/copper and vinyl-coated construction available as option.) Tube sheet openings shall be belled to prevent tube wear.

F. Refrigerant Metering Device:
Refrigerant metering device shall be of the fixed orifice feed type.

G. Filters:
Filter section shall consist of field-installed, throwaway, 1-in.-thick fiberglass filters of commercially available sizes.

H. Controls and Safeties:

1. Unit controls shall be complete with a self-contained, low-voltage control circuit.
2. Units shall incorporate an internal compressor protector that provides reset capability.

I. Operating Characteristics:

1. Unit shall be capable of starting and running at 125°F (51.7°C) ambient outdoor temperature per maximum load criteria of ARI Standard 240-94.
2. Compressor with standard controls shall be capable of operation down to 40°F (4.4°C) ambient outdoor temperature in cooling mode.
3. Unit shall be provided with 30-second fan time delay after the thermostat is satisfied.

J. Electrical Requirements:
All unit power wiring shall enter the unit cabinet at a single location.

K. Motors:

1. Compressor motors shall be of the refrigerant-cooled type with line-break thermal and current overload protection.
2. All fan motors shall have permanently lubricated bearings, and inherent, automatic reset, thermal overload protection.
3. Condenser fan motor shall be totally enclosed.

L. Special Features Available:

1. Louvered Grille:
   Wire grille shall be standard on all units. Louvered grille shall be available as a factory-installed option to provide hail guard and vandalism protection.

2. Coil Options:
   Shall include factory-installed optional copper/copper and vinyl-coated refrigerant coils.
3. Economizer:
   a. Economizer controls capable of providing free cooling using outside air.
   b. Equipped with low leakage dampers not to exceed 3% leakage, at 1.0 in. wc pressure differential.
   c. Spring return motor shuts off outdoor damper on power failure.
4. Flat Roof Curb:
   Curbs shall have seal strip and a wood nailer for flashing and shall be installed per manufacturer's instructions.
5. Manual Outdoor Air Damper:
   Package shall consist of damper, birdscreen, and rainhood which can be preset to admit outdoor air for year-round ventilation.
6. Thermostat:
   To provide for one-stage heating and cooling in addition manual or automatic changeover and indoor fan control.
7. Natural-to-Propane Conversion Kit:
   Shall be complete with all required hardware to convert to propane gas operation at 3.5 in. wc manifold pressure.
8. Propane-to-Natural Conversion Kit:
   Shall be complete with all hardware to convert to natural gas at standard altitude (0 to 2000 ft above sea level).
9. Low Ambient Package:
   Shall consist of a solid-state control and outdoor coil temperature sensor for controlling outdoor-fan motor operation, which shall allow unit to operate down to 0°F outdoor ambient temperature.
10. Filter Rack Kit:
    Shall provide filter mounting for downflow applications.
11. Compressor Protection:
    Solid-state control shall protect compressor by preventing "short cycling."
12. Square-To-Round Duct Transitions (024-048):
    Shall have the ability to convert the supply and return openings from rectangular to round.
13. Crankcase Heater:
    Shall provide anti-floodback protection for lowload cooling applications.
14. Low NOx:
    Shall provide NOx reduction to values below 40 nanograms/joule to meet California emission requirements as shipped from factory.
15. Electric heaters:
    a. Electric heater shall be available as a fieldinstalled option.
    b. Heater elements shall be open wire type, adequately supported and insulated with ceramic bushings.
    c. Electric heater packages must provide single point power connection capability.

Copyright 2007 Carrier Corp. • 7310 W. Morris St. • Indianapolis, IN 46231
Printed in U.S.A. Edition Date: 04/07 **Catalog No: 48EZ-1PD**

Manufacturer reserves the right to change, at any time, specifications and designs without notice and without obligations.
Replaces: New