538R*R
Outdoor Unit Ductless System
Sizes 36 to 48

Installation Instructions

NOTE: Read the entire instruction manual before starting the installation.

NOTE: Image for illustration purposes only. Actual model may be slightly different.

TABLE OF CONTENTS

	PAGE
SAFETY CONSIDERATIONS	2
PARTS LIST	3
SYSTEM REQUIREMENTS	4
DIMENSIONS – OUTDOOR	5
CLEARANCES – OUTDOOR	5
INSTALLATION TIPS	8
OUTDOOR UNIT INSTALLATION	8
ELECTRICAL DATA	10
CONNECTION DIAGRAMS	10
START–UP	10
TROUBLESHOOTING	10

SAFETY CONSIDERATIONS

Installing, starting up, and servicing air−conditioning equipment can be hazardous due to system pressures, electrical components, and equipment location (roofs, elevated structures, etc.).

Only trained, qualified installers and service mechanics should install, start−up, and service this equipment.

Untrained personnel can perform basic maintenance functions such as cleaning coils. All other operations should be performed by trained service personnel.

When working on the equipment, observe precautions in the literature and on tags, stickers, and labels attached to the equipment.

Follow all safety codes. Wear safety glasses and work gloves. Keep quenching cloth and fire extinguisher nearby when brazing. Use care in handling, rigging, and setting bulky equipment.

Read these instructions thoroughly and follow all warnings or cautions included in literature and attached to the unit. Consult local building codes and National Electrical Code (NEC) for special requirements. Recognize safety information. This is the safety−alert symbol ⚠. When you see this symbol on the unit and in instructions or manuals, be alert to the potential for personal injury. Understand these signal words: DANGER, WARNING, and CAUTION. These words are used with the safety−alert symbol. DANGER identifies the most serious hazards which **will** result in severe personal injury or death. WARNING signifies hazards which **could** result in personal injury or death. CAUTION is used to identify unsafe practices which **may** result in minor personal injury or product and property damage. NOTE is used to highlight suggestions which **will** result in enhanced installation, reliability, or operation.

⚠ WARNING

ELECTRICAL SHOCK HAZARD

Failure to follow this warning could result in personal injury or death.

Before installing, modifying, or servicing system, main electrical disconnect switch must be in the OFF position. There may be more than 1 disconnect switch. Lock out and tag switch with a suitable warning label.

⚠ WARNING

EXPLOSION HAZARD

Failure to follow this warning could result in death, serious personal injury, and/or property damage.

Never use air or gases containing oxygen for leak testing or operating refrigerant compressors. Pressurized mixtures of air or gases containing oxygen can lead to an explosion.

⚠ CAUTION

EQUIPMENT DAMAGE HAZARD

Failure to follow this caution may result in equipment damage or improper operation.

Do not bury more than 36 in. (914 mm) of refrigerant pipe in the ground. If any section of pipe is buried, there must be a 6 in. (152 mm) vertical rise to the valve connections on the outdoor units. If more than the recommended length is buried, refrigerant may migrate to the cooler buried section during extended periods of system shutdown. This causes refrigerant slugging and could possibly damage the compressor at start−up.

PARTS LIST

Part No.	Name of Part	Qty
1	Oudoor Unit	1
-	Literature package including installation instructions and warranty	1
-	Grommett to help fix the outdoor unit (helps with vibration prevention during operation)	4
-	Drain Hose and Drain Joint	1

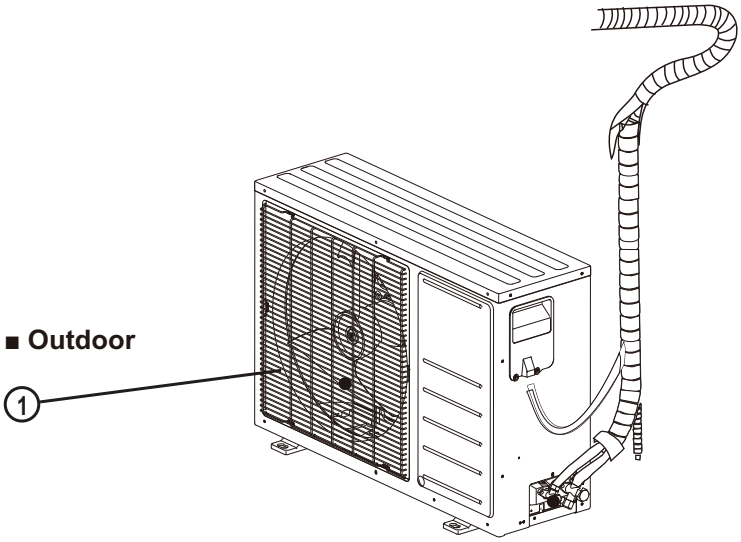

A150766

Fig. 1 – Parts List

The following units are covered in these installation instructions.

Table 1—Unit Sizes

SYSTEM TONS	BTUh	VOLTAGE – PHASE	OUTDOOR MODEL
3	36,000	208/230–1	538REQ036RBMA
4	48,000	208/230–1	538REQ048RBMA

SYSTEM REQUIREMENTS

Allow sufficient space for airflow and service of the unit. See Fig. 5 for the required minimum distances between the unit, walls or ceilings.

Piping

IMPORTANT: **Both refrigerant lines must be insulated separately.**

- Table 2 contains piping information for the product covered within this document.

Table 2—Piping And Refrigerant Information

	SYSTEM SIZE		36K	48K
Piping	Min. Piping Length	ft(m)	10(3)	10(3)
	Standard Piping Length	ft(m)	25(7.5)	25(7.5)
	Max. outdoor−indoor height difference (OU higher than IU)	ft(m)	98(30)	98(30)
	Max. outdoor−indoor height difference (IU higher than OU)	ft(m)	98(30)	98(30)
	Max. Piping length with no additional refrigerant charge	ft(m)	26(8)	26(8)
	Max. Piping Length	ft(m)	213(65)	213(65)
	Additional refrigerant charge (between Standard − Max piping length)	Oz/ft(g/m)	0.43(40)	0.43(40)
	Gas Pipe (size−connection type)	in(mm)	5/8(16)	5/8(16)
	Liquid Pipe (size−connection type)	in(mm)	3/8(9.52)	3/8(9.52)
Refrigerant	Refrigerant Type	−−	R410A	R410A
	Charge Amount	Lbs(kg)	7.5(3.4)	9.48(4.3)

All outdoor units have an electronic expansion valve to manage the refrigerant flow of the fan coil connected.

Wiring

All wires must be sized per NEC (National Electrical Code) or CEC (Canadian Electrical Code) and local codes. Use the Electrical Data table MCA (minimum circuit amps) and MOCP (maximum over current protection) to correctly size the wires and the disconnect fuse or breakers respectively.

Per caution note, only stranded copper conductors with a 600 volt rating and double insulated copper wire must be used. The use of BX cable is not recommended.

Recommended Connection Method for Power and Communication Wiring −− Power and Communication Wiring:

The main power is supplied to the outdoor unit. The field supplied 14/3 power/communication wiring from the outdoor unit to the indoor unit consists of four (4) wires and provides the power for the indoor unit. Two wires are high voltage AC power, one is communication wiring and the other is a ground wire.

Recommended Connection Method for Power and Communication Wiring (To minimize communication wiring interference) Power Wiring:

The main power is supplied to the outdoor unit. The field supplied power wiring from the outdoor unit to the indoor unit consists of three (3) wires and provides the power for the indoor unit. Two wires are high voltage AC power and one is a ground wire.

To minimize voltage drop, the factory recommended wire size is 14/2 stranded with a ground.

Communication Wiring:

A separate shielded stranded copper conductor only, with a 600 volt rating and double insulated copper wire, must be used as the communication wire from the outdoor unit to the indoor unit. Please use a separate shielded 16GA stranded control wire.

⚠ CAUTION

EQUIPMENT DAMAGE HAZARD

Failure to follow this caution may result in equipment damage or improper operation.

- Wires should be sized based on NEC and local codes.
- Use copper conductors only with a minimum 600 volt rating and double insulated copper wire.

DIMENSIONS – OUTDOOR

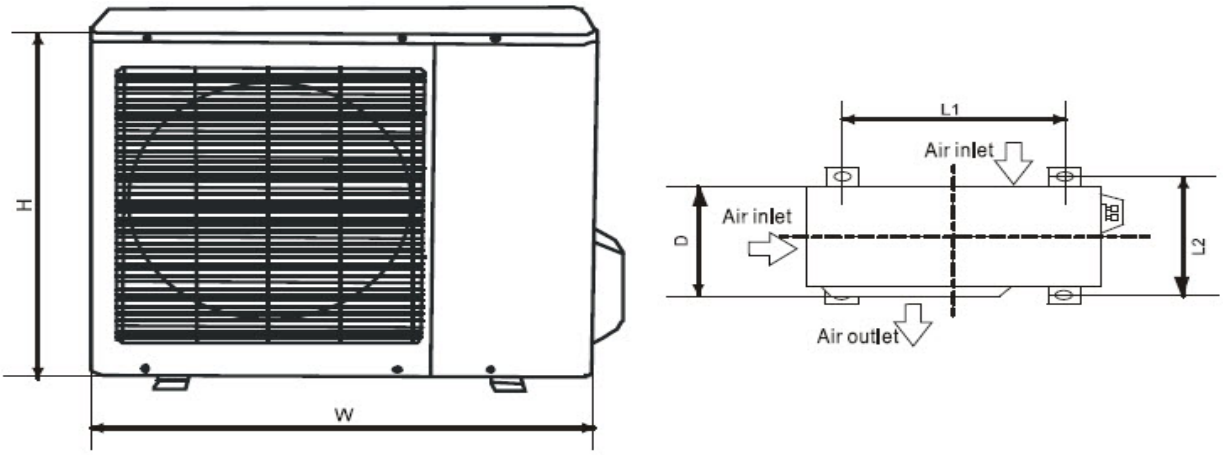

Fig. 2 – Outdoor Unit

UNIT SIZE	W in (mm)	D in (mm)	H in (mm)	L1 in (mm)	L2 in (mm)	OPERATING WEIGHT lb (kg)
36K	37.2(945)	15.5(395)	31.8(810)	25.2(640)	15.9(405)	137.5(62.4)
48K	36.93(938)	15.4(392)	53.9(1369)	24.9(634)	15.9(404)	220(100)

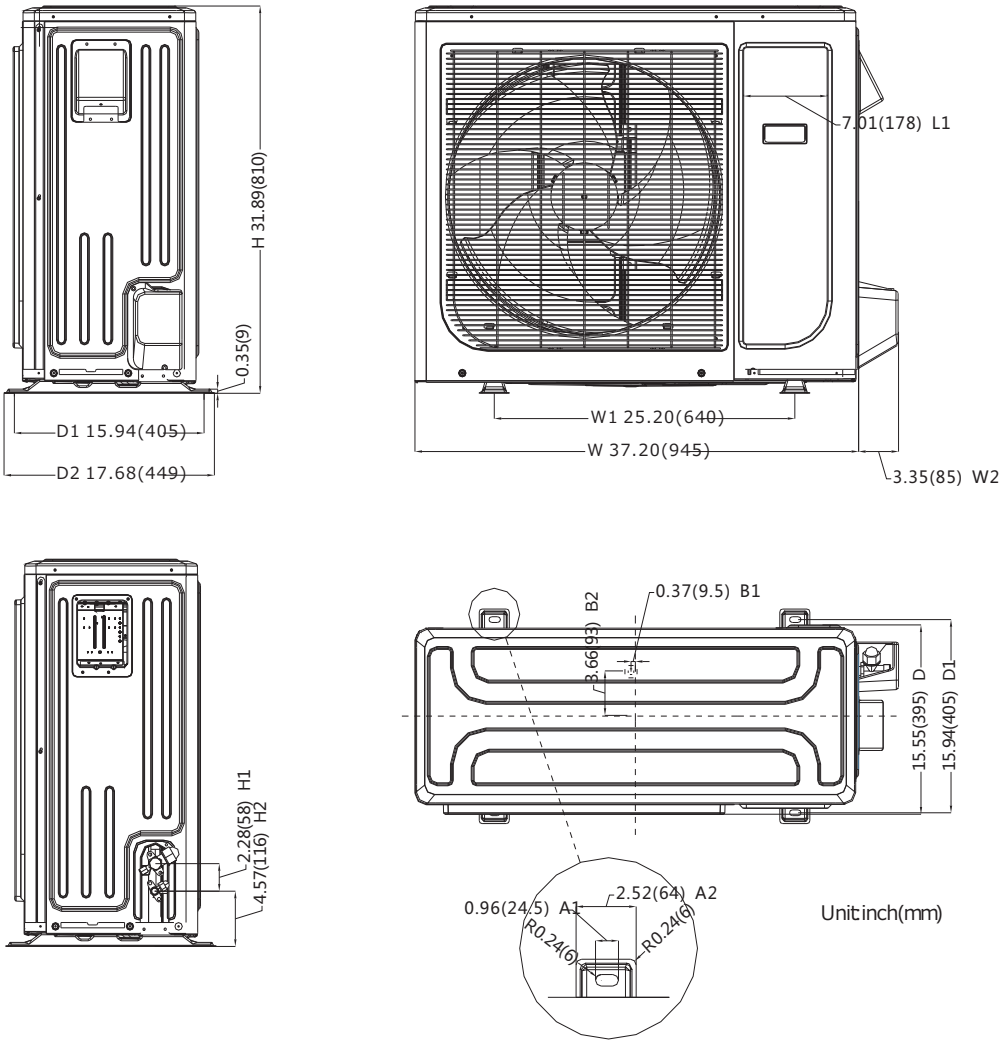

Fig. 3 – Sizes 36K

DIMENSIONS – OUTDOOR (CONT)

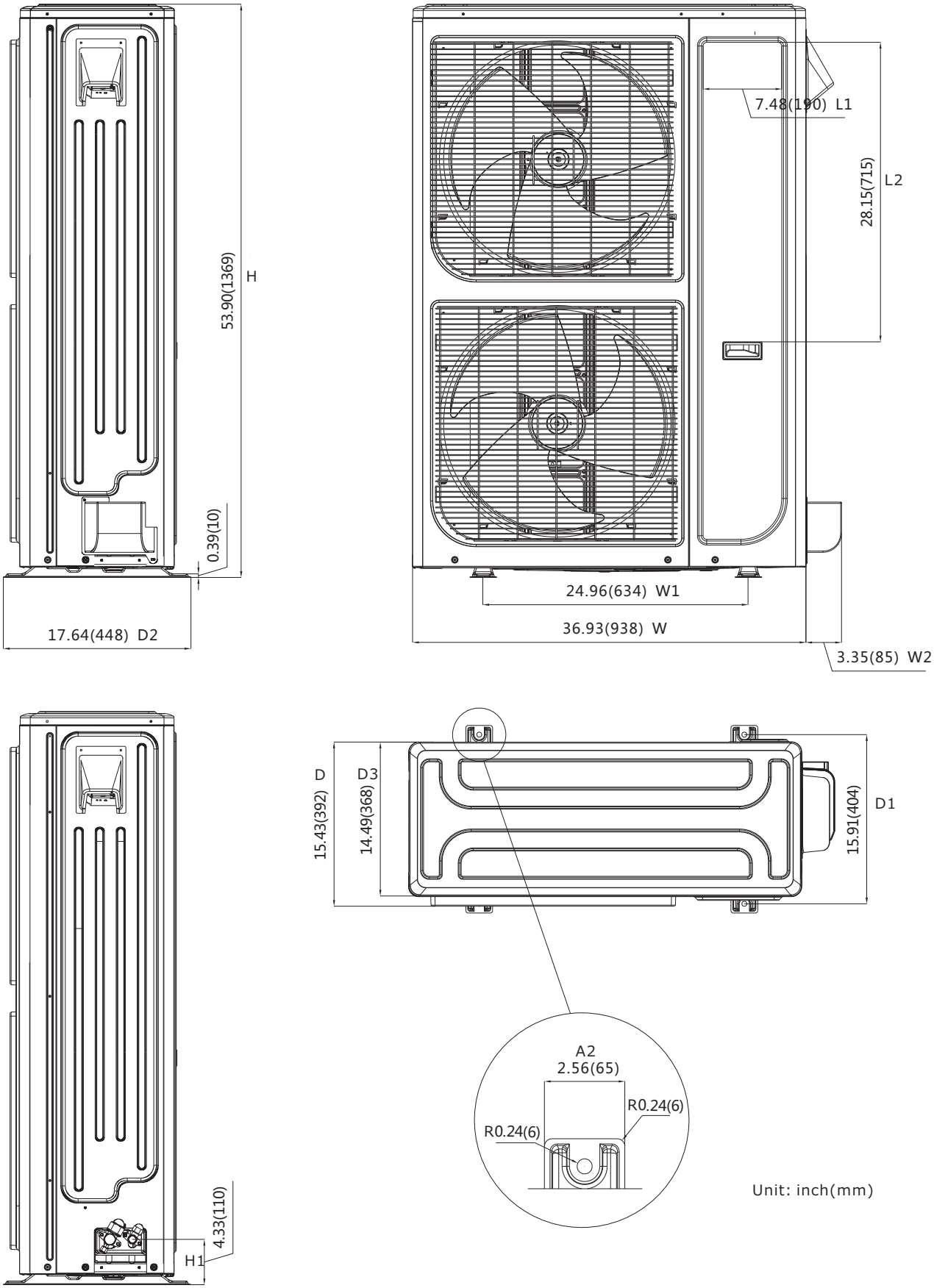

Fig. 4 – Sizes 48K

CLEARANCES – OUTDOOR

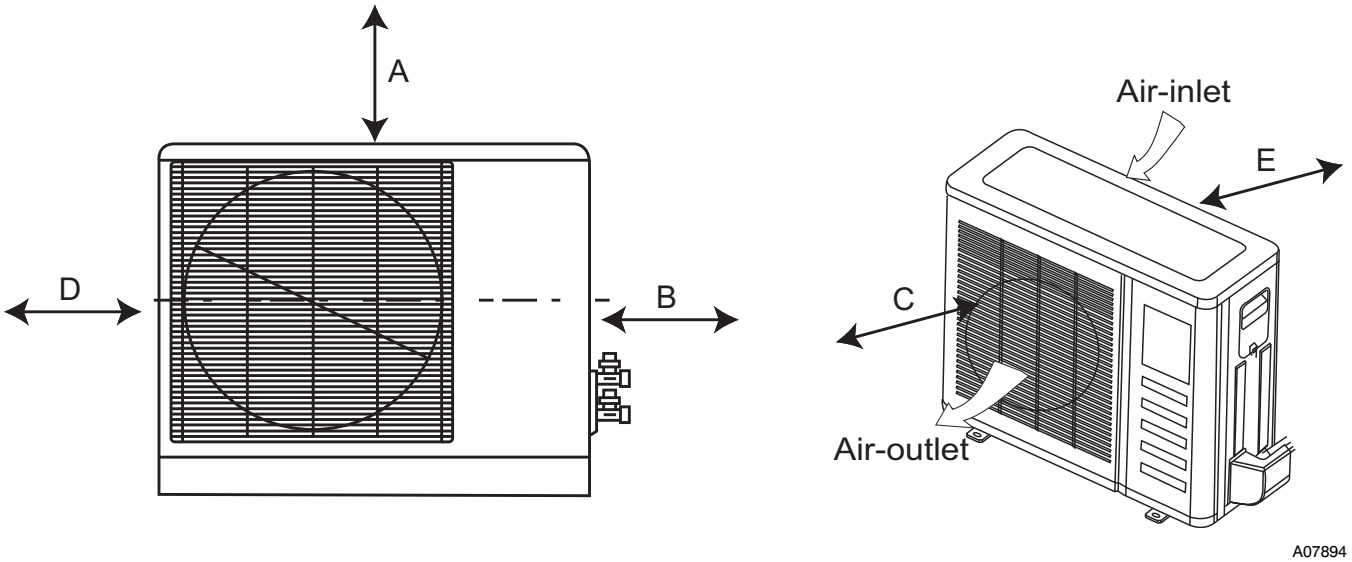

Fig. 5 – Outdoor Unit Clearance

Table 3—Outdoor Unit Clearance Dimensions

UNIT	MINIMUM VALUE in. (mm)
A	24 (610)
B	24 (610)
C	24 (610)
D	4 (101)
E	4 (101)

INSTALLATION TIPS

Ideal installation locations include:

Outdoor Unit

- A location which is convenient to installation and not exposed to strong wind.
- A location which can bear the weight of outdoor unit and where the outdoor unit can be mounted in a level position.
- A location which provides appropriate clearances (see Fig. 5).
- Do not install the indoor or outdoor units in a location with special environmental conditions. For those applications, contact your Ductless representative.

OUTDOOR UNIT INSTALLATION

1. Use a rigid base to support unit in a level position.
2. Locate outdoor unit and connect piping and wiring.

⚠ CAUTION

EQUIPMENT DAMAGE HAZARD

Failure to follow this caution may result in equipment damage or improper operation.

In regions with snowfall and cold temperatures, avoid installing the outdoor unit in areas where it can be covered by snow. If the outdoor unit is installed in areas where heavy snow is expected, a field supplied ice or snow stand and/or field supplied–installed wind baffle should be installed to protect the unit from snow accumulation and/or blocked air intake. Blocking the air intake may result in reduced airflow, significantly reduced performance and damage to the equipment.

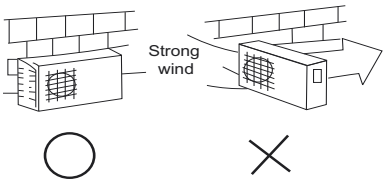

A07350

Fig. 6 — High Wind Installation

MAKE REFRIGERANT PIPING CONNECTIONS (OUTDOOR UNIT)

IMPORTANT: Use refrigeration grade tubing ONLY. No other type of tubing may be used. Use of other types of tubing will void manufacturer's warranty.

Do not open service valves or remove protective caps from tubing ends until all the connections are made.

Bend tubing with bending tools to avoid kinks and flat spots.

Keep the tubing free of dirt, sand, moisture, and other contaminants to avoid damaging the refrigerant system.

Avoid sags in the suction line to prevent the formation of oil traps. Insulate each tube with minimum 3/8–in. (10 mm) wall thermal pipe insulation. Inserting the tubing into the insulation before making the connections will save time and improve installation quality.

1. Remove the service valve cover, if provided with the unit.
2. Cut the pipe, with a pipe cutter, at 90 degrees (see Fig. 7).
3. Remove the service connection, if provided with the unit.

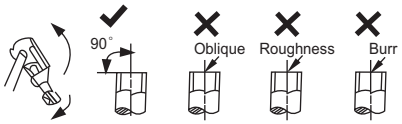

A150767

Fig. 7 — Cut the Pipe

4. Remove all the burrs from the cut cross section of the pipe avoiding any burrs inside the tubes.
5. Remove the flare nuts attached to the indoor and outdoor units.
6. Install the correct size flare nut onto the tubing and make a flare connection. Refer to Table 4 for the flare nut spaces.

Table 4—Flare Nut Spacing

OUTER DIAM. (mm)	A (mm)	
	Max.	Min.
Ø1/4"(6.35)	0.05 (1.3)	0.03(0.7)
Ø3/8"(9.52)	0.06 (1.6)	0.04(1.0)
Ø1/2"(12.7)	0.07 (1.8)	0.04(1.0)
Ø5/8"(15.88)	0.09 (2.2)	0.08(2.0)

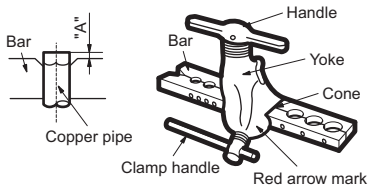

A150768

Fig. 8 — Flare Nut Spacing

7. Apply a small amount of refrigerant oil to the flare connection on the tubing.
8. Align center of the pipes and/or service valve.

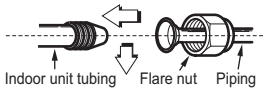

A150769

Fig. 9 — Align Pipe Center

9. Connect both the liquid and gas piping to the indoor unit
10. Tighten the flare nut using a torque wrench as specified in the Table 5.
11. Complete the installation.

Table 5—Tightening Torque

PIPE DIAMETER INCH (mm)	TIGHTENING TORQUE	
	Ft–lb	N–m
Ø1/4" (6.35)	10 to 13	13.6 to 17.6
Ø3/8" (9.52)	24 to 31	32.5 to 42.0
Ø1/2" (12.7)	37 to 46	50.1 to 62.3
Ø5/8" (15.88)	50 to 60	67.7 to 81.3

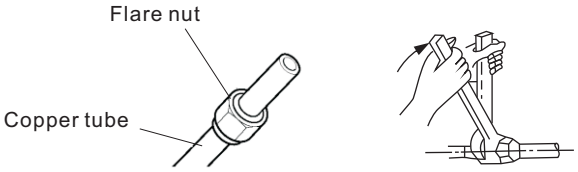

A150770

Fig. 10 — Tighten the Flare Nut

⚠ CAUTION

EQUIPMENT DAMAGE HAZARD

Failure to follow this caution may result in equipment damage or improper operation.

Excessive torque can break flare nut depending on installation conditions.

INSTALL ALL POWER AND INTERCONNECTING WIRING TO OUTDOOR UNITS

1. Mount outdoor power disconnect.
2. Run power wiring from main box to disconnect per NEC and local codes.
3. Remove field wiring cover from unit by loosening screws.
4. Remove caps on conduit panel.
5. Connect conduit to conduit panel (see Fig.11).
6. Properly connect both power supply and control lines to terminal block per the connection diagram for the appropriate unit capacity and voltage.
7. Ground unit in accordance with NEC and local electrical codes.
8. Use lock nuts to secure conduit.
9. Reinstall field wiring cover.

⚠ CAUTION

EQUIPMENT DAMAGE HAZARD

Failure to follow this caution may result in equipment damage or improper operation.

- Be sure to comply with local codes while running wire from indoor unit to outdoor unit.
- Every wire must be connected firmly. Loose wiring may cause terminal to overheat or result in unit malfunction. A fire hazard may also exist. Therefore, be sure all wiring is tightly connected.
- No wire should be allowed to touch refrigerant tubing, compressor or any moving parts.
- Disconnecting means must be provided and shall be located within sight and readily accessible from the air conditioner.
- Connecting cable with conduit shall be routed through hole in the conduit panel.

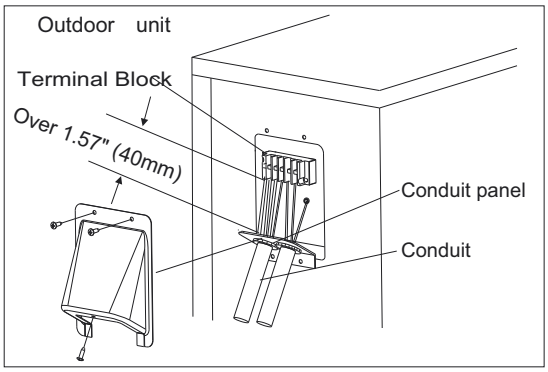

A07455

Fig. 11 – Field Wiring

DRAIN CONNECTIONS

Install drains must meet local sanitation codes.

Install the outdoor unit drain joint

Fit the seal into the drain joint, then insert the drain joint into the base pan hole of the outdoor unit. Rotate 90° to securely assemble them. Connect the drain joint with an extension drain hose to avoid condensate from draining off the outdoor unit during the heating mode.

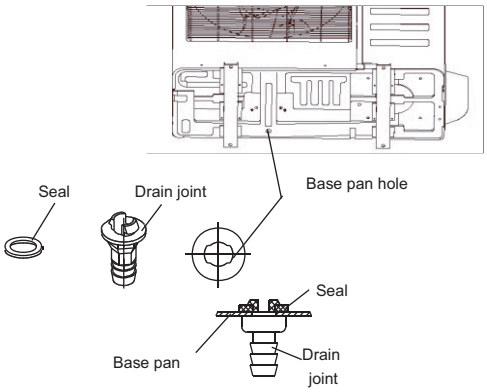

Fig. 12 – Drain Joint

Images are for illustration purposes only.

ELECTRICAL DATA

Table 6—Electrical Data

OUTDOOR UNIT SIZE		36K	48K
Power Supply	Volts—PH—Hz	208/230—1—60	208/230—1—60
	Max – Min* Oper. Voltage	253—187	253—187
	MCA	30	35
	Max Fuse/ CB AMP	50	55
Compressor	Volts—PH—Hz	208/230—1—60	208/230—1—60
	RLA	13.5	13.4
Outdoor Fan Motor	FLA	3	3
	Rated HP	0.16	0.11
	Output	120	85

*Permissible limits of the voltage range at which the unit will operate satisfactorily.

LEGEND

FLA — Full Load Amps

MCA — Minimum Circuit Amps

RLA — Rated Load Amps

CONNECTION DIAGRAMS

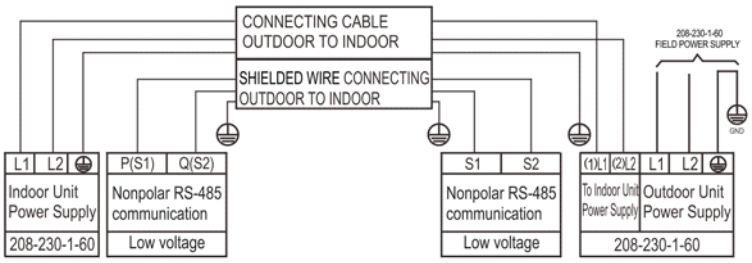

A150688

Fig. 13 — Connection Diagrams

Notes:
1. Do not use the thermostat wire for any connection between indoor and outdoor units.
2. All connections between indoor and outdoor units must be as shown. **The connections are sensitive to polarity and will result in a fault code.**

SYSTEM VACUUM AND CHARGE

⚠ CAUTION

UNIT DAMAGE HAZARD

Failure to follow this caution may result in equipment damage or improper operation.

Never use the system compressor as a vacuum pump.

Refrigerant tubes and the indoor coil should be evacuated using the recommended 500 microns deep vacuum method. The alternate triple evacuation method may be used if the procedure outlined below is followed.

NOTE: Always break a vacuum with dry nitrogen.

Using Vacuum Pump

1. Completely tighten flare nuts A, B, C, D, connect manifold gage charge hose to a charge port of the low side service valve (see Fig. 14).
2. Connect charge hose to vacuum pump.
3. Fully open the low side of manifold gage (see Fig. 15).
4. Start the vacuum pump.
5. Evacuate using either deep vacuum or triple evacuation method.
6. After evacuation is complete, fully close the low side of manifold gage and stop operation of vacuum pump.
7. The factory charge contained in the outdoor unit is good for up to 25 ft. (8 m) of line length. For refrigerant lines longer than 25 ft. (8 m), add refrigerant, up to the allowable length, as specified in the System Requirements section.
8. Disconnect the charge hose from charge connection of the low side service valve.
9. Fully open service valves B and A.
10. Securely tighten caps of service valves.

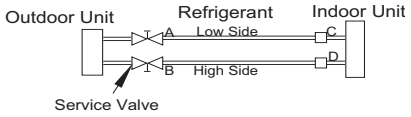

A07360

Fig. 14 — Service Valve

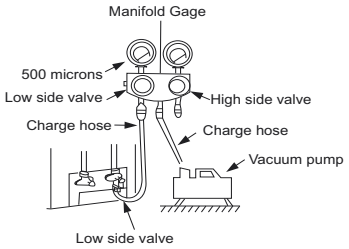

A07361

Fig. 15 — Manifold

Deep Vacuum Method

The deep vacuum method requires a vacuum pump capable of pulling a vacuum of 500 microns and a vacuum gage capable of accurately measuring this vacuum depth. The deep vacuum method is the best way to assure a system is free of air and liquid water (see Fig. 16).

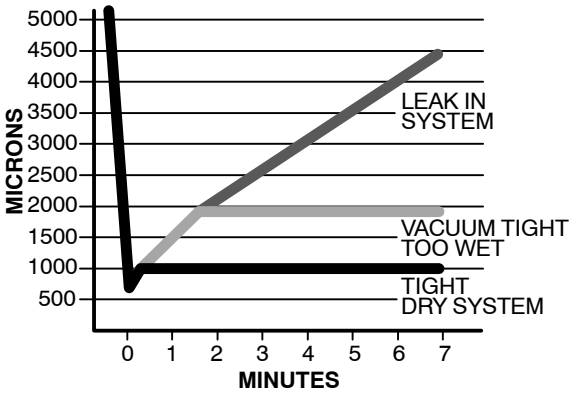

A95424

Fig. 16 — Deep Vacuum Graph

Triple Evacuation Method

The triple evacuation method should only be used when vacuum pump is only capable of pumping down to 28 in. of mercury vacuum and system does not contain any liquid water.

Refer to Fig. 17 and proceed as follows:

1. Pump system down to 28 in. of mercury and allow pump to continue operating for an additional 15 minutes.
2. Close service valves and shut off vacuum pump.
3. Connect a nitrogen cylinder and regulator to system and open until system pressure is 2 psig.
4. Close service valve and allow system to stand for 1 hr. During this time, dry nitrogen will be able to diffuse throughout the system absorbing moisture.
5. Repeat this procedure as indicated in Fig. 17. System will then be free of any contaminants and water vapor.

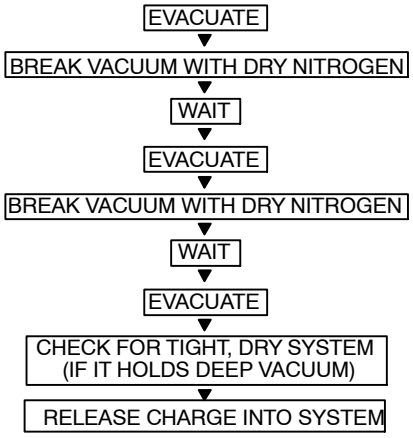

A95425

Fig. 17 — Triple Evacuation Method

Final Tubing Check

IMPORTANT: Check to be certain factory tubing on both indoor and outdoor unit has not shifted during shipment. Ensure tubes are not rubbing against each other or any sheet metal. Pay close attention to feeder tubes, making sure wire ties on feeder tubes are secure and tight.

START−UP

Test Operation

Perform test operation after completing gas leak and electrical safety check. See the indoor unit installation instructions and owner's manual for additional start up information.

SYSTEM CHECKS

1. Conceal the tubing where possible.
2. Make sure that the drain tube slopes downward along its entire length.
3. Ensure all tubing and connections are properly insulated.
4. Fasten tubes to the outside wall, when possible.
5. Seal the hole through which the cables and tubing pass.

OUTDOOR UNIT

1. Are there unusual noises or vibrations during operation?

Explain the Following Items To Customer (with the aid of the Owner's Manual):

1. Explain care and maintenance.
2. Present the installation instructions to customer.

TROUBLESHOOTING

For ease of service, the systems are equipped with diagnostic code display LEDs on both the indoor and outdoor units. The outdoor diagnostic display is two LEDs (Red and Green) on the outdoor unit board and is limited to very few errors. The indoor diagnostic display is a combination of flashing LEDs on the display panel or the front of the unit.

There may be a few error codes displayed in the indoor unit that might relate to the outdoor unit's problems. If possible, always check the diagnostic codes displayed on the indoor unit first.

The diagnostic codes displayed in the outdoor units are listed in Table 7.

Table 7—Indoor Unit Diagnostic Guides

OPERATION LAMP	TIMER LAMP	DISPLAY	LED STATUS
★ 1 time	X	E0	Indoor unit EEPROM parameter error
★ 2 times	X	E1	Indoor / outdoor units communication error
★ 3 times	X	E2	Zero−crossing signal detection error
★ 4 times	X	E3	Indoor fan speed has been out of control
★ 5 times	X	E4	Indoor room temperature sensor T1 open circuit or short circuit
★ 6 times	X	E5	Evaporator coil temperature sensor T2 open circuit or short circuit
★ 7 times	X	EC	Refrigerant leakage detection
★ 2 times	O	F1	Outdoor ambient temperature sensor T4 open circuit or short circuit
★ 3 times	O	F2	Condenser coil temperature sensor T3 open circuit or short circuit
★ 4 times	O	F3	Compressor discharge temperature sensor T5 open circuit or short circuit
★ 5 times	O	F4	Outdoor unit EEPROM parameter error
★ 6 times	O	F5	Outdoor fan speed has been out of control
★ 1 times	★	P0	IPM malfunction or IGBT over−strong current protection
★ 2 times	★	P1	Over voltage or over low voltage protection
★ 3 times	★	P2	High temperature protection of compressor top diagnosis and solution (only for 9k,12k models)
★ 5 times	★	P4	Inverter compressor drive error

O(light) X(off) ★(flash)

☆ = Flashing, X = Off

For additional diagnostic information, refer to the Service Manual

©2016 Bryant Heating & Cooling Systems ● 7310 W. Morris St. ● Indianapolis, IN 46231
Edition Date: 04/16 Catalog No. 538RR−01SI

Manufacturer reserves the right to discontinue, or change at any time, specifications or designs without notice and without incurring obligations.
Replaces: NEW