Installation, Service and Operating Instructions

Single coil, Indirect-fired Domestic Hot Water Storage Tank

Models CVWC53S2D3CMW, CVWC66S2D3CMW, CVWC79S2D3CMW

NOTES:
Read the entire instruction manual before starting the installation.

Images are for illustration purposes only. Actual models may differ slightly.

RECOGNIZED COMPONENT

Intertek
5029970
Conforms to UL STD 174
Certified to CSA STD C22.2#110

6217634 - 01 04/2025

Specifications subject to change without notice

About these Instructions

Take note of all symbols and notations intended to draw attention to potential hazards or important product information. These include "WARNING", "CAUTION", and "IMPORTANT". See below.

WARNING

Indicates an imminently hazardous situation which, if not avoided, could result in death, serious injury or substantial product/property damage.

▶ *Warnings draw your attention to the presence of potential hazards or important product information.*

CAUTION

Indicates an imminently hazardous situation which, if not avoided, may result in minor injury or product/property damage.

▶ *Cautions draw your attention to the presence of potential hazards or important product information.*

IMPORTANT

▶ *Helpful hints for installation, operation or maintenance which pertain to the product.*

▶

▶ *This symbol indicates that additional, pertinent Information is to be found.*

▶ *This symbol indicates that additional, pertinent Information is to be found.*

CAUTION

The heat transfer medium must be either potable water or contain only substances which are recognized as safe by the U.S. Food and Drug Administration.
The Pressure of the heat transfer medium must be maintained less than the normal minimum operating pressure of the potable water system.

CAUTION

The heat transfer medium must be water or other non-toxic fluid having a toxicity rating or class of 1, as listed in clinical toxicology of commercial products, 5th edition.
This tank version is not suitable for steam heating applications.
The pressure of the heat transfer medium must be limited to a maximum of 30 psig by an approved safety or relief valve.

Safety, Installation and Warranty Requirements

Please ensure that these instructions are read and understood before commencing installation. Failure to comply with the instructions listed below and details printed in this manual can cause product/property damage, severe personal injury, and/or loss of life. Ensure all requirements below are understood and fulfilled (including detailed information found in manual subsections).

▶ **Product documentation**

Read all applicable documentation before commencing installation. Store documentation near heat pump in a readily accessible location for reference in the future by service personnel.

▶ *For a listing of applicable literature, please see section entitled "Important Regulatory and Safety Requirements".*

▶ **Advice to owner**

Once the installation work is complete, the heating contractor must familiarize the system operator/ ultimate owner with all equipment, as well as safety precautions/requirements, shutdown procedure, and the need for professional service annually before the heating season begins.

▶ **Licensed professional heating contractor**

The installation, adjustment, service and maintenance of this equipment must be performed by a licensed professional heating contractor.

▶ *Please see section entitled "Important Regulatory and Installation Requirements".*

▶ **Warranty**

Information contained in this and related product documentation must be read and followed. Failure to do so renders the warranty null and void.

Important Regulatory Requirements

Codes
The installation of indirect-fired hot water storage tanks in heat pump application might be governed by individual local rules and regulations for this type of product, which must be observed. Always use latest editions of codes.

THIS TANK MEETS NSF/ANSI 372 FOR LOW LEAD CONTENT.

In the Commonwealth of Massachusetts, all plumbing work must be done by a licensed plumber or gas-fitter and for gas installations, all gas piping must be done by a licensed gas-fitter.

Mechanical room
Ensure the mechanical room complies with the requirements of the system design guideline and/or Technical Data Manual.
The tank must be installed in a mechanical room which is never subject to freezing temperatures. Ensure water in tank is drained if not in use and danger of freezing exists in the mechanical room.

▶ Please carefully read this manual prior to attempting installation. Any warranty is null and void if these instructions are not followed. This product must be installed observing not only the information and instruction provided in the pertinent product literature (see list on the following page), but also all local, provincial/state plumbing and building codes, as they apply to this product and all periphery equipment.

⚠ WARNING
If the heating system itself is to be filled with Glycol or any other antifreeze, the system fill must be of non-toxic or food grade antifreeze. In any circumstance, a non-toxic fluid must be used. Ensure a copy of the Safety Data Sheet (SDS) is supplied to the operator/ultimate owner of the system. The use of “Tyfocor-HTL” solar fill is recommended for the solar heating circuit.

⚠ CAUTION
The heating coil which is assembled with a rubber seal and glue in the tank is sensible to high temperatures. Exercise caution when welding and brazing: be sure not to exceed a temperature of 302°F (150°C) in the NPT fittings area.

Working on the equipment
The installation, adjustment, service, and maintenance of this equipment must be done by a licensed professional heating contractor who is qualified and experienced in the installation, service, and maintenance of hot water heating systems. There are no user serviceable parts on this equipment.

Ensure main power supply to equipment, the heating system, and all external controls has been deactivated. Close main oil or gas supply valve. Take precautions to avoid accidental activation of power during service work.

▶ The completeness and functionality of field supplied electrical controls and components must be verified by the heating contractor. These include low-water cut-offs, flow switches (if used), staging controls, pumps, motorized valves, air vents, thermostats, temperature controls, etc.

Important Regulatory Requirements

Instructing the system user
The installer of the system is responsible to ensure the system operator/ultimate owner is made familiar with the system functioning, its activation, and its shut-down. The operator/ultimate owner should also be instructed to complete and mail the warranty registration form in order to be eligible for limited warranty.

▶ The following topics must be covered: Proper system operation sequence. Explain the equipment as well as the need for combustion air. Demonstrate an emergency shut-down, what to do and what not. Explain that there is no substitute for proper maintenance to help ensure safe operation.

Initial startup
Initial start-up must be performed by a qualified heating contractor. Completion of the Maintenance Record by the heating contractor is also required.

▶ The Maintenance Record can be found in "Maintenance Record" on page 30 of this manual.

Operation
Please carefully read the operation and service sections of this manual prior to operation.
The installer of the system is responsible to ensure the system operator/ultimate owner is made familiar with the system functioning, its activation, and its shut-down. The operator/ultimate owner should also complete and mail the warranty registration form in order to be eligible for limited warranty.

▶ Failure to abide by all the requirements set out in the technical literature renders warranty null and void.

Technical literature
Literature applicable to all aspects of the DHW tank:
- Technical Data Manual
- Installation, Operating and Service Instructions

▶ Leave all literature at the installation site and advise the system operator/ultimate owner where the literature can be found.

Index

Safety

About these Instructions 2
Safety, Installation and Warranty Requirements 3
Important Regulatory Requirements 4

Table of Contents

Index 6

General Information

Product Information 7
Intended Use 7
Tank Setup 7

Installation

Unpacking and Handling 8
Transporting with Carrying Supports 9
Preparing for Installation 9
Connections 53 USG (200 L) 10
Installation Fittings 53 USG (200 L) 11
Connections 66 USG (250 L) and 79 USG (300 L) 12
Installation Fittings 66 USG (250 L) and 79 USG (300 L) 13
Removing the Hydronic Connection Protective Covers 14
Installation of the Adaptor Fittings 15
Impressed Current Anode 16
Tank Temperature Sensor 19
Fitting the Cosmetic Covers 20
Heating System Connections 21
Domestic Water Connections 22
Water Connections 23
Pressure Drop 24

Operating

Initial Start-up 26
Domestic Hot Water Production 26
Temperature and Pressure Relief Valve 27
Shutdown 27

Service

Shutting Down the Heating System 28
Check all Connections 28
Ensure Proper Operation of all Safety Devices 28
Clean Outside of the Tank 28
Place System into Operation Again 28
Cleaning the Inside of the Tank 29

Maintenance

Maintenance Record 30

Parts

Parts List 31

Product Information

CVWC53S2D3CMW 53 USG (200 L) capacity
CVWC66S2D3CMW 66 USG (250 L) capacity
CVWC79S2D3CMW 79 USG (300 L) capacity

Enamel coated indirect-fired domestic hot water storage tank with one heat exchanger coil for use with heat pumps, boilers, solar thermal systems, and low-temperature heating systems.

This tank version is not suitable for steam heating applications.

Intended Use

The appliance is intended to be installed and operated only in sealed unvented systems, with due attention paid to the associated installation, service and operating instructions. DHW tanks are designed to store and heat only water of potable quality. Heating water buffer cylinders are designed to hold only water of potable quality.

Intended use presupposes that a fixed installation in conjunction with permissible, system-specific components has been carried out.

Commercial or industrial usage for purposes other than heating a building or DHW shall be deemed inappropriate.

Any usage beyond this must be approved by the manufacturer in each individual case.

Incorrect usage or operation of the appliance (e.g. the appliance being opened by the system user) is prohibited and results in an exclusion of liability.

Incorrect usage also applies if components in the system are modified from their intended use (e.g. through direct DHW heating in the collector).

Adhere to statutory regulations, especially concerning the hygiene of potable water.

Tank Setup

⚠ CAUTION

Install the DHW tank in a frost-protected and draft-free room. Otherwise it must be drained when not in use, in order to reduce the risk of damages caused by freezing.

- Position tank carefully and remove packaging.
- Leave adequate clearance to the wall or other objects enabling easy access to the pressure relief valve.
- Install tank(s) on flooring or foundation capable of supporting the weight of the tank(s) filled with water.

Recommended service clearances

Rear		in. (mm)	18 (460)
Sides	May be reduced if rear pipe connections can be reached with less clearance	in. (mm)	12 (300)
Top		in. (mm)	12 (300)
Front		in. (mm)	29 (730)

Minimum clearances to combustibles

All sides	in. (mm)	0 (0)
Floor		Combustible

Unpacking and Handling

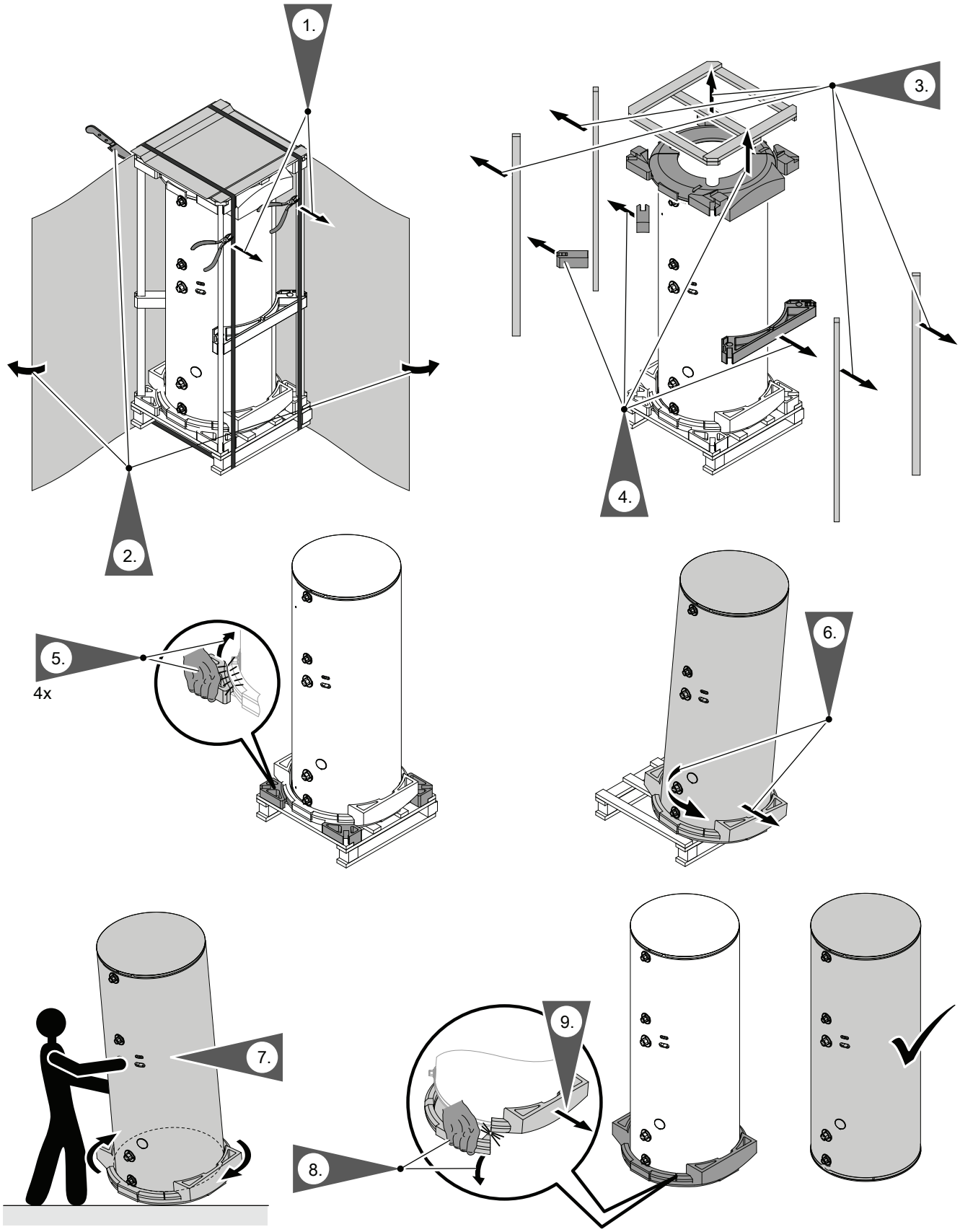

6217634 - 01

Transporting with Carrying Supports

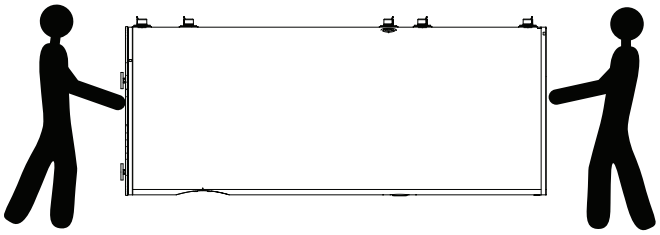

The DHW tank can be transported horizontally through the use of the integrated carrying handles. Two handles are located in the base of the tank and two handles are located at the top of the tank underneath the top panel. To access the top carrying remove the top panel and insulation pad and set aside to be reinstalled later.

Once unpacked, the DHW tank must be transported only by all of its carrying handles.

When using the carrying handles both handles must be used, failure to use both handles could result in damage to the DHW Tank.

Two people are required when transporting the DHW using the integrated carrying handles.

Preparing for Installation

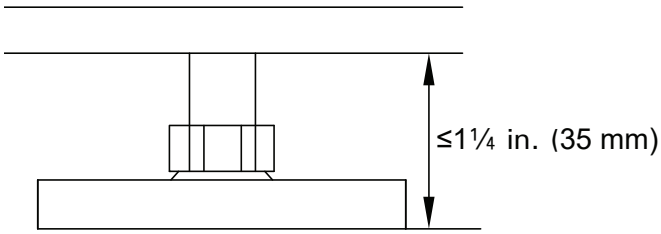

Use the adjustable feet to level the DHW tank.
Note
Only use one or two of the adjustable feet to level the DHW tank. At least one of the adjustable feet must remain fully screwed in.
Do not extend the adjustable feet beyond a length of 1-¼ in. (35 mm).

Connections 53 USG (200 L)

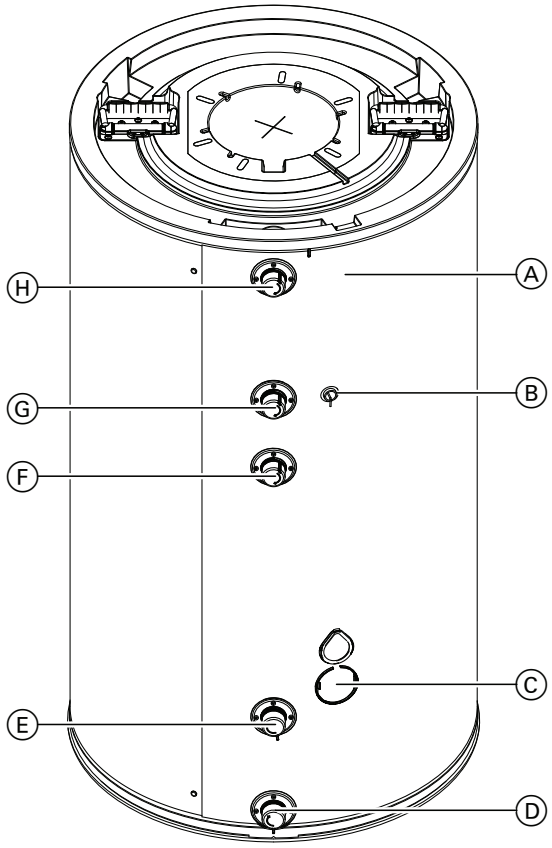

Rear

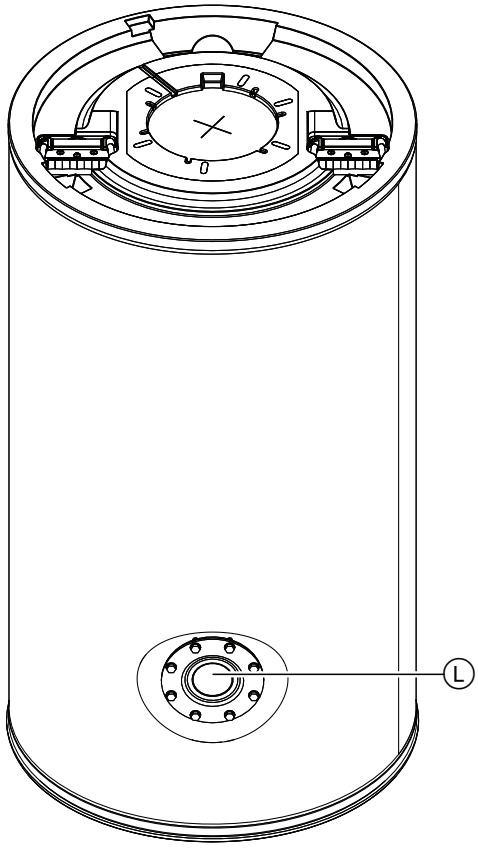

Front

Legend

Ⓐ Installation position for impressed current anode electronic unit
Ⓑ Sensor well for DHW tank temperature sensor
Ⓒ Injection process plug (do not open or connect anything)
Ⓓ DCW/drain
Ⓔ Heating system water return
Ⓕ DHW recirculation
Ⓖ Heating system water supply
Ⓗ DHW Outlet
Ⓛ Inspection and cleaning port with flange cover

Installation Fittings 53 USG (200 L)

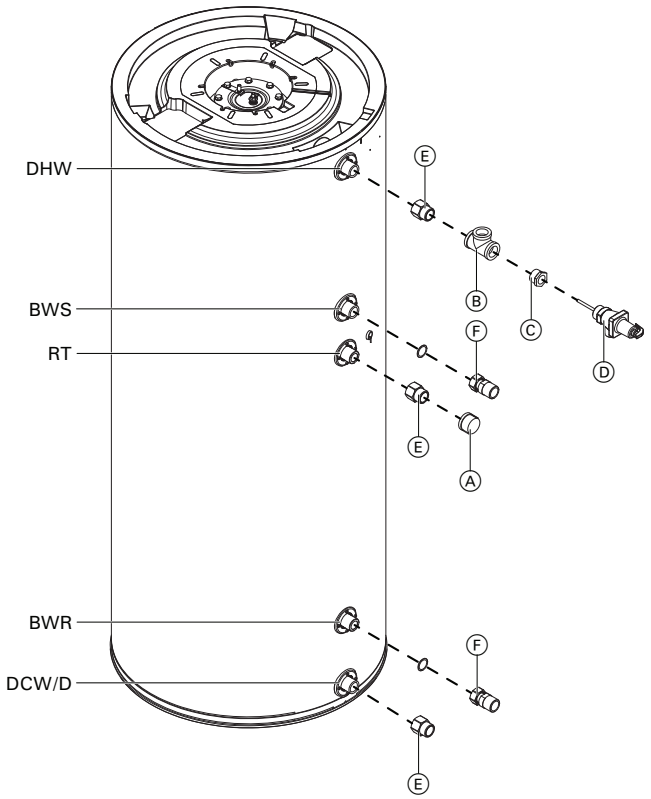

Supplied component sizes

Part	Size	Qty.
Ⓐ Cap	1 in. NPT	1
Ⓑ Tee	1 in. NPT	1
Ⓒ Reducing bushing	1 to ¾ in. NPT	1
Ⓓ Temperature and pressure relief valve	¾ in. NPT	1
Ⓔ Potable water adaptor	1 in BSPT to 1 in. NPT	3
Ⓕ Heating system water adaptor and gasket	1 in G to 1 in. NPT	2

Legend

DHW	Domestic Hot Water supply	1 in. (male NPT*1)
RT	Recirculation tapping (DHW)	1 in. (male NPT*1)
BWS	Boiler Water Supply	1 in. (male NPT*1)
BWR	Boiler Water Return	1 in. (male NPT*1)
DCW/D	Domestic Cold Water supply/Drain	1 in. (male NPT*1)

*1 With Adaptor Installed

Connections 66 USG (250 L) and 79 USG (300 L)

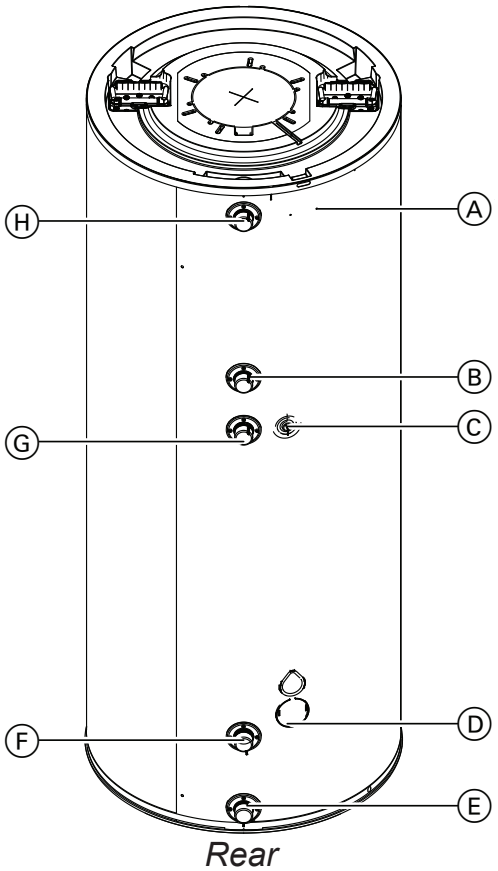

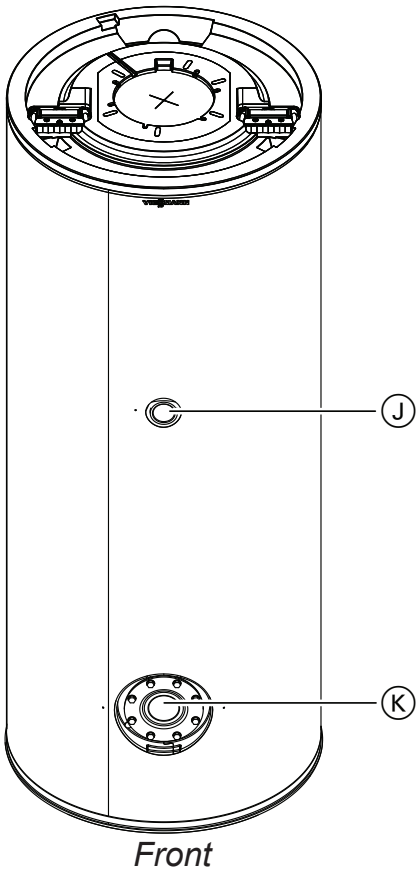

Legend

Ⓐ Installation position for impressed current anode electronic unit
Ⓑ DHW recirculation
Ⓒ Sensor well for tank temperature sensor
Ⓓ Injection process plug (do not open or connect anything)
Ⓔ DCW/drain
Ⓕ Heating system water return
Ⓖ Heating system water supply
Ⓗ DHW Outlet
Ⓙ Auxiliary Port
Ⓚ Inspection and cleaning port with flange cover

Installation Fittings 66 USG (250 L) and 79 USG (300 L)

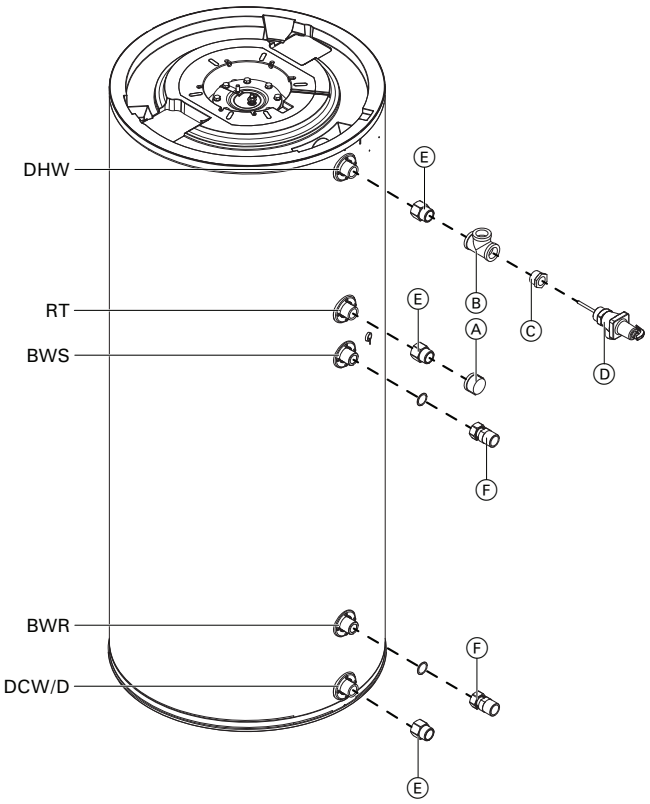

Supplied component sizes

Part	Size	Qty.
Ⓐ Cap	1 in. NPT	1
Ⓑ Tee	1 in. NPT	1
Ⓒ Reducing bushing	1 to ¾ in. NPT	1
Ⓓ Temperature and pressure relief valve	¾ in. NPT	1
Ⓔ Potable water adaptor	1 in BSPT to 1 in. NPT	3
Ⓕ Heating system water adaptor and gasket	1 in G to 1 in. NPT	2

Legend

DHW	Domestic Hot Water supply	1 in. (male NPT*1)
RT	Recirculation tapping (DHW)	1 in. (male NPT*1)
BWS	Boiler Water Supply	1 in. (male NPT*1)
BWR	Boiler Water Return	1 in. (male NPT*1)
DCW/D	Domestic Cold Water supply/Drain	1 in. (male NPT*1)

*1 With Adaptor Installed

Removing the Hydronic Connection Protective Covers

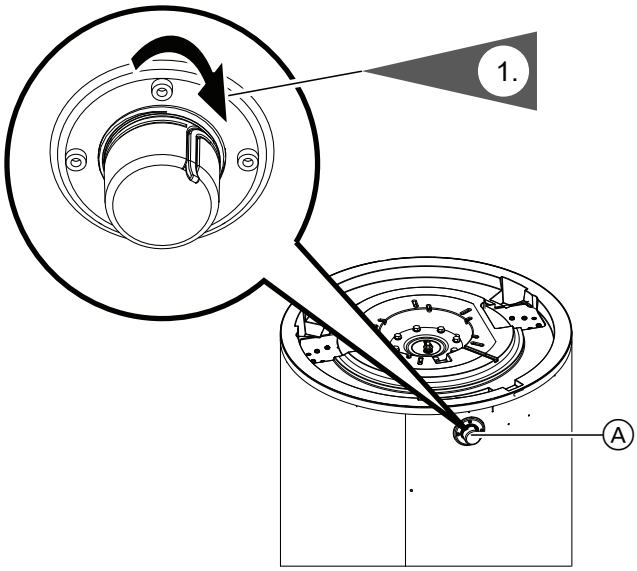

1. Pull up the protective cover by the plastic tab to expose the thread.

IMPORTANT

The protective covers are not watertight. Seal off any unused connections during installation.

Legend

Ⓐ Protective cover for threaded connections

Installation of the Adaptor Fittings

IMPORTANT

The DHW tank is supplied with three BSPT to NPT adaptors and two G to NPT adaptors, depending on the size of tank being installed refer to "Installation Fittings 53 USG (200 L)" on page 11 or "Installation Fittings 66 USG (250 L) and 79 USG (300 L)" on page 13 to verify installation position of the adaptors.

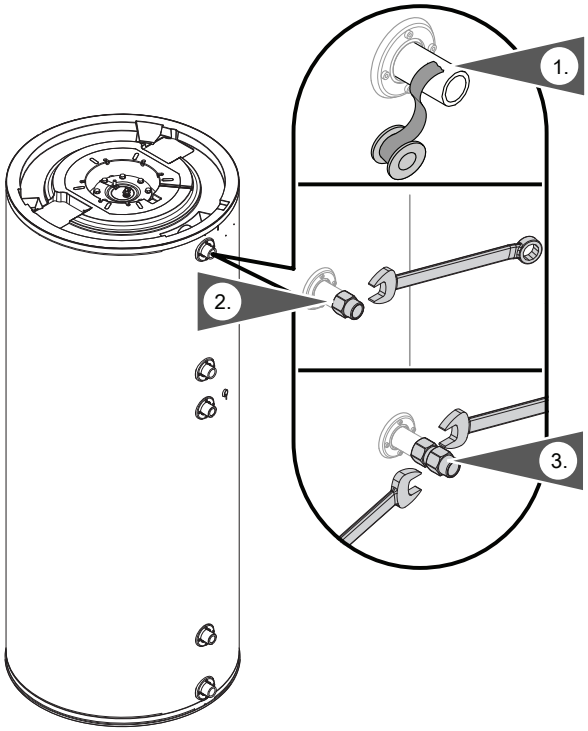

Installing BSPT to NPT Adaptors

1. Apply thread sealer to the tank connections prior to installing the adaptors.
2. Install the 1 inch BSPT to 1 inch NPT threaded adaptor the potable water connections of the tank - ensure not to overtighten the adaptor, overtightening could damage the glass lining voiding warranty.
3. Use the two-hand wrench method to tightening fittings or piping onto the adaptor. Use one wrench to prevent the adaptor from twisting and the second wrench to tighten the fitting or piping.
4. Repeat for the remaining BSPT to NPT adaptors.

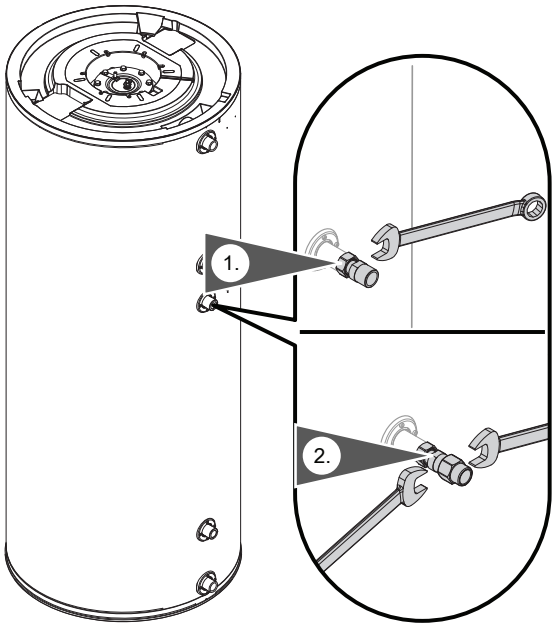

Installing G to NPT Adaptors

1. Using the gasket supplied with the adaptor install the 1 inch G to 1 inch NPT threaded adaptor the heating system water supply and return connections of the tank - ensure not to overtighten the adaptor, overtightening could damage the gasket.
2. Using the wrench flats near the thread of the adaptor, use the two-hand wrench method to tightening fittings or piping onto the adaptor. Use one wrench on the wrench flats to prevent the adaptor from twisting and the second wrench to tighten the fitting or piping.
3. Repeat for the remaining G to NPT adaptors.

Impressed Current Anode

The DHW tank is supplied with an impressed current anode, this anode is field installed.

Specifications:

Rated Voltage	100-240 VAC
Rated Current	0.5 W
Output Voltage	5 VDC
Output Current	50 mA

⚠ CAUTION

Contact with live components can lead to serious injury from electric current.

- Isolate the system from the power supply, e.g. by turning off the breaker; check that it is no longer live.
- Safeguard the system against re-connection.

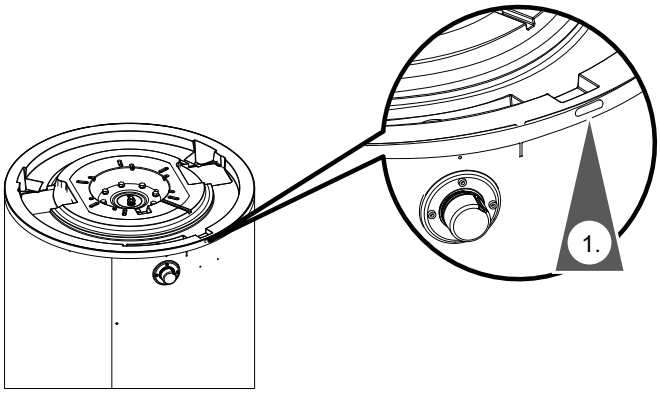

1. Using a sharp knife, cut away the Styrofoam insulation behind the cable relief slot located in the jacketing.

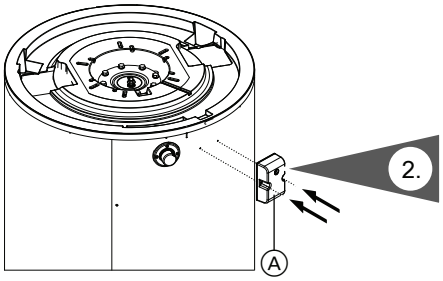

2. Mount the impressed current anode electronic unit to the jacketing of the DHW tank aligning the supplied screws with the pre-drilled holes in the jacketing.

   Legend

   Ⓐ Impressed current anode electronic unit

3. Route the cable for the impressed current anode

Impressed Current Anode

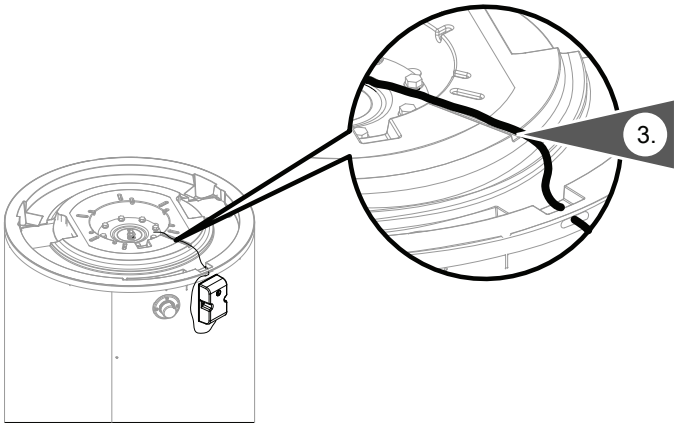

through the cable relief slot of the jacketing. Tuck the cable into the cable relief slot in the Styrofoam.

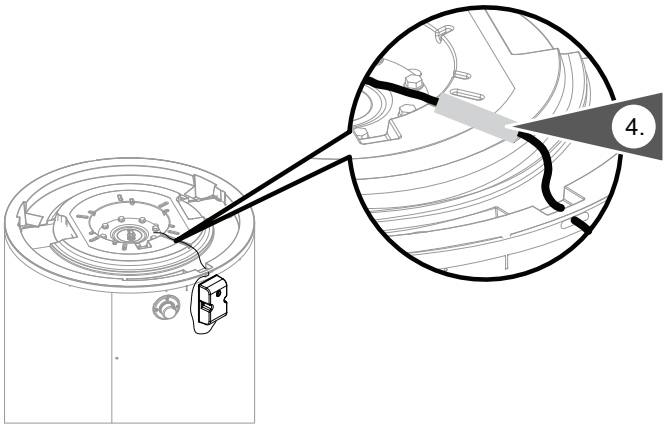

4. Once the cable for the impressed current anode has been routed through the cable relief slot, apply the supplied cable securing tape over the cable relief slot to ensure the cable remains in place and secured.

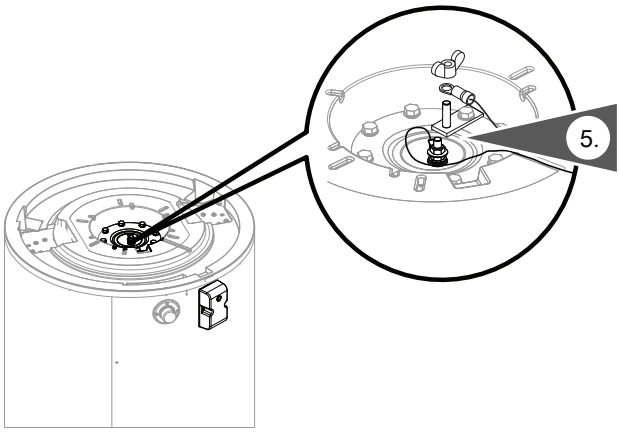

5. Connect the female spade connector of the cable to the male spade connector of the impressed current anode. Place the hoop connector over the threaded stud of the sensor tie down clamp and secure in place with the supplied wing nut.

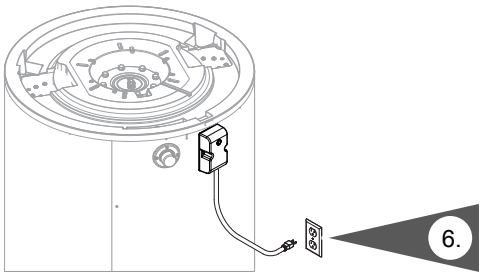

6. After filling the DHW tank, connect the impressed current anode electronic unit to the power supply. The impressed current anode electronic unit comes pre wired with a convenience plug for simplified installation.

Impressed Current Anode

Impressed Current Anode Control UNIT LED Display		
LED Color	**Meaning**	**Audible Signal**
Red	Fault, e.g. ■ Short circuit ■ No water in DHW cylinder ■ Cables not connected ■ Faulty anode/electronic unit	Sequence ■ 5 short beeps in 3 second intervals, followed by a 5 minute break - this sequence will repeat 3 times ■ 2 hour break ■ Repeat of the entire sequence
Green	Normal Operation	-

Tank Temperature Sensor

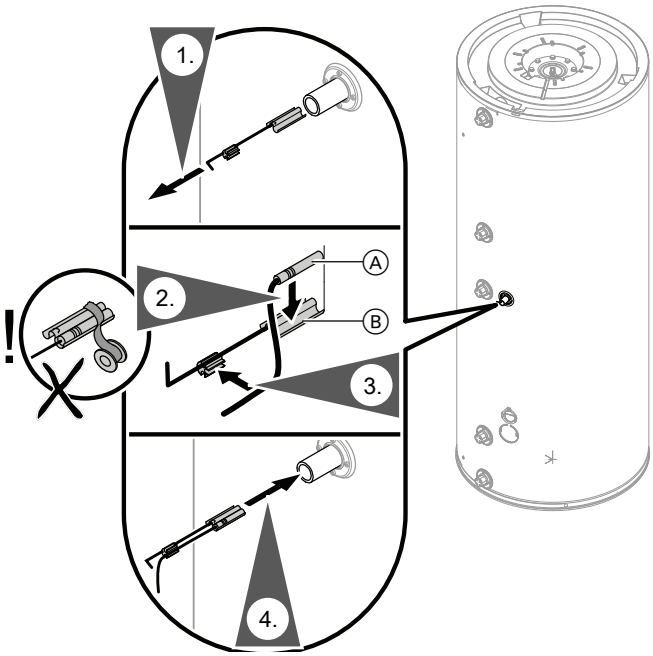

Legend

Ⓐ DHW Tank temperature sensor
Ⓑ Sensor retainer and contact spring

IMPORTANT

Never wrap insulating tape around the sensor.

1. Carefully pull sensor mounting hardware out from tank sensor well.
2. Mount sensor on the outside of the sensor spring-clip (not in the center groove) so that it is flush with the front of the sensor spring-clip.
3. Push sensor cabling into groove of mounting hardware.
4. Push the sensor retainer with sensor into the sensor well as far as it will go.

Fitting the Cosmetic Covers

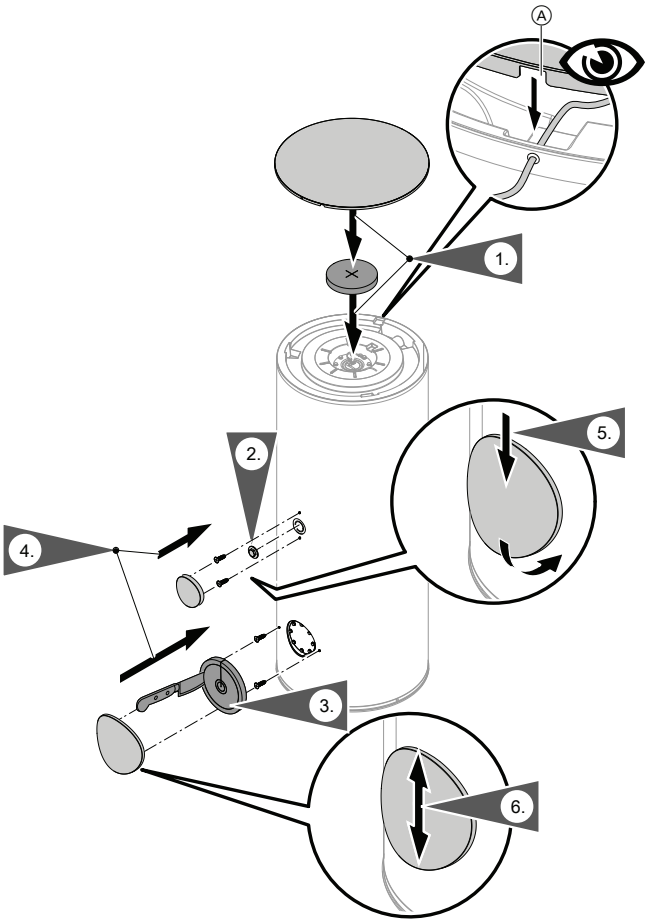

1. Place the insulation mat over the port at the top of the tank followed by the top cover, ensuring that the cable relief cutout Ⓐ aligns with the electric anode cable.
2. Apply pipe thread sealant to the supplied plug and install the plug into the auxiliary port of the tank - 66 and 79 USG (250 and 300 L) models only.
3. Trim the insulation mat for the inspection port and place into position and install the screws for the inspection port cosmetic cover.
4. Install the screws for the auxiliary port cover cosmetic cover - 66 and 79 USG (250 and 300 L) models only.
5. Slide the auxiliary cosmetic cover down over the screw, and push into place.
6. Slide the inspection port cosmetic cover down over the screws.

Heating System Connections

Recommended piping for solar application with an additional tank

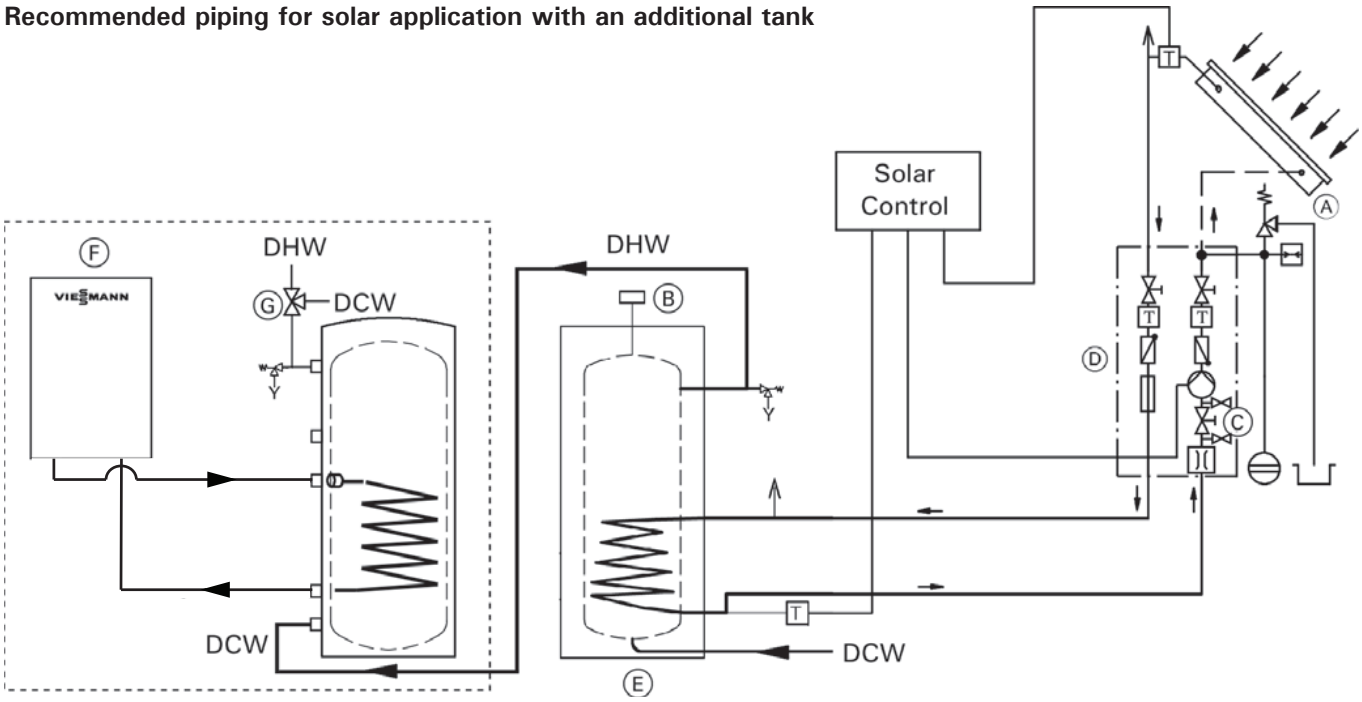

Legend

Ⓐ Solar collector
Ⓑ High limit safety cut-out
Ⓒ Filling valve
Ⓓ Solar-Divicon
Ⓔ DHW Tank
Ⓕ Individual DHW tank heating system
Ⓖ Anti-scald tempering valve

Note:
Tee with sensor well for solar return must be ordered separately.

⚠ WARNING

Due to the potentially high DHW temperatures generated by the solar heating system, the domestic hot water temperature must be limited to a maximum of 140°F (60°C) by installing a anti-scald tempering valve. The tempering valve does not completely eliminate the risk of scalding at the tap. The installation of a mixing tap is recommended.

1. For boiler water supply temperatures over 203°F (95°C): Remove plastic supply and return grommets (grommets are left-threaded).
2. Pipe supply line with an incline and install an air vent valve at the highest point.
3. For boiler water supply temperatures over 230°F (110°C): Install a type-tested high limit safety cut-out, if no other has previously been installed in this system. For this purpose, install a dual thermostat (high limit thermostat and high limit safety cut-out).
4. Close off test nipples which are not used for the installation of a probe or sensor.

Domestic Water Connections

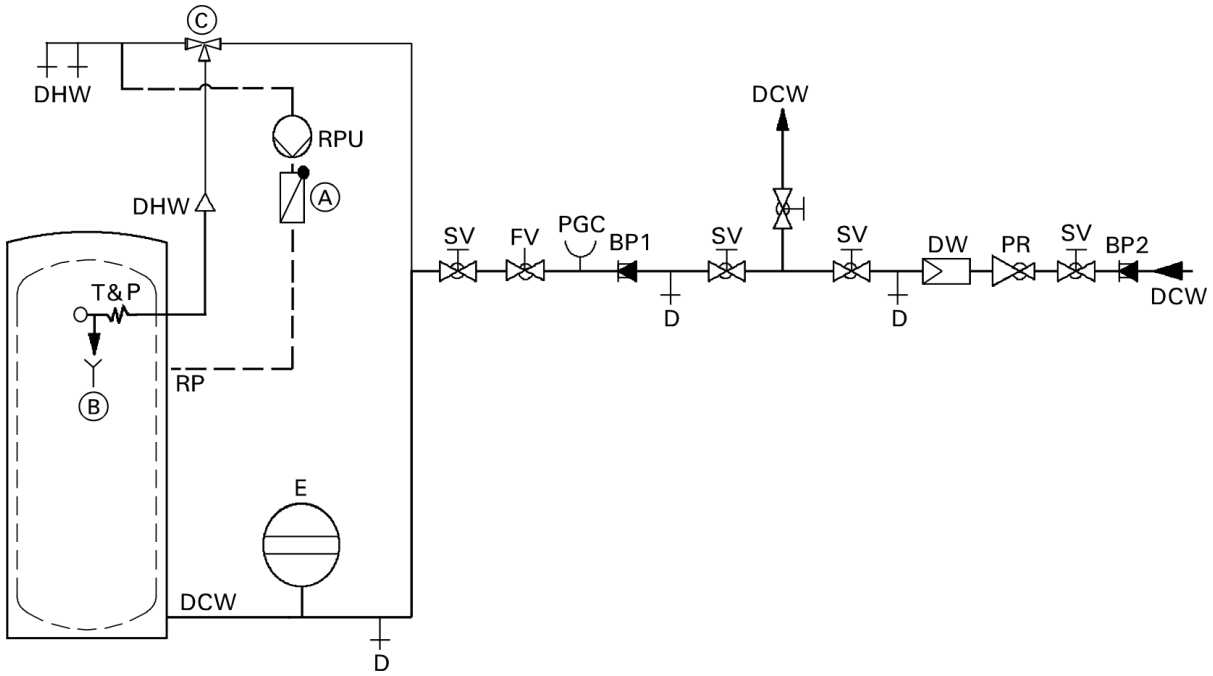

Legend

- Ⓐ Spring-loaded flow check valve
- Ⓑ Discharge pipe
- Ⓒ Anti-scald tempering valve (field supplied)
- SV Shut-off valve
- FV Flow check valve
- PR Pressure reducing valve
- D Drain
- DCW Cold water supply lines
- PGC Pressure gage connection
- E Precharged expansion tank (required where backflow preventer is installed; check local plumbing codes and requirements)
- BP1 Backflow preventer
- BP2 Backflow preventer
- T&P Temperature and pressure relief valve
- DW Water filter
- DHW Domestic hot water supply
- RP Recirculation pipe
- RPU Recirculation pump

Note:

- Connect all pipe work with detachable fittings
- Seal connections that are not required with brass caps.
- Equip the DHW recirculation pipe with recirculation pump, check valve and time switch.

1. Pipe together boiler and tank as illustrated. Connections must be accessible for service (use factory supplied adaptors).
2. Insulate domestic hot water supply piping.

IMPORTANT

This is a simplified conceptual drawing only! Piping and necessary componentry must be field verified. Proper installation and functionality in the field are the responsibility of the heating contractor.

Water Connections

Always ensure the use of type approved devices. Safety devices include the following components:

– Isolation valves
– Drain valve
– Pressure reducing valve where required by local jurisdiction
– Drinking water filter where required by local jurisdiction
– Backflow preventer - Where backflow preventers are required, a domestic water expansion tank installation is required in the cold water inlet piping before the cold water enters the tank. The backflow device must be installed according to the manufacturer's installation instructions. Observe local codes and regulations.
– Tempering valve - A tempering valve must be field installed where storage tank (domestic hot water temperature) exceeds local restricted temperatures or 140°F (60°C). Check code requirements.

IMPORTANT

In situations where a booster pump is used to maintain DHW pressure,its strongly recommended to install an oversized large expansion tank to ensure longer, less frequent pump cycles with less severe pressure gradients. If possible, use flexible piping before and after booster pump to isolate system piping from vibration and shocks.

Temperature and pressure relief valve

A temperature and pressure relief valve (T&P valve) is supplied with the tank. The heating contractor must install the valve on each tank in a method meeting code requirements.

If local codes require a different relief valve, consult distributer for a substitute valve.
The tank is approved for 150 psig. Maximum operating pressure is 150 psig.

The T&P valve supplied with the tank is tested under ANSI Z21.22 Code for Relief Valves and Automatic Gas Shut-off Devices for Hot Water Supply Systems.

T&P Valve set pressure	**150 psig**
CSA discharge capacity	205 MBH
Relief temperature	210°F (99°C)
Inlet thread	¾" male
Outlet thread	¾" female

Proper installation of the T&P valve shall include all of the following:

– The T&P valve shall be installed in the pipe connection point as shown in this manual.
– The discharge line from the T&P valve shall be ∅¾ in. (19 mm) and run to a safe place of discharge approximately 1 ft. (305 mm) above the floor, close to a floor drain.
– The discharge line must be as short as possible and pitch downward from the T&P valve and terminate plain not threaded.

⚠ WARNING

The discharge line for the T&P valve must be oriented to prevent scalding of attendants.

– Do not route discharge line directly to the outdoors.
– Do not install any type of valve or restriction of any kind between the tank and the T&P valve, or between the T&P valve and the discharge line outlet.

⚠ WARNING

The valve test lever must be operated at least once per year by the owner to ensure that waterways are clear. A licensed professional heating contractor shall reinspect the T&P valve at least once every three years. Failure to inspect can result in unsafe temperature or pressure build-up, which can result in death, serious injury or substantial product/property damage.

Pressure Drop

CVWC53S2D3CMW 53 USG (200L)

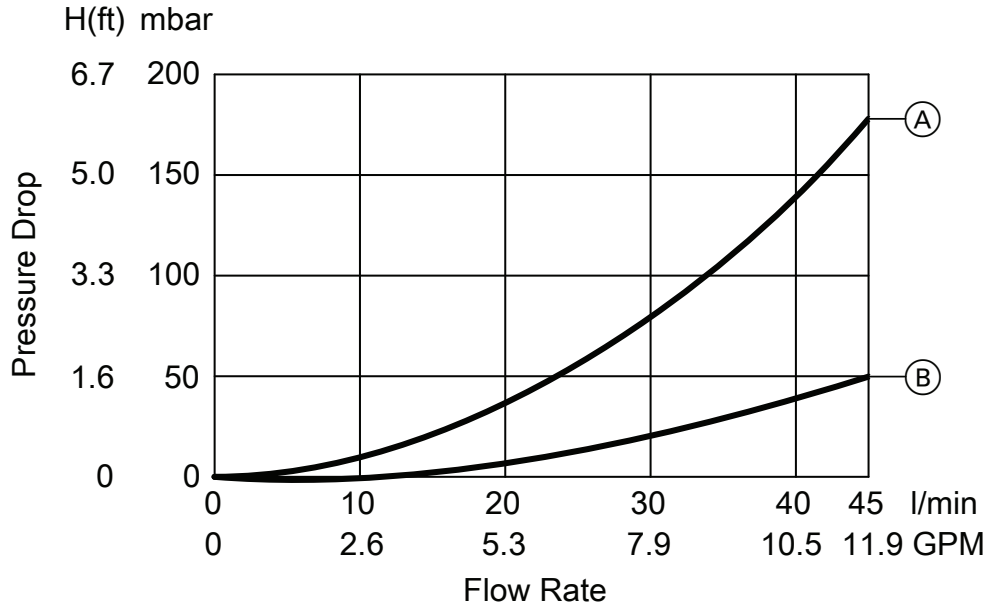

Legend
Ⓐ Heating System Water
Ⓑ DHW

CVWC66S2D3CMW 66 USG (250L)

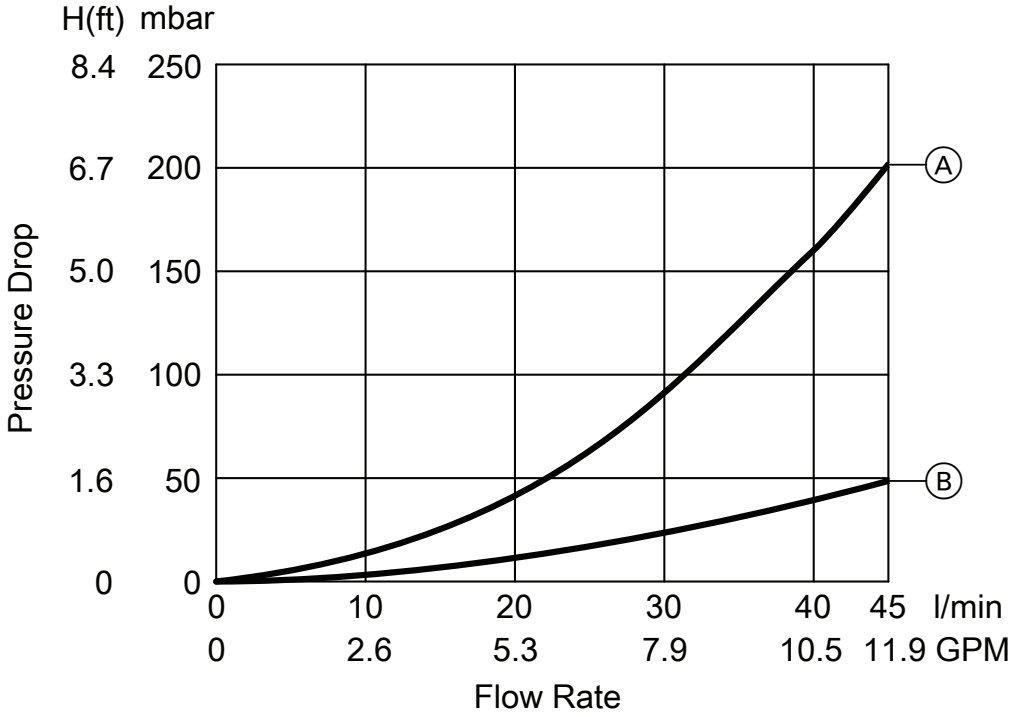

Legend
Ⓐ Heating System Water
Ⓑ DHW

Pressure Drop

CVWC79S2D3CMW 79 USG (300L)

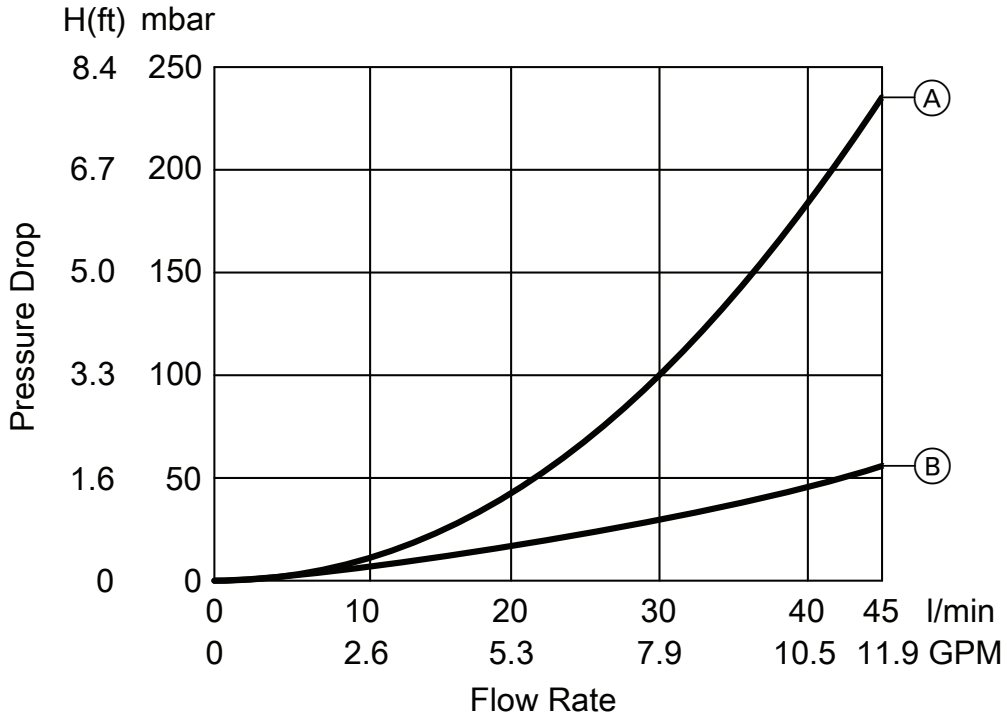

Legend
Ⓐ Heating System Water
Ⓑ DHW

Initial Start-up

1. Fill tank with domestic drinking water.
2. Check heating side and domestic water side adaptors for leaks. Tighten if necessary.
3. Ensure that DHW tank temperature sensor is properly inserted into the mounting clamp.
4. Verify proper operation of temperature and pressure relief valve (T&P valve).
5. Activate power supply.

Domestic Hot Water Production

Ensure the instructions and requirements of the heat generator and system accessories are observed.

Domestic hot water production can occur via heating boiler, a remote heating plant or low temperature heating via bivalent operation.
The maximum heating supply temperature is 248°F (120°C), the maximum operating pressure is 150 psig on the tank.

⚠ WARNING

Domestic hot water temperatures over 125°F (52°C) can cause severe burns instantly or death from scalds. Children, disabled and elderly are at highest risk of being scalded. Feel water before bathing or showering. Temperature limiting valves are available and must be used where domestic hot water storage tank temperature exceed 140°F (60°C).

Domestic hot water production

1. Set the desired domestic hot water temperature (140°F (60°C) for example) on the operating control of the heating system.
2. The supply temperature for domestic hot water production is set on the heating system operating control. It should be approximately 27°F (15°C) above the desired domestic hot water temperature.
3. For your personal safety, we recommend the installation of a tempering valve to restrict the entry of excessively hot domestic hot water into the system. Hire a qualified heating contractor.

IMPORTANT

Domestic hot water may be preheated or heated to temperatures over 113°F (45°C) depending on system energy output and temperature characteristics.

Temperature and Pressure Relief Valve

⚠ WARNING

The possibility of mineral build-up on the T&P valve seat exists. Report dripping or discharges from the T&P valve to the heating contractor immediately.

- Ensure there is never any type of valve or restriction of any kind between the tank and the temperature and pressure relief valve (T&P valve), or between the T&P valve and the discharge line outlet. The discharge line must be oriented to enable unobstructed and visible flow of discharge water toward a floor drain.
- If you observe water being released out of the discharge pipe of the temperature and pressure relief valve, contact your heating contractor immediately.
- The valve test lever must be operated at least once per year by the heating contractor to ensure that waterway are clear. A licensed professional heating contractor shall reinspect the T&P valve at least once every three years. Failure to inspect can result in unsafe temperature or pressure build-up, which can result in substantial product/ property damage, serious personal injury or loss of life.

Shutdown

If domestic hot water production is not desired and the risk of freezing temperatures in the mechanical room exists, please contact your heating contractor.

Shutting Down the Heating System

Ensure main power supply to equipment, the heating system and all external controls has been shut down. Take precautions in all instances to avoid accidental activation.

Check all Connections

1. Check heating side and domestic water side adaptors for leaks. Tighten if necessary.
2. Check sensor well for leaks. Tighten if necessary.

Ensure Proper Operation of all Safety Devices

Verify proper operation of temperature and pressure relief valve (T&P valve).

Clean Outside of the Tank

Clean tank enclosure panel with a commercially available alcohol-based glass cleaning agent and a soft clean cloth.

Place System into Operation Again

Ensure main power supply to equipment, the heating system and all external controls are reactivated.

Cleaning the Inside of the Tank

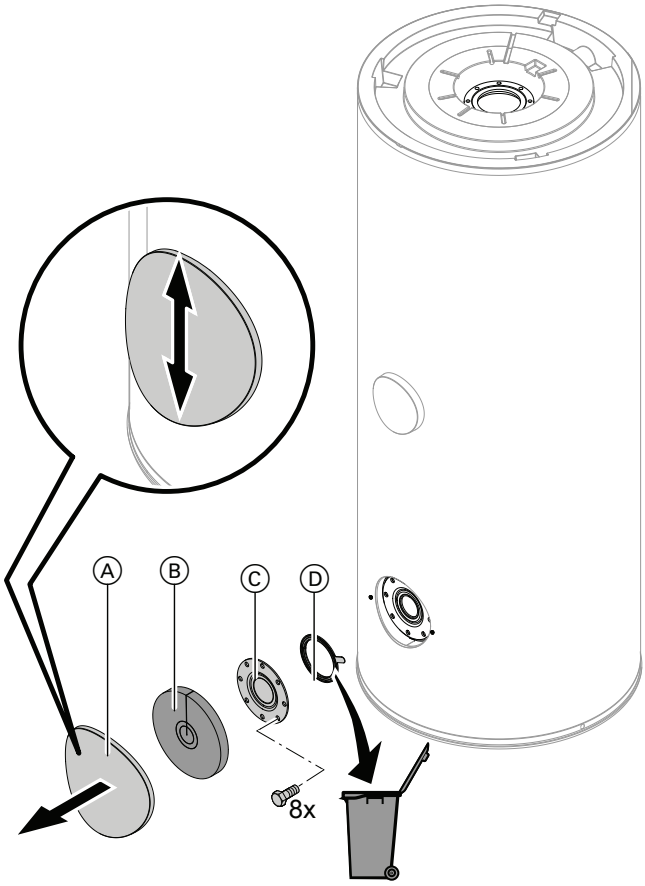

Preparation and Cleaning

1. Drain the domestic water from the DHW tank.

⚠ WARNING

Water being drained may be hot!

2. Remove cosmetic cover Ⓐ, thermal insulation Ⓑ, inspection port flange cover Ⓒ and gasket Ⓓ.
3. Disconnect the DHW tank from the pipe work domestic water system to prevent cleaning agents and contaminants from entering the pipe work.
4. Only use plastic tools to clean the interior. Remove loose deposits with a pressure washer or manually.
   Note:
   Pointed, sharp and hard objects can damage the interior surfaces.
5. Remove stubborn build-ups which are resistant to the pressure washer with a chemical cleaner.
6. Fully drain all cleaning agent.
7. Rinse interior of tank thoroughly after use of chemical cleaners.

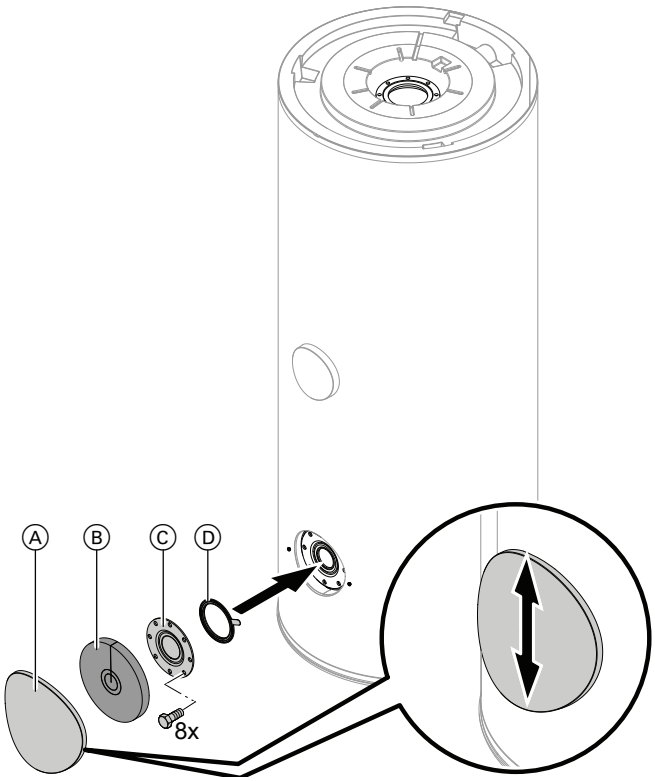

Returning the DHW Tank to Operation

1. Reconnect the DHW cylinder to the pipe work.
2. Install new gasket Ⓓ underneath inspection port flange cover Ⓒ.
3. Install inspection port flange cover Ⓒ.
   Max. torque: 18 lbft (25 Nm)
4. Reconnect the DHW tank to the pipe work.
5. Fill the DHW tank on the DHW side.
6. Insert thermal insulation Ⓑ and reinstall the cosmetic cover Ⓐ.

6217634 - 01

Maintenance Record

	Startup	Maintenance/Service	Maintenance/Service	Maintenance/Service
Date:				
By:				

	Maintenance/Service	Maintenance/Service	Maintenance/Service	Maintenance/Service
Date:				
By:				

	Maintenance/Service	Maintenance/Service	Maintenance/Service	Maintenance/Service
Date:				
By:				

	Maintenance/Service	Maintenance/Service	Maintenance/Service	Maintenance/Service
Date:				
By:				

	Maintenance/Service	Maintenance/Service	Maintenance/Service	Maintenance/Service
Date:				
By:				

	Maintenance/Service	Maintenance/Service	Maintenance/Service	Maintenance/Service
Date:				
By:				

Parts List

Model No.	Serial No.
CVWC53S2D3CMW	N□□□□D□□□□

Ordering Parts:
Please provide Serial Number when ordering replacement parts. Order replacement components from your distributor.

Parts

0001	Leveling Feet
0002	Nameplate
0003	Gasket
0004	Flange (w gasket)
0005	Clamping Bracket
0006	Titanium anode
0007	Flange Insulation
0008	Top Panel
0009	Gasket, Titanium Anode
0010	Anode Control Module
0011	Flanged Cover with Gasket
0012	Cover Hood (White front cover)
0013	Flange Insulation Cover
0014	Screw 4 x 10 (2 pieces)
0015	Inst/Oper/Svc Instr
0016	Sensor Mounting Hardware
0017	Installation Set
0018	Access Pack
0019	Adaptor NPT 1”
0020	Adaptor NPT1” indirect coil
0021	Touch-UP Spray Paint
0022	Touch-UP Paint Stick

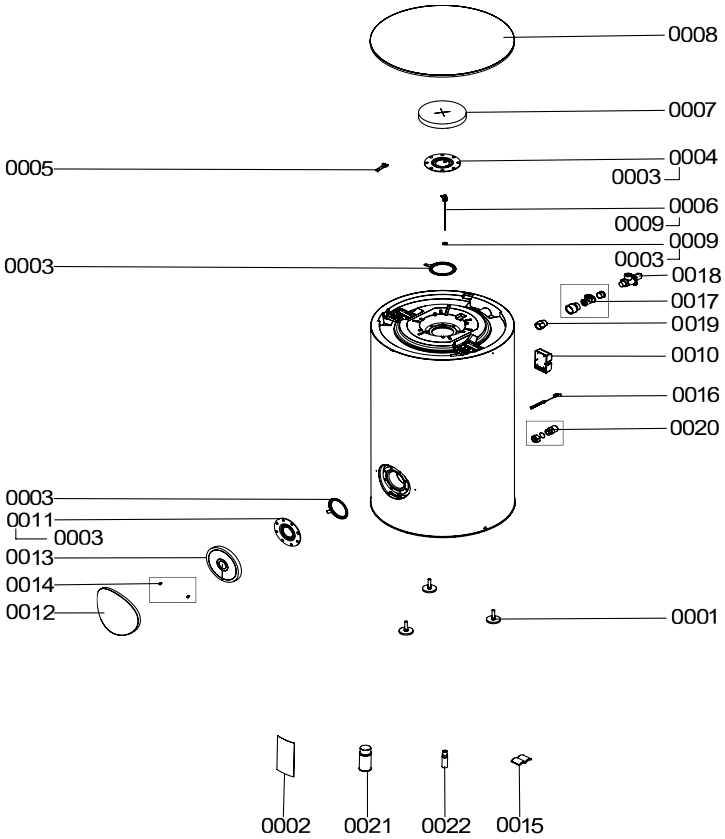

6217634 - 01

Parts List

Model No.	Serial No.
CVWC66S2D3CMW	N□□□□D□□□□
CVWC79S2D3CMW	N□□□□D□□□□

Ordering Parts:
Please provide Serial Number when ordering replacement parts. Order replacement components from your distributor.

Parts

0001 Leveling Feet
0002 Nameplate
0003 Gasket
0004 Flange (w gasket)
0005 Clamping Bracket
0006 Titanium anode
0007 Flange Insulation
0008 Top Panel
0009 Gasket, Titanium Anode
0010 Anode Control Module
0011 Flanged Cover with Gasket
0012 Cover Hood (White front cover)
0013 Flange Insulation Cover
0014 Cover Small
0015 Screw 4 x 10 (2 pieces)
0016 Inst/Oper/Svc Instr
0017 Sensor Mounting Hardware
0018 Installation Set
0019 Access Pack
0020 Plug 1¼"
0021 Adaptor NPT 1"
0022 Adaptor NPT1" indirect coil
0023 Touch-UP Spray Paint
0024 Touch-UP Paint Stick

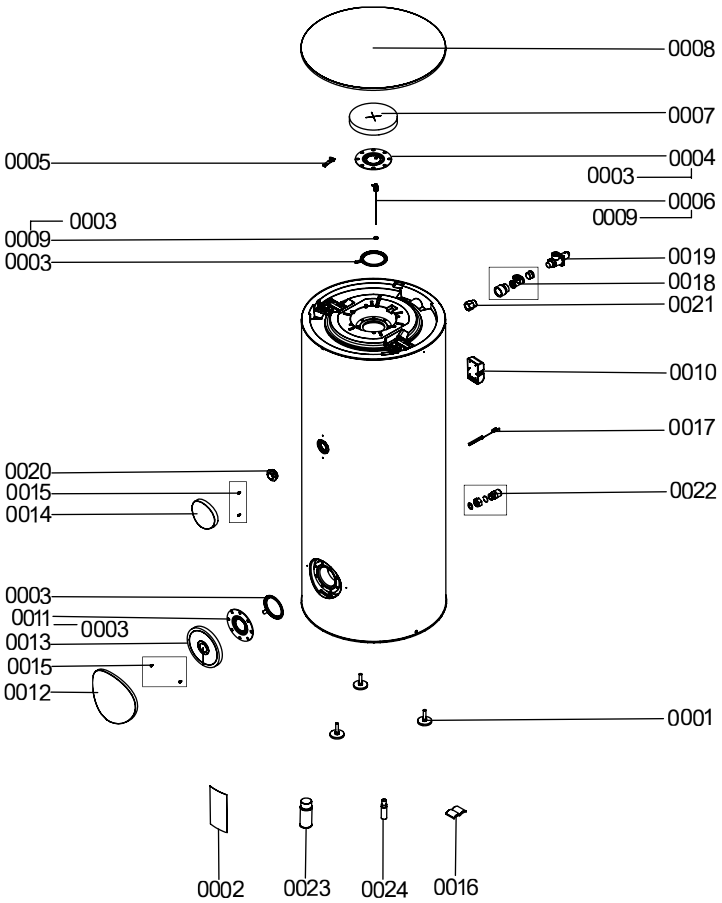

6217634 - 01

Printed on environmentally friendly (recycled and recyclable) paper.

©2025 Carrier Corp. All rights resevered

Edition Date: 04/25

Catalog No: 6217634 - 01

A Proud Member of the Carrier Family

Replaces: NEW

Manufacturer reserves the right to change, at any time, specifications and designs without notice and without obligations.