Installation Guide for the CAR-DMS-BAC-001 gateway

Version 1.0.0

Owner's record

Find the serial number on the silver label on the right side of the gateway. For sales or technical assistance, we recommend writing it in the space below:

SN:

Safety Information

Follow these instructions carefully. Improper work may seriously harm your health and damage the gateway and/or any other equipment connected to it.

Only technical personnel, following these instructions and the country legislation for installing electric equipment, can install and manipulate this gateway.

Install this gateway indoors, in a restricted access location, avoiding exposure to direct solar radiation, water, high relative humidity, or dust.

All wires for communication and power supply (if needed) must only be connected to networks without routing to the outside plant. All communication ports are considered for indoor use and must only be connected to SELV circuits.

Mount the gateway, preferably, on a DIN rail inside a grounded metal cabinet following the instructions below.

In the case of wall mounting, firmly fix the gateway on a non-vibrating surface following the instructions below.

Disconnect power wires before manipulating and connecting them to the gateway.

Use SELV-rated NEC class 2 or limited power source (LPS) power supply.

Supply the correct voltage to power the gateway. See the Technical Specifications table at the end of this document.

Respect the expected polarity of power (if needed) and communication cables when connecting them to the gateway.

This gateway is designed for installation inside an enclosure. When working inside an enclosure (ex. to make adjustments, set switches, etc.) observe the common antistatic precautions before manipulating the gateway.

Take precautions when installing it outside an enclosure to avoid electrostatic discharges.

These safety instructions in other languages can be found here.

Mounting

Mount the gateway over a wall or over a DIN rail.

Do not mount the gateway in air-handling units or conducts.

DIN rail mounting inside a grounded metallic cabinet is recommended.

Wall mounting

1. Press the rear panel clips outwards until you hear a *click*.
2. Use the clip holes to screw the gateway to the wall.
3. Make sure the gateway is firmly fixed.

DIN rail mounting

Keep the clips in its original position.

1. Fit the gateway's top-side clip in the upper edge of the DIN rail.
2. Press the low side of the gateway gently to lock it in the DIN rail.
3. Make sure the gateway is firmly fixed.

For some DIN rails, to complete step 2, you may need a small screwdriver or similar to pull the bottom clip down.

Product Dimensions

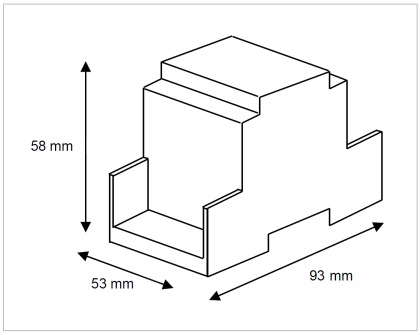

Wiring

Keep communication cables as far away as possible from power and ground cables. Never bundle them together.

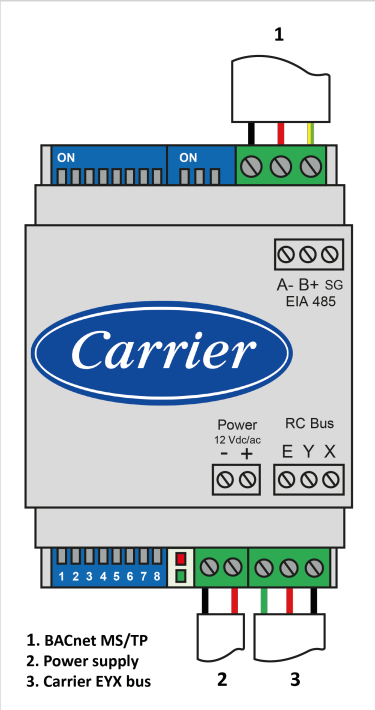

1. Disconnect the AC system from power.
2. Mount the gateway in the desired place.
3. Connect the Carrier EYX bus to the gateway's RC Bus connector.

   The maximum distance of the Carrier bus is 1200 meters (0.75 miles).

4. Connect the BACnet MS/TP bus to the gateway's EIA 485 port.

   Observe polarity: A-, B+, and SG for ground connection.

5. Connect the power supply to the gateway's Power connector.

   Observe polarity.

   Supply the correct voltage and power: 12 VDC/AC, 0.2 A

   Consult all requirements in the Technical Specifications table at the end of this document.

© HMS Industrial Networks SLU | www.hms-networks.com

DIP Switches

The gateway includes three DIP switches: SW1 (8 positions) at the bottom and SW2 (8 positions) and SW3 (3 positions) at the top.

SW1 (positions 1 .. 5) - Gateway configuration:

Binary value	Position								Description
b0 .. b7	1	2	3	4	5	6	7	8	
00XXXXXX	OFF	OFF	X	X	X	X	X	X	Carrier V4/V6 Autodetection (default)
01XXXXXX	OFF	ON	X	X	X	X	X	X	Reserved
10XXXXXX	ON	OFF	X	X	X	X	X	X	Force Carrier V4
11XXXXXX	ON	ON	X	X	X	X	X	X	Force Carrier V6
XX0XXXXX	X	X	OFF	X	X	X	X	X	-
XX1XXXXX	X	X	ON	X	X	X	X	X	-
XXX0XXXX	X	X	X	OFF	X	X	X	X	-
XXX1XXXX	X	X	X	ON	X	X	X	X	-
XXXX0XXX	X	X	X	X	OFF	X	X	X	Low power mode
XXXX1XXX	X	X	X	X	ON	X	X	X	High performance mode (default)

SW1 (positions 6 .. 8) - Baud rate:

Binary value	Position								Description
b0 .. b7	1	2	3	4	5	6	7	8	
XXXXXX000	X	X	X	X	X	OFF	OFF	OFF	Autobaud rate (default)
XXXXXX100	X	X	X	X	X	ON	OFF	OFF	9600 bps
XXXXXX010	X	X	X	X	X	OFF	ON	OFF	19200 bps
XXXXXX110	X	X	X	X	X	ON	ON	OFF	38400 bps
XXXXXX001	X	X	X	X	X	OFF	OFF	ON	57600 bps
XXXXXX101	X	X	X	X	X	ON	OFF	ON	76800 bps
XXXXXX011	X	X	X	X	X	OFF	ON	ON	115200 bps
XXXXXX111	X	X	X	X	X	ON	ON	ON	Autobaud rate

SW2 - MAC address (positions 1 .. 7) and temperature unit Celsius/Fahrenheit (position 8):

Binary value	Position								MAC address *	Description
b0 .. b7	1	2	3	4	5	6	7	8		
0000000X	OFF	OFF	OFF	OFF	OFF	OFF	OFF	X	0	-
1000000X	ON	OFF	OFF	OFF	OFF	OFF	OFF	X	1	-
0100000X	OFF	ON	OFF	OFF	OFF	OFF	OFF	X	2	-
1100000X	ON	ON	OFF	OFF	OFF	OFF	OFF	X	3	-
...	...								...	-
1011111X	ON	OFF	ON	ON	ON	ON	ON	X	125	-
0111111X	OFF	ON	ON	ON	ON	ON	ON	X	126	-
1111111X	ON	ON	ON	ON	ON	ON	ON	X	127	-
XXXXXXX0	X	X	X	X	X	X	X	OFF	-	Temperature in Celsius (default)
XXXXXXX1	X	X	X	X	X	X	X	ON	-	Temperature in Fahrenheit

* Regarding the MAC address:

The device instance for the gateway can be assigned automatically or manually:

- **Automatic addressing (default)**: Under this mode, the gateway's device instance will be composed of the selected MAC address number from SW2 and a base address of 246000.
- **Manual addressing**: You can write the device instance from BACnet using the Object Identifier property of the Device object. When doing so, the SW2 configuration (positions 1 to 7) is not considered.

SW3 - EIA 485 bus termination resistor (position 1) and polarization (positions 2 and 3):

Binary value	Position			Description
b0 .. b2	1	2	3	
0 X X	OFF	X	X	120 Ω termination resistor inactive.[4]
1 X X	ON	X	X	120 Ω termination resistor active.[4]
X 0 0	X	OFF	OFF	No bus polarization (default value)
X 1 1	X	ON	ON	Bus polarization active

Observe the **ON** indicator on each DIP switch as a reference.

The DIP switches configuration will only take effect after rebooting the gateway.

Technical Specifications

Housing	Plastic, type PC (UL 94 V-0) Net dimensions (HxWxD): 93 x 53 x 58 mm / 3.7 x 2.1 x 2.3” Color: Light grey. RAL 7035
Weight	85 g (3 oz)
Terminal wiring	Wire cross-section/gauge per terminal: One core: 0.2 .. 2.5 mm^2 (24 .. 11 AWG) Two cores: 0.2 .. 1.5mm^2 (24 .. 15 AWG) Three cores: Not permitted Use solid or stranded wires (twisted or with ferrule).
Power supply	SELV-rated NEC class 2 or limited power source (LPS) power supply 12 VDC/AC; 0.2 A Max. distance to the power supply: 3 m (9.8 ft)
Mounting	Wall or DIN rail
EIA-485 port for BACnet MS/TP	1 x pluggable terminal block (3 poles: A-, B+, and SG)
AC unit port	1 x RC5 or serial EIA-485 pluggable terminal block (3 poles: EYX)
LED indicators	2 x Communication status

DIP switches	SW1: Gateway and baud rate configuration
	SW2: MAC address and temperature unit
	SW3: Bus polarization and termination:
	• Position 1:
	  • On: 120 Ω termination active
	  • Off: 120 Ω termination inactive (default)
	• Positions 2 and 3:
	  • On: Polarization active
	  • Off: Polarization inactive (default)

Operational and storage temperature	Operational: 0 .. 60°C (32 .. 140°F) Storage: -20 .. 85°C (-4 .. 185°F)
Operational and storage humidity	Operational: 5% to 95% RH non-condensing Storage: <95% RH non-condensing
Isolation Voltage	1500 VDC between EIA-485 and RC5 buses
Isolation resistance	1000 MΩ

Disposal and Recycling

This product contains electronic components and must be properly disposed of according to local laws and regulations. For further information, refer to: https://www.hms-networks.com/corporate-social-responsibility

For further information on the installation, connection, and configuration of this gateway, refer to the User manual.