**D5CERAA**
Outdoor Unit Cooling Only Ductless System
Sizes 9K - 24K

# Installation Instructions

**Fig. 1 —All Sizes**

**NOTES: Read the entire instruction manual before starting the installation.**

**Images are for illustration purposes only. Actual models may differ slightly.**

## TABLE OF CONTENTS


| | Page |
|---|---|
| SAFETY CONSIDERATIONS | 2 |
| CAPACITY | 9 |
| ACCESSORIES | 9 |
| DIMENSIONS | 10 |
| CLEARANCES | 13 |
| INSTALLATION | 14 |
| INSTALL THE OUTDOOR UNIT | 15 |
| REFRIGERANT PIPING | 17 |
| AIR EVACUATION | 20 |
| WIRING | 22 |
| TEST RUN | 24 |
| CARE AND MAINTENANCE | 24 |
| TROUBLESHOOTING | 24 |
| PACKING AND UNPACKING THE UNIT | 24 |
| ERROR CODES | 25 |
| DUCTLESS START-UP CHECKLIST | 26 |

# SAFETY CONSIDERATIONS

Installing, starting up, and servicing air-conditioning equipment can be hazardous due to system pressures, electrical components, and equipment location (roofs, elevated structures, etc.).

Only trained, qualified installers and service mechanics should install, start-up, and service this equipment.

Untrained personnel can perform basic maintenance functions such as coil cleaning. All other operations should be performed by trained service personnel.

When working on the equipment, observe precautions in the literature and on tags, stickers, and labels attached to the equipment.

Follow all safety codes. Wear safety glasses and work gloves. Keep a quenching cloth and fire extinguisher nearby when brazing. Use care in handling, rigging, and setting bulky equipment.

Read these instructions thoroughly and follow all warnings or cautions included in literature and attached to the unit. Consult local building codes and National Electrical Code (NEC) for special requirements. Recognize safety information.

### This is the safety-alert symbol ⚠.

When you see this symbol on the unit and in instructions or manuals, be alert to the potential for personal injury. Understand these signal words: **DANGER**, **WARNING**, and **CAUTION**. These words are used with the safety-alert symbol.

**DANGER** identifies the most serious hazards which will result in severe personal injury or death.

**WARNING** signifies hazards which could result in personal injury or death.

**CAUTION** is used to identify unsafe practices which may result in minor personal injury or product and property damage.

**NOTE** is used to highlight suggestions which will result in enhanced installation, reliability, or operation.

## ⚠ WARNING

**ELECTRICAL SHOCK HAZARD**

Failure to follow this warning could result in personal injury or death.

Before installing, modifying, or servicing system, the main electrical disconnect switch must be in the OFF position. There may be more than 1 disconnect switch. Lock out and tag switch with a suitable warning label.

## ⚠ WARNING

**EXPLOSION HAZARD**

Failure to follow this warning could result in personal injury or death. Before installing, modifying, or servicing system, the main electrical disconnect switch must be in the OFF position. There may be more than 1 disconnect switch. Lock out and tag switch with a suitable warning label.

## ⚠ CAUTION

**EQUIPMENT DAMAGE HAZARD**

Failure to follow this caution may result in equipment damage or improper operation.

Do not bury more than 36 in. (914 mm) of refrigerant pipe in the ground. If any section of pipe is buried, there must be a 6 in. (152 mm) vertical rise to the valve connections on the outdoor units. If more than the recommended length is buried, refrigerant may migrate to the cooler buried section during extended periods of system shutdown. This causes refrigerant slugging and could possibly damage the compressor at start-up.

## ⚠ WARNING

This appliance is not intended for use by persons (including children) with reduced physical, sensory or mental capabilities, or lack of experience and knowledge, unless they have been given supervision or instruction concerning use of the appliance by a person responsible for their safety. Children should be supervised to ensure that they do not play with the appliance.

## ⚠ WARNING

Only use the specified wire. If the wire is damaged, it must be replaced by the manufacturer, its service agent or similarly qualified persons in order to avoid a hazard. The product must be properly grounded at the time of installation, or electric shock may occur.

For all electrical work, follow all local and national wiring standards, regulations, and the Installation Manual. Connect the cables tightly, and clamp them securely to prevent external forces from damaging the terminal. Improper electrical connections can overheat and cause fire, and may also cause shock. All electrical connections must be made according to the Electrical Connection Diagram located on the panels of the indoor and outdoor units.

All wiring must be properly arranged to ensure that the control board cover can close properly. If the control board cover is not closed properly, it can lead to corrosion and cause the connection points on the terminal to heat up, catch fire, or cause electrical shock.

Disconnection must be incorporated in the fixed wiring in accordance with NEC, CSA, and Local Codes. Do not share the electrical outlet with other appliances. Improper or insufficient power supply can cause fire or electric shock.

If connecting power to fixed wiring, an all-pole disconnection device which has at least 3mm clearances in all poles, and have a leakage current that may exceed 10mA, the residual current device (RCD) having a rated residual operating current not exceeding 30mA, and disconnection must be incorporated in the fixed wiring in accordance with NEC, CSA, and Local Codes.

**Manufacturer reserves the right to change, at any time, specifications and designs without notice and without obligations.**

## ⚠ WARNING

Turn of the unit and disconnect the power before performing any installation or repairing. Failure to do so can cause electric shock.

Installation must be performed by an authorized dealer or specialist. Defective installation can cause water leakage, electrical shock, or fire.

Installation must be performed according to the installation instructions. Improper installation can cause water leakage, electrical shock, or fire.

Contact an authorized service technician for repair or maintenance of this unit. This appliance shall be installed in accordance with national wiring regulations. Only use the included accessories, parts, and specified parts for installation. Using non-standard parts can cause water leakage, electrical shock, fire, and can cause the unit to fail.

Install the unit in a firm location that can support the unit's weight. If the chosen location cannot support the unit's weight, or the installation is not done properly, the unit may drop and cause serious injury and damage.

Install drainage piping according to the instructions in this manual. Improper drainage may cause water damage to your home and property.

For units that have an auxiliary electric heater, do not install the unit within 3 feet (1 meter) of any combustible materials.

If combustible gas accumulates around the unit, it may cause fire.

Do not turn on the power until all work has been completed.

When moving or relocating the unit, consult experienced service technicians for disconnection and re-installation of the unit.

How to install the appliance to its support, please read the information for details in "indoor unit installation" and "outdoor unit installation" sections.

**NOTE: The air conditioner's circuit board (PCB) is designed with a fuse to provide overcurrent protection. The specifications of the fuse are printed on the circuit board, for example: T3.15AL/250VAC, T5AL/250VAC, T3.15A/ 250VAC, T5A/ 250VAC, T20A/250VAC, T30A/250VAC,etc.**

**NOTE: Only the blast-proof ceramic fuse can be used.**

## ⚠ WARNING

**FOR FLAMMABLE REFRIGERANTS**

Do not use means to accelerate the defrosting process or to clean, other than those recommended by the manufacturer.

The appliance shall be stored in a room without continuously operating ignition sources (for example: open flames, an operating gas appliance or an operating electric heater).

Do not pierce or burn. Be aware that refrigerants may not contain an odor.

## ⚠ WARNING

**PERSONAL INJURY AND PROPERTY DAMAGE HAZARD**

For continued performance, reliability, and safety, the only approved accessories and replacement parts are those specified by the equipment manufacturer. The use of non-manufacturer approved parts and accessories could invalidate the equipment limited warranty and result in fire risk, equipment malfunction, and failure. Review the manufacturer's instructions and replacement parts catalogs available from your equipment supplier.

**WARNING** - RISK OF FIRE DUE TO FLAMMABLE REFRIGERANT USED. FOLLOW HANDLING INSTRUCTIONS CAREFULLY IN COMPLIANCE WITH NATIONAL REGULATIONS.

R-454B Refrigerant Safety Group **A2L** R-454B

**NOTE: Risk of Fire. Flammable refrigerant used. To be repaired only by trained service personnel. Do not puncture refrigerant tubing.**

1. **Installation (where refrigerant pipes are allowed)**

   Any person who is involved with working on or breaking into a refrigerant circuit should hold a current valid certificate from an industry-accredited assessment authority, which authorizes their competence to handle refrigerants safely in accordance with an industry recognized assessment specification.

   Maintenance and repair requiring the assistance of other skilled personnel shall be carried out under the supervision of the person competent in the use of flammable refrigerants.

   That the installation of pipe-work shall be kept to a minimum.

   That pipe-work shall be protected from physical damage.

   Where refrigerant pipes shall be compliance with national gas regulations.

   That mechanical connections shall be accessible for maintenance purposes.

   Be more careful that foreign matter (oil, water, etc) does not enter the piping. Also, when storing the piping, securely seal the opening by pinching, taping, etc.

   All working procedure that effects safety means shall only be carried by competent persons.

   Appliance shall be stored in a well ventilated area where the room size corresponds to the room area as specific for operation.

   Joints shall be tested with detection equipment with a capability of 1/8 oz (5grams)/year of refrigerant or better, with the equipment in standstill and under operation or under a pressure of at least these standstill or operation conditions after installation.

   In cases that require mechanical ventilation, ventilation openings shall be kept clear of obstruction.

2. **When a FLAMMABLE REFRIGERANT is used**

   The requirements for installation space of appliance and/or ventilation requirements are determined according to:

   – the mass charge amount (M) used in the appliance,
   –-the installation location,
   –-the type of ventilation of the location or of the appliance.
   –-piping material, pipe routing, and installation shall include protection from physical damage in operation and service, and be in compliance with national and local codes and standards, such as ASHRAE 15 or CSA B52. All field joints shall be accessible for inspection prior to being covered or enclosed.
   –-that protection devices, piping, and fittings shall be protected as far as possible against adverse environmental effects, for example, the danger of water collecting and freezing in relief pipes or the accumulation of dirt and debris;
   –-that piping in refrigeration systems shall be so designed and installed to minimize the likelihood of hydraulic shock damaging the system;
   –-that steel pipes and components shall be protected against corrosion with a rustproof coating before applying any insulation;
   –-that precautions shall be taken to avoid excessive vibration or pulsation;
   –-the minimum floor area of the room shall be mentioned in the form of a table or a single figure without reference to a formula;
   –-after completion of field piping for split systems, the field pipework shall be pressure tested with an inert gas and then vacuum tested prior to refrigerant charging, according to the following requirements:

   a. The required nitrogen pressure is 500 psi
   b. The test pressure after removal of pressure source shall be maintained for at least 1 hour with no decrease of pressure indicated by the test gauge, with test gauge resolution not exceeding 5% of the test pressure.
   c. During the evacuation test, after achieving a vacuum level specified in the manual or less, the refrigeration system shall be isolated from the vacuum pump and the pressure shall not rise above 1500 microns within 10 min. The vacuum pressure level shall be specified in the manual, and shall be the lessor of 500 microns or the value required for compliance with national and local codes and standards, which may vary between residential, commercial, and industrial buildings.

   –Field-made refrigerant joints indoors shall be tightness tested according to the following requirements: The test method shall have a sensitivity of 1/8 oz (5grams) per year of refrigerant or better under a pressure of at least 125% of the maximum allowable pressure. No leak shall be detected.

3. **Qualification of Workers**

   Any maintenance, service and repair operations must be performed by skilled and authorized personnel. Every working procedure that effects safety means shall only be carried out by competent persons that joined the training and achieved competence should be documented by a certificate. The training of these procedures is carried out by national training organizations or manufacturers that are accredited to teach the relevant national competency standards that may be set in legislation. Examples for such working procedures are:

   - breaking into the refrigerating circuit;
   - opening of sealed components;
   - opening of ventilated enclosures.

4. **Checks to the area**

   Prior to beginning work on systems containing flammable refrigerants, safety checks are necessary to ensure that the risk of ignition is minimized. For repair to the refrigerating system, the following precautions shall be complied with prior to conducting work on the system.

5. **Work procedure**

   Works shall be undertaken under a controlled procedure so as to minimize the risk of a flammable gas or vapor being present while the work is being performed.

6. **General work area**

   All maintenance staff and others working in the local area shall be instructed on the nature of work being carried out. work in confined spaces shall be avoided.

7. **Checking for presence of refrigerant**

   The area shall be checked with an appropriate refrigerant detector prior to and during work, to ensure the technician is aware of potentially flammable atmospheres.

8. **Presence of fire extinguisher**

   If any hot work is to be conducted on the refrigeration equipment or any associated parts, appropriate fire extinguishing equipment shall be available to hand. Have a dry power or CO˙ fire extinguisher adjacent to the charging area.

**9. No ignition sources**

No person carrying out work in relation to a REFRIGERATING SYSTEM which involves exposing any pipe work shall use any sources of ignition in such a manner that it may lead to the risk of fire or explosion. All possible ignition sources, including cigarette smoking, should be kept sufficiently far away from the site of installation, repairing, removing and disposal, during which refrigerant can possibly be released to the surrounding space. Prior to work taking place, the area around the equipment is to be surveyed to make sure that there are no flammable hazards or ignition risks. “No Smoking” signs shall be displayed.

**10. Ventilated area**

Ensure that the area is in the open or that it is adequately ventilated before breaking into the system or conducting any hot work. A degree of ventilation shall continue during the period that the work is carried out. The ventilation should safely disperse any released refrigerant and preferably expel it externally into the atmosphere.

**11. Checks to the refrigeration equipment**

Where electrical components are being changed, they shall be fit for the purpose and to the correct specification. At all times the manufacturer’s maintenance and service guidelines shall be followed. If in doubt consult the manufacturer’s technical department for assistance. The following checks shall be applied to installations using FLAMMABLE REFRIGERANTS:

- the actual refrigerant charge is in accordance with the room size within which the refrigerant containing parts are installed;
- the ventilation machinery and outlets are operating adequately and are not obstructed;
- if an indirect refrigerating circuit is being used, the secondary circuits shall be checked for the presence of refrigerant;
- marking to the equipment continues to be visible and legible, marking and signs that are illegible shall be corrected;
- refrigeration pipe or components are installed in a position where they are unlikely to be exposed to any substance which may corrode refrigerant containing components, unless the components are constructed of materials which are inherently resistant to being corroded or are suitably protected against being so corroded.

**12. Checks to electrical devices**

Repair and maintenance to electrical components shall include initial safety checks and component inspection procedures. If a fault exists that could compromise safety, then no electrical supply shall be connected to the circuit until it is satisfactorily dealt with. If the fault cannot be corrected immediately but it is necessary to continue operation, and adequate temporary solution shall be used. This shall be reported to the owner of the equipment so all parties are advised. Initial safety checks shall include:

- that capacitors are discharged: this shall be done in a safe manner to avoid possibility of sparking
- that there no live electrical components and wiring are exposed while charging, recovering or purging the system;
- that there is continuity of earth bonding.

**13. Cabling**

Check that cabling is not subjected to wear, corrosion, excessive pressure, vibration, sharp edges or any other adverse environmental effects. The check shall also take into account the effects of aging or continual vibration from sources such as compressors or fans.

**14. Removal and Evacuation**

When breaking into the refrigerant circuit to make repairs or for any other purpose, conventional procedures shall be used. However, for flammable refrigerants it is important that best practice be followed, since flammability is a consideration. The following procedure shall be adhered to:

- safely remove refrigerant following local and national regulations; evacuate
- purge the circuit with nitrogen
- evacuate (requirement)
- continuously flush or purge with nitrogen when using flame to open circuit
- open the circuit

The refrigerant charge shall be recovered into the correct recovery cylinders. Charging must be performed by liquid charging method. For appliances containing flammable refrigerants, the system shall be purged with oxygen-free nitrogen to render the appliance safe for flammable refrigerants. This process might need to be repeated several times. Compressed air or oxygen shall not be used for purging refrigerant systems.

For appliances containing flammable refrigerants, refrigerants purging shall be achieved by breaking the vacuum in the system with oxygen-free nitrogen and continuing to fill until the working pressure is achieved, then venting to atmosphere, and finally pulling down to a vacuum (requirement). This process shall be repeated until no refrigerant is within the system (requirement). When the final oxygen-free nitrogen charge is used, the system shall be vented down to atmospheric pressure to enable work to take place. The outlet for the vacuum pump shall not be close to any potential ignition sources, and ventilation shall be available.

**Manufacturer reserves the right to change, at any time, specifications and designs without notice and without obligations.**

**15. Charging procedures**

In addition to conventional charging procedures, the following requirements shall be followed:

- Work shall be undertaken with appropriate tools only (In case of uncertainty, consult the manufacturer of the tools for use with flammable refrigerants). Ensure that contamination of different refrigerants does not occur when using charging equipment. Hoses or lines shall be as short as possible to minimize the amount of refrigerant contained in them.
- Cylinders shall be kept upright.
- Ensure that the refrigeration system is earthed prior to charging the system with refrigerant.
- Label the system when charging is complete (if not already).
- Extreme care shall be taken not to overfill the refrigeration system.
- Prior to recharging the system it shall be pressure tested with oxygen free nitrogen (OFN). The system shall be leak tested on completion of charging but prior to commissioning. A follow up leak test shall be carried out prior to leaving the site.

**16. Decommissioning**

Before carrying out this procedure, it is essential that the technician is completely familiar with the equipment and all its detail. It is recommended good practice that all refrigerants are recovered safely. Prior to the task being carried out, an oil and refrigerant sample shall be taken in case analysis is required prior to re-use of recovered refrigerant. It is essential that electrical power is available before the task is commenced.

a. Become familiar with the equipment and its operation.
b. Isolate system electrically
c. Before attempting the procedure ensure that:
   - mechanical handling equipment is available, if required, for handling refrigerant cylinders;
   - all personal protective equipment is available and being used correctly;
   - the recovery process is supervised at all times by a competent person;
   - recovery equipment and cylinders conform to the appropriate standards.
d. Pump down refrigerant system, if possible.
e. If a vacuum is not possible, make a manifold so that refrigerant can be removed from various parts of the system.
f. Make sure that cylinder is situated on the scales before recovery takes place.
g. Start the recovery machine and operate in accordance with instructions.
h. Do not overfill cylinders (no more than 80 % volume liquid charge)
i. Do not exceed the maximum working pressure of the cylinder, even temporarily.
j. When the cylinders have been filled correctly and the process completed, make sure that the cylinders and the equipment are removed from site promptly and all isolation valves on the equipment are closed o‹ .
k. Recovered refrigerant shall not be charged into another refrigeration system unless it has been cleaned and checked.

**17. Labeling**

Equipment shall be labeled stating that it has been de-commissioned and emptied of refrigerant. The label shall be dated and signed. For appliances containing FLAMMABLE REFRIGERANTS, ensure that there are labels on the equipment stating the equipment contains FLAMMABLE REFRIGERANT.

**18. Recovery**

When removing refrigerant from a system, either for servicing or decommissioning, it is recommended good practice that all refrigerants are removed safely.

When transferring refrigerant into cylinders, ensure that only appropriate refrigerant recovery cylinders are employed. Ensure that the correct number of cylinders for holding the total system charge is available. All cylinders to be used are designated for the recovered refrigerant and labelled for that refrigerant (i. e. special cylinders for the recovery of refrigerant). Cylinders shall be complete with pressure-relief valve and associated shut-o‹ valves in good working order. Empty recovery cylinders are evacuated and, if possible,cooled before recovery occurs.

The recovery equipment shall be in good working order with a set of instructions concerning the equipment that is at hand and shall be suitable for the recovery of the flammable refrigerant. If in doubt? the manufacturer should be consulted. In addition, a set of calibrated weighing scales shall be available and in good working order. Hoses shall be complete with leak-free disconnect couplings and in good condition.

The recovered refrigerant shall be processed according to local legislation in the correct recovery cylinder, and the relevant waste transfer note arranged. Do not mix refrigerants in recovery units and especially not in cylinders.

If compressors or compressor oils are to be removed, ensure that they have been evacuated to an acceptable level to make certain that flammable refrigerant does not remain within the lubricant. The compressor body shall not be heated by an open flame or other ignition sources to accelerate this process. When oil is drained from a system, it shall be carried out safely.

**19. Unventilated areas**

For appliances containing more than for any refrigerating circuit, the manual shall include a statement advising that an unventilated area where the appliance using FLAMMABLE REFRIGERANTS is installed shall be so constructed that should any refrigerant leak, it will not stagnate so as to create a fire or explosion hazard. This shall include:

- a warning that if appliances with A2L REFRIGERANTS connected via an air duct system to one or more rooms are installed in a room with an area less than >Amin as determined in Clause GG.2, that room shall be without continuously operating open flames (for example an operating gas appliance) or other POTENTIAL IGNITION SOURCES (for example an operating electric heater, hot surfaces). A flame-producing device may be installed in the same space if the device is provided with an effective flame arrest;
- for appliances using A2L REFRIGERANTS connected via an air duct system to one or more rooms, a warning with the substance of the following: “Auxiliary devices which may be a POTENTIAL IGNITION SOURCE shall not be installed in the duct work. Examples of such POTENTIAL IGNITION SOURCES are hot surfaces with a temperature exceeding X °C and electric switching devices”.

**NOTE: X is the maximum allowable surface temperature as defined in 22.117.**

The manufacturer should specify other potential continuously operating sources known to cause ignition of the refrigerant used.

The appliance shall be stored so as to prevent mechanical damage from occurring.

- for appliances using A2L refrigerants connected via an air duct system to one or more rooms, a warning that only auxiliary devices approved by the appliance manufacturer or declared suitable with the refrigerant shall be installed in connecting ductwork. The manufacturer shall list in the instructions all approved auxiliary devices by manufacturer and model number for use with the specific

appliance, if those devices have a potential to become an ignition source.

- a warning that if appliances connected via an air duct system to one or more rooms with A2L REFRIGERANTS are installed in a room with an area less than 4min as determined in Clause GG.2. or installed in a room with an EFFECTIVE DISPERSAL VOLUME VED less than the minimum as determined by Clause 101.DVN.8, that room shall be without continuously operating open flames (e.g. an operating gas appliance) or other POTENTIAL IGNITION SOURCES (for e.g. an operating electric heater, hot surfaces). A flame-producing device may be installed in the same space if the device is provided with an e ective flame arrest.
- for REFRIGERANT DETECTION SYSTEMS, the function and operation and required servicing measures;
- for LIMITED LIFE REFRIGERANT SENSORS Used in REFRIGERANT DETECTION SYSTEMS, the specified end-of-life and replacement instructions;
- REFRIGERANT SENSORS for REFRIGERANT DETECTION SYSTEMS Shall Only be replaced with sensors specified by the appliance manufacture; and instructions to verify actuation of mitigation actions per Annex GG or Annex 101.DVN as applicable.

20. Transportation, marking and storage for units that employ flammable refrigerants
    a. General

    The following information is provided for units that employ FLAMMABLE REFRIGERANTS.

    b. Transport of equipment containing flammable refrigerants

    Attention is drawn to the fact that additional transportation regulations may exist with respect to equipment containing flammable gas. The maximum number of pieces of equipment or the configuration of the equipment permitted to be transported together will be determined by the applicable transport regulations.

    c. Marking of equipment using signs

    Signs for similar appliances used in a work area are generally addressed by local regulations and give the minimum requirements for the provision of safety and/or health signs for a work location.

    All required signs are to be maintained and employers should ensure that employees receive suitable and sufficient instruction and training on the meaning of appropriate safety signs and the actions that need to be taken in connection with these signs.

    The effectiveness of signs should not be diminished by too many signs being placed together.

    Any pictograms used should be as simple as possible and contain only essential details.

    d. Disposal of equipment using flammable refrigerants

    See national regulations.

    e. Storage of equipment/appliances

    The storage of the appliance should be in accordance with the applicable regulations or instructions, whichever is more stringent.

    f. Storage of packed (unsold) equipment

    Storage package protection should be constructed in such a way that mechanical damage to the equipment inside the package will not cause a leak of the REFRIGERANT CHARGE.

    The maximum number of pieces of equipment permitted to be stored together will be determined by local regulations.

| | | |
|---|---|---|
| | **WARNING** | This symbol shows that this appliance used a flammable refrigerant. If the refrigerant is leaked and exposed to an external ignition source, there is a risk of fire. |
| | **CAUTION** | This symbol shows that the operation manual should be read carefully. |
| | **CAUTION** | This symbol shows that a service personnel should be handling this equipment with reference to the installation manual. |
| | **CAUTION** | |
| | **CAUTION** | This symbol shows that information is available such as the operating manual or installation manual. |

**Table 1 — A (min)**

Ho, release height ft (m)

| MC or Mrel Refrigerant Charge Amount pounds (kilograms) | Mc or Mrel lbs ( kg) | ≤ 7.2 (2.2) | 7.5 (2.3) | 7.9 (2.4) | 8.5 (2.6) | 9.2 (2.8) | 9.8 (3.0) |
|---|---|---|---|---|---|---|---|
| | ≤ 3.91 (1.776) | 12 (1.10) | | | | | |
| | 4.0 (1.8) | 60 (5.53) | 57 (5.29) | 55 (5.07) | 50 (4.68) | 47 (4.34) | 44 (4.05) |
| | 4.4 (2.0) | 66 (6.14) | 63 (5.88) | 61 (5.63) | 56 (5.2) | 52 (4.83) | 48 (4.5) |
| | 4.9 (2.2) | 73 (6.76) | 70 (6.46) | 67 (6.19) | 62 (5.72) | 57 (5.31) | 53 (4.95) |
| | 5.3 (2.4) | 79 (7.37) | 76 (7.05) | 73 (6.76) | 67 (6.24) | 62 (5.79) | 58 (5.41) |
| | 5.7 (2.6) | 86 (7.99) | 82 (7.64) | 79 (7.32) | 73 (6.76) | 68 (6.27) | 63 (5.86) |
| | 6.2 (2.8) | 93 (8.6) | 89 (8.23) | 85 (7.88) | 78 (7.28) | 73 (6.76) | 68 (6.31) |
| | 6.6 (3.0) | 99 (9.21) | 95 (8.81) | 91 (8.45) | 84 (7.8) | 78 (7.24) | 73 (6.76) |
| | 7.1 (3.2) | 106 (9.83) | 101 (9.4) | 97 (9.01) | 90 (8.32) | 83 (7.72) | 78 (7.21) |
| | 7.5 (3.4) | 112 (10.44) | 108 (9.99) | 103 (9.57) | 95 (8.84) | 88 (8.2) | 82 (7.66) |
| | 7.9 (3.6) | 119 (11.06) | 114 (10.58) | 109 (10.14) | 101 (9.36) | 94 (8.69) | 87 (8.11) |
| | 8.4 (3.8) | 126 (11.67) | 120 (11.16) | 115 (10.7) | 106 (9.88) | 99 (9.17) | 92 (8.56) |
| | 8.8 (4.0) | 132 (12.29) | 126 (11.75) | 121 (11.26) | 112 (10.4) | 104 (9.65) | 97 (9.01) |
| | 9.3 (4.2) | 139 (12.9) | 133 (12.34) | 127 (11.82) | 117 (10.91) | 109 (10.14) | 102 (9.46) |
| | 9.7 (4.4) | 145 (13.51) | 139 (12.93) | 133 (12.39) | 123 (11.43) | 114 (10.62) | 107 (9.91) |
| | 10.1 (4.6) | 152 (14.13) | 145 (13.51) | 139 (12.95) | 129 (11.95) | 119 (11.1) | 112 (10.36) |
| | 10.6 (4.8) | 159 (14.74) | 152 (14.1) | 145 (13.51) | 134 (12.47) | 125 (11.58) | 116 (10.81) |
| | 11 (5.0) | 165 (15.36) | 158 (14.69) | 152 (14.08) | 140 (12.99) | 130 (12.07) | 121 (11.26) |
| | 11.5 (5.2) | 172 (15.97) | 164 (15.28) | 158 (14.64) | 145 (13.51) | 135 (12.55) | 126 (11.71) |
| | 11.9 (5.4) | 179 (16.58) | 171 (15.86) | 164 (15.2) | 151 (14.03) | 140 (13.03) | 131 (12.16) |
| | 12.3 (5.6) | 185 (17.2) | 177 (16.45) | 170 (15.77) | 157 (14.55) | 145 (13.51) | 136 (12.61) |
| | 12.8 (5.8) | 192 (17.81) | 183 (17.04) | 176 (16.33) | 162 (15.07) | 151 (14) | 141 (13.06) |
| | 13.2 (6.0) | 198 (18.43) | 190 (17.63) | 182 (16.89) | 168 (15.59) | 156 (14.48) | 145 (13.51) |
| | 13.7 (6.2) | 205 (19.04) | 196 (18.21) | 188 (17.45) | 173 (16.11) | 161 (14.96) | 150 (13.96) |
| | 14.1 (6.4) | 212 (19.66) | 202 (18.8) | 194 (18.02) | 179 (16.63) | 166 (15.44) | 155 (14.41) |
| | 14.6 (6.6) | 218 (20.27) | 209 (19.39) | 200 (18.58) | 185 (17.15) | 171 (15.93) | 160 (14.86) |
| | 15 (6.8) | 225 (20.88) | 215 (19.98) | 206 (19.14) | 190 (17.67) | 177 (16.41) | 165 (15.32) |
| | 15.4 (7.0) | 231 (21.5) | 221 (20.56) | 212 (19.71) | 196 (18.19) | 182 (16.89) | 170 (15.77) |
| | 15.9 (7.2) | 238 (22.11) | 228 (21.15) | 218 (20.27) | 201 (18.71) | 187 (17.37) | 175 (16.22) |

**Amin** is the required minimum room area in ft2/m2.
**mc** is the actual refrigerant charge in the system in lbs (kg).
**mREL** is the refrigerant releasable charge in lbs (kg).
**hinst** is the height of the bottom of the unit relative to the floor of the room after installation.
**Ho** is the vertical distance in feet (meters) from the floor to the point of release when the appliance is installed.
**Ho** release height = install height

## For R454B refrigerant charge amount and minimum room area:

For R454B refrigerant charge amount and minimum room area:

The indoor and outdoor units are designed to be used together. Check the unit you purchased. The height of the room cannot be less than 7.3ft/2.2m, and the minimum room area of operating or storage should be as specified in Table 1:

.

**WARNING**

SAFETY SHUT-OFF VALVES default to fully closed position when the appliance is de-energized, so refrigerant will not be completely released even when it was dismantled. Ensure the complete release of refrigerant through one of following methods before repairing the unit.

Method 1: Release refrigerant while the machine is powered on.

Method 2: Remove the coil of safety shut-off valve before power-off.

Method 3: Manually open the safety shut-off valve using a magnetic ring.

# CAPACITY

### Table 2 — Compatible Indoor Units

| MODEL | INDOOR UNIT | OUTDOOR UNIT |
|---|---|---|
| 09K | D5FEHAA09XCK | D5CERAA09AAK |
| 12K (115V) | D5FEHAA12XCJ | D5CERAA12AAJ |
| 12K | D5FEHAA12XCK | D5CERAA12AAK |
| 18K | D5FEHAA18XCK | D5CERAA18AAK |
| 24K | D5FEHAA24XCK | D5CERAA24AAK |

# ACCESSORIES

### Table 3 — Accessories

| NAME OF ACCESSORIES | QUANTITY | IMAGE |
|---|---|---|
| Installation Manual | 1 | |
| Drain Joint | 1 | |
| Seal | 1 | |
| Mounting Plate and Cardboard Template | 1+1 | |
| Anchor | 5 | |
| Mounting Plate Screw | 5 | |
| Flare Nut | 2 | |

* To be installed on the back of main air filter by authorized technician while installing the unit.

### Table 4 — Pipe Specification

| NAME | MODEL | LIQUID SIDE | GAS SIDE | REMARK |
|---|---|---|---|---|
| Connecting pipe assembly | 9K | Φ1/4 i n (Φ6.35mm) | Φ3/8 i n (Φ9.52mm) | Parts you must purchase separately. Consult the dealer about the proper pipe size of the unit you purchased. |
| | 12K | Φ1/4 i n (Φ6.35mm) | Φ3/8 i n (Φ9.52mm) | |
| | 18K | Φ1/4 i n (Φ6.35mm) | Φ1/2 i n (Φ12.7mm) | |
| | 24K | Φ3/8 i n (Φ9.52mm) | Φ5/8 i n (Φ16mm) | |

**Manufacturer reserves the right to change, at any time, specifications and designs without notice and without obligations.**

# DIMENSIONS

## Table 5 — Dimensions and Weights

| System Size | | 12K 115V | 9K | 12K | 18K | 24K |
|---|---|---|---|---|---|---|
| | | (115 V) | (208/230 V) | (208/230 V) | (208/230 V) | (208/230 V) |
| Height (H) | inch | 19.49 | 19.49 | 19.49 | 21.85 | 21.81 |
| | mm | 495 | 495 | 495 | 555 | 554 |
| Width (W) | inch | 28.35 | 28.35 | 28.35 | 30.12 | 31.69 |
| | mm | 720 | 720 | 720 | 765 | 805 |
| Depth (D) | inch | 10.63 | 10.63 | 10.63 | 11.93 | 12.99 |
| | mm | 270 | 270 | 270 | 303 | 330 |
| Weight -Net | lbs. | 50.26 | 46.96 | 47.84 | 59.97 | 67.02 |
| | kg | 22.8 | 21.3 | 21.7 | 27.2 | 30.4 |

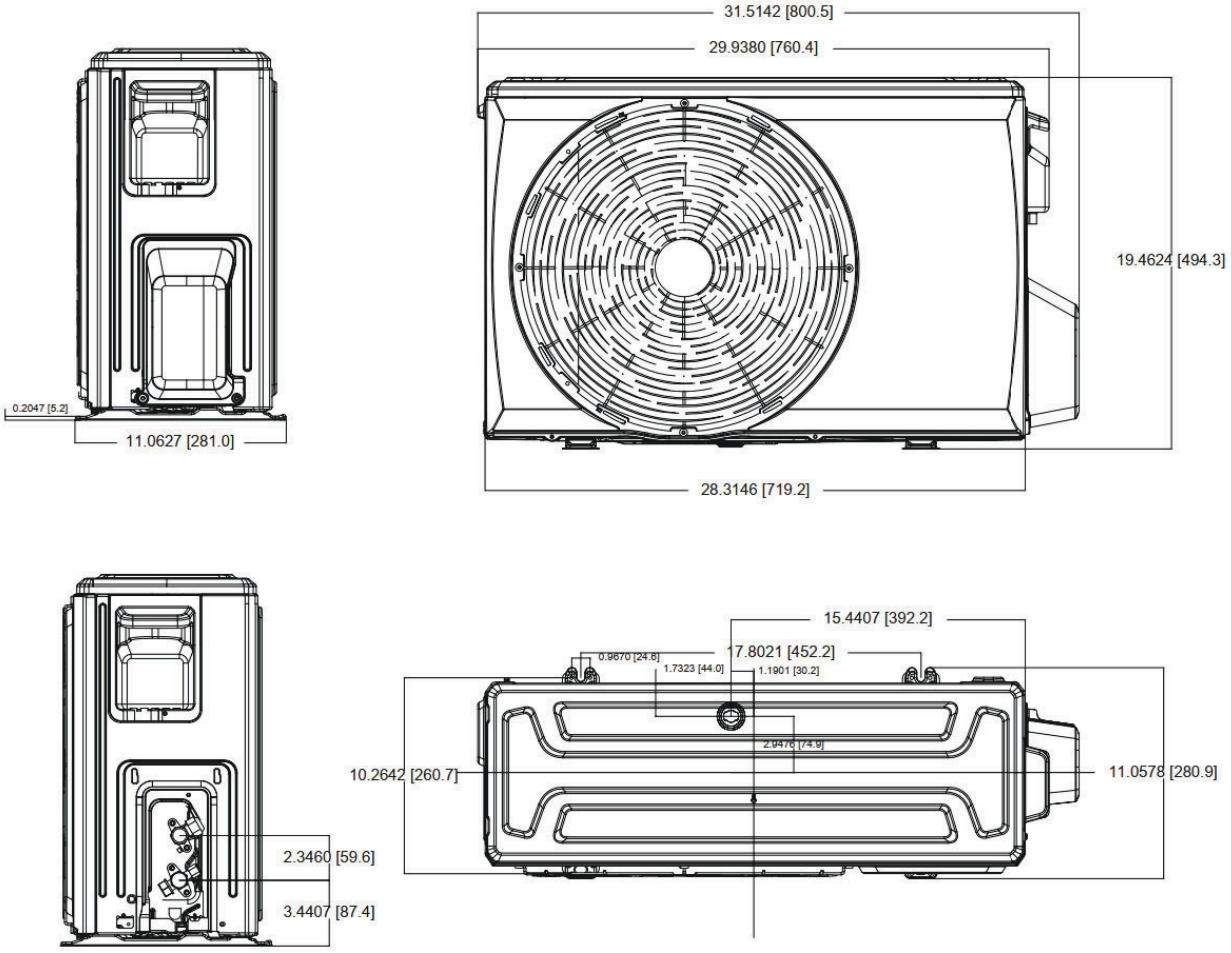


**Fig. 2 —Dimensions (9k/12k)**

# DIMENSIONS (CONT.)

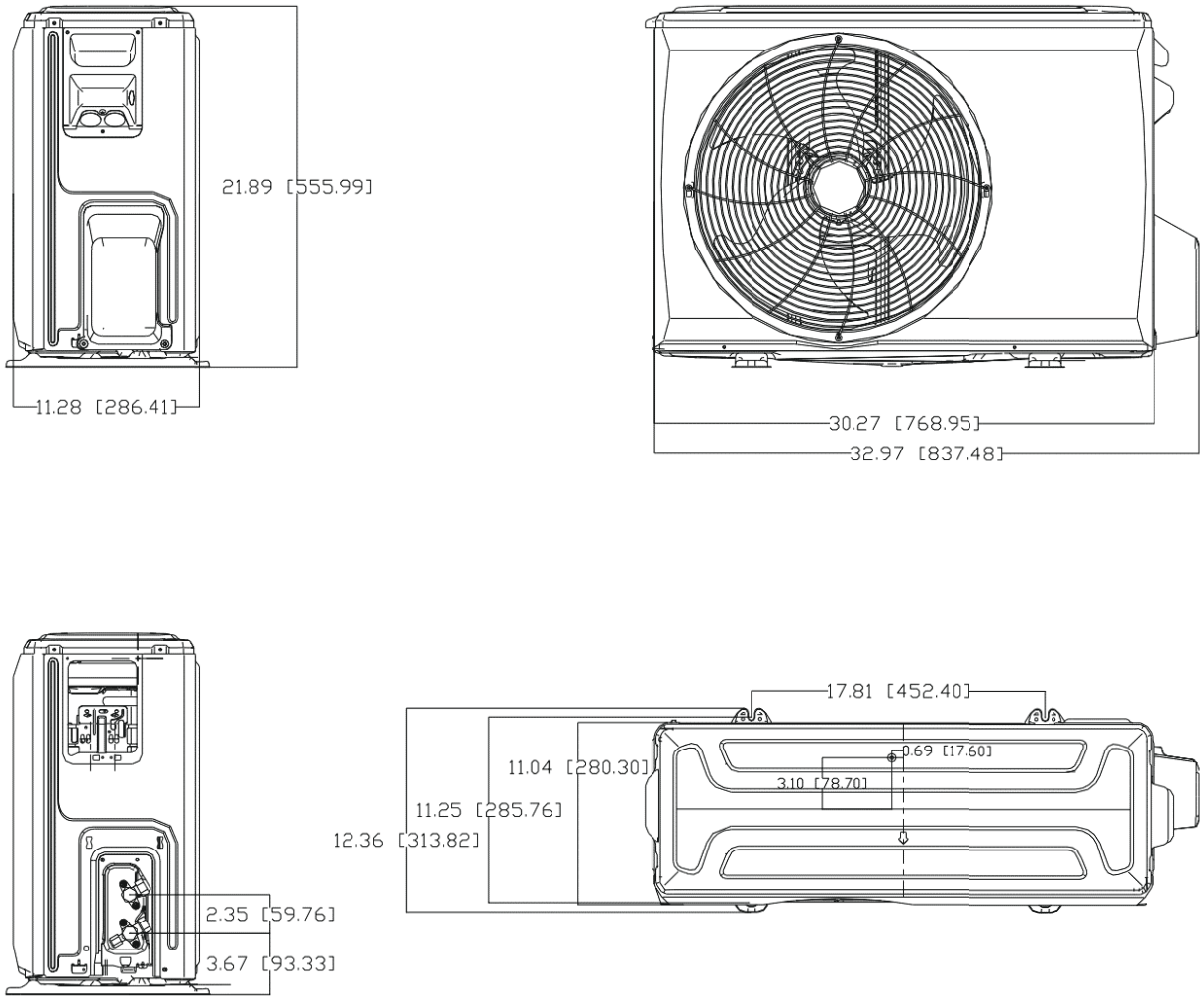


**Fig. 3 —Dimensions (18k)**

# DIMENSIONS (CONT.)

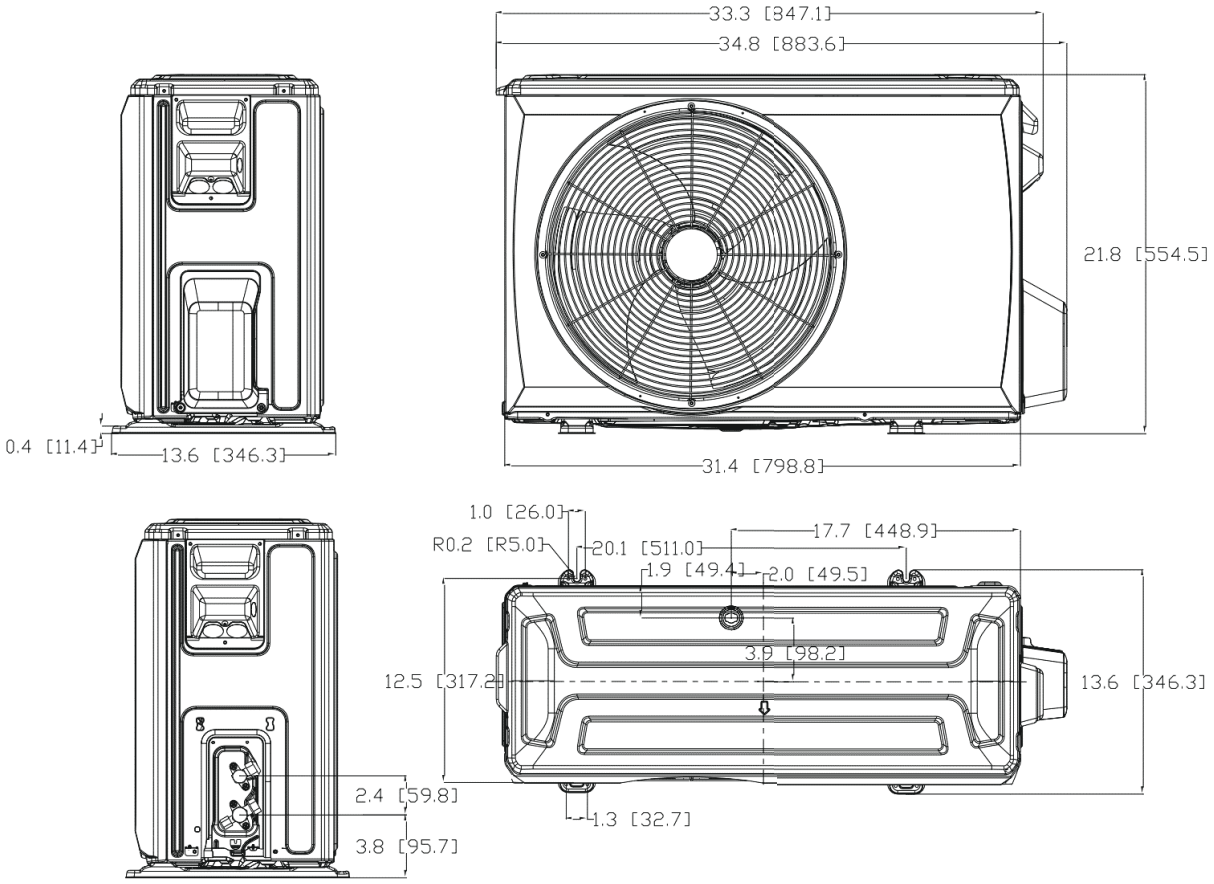


**Fig. 4 —Dimensions (24k)**

# CLEARANCES

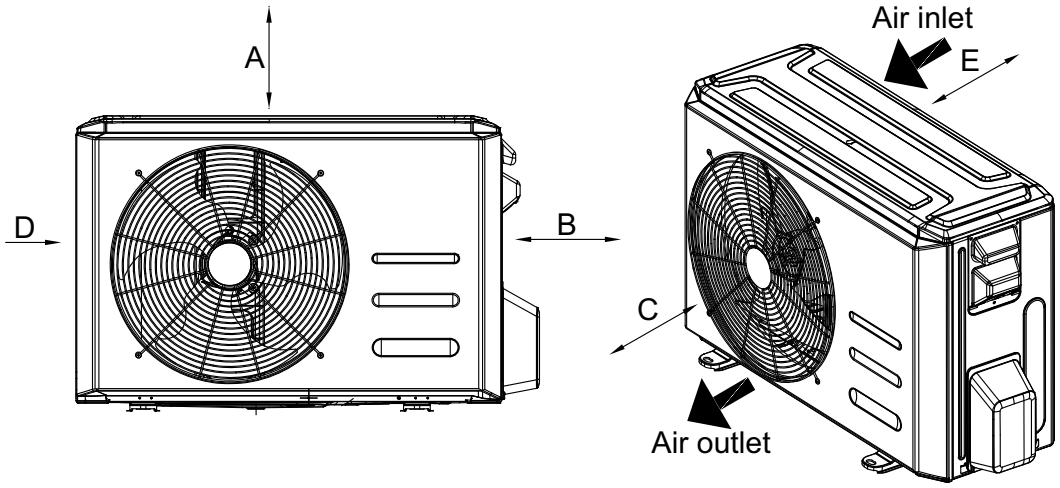


**Fig. 5 — Outdoor Unit Clearances**

**Table 6 — Outdoor Unit Clearance Dimensions**

| UNIT | MINIMUM VALUE in. (mm) |
|---|---|
| A | 20 (500) |
| B | 14 (350) |
| C | 20 (500) |
| D | 4 (100) |
| E | 4 (100) |

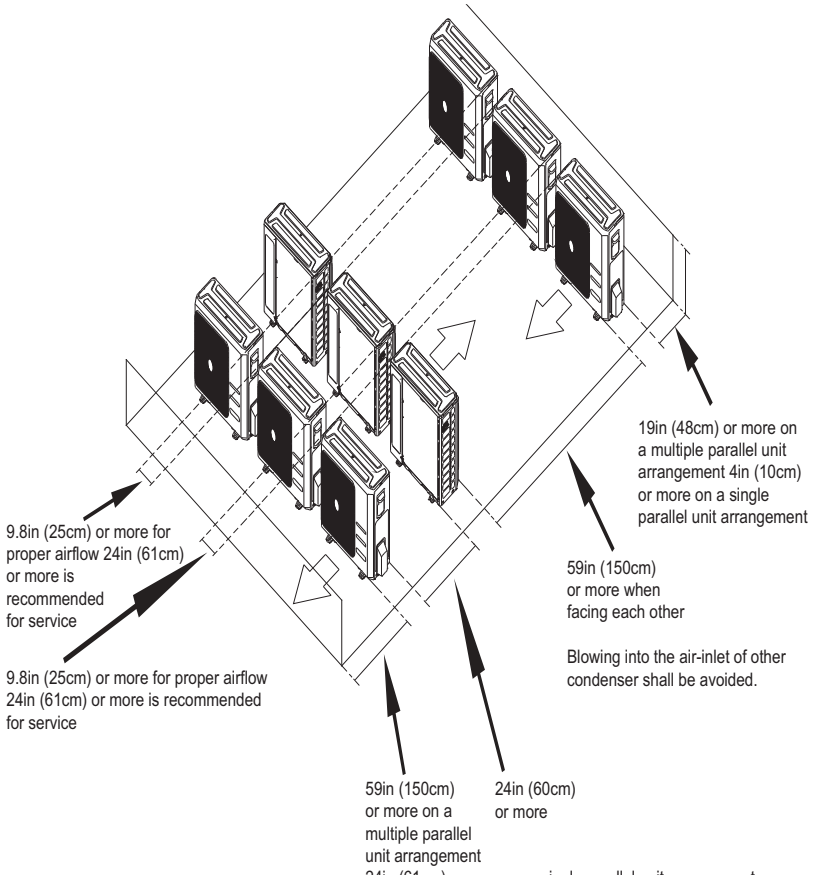


**Fig. 6 —Clearances for multiple units**

# INSTALLATION

## OVERVIEW

**NOTE: Illustrations in this manual are for explanatory purposes. The actual shape of your indoor unit may be slightly different. The actual shape shall prevail.**

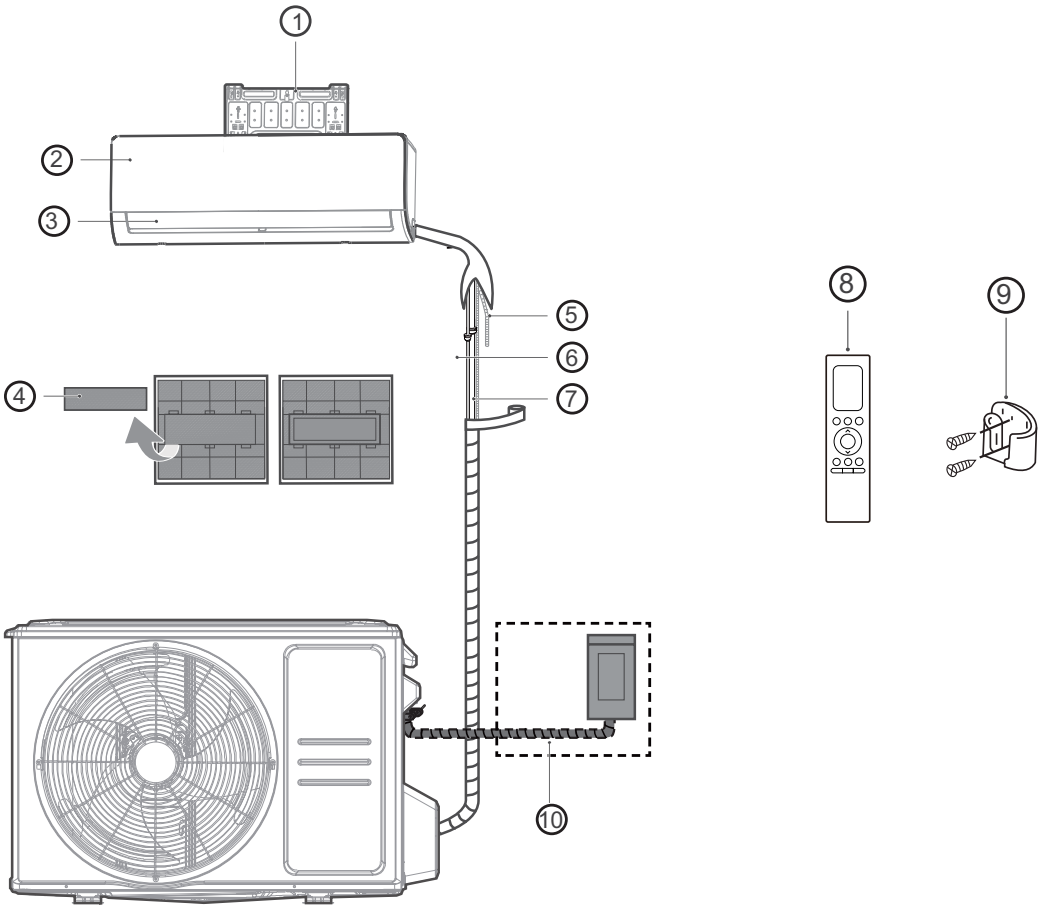


| | | | | | |
|---|---|---|---|---|---|
| 1 | Wall Mounting Plate | 5 | Drain Pipe | 8 | Remote Controller |
| 2 | Front Panel | 6 | Connection Cable | 9 | Remote controller Holder |
| 3 | Louver | 7 | Refrigerant Piping | 10 | Outdoor Unit Power Cable |
| 4 | Air Filter | | | | |

**Fig. 7 —Installation Overview**

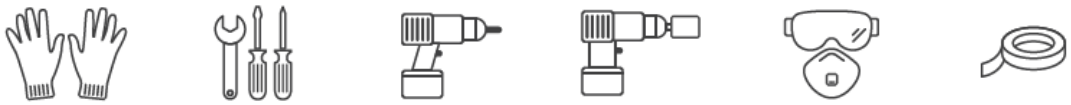

Gloves | Screwdriver and Wrench | Hammer/Drill | Core Drill | Goggles and Mask | Vinyl Tape

**Fig. 8 —Tools Required**

# INSTALL THE OUTDOOR UNIT

1. **Select installation location**

**NOTE: Prior to Installation**

**Before installing the outdoor unit, you must choose an appropriate location. The following are standards that will help you choose an appropriate location for the unit.**

**Proper installation locations meet the following standards:**

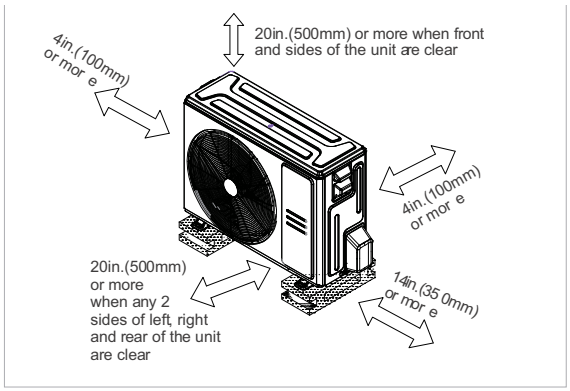


☑ Meets all spatial requirements shown in Installation Space Requirements above.

☑ Good air circulation and ventilation.

☑ Firm and solid—the location can support the unit and will not vibrate.

☑ Noise from the unit will not disturb other people.

☑ Protected from prolonged periods of direct sunlight or rain.

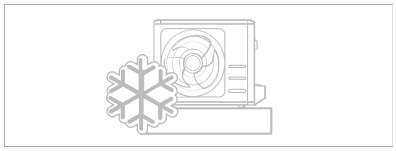

☑ Where snowfall is anticipated, take appropriate measures to prevent ice buildup and coil damage.

**NOTE: Install the unit by following local codes and regulations, there may be differ slightly between different regions.**

**DO NOT install unit in the following locations:**

- Near an obstacle that will block air inlets and outlets.
- Near a public street, crowded areas, or where noise from the unit will disturb others.
- Near animals or plants that will be harmed by hot air discharge.
- Near any source of combustible gas.
- In a location that is exposed to large amounts of dust
- In a location exposed to a excessive amounts of salty air.

## INSTALL DRAIN JOINT

**NOTE: Before bolting the outdoor unit in place, you must install the drain joint at the bottom of the unit. For the units with base pan built-in with multiple holes for proper draining during defrost, the drain joint does not need to be installed.**

1. Find the base pan hole of outdoor unit.

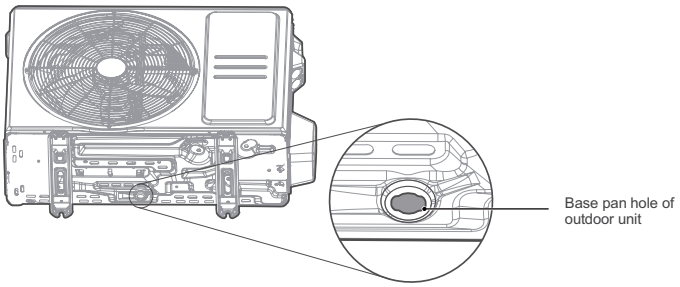


**Base Pan Hole**

2. Fit the rubber seal on the end of the drain joint that will connect to the outdoor unit.
3. Insert the drain joint into the hole in the base pan of the unit. The drain joint will click in place.
4. Connect a drain hose extension (not included) to the drain joint to redirect water from the unit during heating mode.

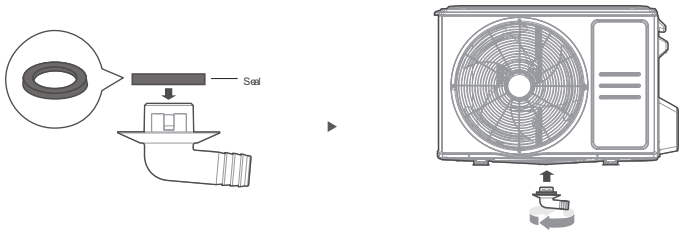


**Fig. 9 —Drain Hose Extension**

**NOTE: IN COLD CLIMATES**

**In cold climates, make sure that the drain hose is as vertical as possible to ensure swift water drainage. If water drains too slowly, it can freeze in the hose and flood the unit.**

## ANCHOR OUTDOOR UNIT

**WARNING**

WHEN DRILLING INTO CONCRETE, EYE PROTECTION IS RECOMMENDED AT ALL TIME.

- The outdoor unit can be anchored to the ground or to a wall-mounted bracket with bolt(M10). Prepare the installation base of the unit according to the dimensions below.
- The following is a list of different outdoor unit sizes and the distance between their mounting feet. Prepare the installation base of the unit according to the dimensions below.

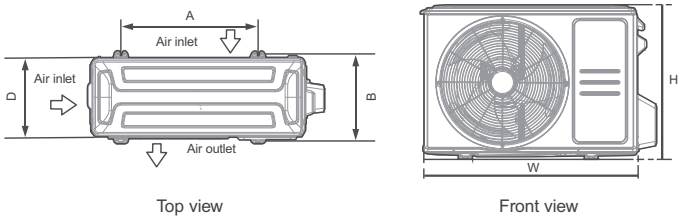


**Table 7 — Mounting Dimensions**

| Unit Capacity | Outdoor Unit Dimensions HxWxD | Mounting Dimensions | |
|---|---|---|---|
| | | Distance A | Distance B |
| 9K-12K | 19.5in x 28.3in x 10.6in (495mm x 720mm x 270mm) | 17.8in (452mm) | 10.0in (255mm) |
| 18K | 21.8in x 30.1in x 11.9in (555mm x 765mm x 303mm) | 17.8in (452mm) | 11.3in (286mm) |
| 24K | 21.8in x 31.7in x 13.0in (554mm x 805mm x 330mm) | 20.1in (511mm) | 12.5in (317mm) |

**If you install the unit on the ground or on a concrete mounting platform, do the following:**

- Mark the positions for four expansion bolts based on dimensions chart.
- Pre-drill holes for expansion bolts.
- Place a nut on the end of each expansion bolt. Hammer expansion bolts into the pre-drilled holes.
- Remove the nuts from expansion bolts, and place outdoor unit on bolts.
- Put washer on each expansion bolt, the replace the nuts.
- Using a wrench, tighten each nut until snug.

**If you install the unit on a wall-mounted bracket, do the following:**

- Mark the position of bracket holes based on dimensions chart.
- Pre-drill the holes for the expansion bolts.
- Place a washer and nut on the end of each expansion bolt. Thread expansion bolts through holes in mounting brackets, put mounting brackets in position, and hammer expansion bolts into the wall.
- Check that the mounting brackets are level.
- Carefully lift unit and place its mounting feet on brackets.
- Bolt the unit firmly to the brackets.
- If allowed, install the unit with rubber gaskets to reduce vibrations and noise.

**CAUTION**

Make sure that the wall is made of solid brick, concrete, or of similarly strong material.

The wall must be able to support at least four times the weight of the unit.

# REFRIGERANT PIPING

## PIPING CONNECTION PRECAUTIONS

**WARNING**

WHEN CONNECTING REFRIGERANT PIPING, DO NOT LET SUBSTANCES OR GASES OTHER THAN THE SPECIFIED REFRIGERANT ENTER THE UNIT. THE PRESENCE OF OTHER GASES OR SUBSTANCES WILL LOWER THE UNIT'S CAPACITY, AND CAN CAUSE ABNORMALLY HIGH PRESSURE IN THE REFRIGERATION CYCLE. THIS CAN CAUSE EXPLOSION AND INJURY.

### NOTE ON PIPE LENGTH

**The length of refrigerant piping will affect the performance and energy efficiency of the unit. Nominal efficiency is tested on units with a pipe length of 25ft(7.5m). A minimum pipe run of 10ft(3m) is**

**Table 9 — Pipe Specifications**

| Name | Model | Liquid Side | Gas Side | Remarks |
|---|---|---|---|---|
| Connecting Pipe Assembly | 9K | Φ1/4 i n (Φ6.35mm) | Φ3/8 i n (Φ9.52mm) | Parts you must purchase separately. Consult the dealer about the proper pipe size of the unit you purchased. |
| | 12K | Φ1/4 i n (Φ6.35mm) | Φ3/8 i n (Φ9.52mm) | |
| | 18K | Φ1/4 i n (Φ6.35mm) | Φ1/2 i n (Φ12.7mm) | |
| | 24K | Φ3/8 i n (Φ9.52mm) | Φ5/8 i n (Φ16mm) | |

## CONNECTION INSTRUCTIONS FOR REFRIGERANT PIPING

1. Cut Pipes

When preparing refrigerant pipes, take extra care to cut and flare them properly. This will ensure efficient operation and minimize the need for future maintenance.

– Measure the distance between the indoor and outdoor units.
– Using a pipe cutter, cut the pipe a little longer than the measured distance.
– Make sure that the pipe is cut at a perfect 90° angle.

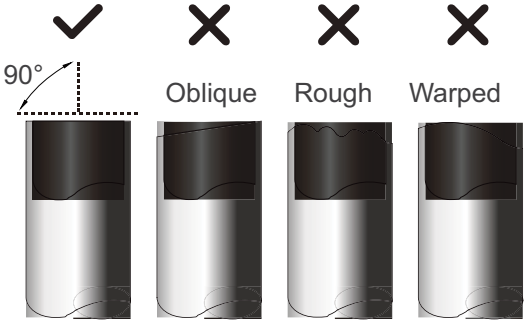


**Fig. 10 —Cut Pipes**

**CAUTION**

The end of the pipe must be checked for cracks and flaring. Ensure the pipe is sealed.

2. Remove Burrs

Burrs can affect the air-tight seal of refrigerant piping connection. They must be completely removed.

- Hold the pipe at a downward angle to prevent burrs from falling into the pipe.
- Using a reamer or deburring tool, remove all burrs from the cut section of the pipe.

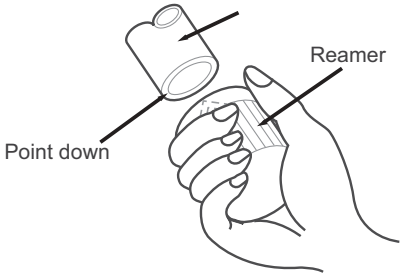


**Fig. 11 —Hold Pipe to Prevent Burrs from Falling**

3. Flare pipe ends

Proper flaring is essential to achieve an airtight seal.

a. After removing burrs from cut pipe, seal the ends with PVC tape to prevent foreign materials from entering the pipe.
b. Sheath the pipe with insulating material.
c. Place flare nuts on both ends of pipe. Make sure they are facing in the right direction, because you can't put them on or change their direction after flaring.

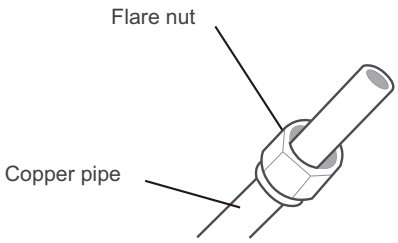


**Fig. 12 —Flare Pipe Ends**

- Remove PVC tape from ends of pipe when ready to perform flaring work.
- Clamp flare form on the end of the pipe. The end of the pipe must extend beyond the edge of the flare form in accordance with the dimensions shown in the table below.

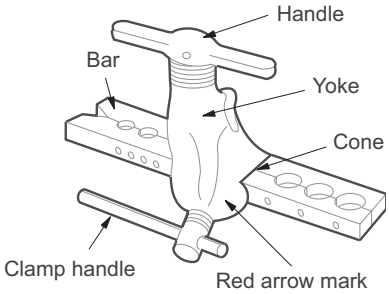


**Fig. 13 —Clamp Flare Form on End of Pipe**

**Table 10 — Piping Extension Beyond Flare Form**

| Outer Diameter of Pipe | A | |
|---|---|---|
| | Minimum | Maximum |
| Ø 1/4in (Ø 6.35mm) | 0.0275in (0.7mm) | 0.05in (1.3mm) |
| Ø 3/8in (Ø 9.52mm) | 0.04in (1.0mm) | 0.063in (1.6mm) |
| Ø1/2in (Ø 12.7mm) | 0.04in (1.0mm) | 0.07in (1.8mm) |
| Ø 5/8in (Ø 16mm) | 0.078in (2.0mm) | 0.086in 2.2mm) |

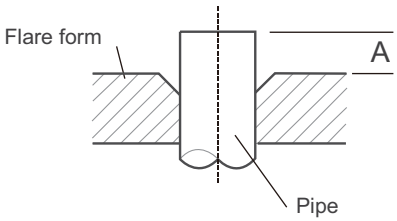


**Fig. 14 —Piping Extension Beyond Flare Form**

- Place flaring tool onto the form.
- Turn the handle of the flaring tool clockwise until the pipe is fully flared.
- Remove the flaring tool and flare form, then inspect the end of the pipe for cracks and even flaring.

## REFER TO TORQUE REQUIREMENT TO CONNECT PIPES

**⚠ CAUTION**

When connecting refrigerant pipes, be careful not to use excessive torque or to deform the pipe in any way. You should first connect the low pressure pipe and then the high pressure pipe.

MINIMUM BEND RADIUS

When bending connective refrigerant piping, the minimum bending radius is 4in (10cm).

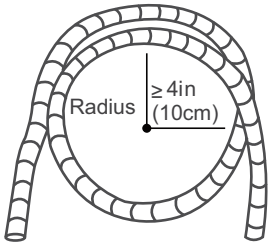


### INSTRUCTIONS FOR CONNECTING PIPING TO INDOOR UNIT

1. Align the center of the two pipes that you will connect.

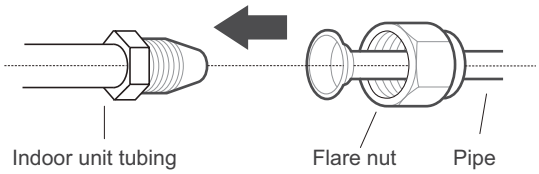


**Fig. 15 —Align Center of Two Pipes**

2. Tighten the flare nut as tightly as possible by hand.
3. Using a wrench, grip the nut on the unit tubing.
4. While firmly gripping the nut on the unit tubing, use a torque wrench to tighten the flare nut according to the torque values in the Torque Requirements table below. Loosen the flaring nut slightly, then tighten again.

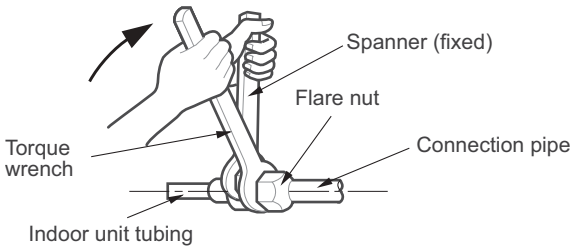


**Fig. 16 —Tighten the Flare Nut**

**Table 11 — Torque Requirements**

| Outer Diameter of Pipe | Tightening Torque | Flare dimension (B) | Flare shape |
|---|---|---|---|
| Ø 1/4in (Ø 6.35mm) | 13.28 ~ 14.75 ft.lbs. 18~20 N.m | 0.33~0.34in (8.4~8.7mm) | 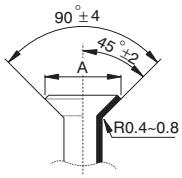  |
| Ø 3/8in (Ø 9.52mm) | 23.6 ~ 28.76 ft.lbs. 32~39 N.m | 0.52~0.53in (13.2~13.5mm) | |
| Ø1/2in (Ø 12.7mm) | 36.14 ~ 43.51 ft.lbs. 49~59 N.m | 0.64~0.65in (16.2~16.5mm) | |
| Ø 5/8in (Ø 16mm) | 42 ~ 52.37 ft.lbs. 57~71 N.m | 0.76~0.78in (19.2~19.7mm) | |

**CAUTION**

**DO NOT USE EXCESSIVE TORQUE**
Excessive force can break the nut or damage the refrigerant piping. You must not exceed torque requirements shown in Table 11.

## CONNECTING PIPING TO OUTDOOR UNIT

1. Unscrew the cover from the packed valve on the side of the outdoor unit.

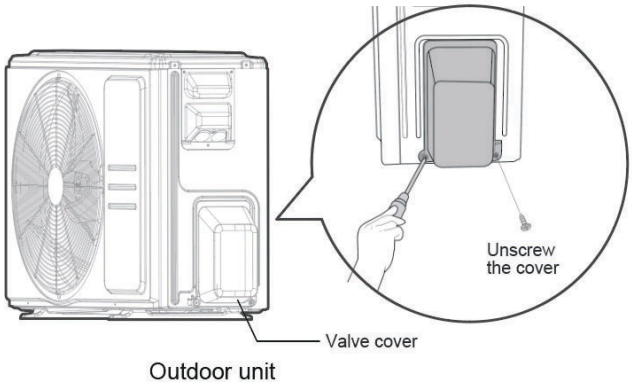


**Fig. 17 —Unscrew Cover**

2. Remove protective caps from ends of valves.
3. Align flared pipe end with each valve, and tighten the flare nut as tightly as possible by hand.
4. Using a wrench, grip the body of the valve. Do not grip the nut that seals the service valve.

**CAUTION**

**USE WRENCH TO GRIP MAIN BODY OF VALVE**
Torque from tightening the flare nut can snap off other parts of valve.

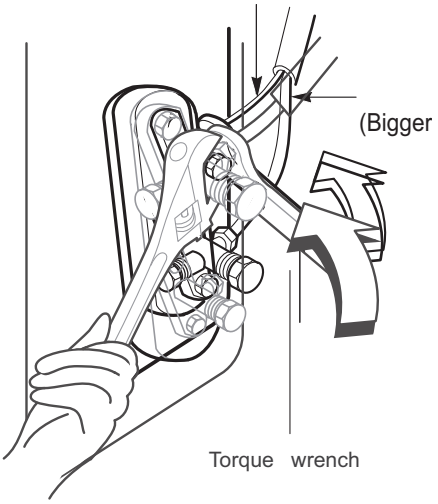


**Fig. 18 —Torque Flare Nut**

5. While firmly gripping the body of the valve, use a torque wrench to tighten the flare nut according to the correct torque values.
6. Loosen the flaring nut slightly, then tighten again.
7. Repeat Steps 5 and 6 for the remaining pipe.

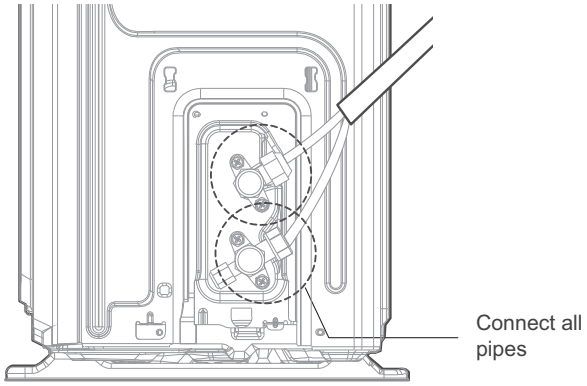


**Fig. 19 —Tighten Flare Nut**

# AIR EVACUATION

## NOTE: PREPARATIONS AND PRECAUTIONS

**Air and foreign matter in the refrigerant circuit can cause abnormal rises in pressure, which can damage the air conditioner, reduce its efficiency, and cause injury. Ensure to evacuate the air inside the indoor unit and pipes with vacuum pump. Use a vacuum pump and manifold gauge to evacuate the refrigerant circuit, removing any non-condensable gas and moisture from the system. Evacuation should be performed upon initial installation and when unit is relocated. Incorrect installation due to ignoring of the Instruction will cause serious problem to the machine.**

### BEFORE PERFORMING EVACUATION

- **Make sure the connective pipes between the indoor and outdoor units are connected properly.**
- **Check to make sure all wiring is connected properly.**

### EVACUATION INSTRUCTIONS

1. Connect the charge hose of the manifold gauge to service port on the outdoor unit's low pressure valve.
2. Connect another charge hose from the manifold gauge to the vacuum pump.
3. Open the Low Pressure side of the manifold gauge. Keep the High Pressure side closed.
4. Turn on the vacuum pump to evacuate the system.
5. Run the vacuum for at least 15 minutes, or until the vacuum measured using micron gauge to 500 microns. Close the Low Pressure side of the manifold gauge, and turn off the vacuum pump. Wait for 5 minutes, then check that there has been no change in system pressure.

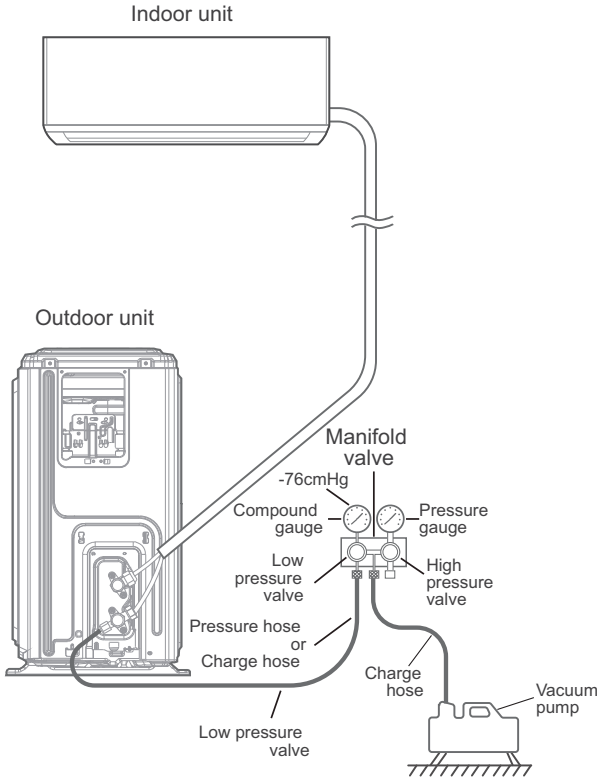


**Fig. 20 —Evacuation Instructions**

6. If there is a change in system pressure, refer to Gas Leak Check section for information on how to check for leaks.
7. If there is no change in system pressure, unscrew the cap from the packed valve (high pressure valve). Insert hexagonal wrench into the packed valve(high pressure valve) and open the valve by turning the wrench in a 1/4 counterclockwise turn. Listen for gas to exit the system, then close the valve after 5 seconds.
8. Watch the Pressure Gauge for one minute to make sure that there is no change in pressure. The Pressure Gauge should read slightly higher than atmospheric pressure.
9. Remove the charge hose from the service port.
10. Using hexagonal wrench, fully open both the high pressure and low pressure valves.
11. Tighten valve caps on all three valves (service port, high pressure, low pressure) by hand. You may tighten it further using a torque wrench if needed.

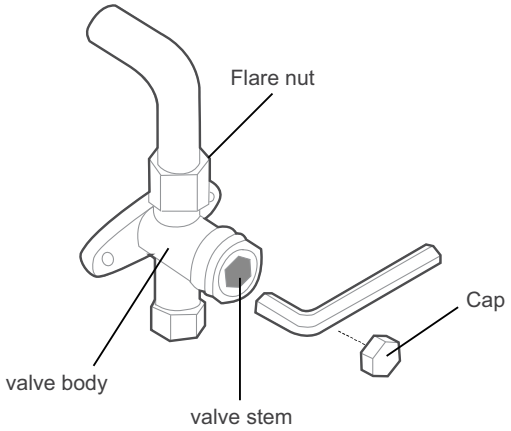


**Fig. 21 —Tighten Valve Caps**

## ⚠ CAUTION

**OPEN VALVE STEMS GENTLY**
Be sure to open all the valves after evacuation. When opening valve stems, turn the hexagonal wrench until it hits against the stopper. Do not try to force the valve to open further.

## NOTE ON ADDING REFRIGERANT:

**Some systems require additional charging depending on pipe lengths. The standard pipe length is 25 feet. The refrigerant should be charged from the service port on the outdoor unit's low pressure valve. The additional refrigerant to be charged can be calculated using the following formula:**

**Table 12 — Additional Refrigerant Per Pipe Length**

| Connective Pipe Length (m) | Air Purging Method | Additional Refrigerant | |
|---|---|---|---|
| < Standard pipe length | Vacuum Pump | N/A | |
| >Standard pipe length | Vacuum Pump | Liquid Side: Ø 1/4in (Ø 6.35mm)<br>R454B:<br>Pipe length-standard length x.0.16 oz/ft(15 g/m) | Liquid Side: Ø 3/8in(Ø 9.52mm)<br>R454B:<br>Pipe length-standard length x0.32 oz/ft(30 g/m) |

## NOTE: DO NOT MIX REFRIGERANT TYPES

**Make sure the additional amount of refrigerant to be charged is based on the pipe size and length.**

## Table 13 — Electrical Data

| Outdoor Unit | | 12K 115V | 9K | 12K | 18K | 24K |
|---|---|---|---|---|---|---|
| | | (115V) | (208/230V) | (208/230V) | (208/230V) | (208/230V) |
| Minimum Circuit Ampacity (MCA) | A | 19 | 9.9 | 14 | 16 | 19 |
| Maximum Overcurrent Protection Ampacity (MOPA) | A | 20 | 15 | 15 | 20 | 20 |
| Voltage-Phase-Frequency | | 115-1-60 | 208/230-1-60 | | | |
| Max – Min Voltage Range | | 127-104 | 253-187 | | | |
| **Cooling (with entry tier high wall CO IDU)** | | | | | | |
| Running current | (A) | 10.3 | 5.1 | 4.3 | 6.8 | 8.7 |
| Power consumption | (W) | 958 | 720 | 958 | 1549 | 2157 |

# WIRING

**WARNING**

Before performing any electrical work, read these regulations.

Before performing any electrical work or wiring work, turn off the main power to the system.

1. All wires must be sized per NEC (National Electrical Code) or CEC (Canadian Electrical Code) and local codes. Use Electrical Data table MCA (minimum circuit amps) and MOCP (maximum over current protection) to correctly size the wires and the disconnect fuse or breakers respectively.
2. All electrical connections must be made according to the Electrical Connection Diagram located on the panels of the indoor and outdoor units.
3. If there is a serious safety issue with the power supply, stop work immediately. Explain your reasoning to the client, and refuse to install the unit until the safety issue is properly resolved.
4. If connecting power to fixed wiring, a surge protector and main power switch should be installed.
5. Only connect the unit to an individual branch circuit outlet. Do not connect another appliance to that outlet.
6. Make sure to properly ground the air conditioner.
7. Every wire must be firmly connected. Loose wiring can cause the terminal to overheat, resulting in product malfunction and possible fire.
8. Do not let wires touch or rest against refrigerant tubing, the compressor, or any moving parts within the unit.
9. To avoid getting an electric shock, never touch the electrical components soon after the power supply has been turned off. After turning off the power, always wait 10 minutes or more before you touch the electrical components.

**WARNING**

All wiring must be performed strictly in accordance with the wiring diagram located on the back of the Indoor Unit's front panel.

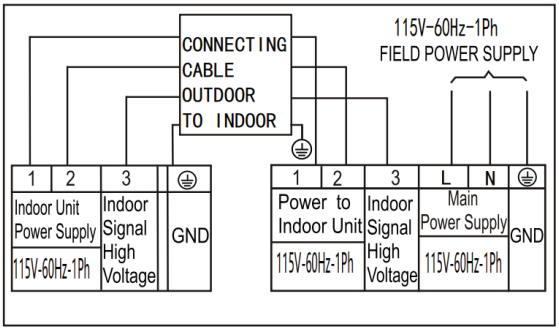


**Fig. 22 —Connection Diagram 12K (115V)**

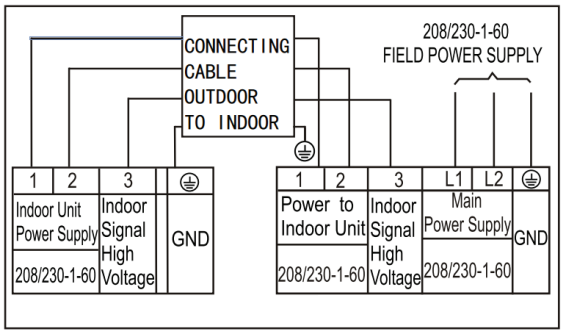


**Fig. 23 —Connection Diagram 9K-24K (230V)**

## CONNECT SIGNAL AND POWER CABLES

**WARNING**

- All wiring work must be performed strictly in accordance with the wiring diagram located inside of the wiring cover of the outdoor unit.
- Before performing any electrical or wiring work, turn off the main power to the system.

The outside unit's terminal block is protected by an electrical wiring cover on the side of the unit. A comprehensive wiring diagram is printed on the inside of the wiring cover.

1. Remove the wire cover from the unit by loosening the 3 screws.
2. Dismount caps on the conduit panel.
3. Temporarily mount the conduit tubes (not included) on the conduit panel.
4. Properly connect both the power supply and low voltage lines to the corresponding terminals on the terminal block.
5. Ground the unit in accordance with local codes.
6. Be sure to size each wire allowing several inches longer than the required length for wiring.
7. Use lock nuts to secure the conduit tubes.

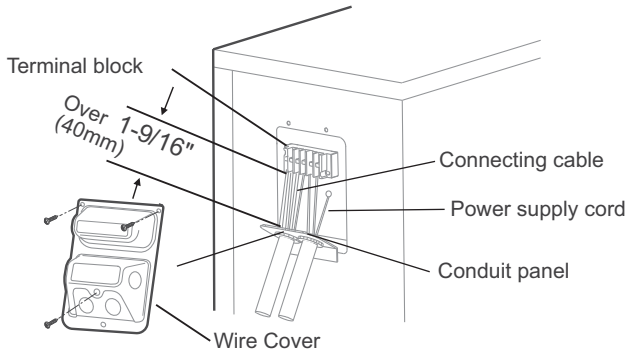


**Fig. 24 —Mount and Secure Conduit Tubes**

8. Be sure to select the appropriate through-hole according to the diameter of the wire.

## CONNECT THE WIRE LINES

1. Treat the end of the wire as shown in Fig. 25.

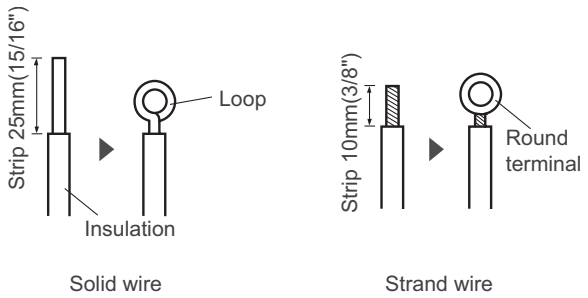


**Fig. 25 —End of the Wire**

2. Connect the line to the corresponding terminals on the terminal block.

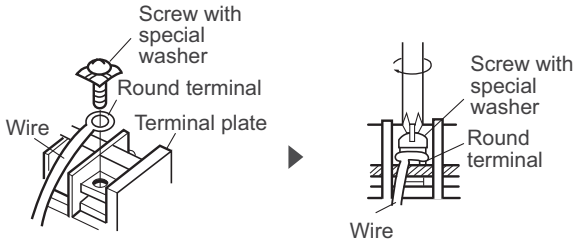


**Fig. 26 —Connect Lines to Terminals**

## ELECTRICAL AND GAS LEAK CHECKS

**WARNING**

**RISK OF ELECTRIC SHOCK**
ALL WIRING MUST COMPLY WITH LOCAL AND NATIONAL ELECTRICAL CODES, AND MUST BE NSTALLED BY A LICENSED ELECTRICIAN.

**CAUTION**

**BEFORE TEST RUN**
Only perform test run after you have completed the following steps:

- Electrical Safety Checks – Confirm that the unit's electrical system is safe and operating properly
- Gas Leak Checks – Check all flare nut connections and confirm that the system is not leaking
- Confirm that gas and liquid (high and low pressure) valves are fully open

## ELECTRICAL SAFETY CHECKS

**After installation, confirm that all electrical wiring is installed in accordance with local and national regulations, and according to the Installation Manual.**

## BEFORE TEST RUN

**Check Grounding Work**

**Measure grounding resistance by visual detection and with grounding resistance tester.**

## DURING TEST RUN

**Check for Electrical Leakage**

During the Test Run, use an electroprobe and multimeter to perform a comprehensive electrical leakage test.

If electrical leakage is detected, turn off the unit immediately and call a licensed electrician to find and resolve the cause of the leakage.

**NOTE: This may not be required for some locations in North America.**

## GAS LEAK CHECKS

**Soap and Water Method**

Using a soft brush, apply soapy water or liquid detergent to all pipe connection points on the indoor unit and outdoor unit. The presence of bubbles indicates a leak.

## AFTER PERFORMING GAS LEAK CHECKS

After confirming that the all pipe connection points DO NOT leak, replace the valve cover on the outside unit.

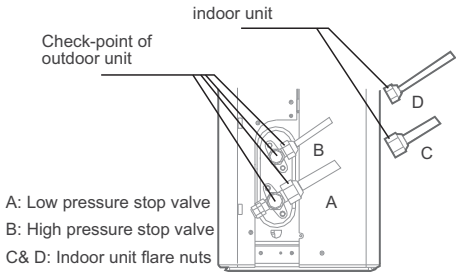


**Fig. 27 —Gas Leak Checks**

When the unit detects a refrigerant leak, reference Table 2 on page 9 for the minimum airflow of the indoor unit.

# TEST RUN

**WARNING**

**BEFORE TEST RUN**

Only perform test run after you have completed the following steps:

**Electrical Safety Checks** – Confirm that the unit's electrical system is safe and operating properly

**Gas Leak Checks** – Check all flare nut connections and confirm that the system is not leaking

Confirm that gas and liquid (high and low pressure) valves are fully open

## TEST RUN INSTRUCTIONS

You should perform the Test Run for at least 30 minutes.

- Connect power to the unit.
- Press the ON/OFF button on the remote controller to turn it on.
- Press the MODE button to scroll through the following functions, one at a time:
  - COOL–Select lowest possible temperature
  - HEAT–Select highest possible temperature
- Let each function run for 5 minutes, and perform the following checks:

**Table 14 — Checks to Perform**

| List of Checks to Perform | Pass | Fail |
|---|---|---|
| No electrical leakage | | |
| Unit is properly grounded | | |
| All electrical terminals properly covered | | |
| Indoor and outdoor units are solidly installed | | |
| All pipe connection points do not leak | Outdoor (2) | Indoor (2) |
| Water drains properly from drain hose | | |
| All piping is properly insulated | | |
| Unit performs COOL function properly | | |
| Unit performs HEAT function properly | | |

## DOUBLE-CHECK PIPE CONNECTIONS

During operation, the pressure of the refrigerant circuit will increase. This may reveal leaks that were not present during your initial leak check. Take time during the Test Run to double-check that all refrigerant pipe connection points do not have leaks. Refer to Gas Leak Check section for instructions.

After the Test Run is successfully completed, and you confirm that all checks points in List of Checks to Perform have PASSED, do the following:

a. Using remote control, return unit to normal operating temperature.
b. Using insulation tape, wrap the indoor refrigerant pipe connections that you left uncovered during the indoor unit installation process.

## IF AMBIENT TEMPERATURE IS BELOW 60°F (16°C)

You cannot use the remote controller to turn on the COOL function when the ambient temperature is below 60°F(16°C). In this instance, you can use the MANUAL CONTROL button to test the COOL function.

a. Lift the front panel of the indoor unit, and raise it until it clicks in place.
b. The MANUAL CONTROL button is located on the right-hand side of the unit. Press it 2 times to select the COOL function.
c. Perform Test Run as normal.

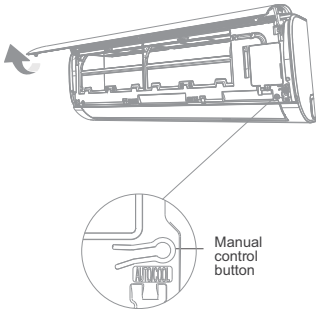


**Fig. 28 —Manual Control Button**

# CARE AND MAINTENANCE

To help ensure high performance and minimize possible equipment failure, periodic maintenance must be performed on this equipment. Maintenance frequency may vary depending upon geographic areas.

# TROUBLESHOOTING

For ease of service, the systems are equipped with diagnostic code display LEDs on both the indoor and outdoor units. The outdoor diagnostic display has one red LED on the outdoor unit board and is limited to very few errors. The indoor diagnostic display is a combination of flashing LEDs on the display panel or the front of the unit. There may be a few error codes displayed in the indoor unit that might relate to the outdoor unit's problems. If possible, always check the diagnostic codes displayed on the indoor unit first.

# PACKING AND UNPACKING THE UNIT

## UNPACKING OUTDOOR UNIT:

1. Cut the packing belt.
2. Take the unit out of the carton.
3. Remove the foam from the unit.
4. Remove the packaging bag from the unit.

## PACKING OUTDOOR UNIT:

1. Put the outdoor unit into the packing bag.
2. Put the bottom foam into the box.
3. Put the unit into the carton, then put the upper packaging foam on the unit.
4. Close the carton and seal it with the tape.
5. Using the packing belt if necessary.

# ERROR CODES

## Table 15 — Error Codes

| Display | Malfunction and Protection Indication | Display | Malfunction and Protection Indication |
|---|---|---|---|
| EC07 | Outdoor DC fan motor speed out of control | PC11 | ODL DC bus voltage too high protection |
| EC51 | ODU EEPROM error | PC12 | ODL DC bus voltage too low protection |
| EC52 | Condenser coil temperature sensor (T3) error | PC30 | System pressure overload protection |
| EC53 | ODU temperature sensor (T4) error | PC31 | System pressure too low protection |
| EC54 | ODU exhaust temperature sensor error | PC40 | Communication failure between outdoor main control chip and driver chip |
| EC55 | ODU IPM module temperature sensor error | PC41 | Compressor current sampling circuit failure |
| EC56 | ODU T2B sensor | PC42 | Compressor starting failure |
| EH00 | IDU EEPROM error | PC43 | Compressor lost phrase protection |
| EH0A | Indoor EEPROM Parameter error | PC44 | Compressor zero speed protection |
| EH02 | Zero-crossing signal detection error | PC45 | Voltage drop |
| EH03 | Indoor fan motor speed is out of control | PC46 | Compressor speed out of control |
| EH31 | Protection for low DC bus voltage of the external fan | PC49 | Compressor over current error |
| EH32 | Protection for high DC bus voltage of the external fan | PC0A | Condenser high temperature protection |
| EH60 | IDU ENV temperature T1 sensor error | PC0F | PFC failure |
| EH61 | IDU pipe temperature T2 sensor error | PC0L | Outdoor low temperature protection |
| EH06 | IDU PCB and display communication error | PH09 | IDU anti-cold wind stop machine |
| FH0C | Indoor Unit humidity sensor malfunction | PH90 | Evaporator high temperature protection |
| EL01 | IDU and ODU Communication Error | PH91 | Evaporator low temperature protection |
| FH0P | Wireless Module Self-Test Failure | LC01 | Condenser high temperature frequency limited (L1) |
| FL09 | New and old platform mismatch failure | LC02 | Compressor Discharge Pipe High temperature frequency limited (L2) |
| PC00 | ODU IPM Protection | LC03 | Current frequency limited (L3) |
| PC01 | ODU Voltage Protection | LC05 | Voltage frequency limited (L5) |
| PC02 | Compressor top temperature (IPM module temperature protection) | LC06 | IPM module temperature frequency limited |
| PC03 | System Pressure Protection | LH00 | Evaporator temperature frequency limited (L0) |
| PC08 | ODL Current Protection | | Remote Control frequency limitation in effect |
| PC10 | ODL AC voltage too low protection | --- | Mode conflict fault |

# DUCTLESS START-UP CHECKLIST

## Installation Data

**Site Address:**_____

**City:**_____ **State:**_____ **Zip Code:**_____

**Installing Contractor**:_____ **Contractor Contact #:** (  ) _____-_____

**Job Name:**_____ **Start-up Date:**_____

**Distributor:**_____

## System Details

| Units | Model No. | Serial No. | Controller |
|---|---|---|---|
| OUTDOOR UNIT | | | |
| INDOOR UNIT A | | | |

## Wiring Electrical

Wire Size and Type Used? AWG:_____ TYPE:_____

Are there any breaks, splices, wire nuts or butt connectors between the outdoor unit and the indoor door unit? YES:_____ NO:_____

Was the wiring from the outdoor unit port to the correct indoor unit verified? YES:_____ NO:_____

**REMARKS:**_____

_____

## Voltage Check

**Wiring: Single zone** _____

| | | | | | | |
|---|---|---|---|---|---|---|
| Outdoor Unit Disconnect | 1(L1):GND | | Outdoor Unit Terminal Block | 1(L1):GND | | NOTES:_____ |
| | 2(L2):GND | | | 2(L2):GND | | |
| | 1(L1):L2(2) | | | 1(L1):2(L2) | | |
| Indoor Unit Voltage Check @ Outdoor Unit | 1(L1):GND | | Indoor Unit Voltage Check @ Indoor Unit | 1(L1):GND | | NOTES:_____ |
| | 2(L2):GND | | | 2(L2):GND | | |
| | 1(L1):2(L2) | | | 1(L1):2(L2) | | |
| | 2(L2):3(S) | | | 2(L2):3(S) | | |

Manufacturer reserves the right to change, at any time, specifications and designs without notice and without obligations.

# Ductless Start-Up Checklist (CONT)

## Piping

**Leak Check:**

System held 500 psig (max. 550psi) for a minimum of 30 minutes using dry nitrogen. YES:_____ NO:_____

**Evacuation Method:**

- **Was the Triple Evacuation Method used as outlined in the installation manual? YES:_____ NO:_____**
- **Was the Deep Vacuum Method used as outlined in the installation manual? YES:_____ NO:_____**
- **Did the System Hold 500 microns for 1 hour? YES:_____ NO:_____**
- **Does the line set match the diameter of the evaporator connections? YES:_____ NO:_____**

**Single Zone Piping:**

Has the liquid pipe length been measured and the additional charge calculated? Size:_____ Length:_____ Charge:_____

| **Notes:** |
|---|
| |
| |
| |
| |

| PORT | LIQUID SIZE | | SUCTION SIZE | | LENGTH | CHARGE | NOTES:_____ |
|---|---|---|---|---|---|---|---|
| A | | | | | | | _____ |
| | | | | | | | _____ |

## Performance Check

**For 1:1 Single Zone Systems:** Adjust the set-point to create an operational call for the desired testing operation. Allow the system to run for a minimum of 10 min. and record the following details:

(Operational data recorded on applicable heads with the wireless remote controller's Point Check function)

| UNIT | SET-POINT | MODE | T1 | T2 | T3 | T4 | Tb | Tp | Th | LA/Lr |
|---|---|---|---|---|---|---|---|---|---|---|
| A | | | | | | | | | | |

## Error Codes

Were there any error codes present at start-up? YES:_____ NO:_____

| | | **Notes:** |
|---|---|---|
| Indoor Unit Error Code: | | |
| Outdoor Unit Error Code: | | |
| Wall Controller: | | |
| 24V Interface: | | |

## Comments:

_____

_____

_____

© 2024 Carrier. All rights reserved.
Edition Date: 11/24
**Catalog No: D5CERAA-01SI**
Replaces: NEW

**Manufacturer reserves the right to change, at any time, specifications and designs without notice and without obligations.**