**D5CUHA**
**Outdoor Unit Variable Speed Heat Pump**
**Sizes 18K to 60K**

# SERVICE MANUAL

**TABLE OF CONTENTS**


PAGE

SAFETY CONSIDERATIONS . . . . . 1
INTRODUCTION . . . . . 1
MODEL NUMBER NOMENCLATURE . . . . . 2
WIRING . . . . . 3
CONNECTION DIAGRAMS . . . . . 3
WIRING DIAGRAMS . . . . . 4
REFRIGERANT CYCLE DIAGRAM. . . . . 8
REFRIGERANT LINES. . . . . 14
SYSTEM EVACUATION AND CHARGING . . . . . 15
ELECTRONIC FUNCTIONS . . . . . 16
OUTDOOR UNIT POINT CHECK FUNCTION . . . . . 20
GENERAL TROUBLESHOOTING . . . . . 22
ERROR CODES. . . . . 24
TROUBLESHOOTING BY ERROR CODE. . . . . 26
CHECK PROCEDURES . . . . . 61
DISASSEMBLY INSTRUCTIONS. . . . . 65
APPENDIX. . . . . 91


## SAFETY CONSIDERATIONS

Installing, starting up, and servicing air-conditioning equipment can be hazardous due to system pressures, electrical components, and equipment location (roofs, elevated structures, etc.). Only trained, qualified installers and service mechanics should install, start-up, and service this equipment.

Untrained personnel can perform basic maintenance functions such as coil cleaning. All other operations should be performed by trained service personnel.

When working on the equipment, observe precautions in the product literature and on tags, stickers, and labels attached to the equipment.

Follow all safety codes. Wear safety glasses and work gloves. Keep a quenching cloth and fire extinguisher nearby when brazing. Use care in handling, rigging, and setting bulky equipment.

Read this manual thoroughly and follow all warnings or cautions included in the literature and attached to the unit. Consult local building codes and National Electrical Code (NEC) for special requirements. Recognize safety information. This is the safety-alert symbol ⚠. When you see this symbol on the unit and in instructions or manuals, be alert to the potential for personal injury.

Understand these signal words: **DANGER**, **WARNING**, and **CAUTION**. These words are used with the safety-alert symbol. **DANGER** identifies the most serious hazards which **will** result in severe personal injury or death. **WARNING** signifies hazards which **could** result in personal injury or death. **CAUTION** is used to identify unsafe practices which **may** result in minor personal injury or product and property damage. **NOTE** is used to highlight suggestions which **will** result in enhanced installation, reliability, or operation.

**⚠ WARNING**

**ELECTRICAL SHOCK HAZARD**
Failure to follow this warning could result in personal injury or death.

Before installing, modifying, or servicing system, main electrical disconnect switch must be in the **OFF** position. There may be more than 1 disconnect switch. Lock out and tag switch with a suitable warning label.

**⚠ WARNING**

**EXPLOSION HAZARD**
Failure to follow this warning could result in death, serious personal injury, and/or property damage. Never use air or gases containing oxygen for leak testing or operating refrigerant compressors. Pressurized mixtures of air or gases containing oxygen can lead to an explosion.

**⚠ CAUTION**

**EQUIPMENT DAMAGE HAZARD**
Failure to follow this caution may result in equipment damage or improper operation.Do not bury more than 36 in. (914 mm) of refrigerant pipe in the ground. If any section of pipe is buried, there must be a 6 in. (152 mm) vertical rise to the valve connections on the outdoor units.

If more than the recommended length is buried, refrigerant may migrate to the cooler buried section during extended periods of system shutdown. This causes refrigerant slugging and could possibly damage the compressor at start-up.

## INTRODUCTION

This service manual provides the necessary information to service, repair, and maintain the D5CUHA family of heat pumps. This manual has an “APPENDIX” on page 91 with data required to perform troubleshooting. Use the “TABLE OF CONTENTS” on page 1 to locate a desired topic.

# MODEL NUMBER NOMENCLATURE

| SYSTEM TONS | BTUh | VOLTAGE | MODEL |
|---|---|---|---|
| 1.5 | 18,000 | 208/230-1 | D5CUHAH18AAK |
| 2 | 24,000 | 208/230-1 | D5CUHAH24AAK |
| 2.75 | 30,000 | 208/230-1 | D5CUHAH30AAK |
| 3 | 36,000 | 208/230-1 | D5CUHAH36AAK |
| 4 | 48,000 | 208/230-1 | D5CUHAH48AAK |
| 5 | 60,000 | 208/230-1 | D5CUHAH60AAK |

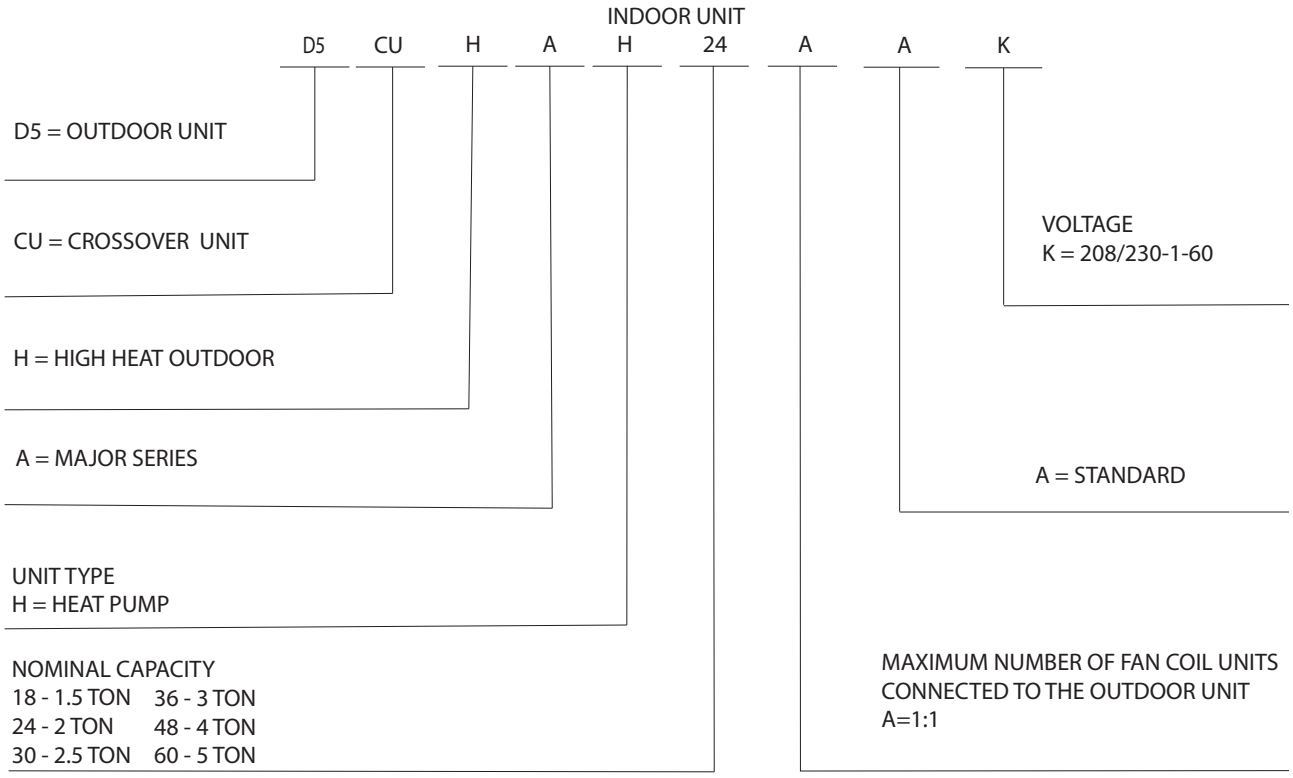


**Fig. 1 —Nomenclature**

For the ICP brand the SERIAL NUMBER will be date coded by a "V", year (last 2 digits of calendar year), week (2 digits, "01" thru "52") followed with a unique 5 digit sequential number that starts at "40000" and cannot exceed "49999". After reaching 49999 the numbers start over at 40000 again. The model number and serial numbers must comply with Carrier MFG-02.

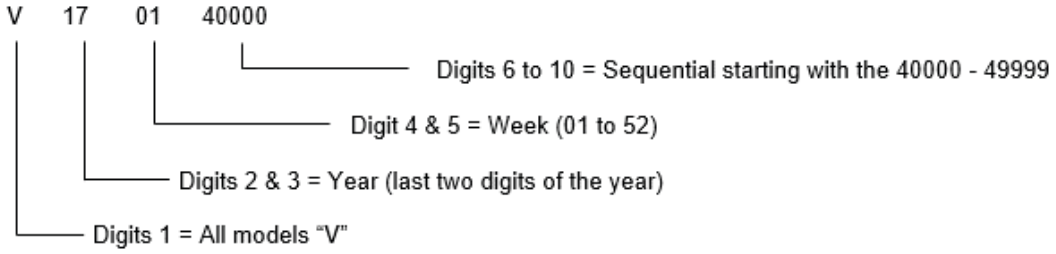


**Fig. 2 —Serial Number Nomenclature**

Use of the AHRI Certified TM Mark indicates a manufacturer's participation in the program For verification of certification for individual products, go to www.ahridirectory.org.

# WIRING

## ELECTRICAL WIRING INSTALLATION

Wiring for the outdoor unit must conform to NEC (National Electrical Code) or CEC (Canadian Electrical Code) and local codes. Use Electrical Data table MCA (minimum circuit amps) and MOCP (maximum over current protection) to correctly size the wires and the disconnect fuse or breakers respectively.

All field wiring construction should be finished by a qualified electrician.

Air conditioning equipment must be grounded according to the local electrical codes.

Provide electrical disconnect per local codes.

**NOTE: DO NOT connect the power wire to the terminal of the signal wire. Connection of power to any other terminal other than L1 or L2 will cause damage to the control board.**

Any control signal cable should be run separately from the power wiring.

Use of metallic conduit or shielded cable is recommended. Maintain a distance of 12 inches(300mm) from the power wiring.

**NOTE: DO NOT run the power wiring and control wiring in the same conduit.**

Size the wiring in accordance to the NEC / CEC. Select different colors for different wire according to relevant regulations.

Ensure that the wire color of the outdoor and the terminal number are the same as those of the indoor unit.

**⚠ CAUTION**

**EQUIPMENT DAMAGE HAZARD**

Failure to follow this caution may result in equipment damage or improper operation.

Be sure to comply with local codes while running wire from the indoor unit to the outdoor unit.

Wires should be sized based on NEC and local codes.

Every wire must be connected firmly. Loose wiring may cause the terminal to overheat or result in unit malfunction. A fire hazard may also exist. Ensure all wiring is tightly connected.

No wire should touch the refrigerant tubing, compressor or any moving parts.

Disconnecting means must be provided and shall be located within sight and readily accessible from the air conditioner.

**NOTE:** Matches with multi-family and residential fan coils require separate power for the indoor and outdoor unit. The KSAIC0701230 Crossover Interface is required for compatibility with multi-family and residential fan coils. Refer to the KSAIC0701230 Crossover Interface Installation Manual for wiring instructions.

**Communication Wiring:** Use 16 to 18 AWG wire with a length up to the system max piping length. It is recommended to use 16 AWG stranded shielded wire for RS 485 communication between the indoor and outdoor units. For retrofitting applications, 18 AWG thermostat wire may be reused provided the wire:

1. Is not coiled, creating a potential EMI field
2. Contains no splices for the wires chosen to be used
3. All unused wires are grounded to the ODU
4. The thermostat wire is in good working condition
5. There are no nearby sources of EMI. Some examples of EMI sources include, but are not limited to transformers, power lines, refrigerators, microwaves, Bluetooth speakers, and Wi-Fi routers and modems.

**If communication problems occur with the use of 18 AWG thermostat wire it will be required to replace the wire with 16 AWG stranded shielded wire.**

# CONNECTION DIAGRAMS

**Table 1 – Terminal Functions and Definitions**

| TERMINAL MAIN PCB | FUNCTION DEFINITION | TERMINAL 24V COMMUNICATION PLATE | FUNCTION DEFINITION |
|---|---|---|---|
| CN11/CN12 | Input 208/230VAC, external power input terminal | CN37 | Output 208/230VAC, four-way valve port |
| CN4 | Input 208/230VAC, communication port with 24V small board | CN15/CN17 | Input 208/230VAC, 24V small board power input terminal |
| CN26 | Output 5V,T3/T4/TP Sensor port | CN14 | Input 208/230VAC, communication port with main board |
| CN29 | Output 5V, high and low switch port | CN12 | Output 5V, suction temp. sensor/refrigerant temp. sensor port |
| CN32 | Output 310V, DC fan port | CN9 | Output 12V, electronic expansion valve port |
| W/U/V | Output 310V, compressor port | CN8 | Output 5V, pressure sensor port |
| CN38 | Output 208/230VAC, compressor electric heating port | CN2 | Input 24V, 24V communication port |
| CN24 | Output 208/230VAC, chassis electric heating port | CN5 | Output 5V, 485 communication port |

**NOTE:** The 24v terminals at CN2 are prohibited from use as a standard method of communication due to compliance issues. They can be used for the purposes of emergency operation, service procedures, and troubleshooting only. Consult the Installation Manual wiring diagrams for approved wiring methods for proper operation, regulatory compliance, and ability to meet published performance ratings.

# WIRING DIAGRAMS

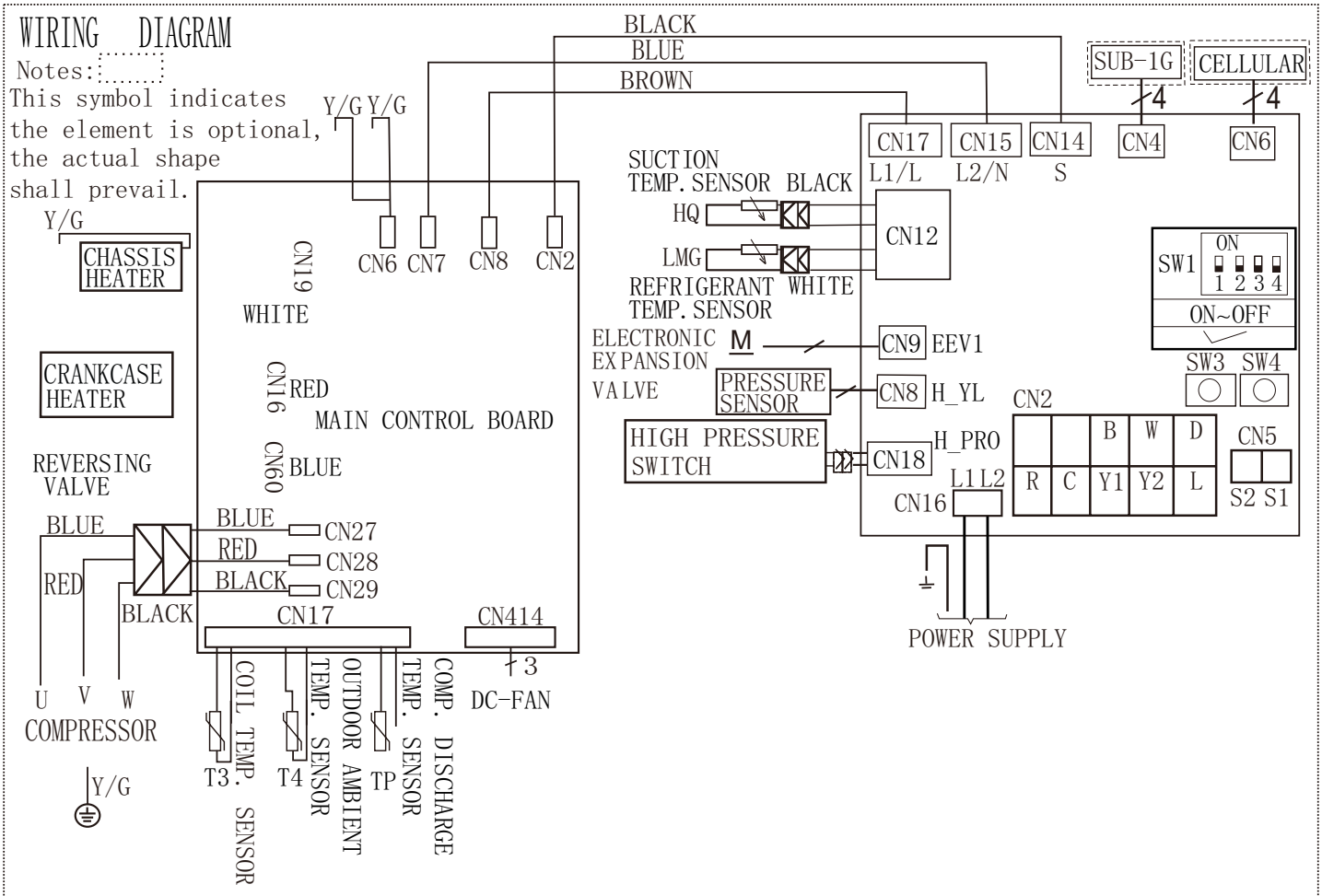


| MAIN CONTROL BOARD | | 24V BOARD | |
|---|---|---|---|
| CN2/CN7/CN8 | INPUT 230V AC | CN16 | INPUT 230V AC |
| CN16 | OUTPUT 230V AC | CN18/CN12/CN5 | OUTPUT 0~5V DC |
| CN60 | OUTPUT 230V AC | CN4/CN6/CN8 | OUTPUT 0~5V DC |
| CN19 | OUTPUT 230V AC | CN9 | OUTPUT 0~12V DC |
| CN17 | OUTPUT 0~5V DC | CN14/CN15/ CN17 | OUTPUT 230VAC |
| CN414 | OUTPUT 0~310V AC | | |
| CN27/CN28/CN29 | OUTPUT 0~310V AC | CN2 | INPUT 0~24VAC |

| SW1 | OFF | ON |
|---|---|---|
| 1 | NONE | NONE |
| 2 | N/A | N/A |
| 3 | NONE | STRONGER CAPACITY OUTPUT (ONLY 24V COMMUNICATION) |
| 4 | DEFAULT SETTING | ENHANCED DEFROSTING |

**Fig. 3 — Sizes 18K and 24K**

**NOTE: The 24v terminals at CN2 are prohibited from use as a standard method of communication due to compliance issues. They can be used for the purposes of emergency operation, service procedures, and troubleshooting only. Consult the Installation Manual wiring diagrams for approved wiring methods for proper operation, regulatory compliance, and ability to meet published performance ratings.**

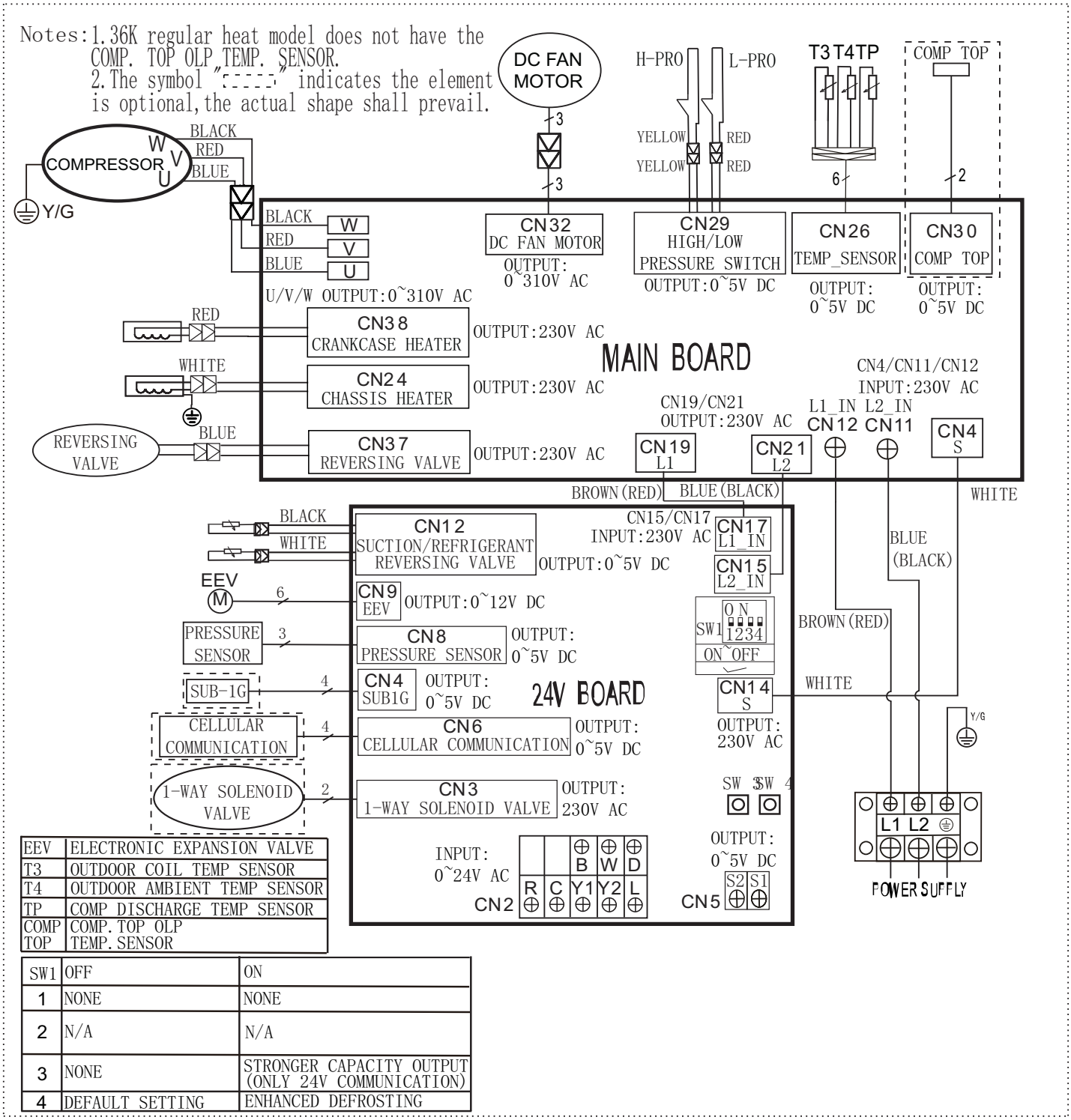


**Fig. 4 — Size 30K**

**NOTE:** The 24v terminals at CN2 are prohibited from use as a standard method of communication due to compliance issues. They can be used for the purposes of emergency operation, service procedures, and troubleshooting only. Consult the Installation Manual wiring diagrams for approved wiring methods for proper operation, regulatory compliance, and ability to meet published performance ratings.

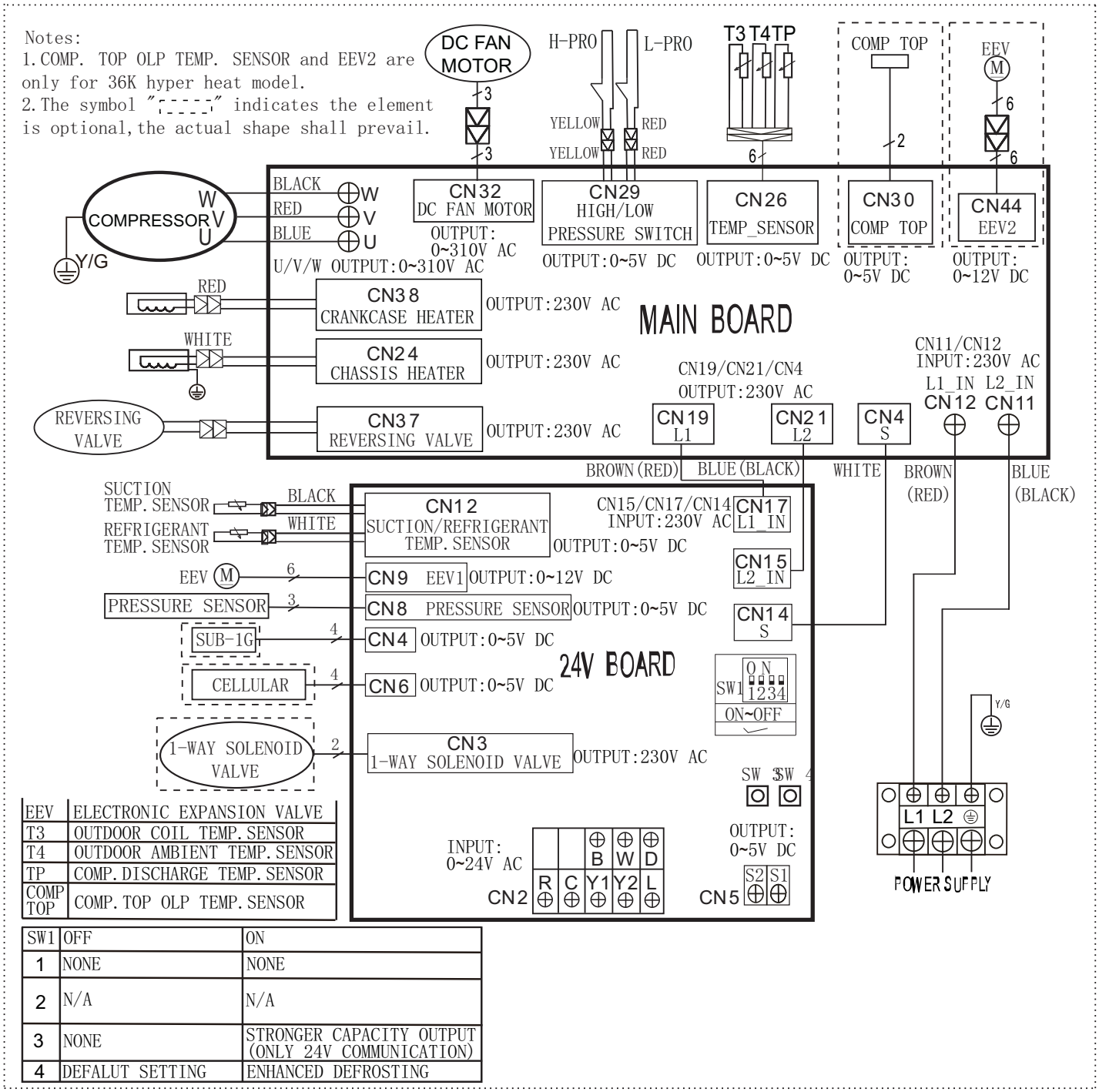


| | |
|---|---|
| EEV | ELECTRONIC EXPANSION VALVE |
| T3 | OUTDOOR COIL TEMP. SENSOR |
| T4 | OUTDOOR AMBIENT TEMP. SENSOR |
| TP | COMP. DISCHARGE TEMP. SENSOR |
| COMP TOP | COMP. TOP OLP TEMP. SENSOR |

| SW1 | OFF | ON |
|---|---|---|
| 1 | NONE | NONE |
| 2 | N/A | N/A |
| 3 | NONE | STRONGER CAPACITY OUTPUT (ONLY 24V COMMUNICATION) |
| 4 | DEFALUT SETTING | ENHANCED DEFROSTING |

**Fig. 5 — Sizes 36K and 48K**

**NOTE:** The 24v terminals at CN2 are prohibited from use as a standard method of communication due to compliance issues. They can be used for the purposes of emergency operation, service procedures, and troubleshooting only. Consult the Installation Manual wiring diagrams for approved wiring methods for proper operation, regulatory compliance, and ability to meet published performance ratings.

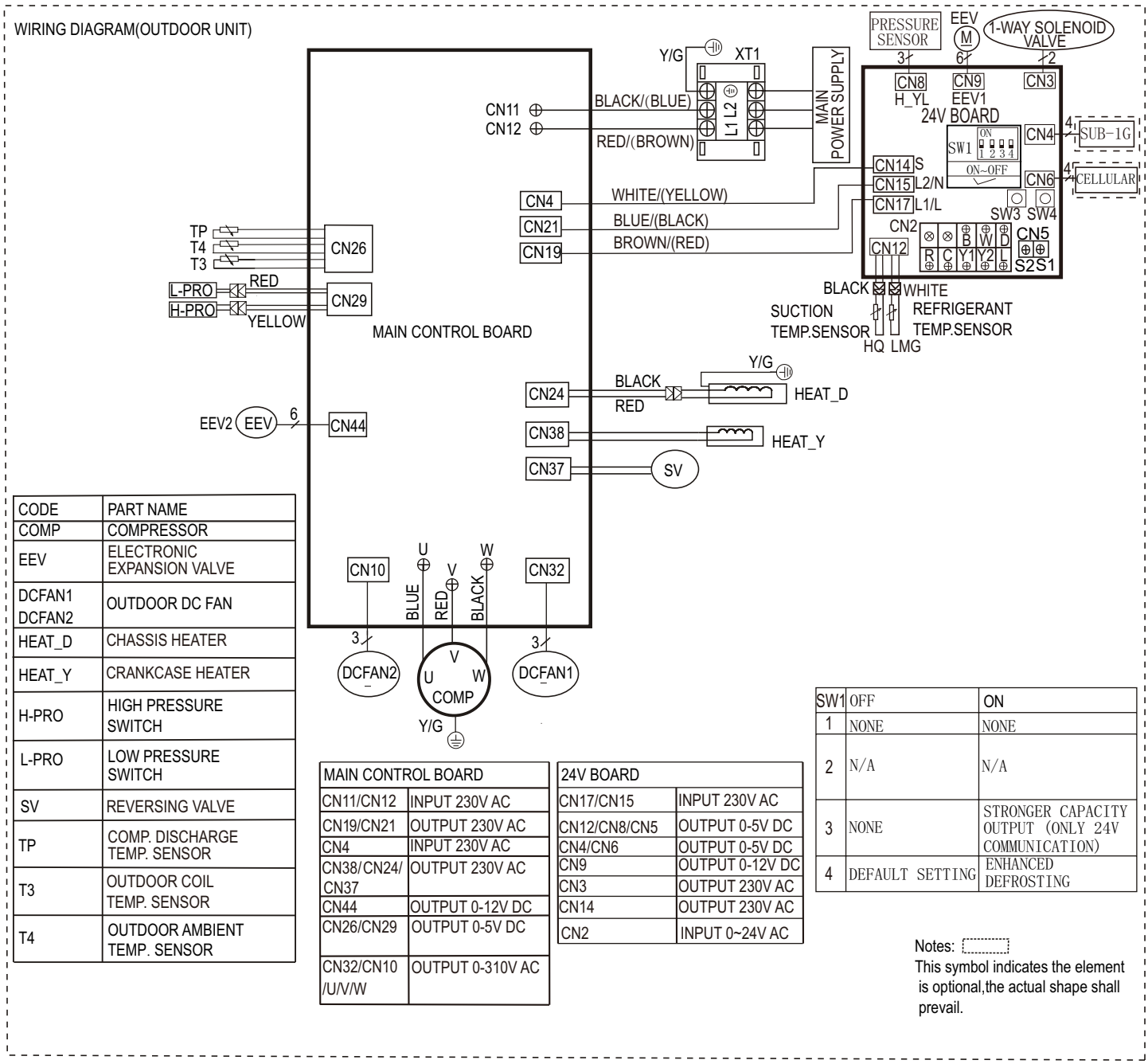


| CODE | PART NAME |
|---|---|
| COMP | COMPRESSOR |
| EEV | ELECTRONIC EXPANSION VALVE |
| DCFAN1 DCFAN2 | OUTDOOR DC FAN |
| HEAT_D | CHASSIS HEATER |
| HEAT_Y | CRANKCASE HEATER |
| H-PRO | HIGH PRESSURE SWITCH |
| L-PRO | LOW PRESSURE SWITCH |
| SV | REVERSING VALVE |
| TP | COMP. DISCHARGE TEMP. SENSOR |
| T3 | OUTDOOR COIL TEMP. SENSOR |
| T4 | OUTDOOR AMBIENT TEMP. SENSOR |

| MAIN CONTROL BOARD | |
|---|---|
| CN11/CN12 | INPUT 230V AC |
| CN19/CN21 | OUTPUT 230V AC |
| CN4 | INPUT 230V AC |
| CN38/CN24/ CN37 | OUTPUT 230V AC |
| CN44 | OUTPUT 0-12V DC |
| CN26/CN29 | OUTPUT 0-5V DC |
| CN32/CN10 /U/V/W | OUTPUT 0-310V AC |

| 24V BOARD | |
|---|---|
| CN17/CN15 | INPUT 230V AC |
| CN12/CN8/CN5 | OUTPUT 0-5V DC |
| CN4/CN6 | OUTPUT 0-5V DC |
| CN9 | OUTPUT 0-12V DC |
| CN3 | OUTPUT 230V AC |
| CN14 | OUTPUT 230V AC |
| CN2 | INPUT 0~24V AC |

| SW1 | OFF | ON |
|---|---|---|
| 1 | NONE | NONE |
| 2 | N/A | N/A |
| 3 | NONE | STRONGER CAPACITY OUTPUT (ONLY 24V COMMUNICATION) |
| 4 | DEFAULT SETTING | ENHANCED DEFROSTING |

**Fig. 6 — Size 60K**

**NOTE:** The 24v terminals at CN2 are prohibited from use as a standard method of communication due to compliance issues. They can be used for the purposes of emergency operation, service procedures, and troubleshooting only. Consult the Installation Manual wiring diagrams for approved wiring methods for proper operation, regulatory compliance, and ability to meet published performance ratings.

# REFRIGERANT CYCLE DIAGRAM

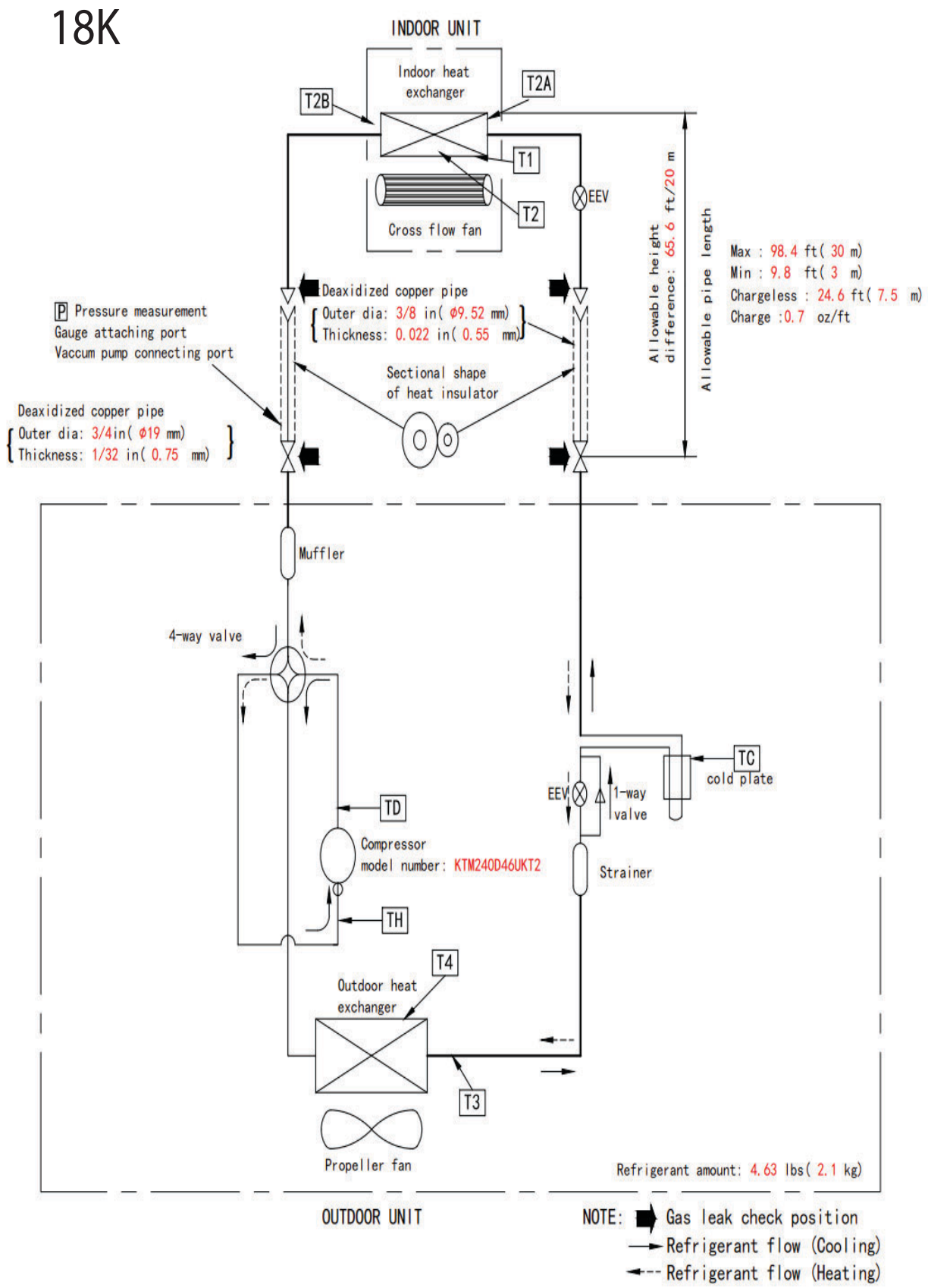


**Fig. 7 —Refrigerant Cycle 18K**

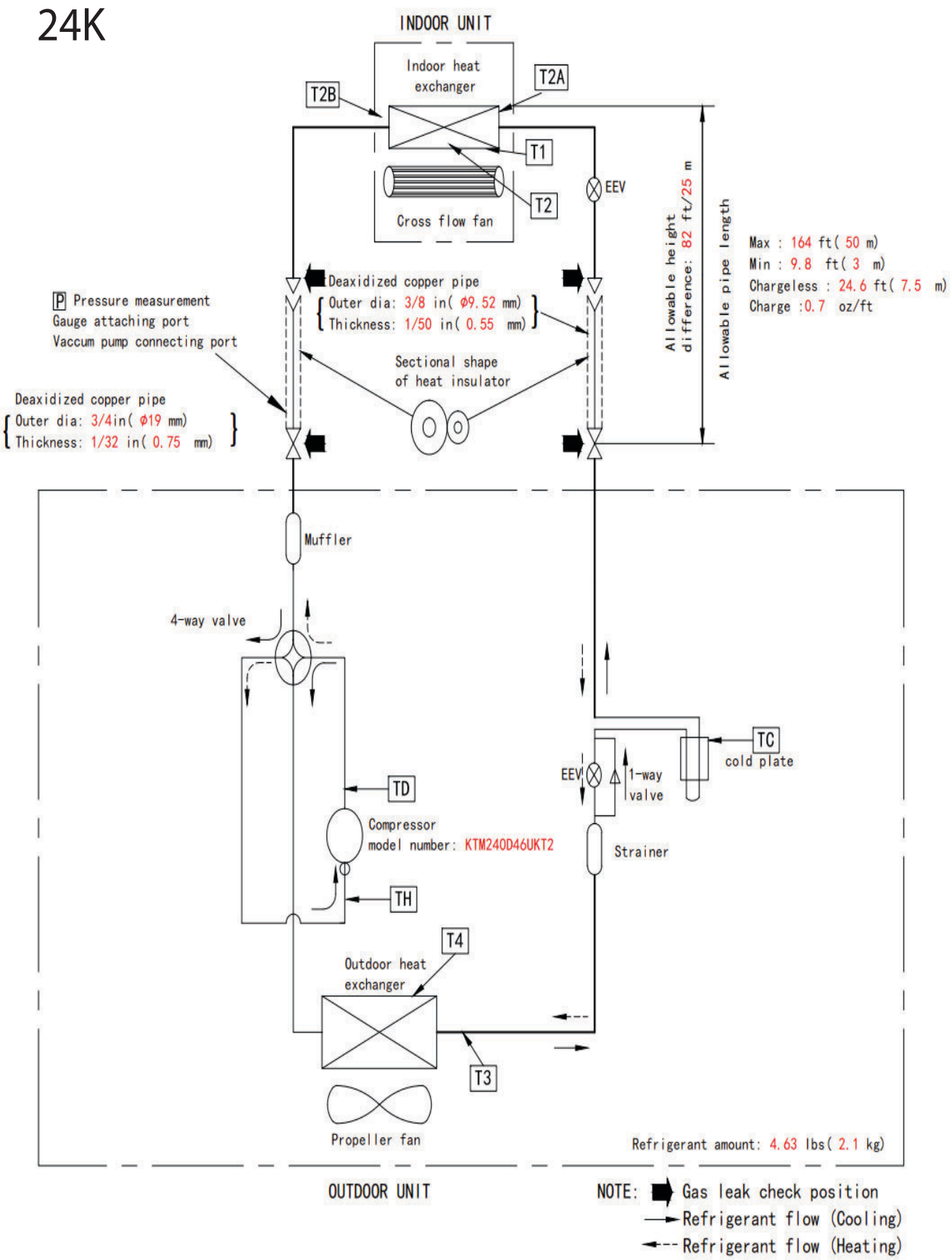


**Fig. 8 —Refrigerant Cycle 24K**

30K

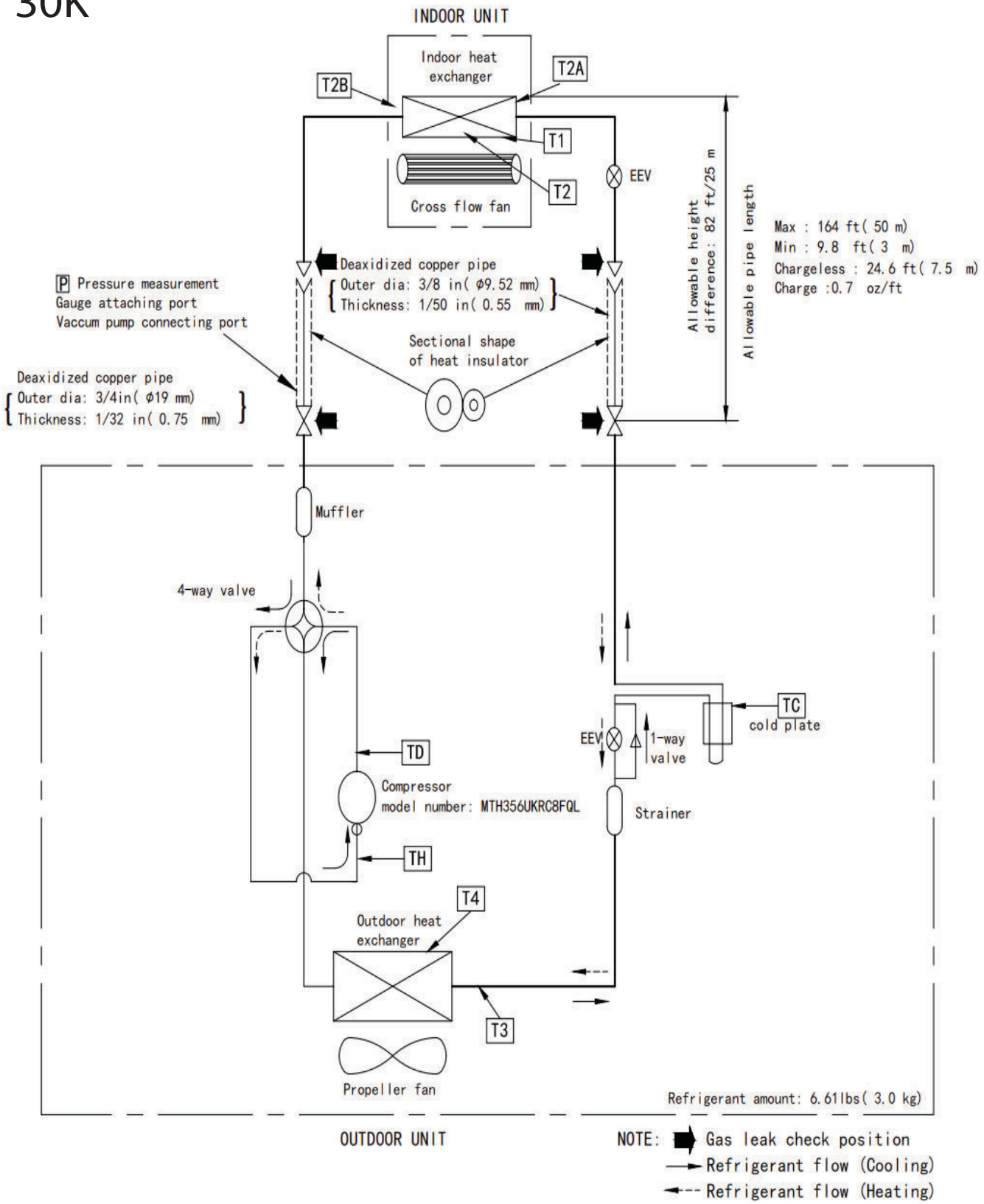


**Fig. 9 —Refrigerant Cycle 30K**

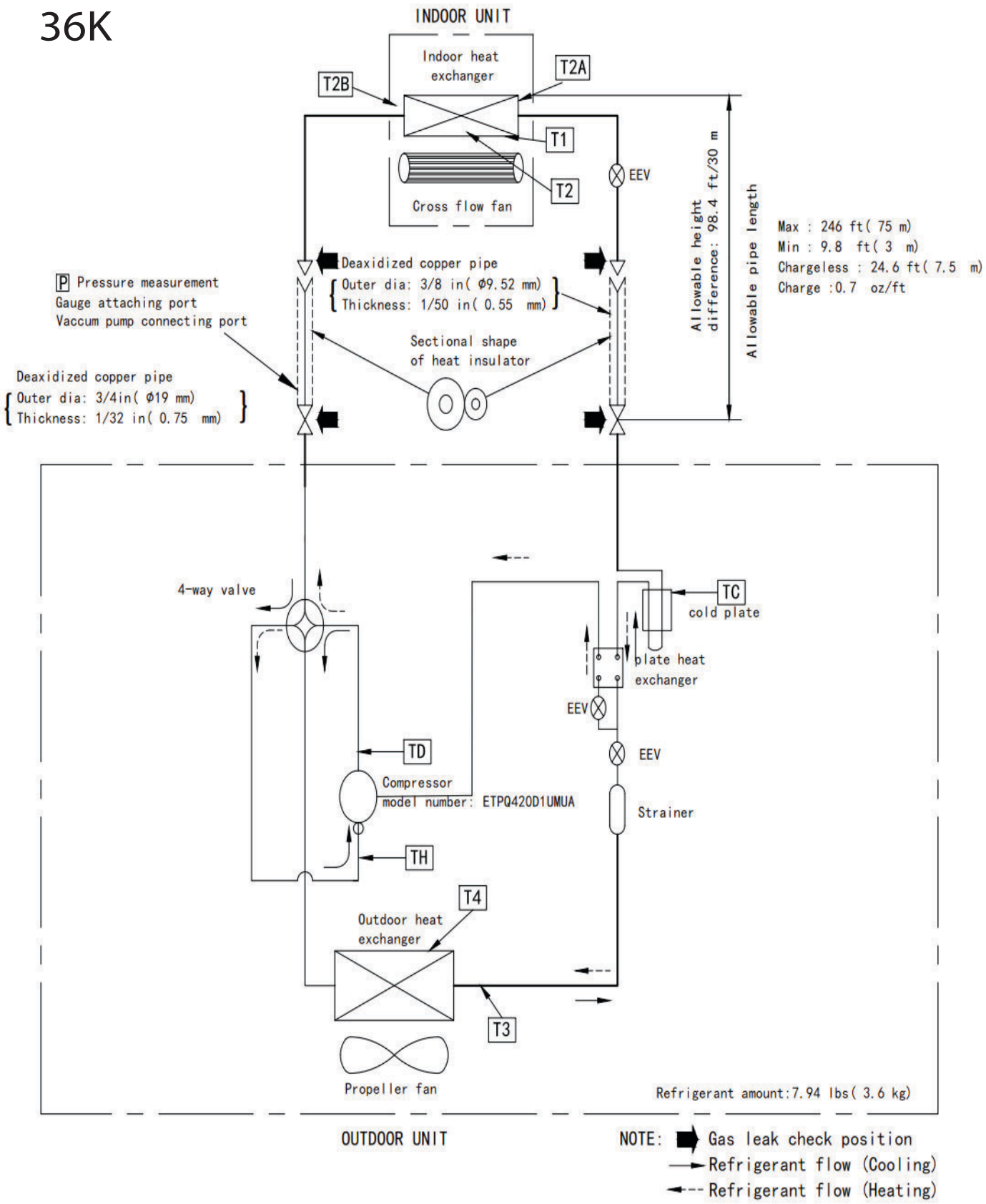


**Fig. 10 —Refrigerant Cycle 36K**

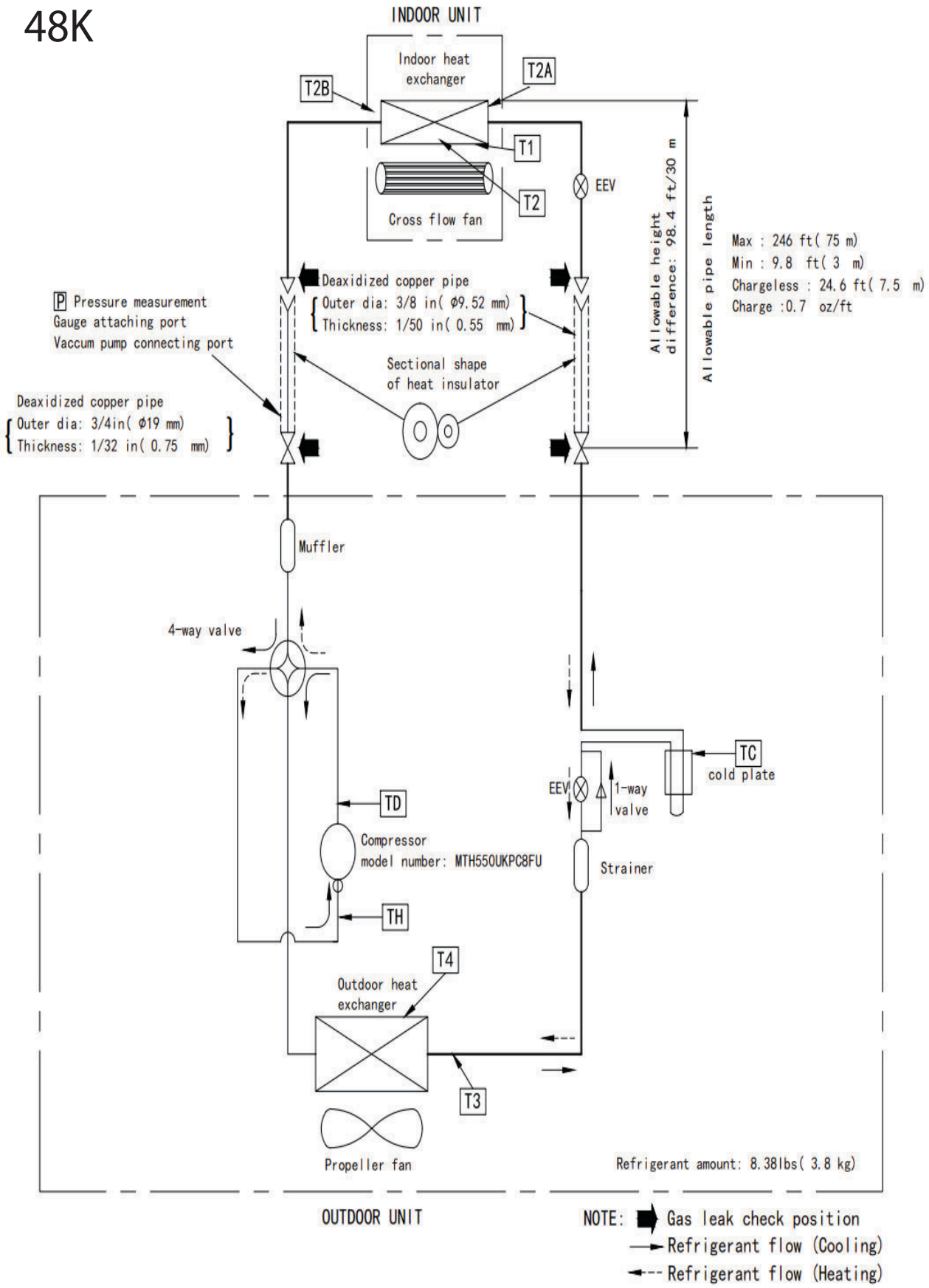


**Fig. 11 — Refrigerant Cycle 48K**

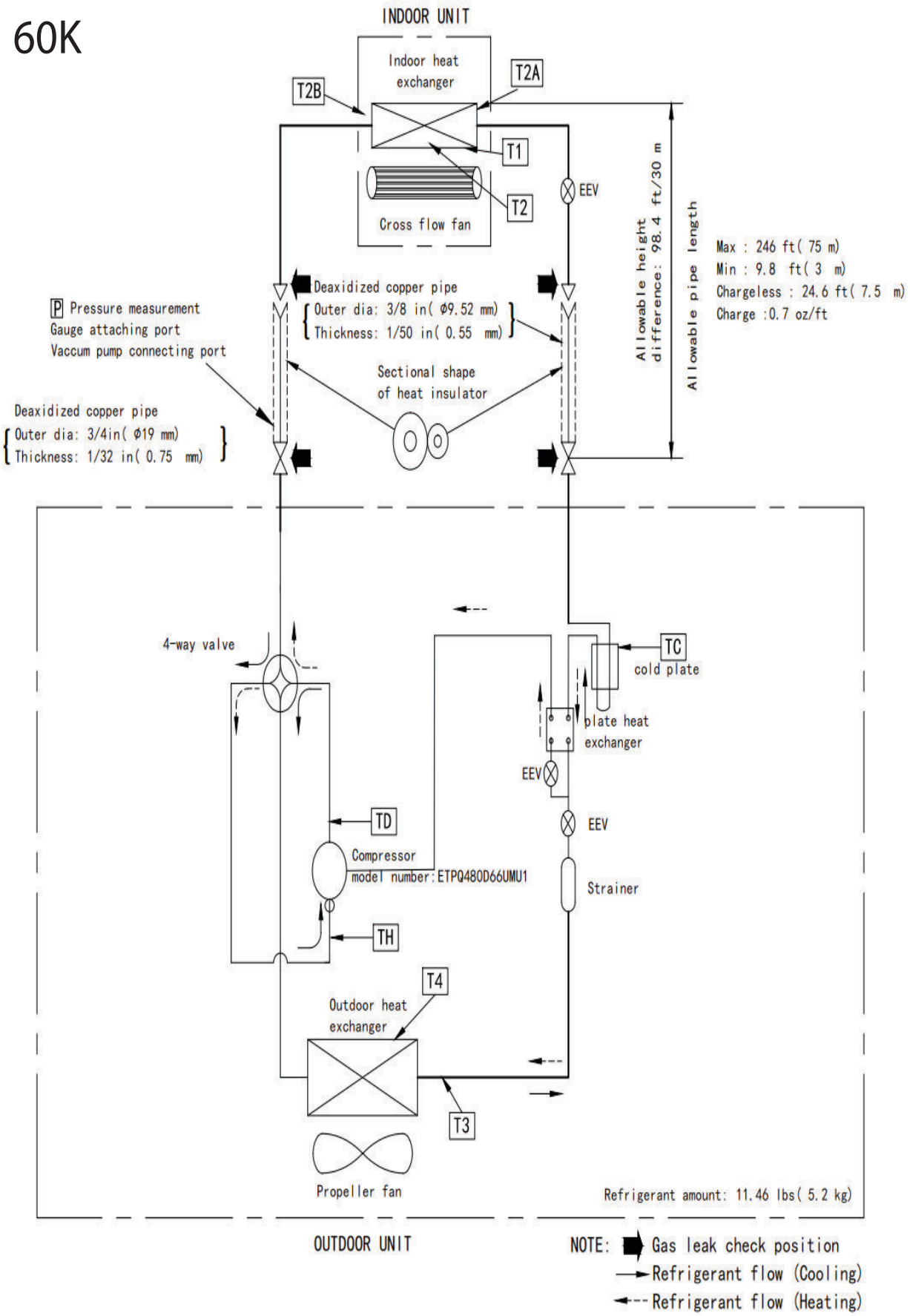


**Fig. 12 —Refrigerant Cycle 60K**

# REFRIGERANT LINES

## General Refrigerant Line Sizing

1. The outdoor units are shipped with a full charge of R-454B refrigerant. All charges, line sizing, and capacities are based on runs of 25ft. (7.6 m). For runs over 25 ft. (7.6 m), consult Table 2, below, for the proper charge adjustments.
2. The minimum refrigerant line length between the indoor and outdoor units is 10 ft. (3 m).
3. Refrigerant lines should not be buried in the ground. If it is necessary to bury the lines, not more than 36 in (914 mm) should be buried. Provide a minimum 6in (152 mm) vertical rise to the service valves to prevent refrigerant migration.
4. Suction line must be insulated. Use a minimum of 1/2in. (12.7 mm) thick insulation. Closed-cell insulation is recommended in all long-line applications.
5. Special consideration should be given to isolating interconnecting tubing from the building structure. Isolate the tubing so vibration or noise is not transmitted into the structure.

**NOTE:** Table 2 displays the following maximum lengths allowed.

**Table 2 – Refrigerant Piping**

| | | D5CUHAH18AAK | D5CUHAH24AAK | D5CUHAH30AAK | D5CUHAH36AAK | D5CUHAH48AAK | D5CUHAH60AAK |
|---|---|---|---|---|---|---|---|
| Refrigerant Type | Type | R454B | R454B | R454B | R454B | R454B | R454B |
| Charge Amount | lb. (kg) | 4.63(2.1) | 4.63(2.1) | 6.61(3.0) | 7.94(3.6) | 8.38(3.8) | 11.46(5.2) |
| Additional refrigerant charge | Oz/ft (g/m) | 0.7(65) | 0.7(65) | 0.7(65) | 0.7(65) | 0.7(65) | 0.7(65) |
| Liquid Pipe (size - connection type) | In (mm) | 3/8in (9.52mm) | 3/8in (9.52mm) | 3/8in (9.52mm) | 3/8in (9.52mm) | 3/8in (9.52mm) | 3/8in (9.52mm) |
| Suction Pipe (size - connection type) | In (mm) | 3/4in (19mm) | 3/4in (19mm) | 3/4in (19mm) | 3/4in (19mm) | 3/4in (19mm) | 3/4in (19mm) |
| Min. Piping Length | ft. (m) | 10(3) | 10(3) | 10(3) | 10(3) | 10(3) | 10(3) |
| Standard Piping Length | ft. (m) | 24.6 (7.5) | 24.6 (7.5) | 24.6 (7.5) | 24.6 (7.5) | 24.6 (7.5) | 24.6 (7.5) |
| Max. Piping Length with no additional refrigerant charge per System | ft. (m) | 24.6 (7.5) | 24.6 (7.5) | 24.6 (7.5) | 24.6 (7.5) | 24.6 (7.5) | 24.6 (7.5) |
| Total Maximum Piping Length per system | ft. (m) | 98.42(30) | 164.04(50) | 164.04(50) | 246(75) | 246(75) | 246(75) |
| Max. outdoor-indoor height difference (OU higher than IU) | ft. (m) | 65.62(20) | 82.02(25) | 82.02(25) | 98.43(30) | 98.43(30) | 98.43(30) |
| Max. outdoor-indoor height difference (IU higher than OU) | ft. (m) | 65.62(20) | 82.02(25) | 82.02(25) | 98.43(30) | 98.43(30) | 98.43(30) |

1.The charge amount listed in Table 2 is for piping runs up to 25 ft. (7.6 m).

# SYSTEM EVACUATION AND CHARGING

## CAUTION

**UNIT DAMAGE HAZARD**

Failure to follow this caution may result in equipment damage or improper operation.

Never use the system compressor as a vacuum pump.

Refrigerant tubes and the indoor coil should be evacuated using the recommended 500 micron deep vacuum method. The alternate triple evacuation method may be used if the procedure outlined below is followed.

**NOTE: Always break a vacuum with dry nitrogen.**

## USING VACUUM PUMP

1. Completely tighten flare nuts A, B, C, D. Connect the manifold gage charge hose to a charge port of the low side service valve (see Fig. 24).
2. Connect the charge hose to vacuum pump.
3. Fully open the low side of manifold gage (see Fig. 13).
4. Start the vacuum pump.
5. Evacuate using either the deep vacuum or triple evacuation method.
6. After evacuation is complete, fully close the low side of manifold gage and stop the vacuum pump operation.
7. The factory charge contained in the outdoor unit is good for up to 25 ft. (8 m) of line length. For refrigerant lines longer than 25 ft. (8 m), add refrigerant, up to the allowable length.
8. Disconnect the charge hose from the charge connection of the low side service valve.
9. Fully open service valves B and A.
10. Securely tighten the service valve caps.

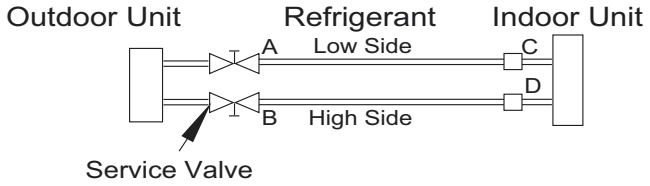


**Fig. 13 —Service Valve**

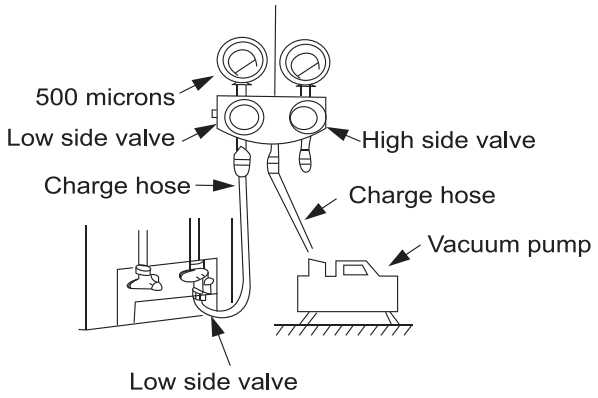


**Fig. 14 —Manifold**

## EVACUATION

Evacuation of the system will remove air or nitrogen (non-condensables) as well as moisture. A proper vacuum will assure a tight, dry system before charging with refrigerant. The two methods used to evacuate a system are the deep vacuum method and the triple vacuum method.

## DEEP VACUUM METHOD

The deep vacuum method requires a vacuum pump capable of pulling a vacuum of 500 micron and a vacuum gauge capable of accurately measuring this vacuum depth. This method is the most positive way of assuring a system is free of air and moisture (see Figure 15).

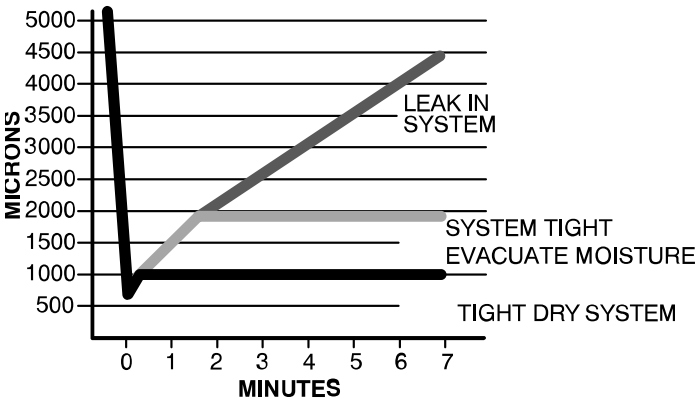


**Fig. 15 —Deep Vacuum Graph**

## TRIPLE EVACUATION METHOD

The triple evacuation method should be used when vacuum pump is not capable of pumping down to 500 microns and system does not contain any liquid water. Refer to Fig. 16 and proceed as follows:

1. Attach refrigeration gauges and evacuate system down to 28 inches of mercury and allow pump to continue operating for an additional 15 minutes.
2. Close service valves and shut off vacuum pump.
3. Connect a nitrogen cylinder and regulator to system and flow nitrogen until system pressure is 2 psig.
4. Close service valve and allow system to stand for 1 hour. During this time, dry nitrogen will be able to diffuse throughout the system absorbing moisture.
5. Repeat this procedure as indicated in Fig. 16. System is now free of any contaminants and water vapor.

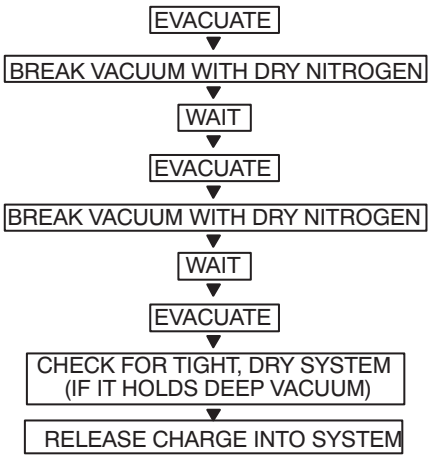


**Fig. 16 —Triple Evacuation Method**

## FINAL TUBING CHECK

Check to be certain factory tubing on both the indoor and outdoor unit has not shifted during shipment. Ensure tubes are not rubbing against each other or any sheet metal. Pay close attention to the feeder tubes, making sure wire ties on feeder tubes are secure and tight.

# ELECTRONIC FUNCTIONS

## Abbreviations

**Table 3 – Unit element abbreviations**

| Abbreviation | Element |
|---|---|
| T1 | Indoor room temperature |
| T2 | Coil temperature of evaporator |
| T3 | Coil temperature of condenser |
| T4 | Outdoor ambient temperature |
| TP | Compressor discharge temperature |
| Tsc | Adjusted setting temperature |
| CDIFTEMP | Cooling shutdown temperature |
| HDIFTEMP2 | Heating shutdown temperature |
| TCDE1 | Exit defrost temperature1 |
| TCDE2 | Exit defrost temperature2 (maintain for a period of time) |
| TIMING_DEFROST_ TIME_ADD | Enter defrost time |
| EE_TIME_DEFROST7_ST RONG | Enter enhanced defrost time |
| TCDE1_ADD_ STRONG | Exit enhanced defrost temperature1 |
| TCDE2_ADD_ STRONG | Exit enhanced defrost temperature2 (maintain for a period of time) |

**NOTE:** In this manual, terms such as CDIFTEMP, HDIFTEMP2, TCDE1, TCDE2, TIMING_DEFROST_TIME_ADD...etc., are EEPROM parameter settings.

## FAN Mode

When fan mode is activated:

- Outdoor fan and compressor are stopped

## COOLING Mode

### Compressor Control

Reach the configured temperature:

***When the compressor runs continuously for less than 120 minutes.***

- If the following conditions are satisfied, the compressor ceases operation.
- Calculated frequency (fb) is less than minimum limit frequency (FminC).
- Compressor runs at FminC more than ten minutes.
- Indoor room temperature(T1) is lower than or equal to (Tsc-CDIFTEMP 0.9°F/-0.5°C)

***When the compressor runs continuously for more than 120 minutes.***

If the following conditions are satisfied, the compressor ceases operation.

- Calculated frequency (fb) is less than minimum limit frequency (FminC).
- Compressor runs at FminC more than 10 minutes.
- When indoor room temperature (T1) is lower than or equal to (Tsc-CDIFTEMP).

**NOTE:** CDIFTEMP is EEPROM setting parameter. It is 4°F (2°C) usually.

***If one of the following conditions is satisfied, not judge protective time.***

- Compressor running frequency is more than test frequency.
- When compressor running frequency is equal to test frequency, outdoor ambient temperature (T4) is more than 59°F (15°C) or outdoor ambient sensor (T4) fault.
- Change setting temperature.
- Turning on/off turbo or sleep function
- Various frequency limit shutdown occurs.

### Outdoor Fan Control

- The outdoor unit will be run at different fan speed according to outdoor ambient temperature(T4) and compressor frequency.
- For different outdoor units, the fan speeds are different.

### Condenser Temperature Protection

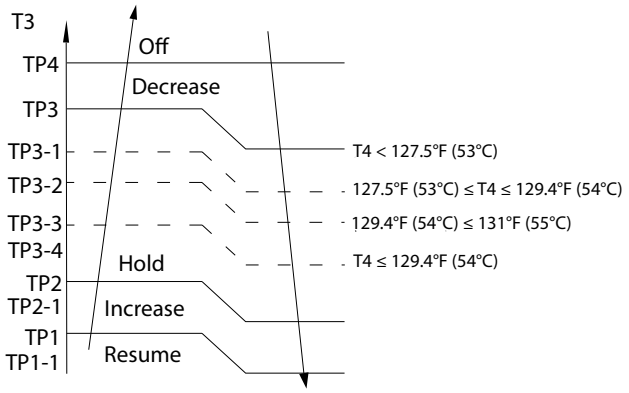


When the condenser temperature exceeds a configured value, the compressor ceases operation.

## Heating Mode (Heat Pump Modes)

### Compressor Control

***Reach the configured temperature***

- If the following conditions are satisfied, the compressor ceases operation.
- Calculated frequency (fb) is less than minimum limit frequency (FminH).
- Compressor runs at FminH more than 10 minutes.
- T1 is higher than or equal to Tsc+ HDIFTEMP2.

**NOTE:** HDIFTEMP2 is the EEPROM parameter setting. It is normally 4°F (2°C).

- If one of the following conditions is satisfied, not judge protective time.
- Compressor running frequency is more than test frequency.
- Compressor running frequency is equal to test frequency, outdoor ambient temperature (T4) is more than 59°F (15°C) or Outdoor ambient sensor (T4) fault.
- Change setting temperature.
- Turning on/off turbo or sleep function

***When the current is higher than the predefined safe value, surge protection is activated, causing the compressor to cease operations.***

## Outdoor Fan Control

- The outdoor unit will be run at different fan speed according to outdoor ambient temperature (T4) and compressor frequency.
- For different outdoor units, the fan speeds are different.

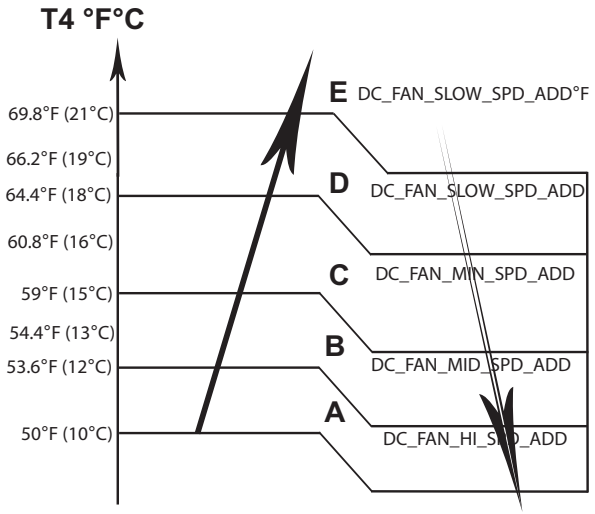


**Fig. 17 —Outdoor Fan Running Rules**

***Indoor Fan Running Rules:***

- In the COOLING mode, the indoor fan runs continuously and the user can select any of the following speeds: HIGH, MEDIUM, LOW and AUTO.
- When the setting temperature is reached, if the compressor stops operating, the indoor fan motor runs in the minimum or setting speed (see Fig. 18).

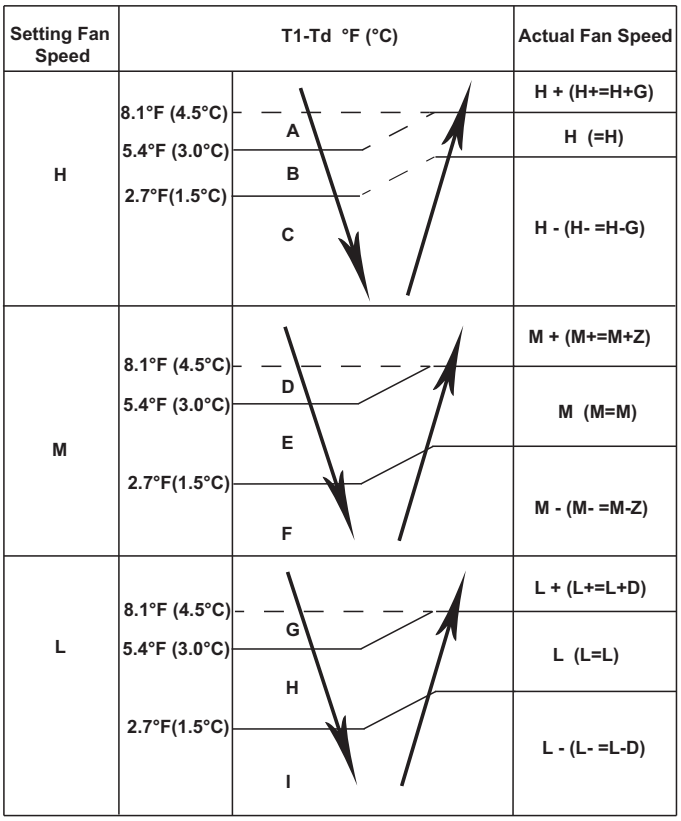


**Fig. 18 —Indoor Fan Running Rules**

The AUTO fan adheres to the following rules (see Fig. 19:)

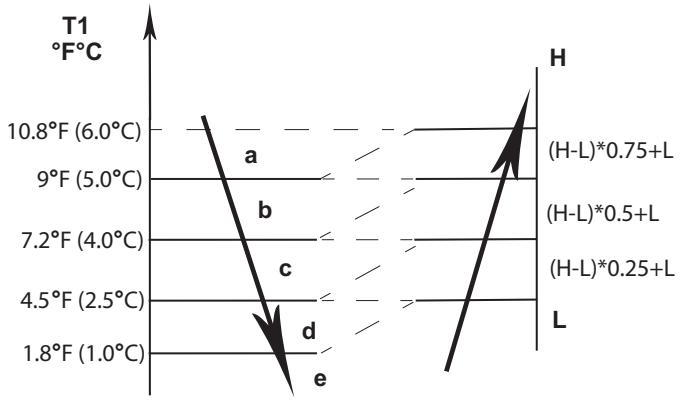


**Fig. 19 —AUTO FAN Running Rules**

***Compressor Temperature Protection***

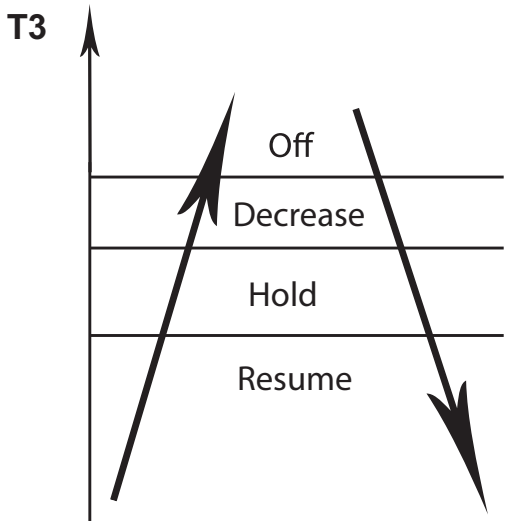


**Fig. 20 —Compressor Temperature Protection**

- Off: Compressor stops
- Decrease: Decrease the running frequency to the lower level
- Hold: Keep the current frequency
- Resume: No limitation for frequency

When the condenser temperature is higher than the setting value, the compressor stops.

***Evaporator Temperature Protection***

When the evaporator temperature is lower than the setting value the compressor stops.

## HEATING Mode

***Compressor Running Rules:***

- When T1-Ts>-$f'$T, the compressor stops.
- When T1-Ts<$f'$T-1.5, the compressor is on. $f'$T is the programmed parameter for temperature compensation.
- When the AC runs in the MUTE mode, the compressor runs with a low frequency.
- When the current is more than the setting value, the current protection function activates and the compressor stops.

***Outdoor Fan Running Rules:***

The outdoor unit runs at a different fan speed according to T4. For different outdoor units, the fan speeds differ.

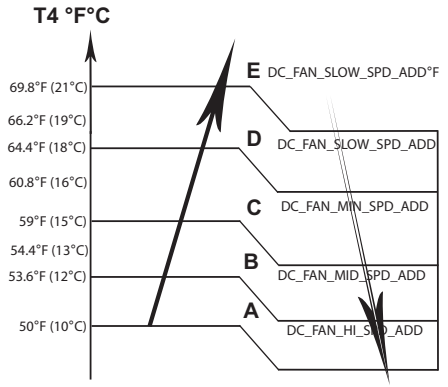


**Fig. 21 —Outdoor Fan Running Rules**

## Defrosting mode

The unit enters defrosting mode according to the temperature value of condenser temperature (T3) and outdoor ambient temperature (T4) as well as the compressor running time.

- In defrosting mode, the compressor continues to run, the indoor and outdoor motor will cease operation, the defrost light of the indoor unit will turn on, and the "dF " symbol is displayed.
- If any one of the following conditions is satisfied, defrosting ends and the machine switches to normal heating mode:
- Condenser temperature (T3) rises above TCDE1.
- Condenser temperature (T3) maintained above TCDE2 for 80 seconds.
- Unit runs for 15 minutes consecutively in defrosting mode.
- If Outdoor ambient temperature (T4) is lower than or equal to -7.6°F (-22°C) and compressor running time is more than TIMING_DEFROST_TIME, if any one of the following conditions is satisfied, defrosting ends and the machine switches to normal heating mode:
- Unit runs for 10 minutes consecutively in defrosting mode.
- Condenser temperature (T3) rises above 50°F/ 10°C.
- If any one of the following conditions is satisfied, the unit enters defrosting mode
- If condenser temperature (T3) or outdoor ambient temperature (T4) is lower than -3°C for 30 seconds, Ts-T1 is lower than 5°C and compressor running time is more than EE_TIME_DEFROST7_ ADD.
- If condenser temperature (T3) or outdoor ambient temperature(T4) is lower than -3°C for 30 seconds and compressor running time is more than EE_ TIME_DEFROST7_ADD+30 minutes.
- If any one of the following conditions is satisfied, defrosting ends and the machine switches to normal heating mode:
  - Condenser temperature(T3) rises above TCDE1 7.2°F/+4°C.
  - Condenser temperature(T3) maintained above TCDE2 7.2°F/+4°C for 80 seconds.
  - Unit runs for 15 minutes consecutively in defrosting mode.

***Enhanced Defrost***

Enhanced Defrost is a feature that is enabled by turning on dipswitch SW4 on the 24 volt ODU board. This feature is designed to be used for problem areas of defrosting (near water sources and areas of high humidity during cold outdoor conditions). When enabled, the total heating cumulative run time will be reduced to 40 minutes, allowing for defrosting to occur at the 40th minute providing the T3 or T4 temperature is 26F or cooler at that time. The defrost termination temperature at T3 will also increase to 77F to ensure better completion of defrost prior to terminating defrost.

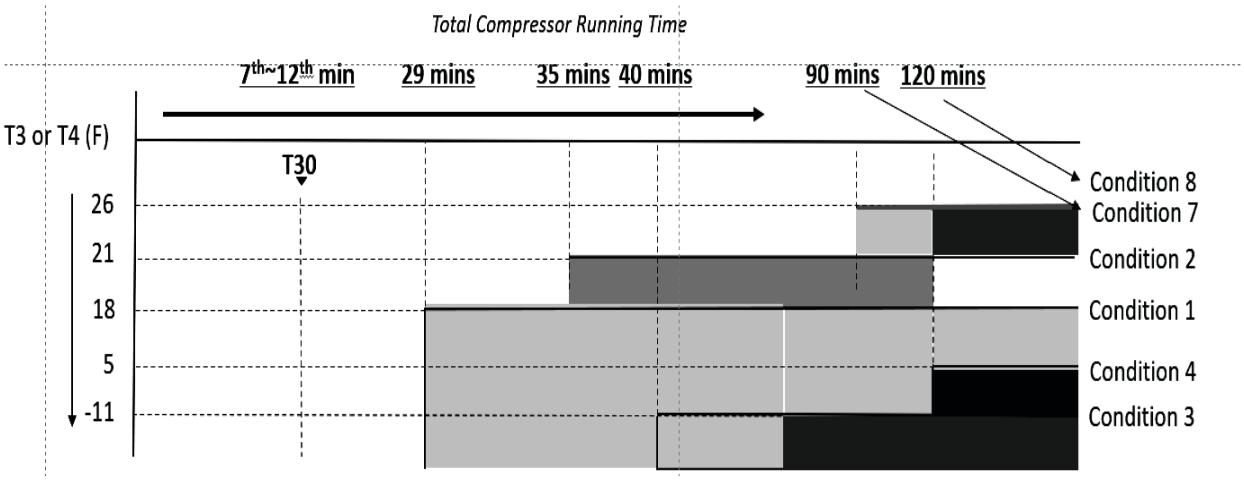


| | | |
|---|---|---|
| Condition 1 | Total compressor running time is 29 mins | T3 ≤ 18F, and T3 is ≤ T30 - 4.5F (2.5C), and T4＞-8F |
| Condition 2 | Total compressor running time is 35 mins | T3 ≤ 21F, and T3 is ≤T30 -5.4F (3C), and T4＞-8F |
| Condition 3 | Total compressor running time is 29 mins | T3 ≤ -11F and last for 3 mins, and T4＞-8F |
| Condition 4 | Total compressor running time is 120 mins | T3 ≤ 5F and T4＞-8F |
| Condition 5 | Cumulative running 30 mins | T4-T3 > (0.5T4 + 5F) and T3 ≤ 10F, T4＞-8F |
| Condition 6 | Cumulative running 8 hours | T4≤ -8F, with T4 operating without malfunction |
| Condition 7 | Cumulative running time 90 mins and diff. of Ts-T1 ≤ 9F<br>Cumulative running time 120 minutes (if Ts-T1 diff. above not applicable) | T3 or T4 ≤ 26F last for 30 seconds |
| *Condition 8 | If enhanced defrost is ON, cumulative running time is 40 minutes (T30 does not apply) *Only applies to Crossover ODU's. Enable enhanced defrost by turning on dipswitch 4 in the ODU. | T3 or T4 ≤ 26F last for 30 seconds |

## Evaporator Coil Temperature Protection

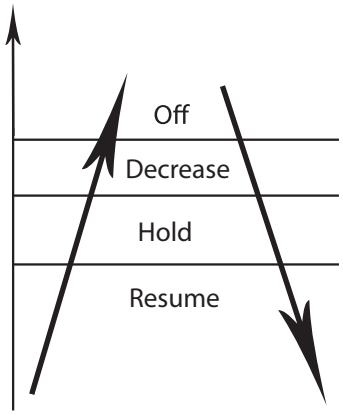


**Fig. 22 —Evaporator Coil Temperature Protection**

When the evaporator temperature is higher than the setting protection value, the compressor stops.

## AUTO Mode

AUTO mode can be selected with the remote controller and the setting temperature can be changed between 60.0°F~86°F (16°C~30°C).

In the AUTO mode, the unit chooses either the COOLING, HEATING or the FAN-ONLY mode accT2, T4 and relative humidity.

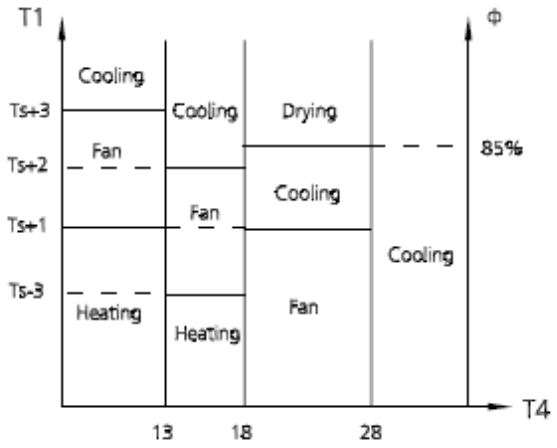


**Fig. 23 —AUTO Mode**

**Heating*:** COOLING ONLY models run at fan speed. The indoor fan runs in the AUTO fan speed for the relevant mode. The louver operates the same as in the relevant mode.

If the unit switches mode between HEATING and COOLING, the compressor repeatedly stops for a certain time and then chooses the mode according to T1-Ts. If the setting temperature is modified, the unit selects a running function again.

## DRYING mode

The indoor fan speed is fixed at BREEZE and can not be changed. The louver angle is the same as in the COOLING mode.

Low Indoor Room Temperature Protection In the DRYING mode, if the room temperature is lower than 50°F(10°C),

the compressor stops and does not resume until the room temperature exceeds 53.6°F (12°C).

Evaporator anti-freezing protection, condenser high temperature protection and outdoor unit frequency limit are active and are the same as that in the COOLING mode. The outdoor fan operates the same as in COOLING mode.

## FORCED OPERATION Function

**Enter FORCED OPERATION function:**

When the machine is off, press TOUCH to engage the Forced Auto Mode. Press TOUCH again, within 5 seconds, to engage the FORCED COOLING mode. In FORCED AUTO, FORCED COOLING or any other operation mode, press TOUCH to turn off the unit.

In the FORCED OPERATION mode, all general protections and the remote controller are available.

## Operation Rules

**FORCED COOLING mode**

The compressor runs at the F2 frequency and the indoor fan runs as a breeze. After running for 30 minutes, the unit enters the AUTO mode at a 75.2°F (24°C) setting temperature.

**FORCED AUTO mode**

The FORCED AUTO mode is the same as the normal AUTO mode with a 75.2°F (24°C) setting temperature.

**AUTO-RESTART function**

The indoor unit is equipped with an AUTO-RESTART function, which is carried out through an auto-restart module. In case of a sudden power failure, the module memorizes the setting conditions before the power failure. The unit resumes the previous operation setting (not including the swing function) automatically 3 minutes after the power returns.

If the memorization condition is the FORCED COOLING mode, the unit runs in the COOLING mode for 30 minutes and enters the AUTO mode as 75.2°F (24°C) setting temp.

If the air conditioner turns off before the unit powers off and the air conditioner is required to restart immediately, the compressor delays for 1 minute when the power is on. Under other conditions, the compressor has a 3 minute delay when it restarts.

**Refrigerant Leakage Detection**

With this new technology, the display area displays EL0C when the outdoor

unit detects a refrigerant leak.

**46°F (8°C) Heating**

When the compressor is running, the indoor fan motor runs without the anti-cold air function. When the compressor is off, the indoor fan motor is off.

# OUTDOOR UNIT POINT CHECK FUNCTION

- A check switch is included on the adapter board.
- Push SW4 to check the unit's status while running. The digital display shows the following codes each time the SW4 is pushed.

| Number of Presses | Display | Remark |
|---|---|---|
| **00** | Normal display | Displays running frequency, running state, or malfunction code Defrosting mode: "dF" or alternative displays between running frequency and "dF" (each appears for 0.5s.) Forced cooling mode: the LED displays "FC" or alternative displays between running frequency and "FC" (each appears for 0.5s). |
| **01** | Indoor unit capacity demand code | Actual data*HP*10<br><br>If capacity demand code is higher than 99, light the decimal point of the high digit tube. (For example, the digital display tube show "5.0",so 5.0 multiplied by 10 to become 50, then added to 100 to become 150, so actual capacity demand=150/10=15. the digital display tube show "60",so actual capacity demand=60/10=6.0) GA algorithm models display "--" |
| **02** | The frequency after the capacity requirement adapter | If the value is higher than 99, light the decimal point of the high digit tube. |
| **03** | Room temperature (T1) | If the temp. is lower than 0°C, the digital display tube will show "0". If the temp. is higher than 70°C, the digital display tube will show "70". |
| **04** | Indoor unit evaporator temperature (T2) | If the temp. is lower than -9°C, the digital display tube will show "-9".If the temp. is higher than 70°C, the digital display tube will show "70". If the indoor unit is not connected, the digital display tube will show: "--" |
| **05** | Condenser pipe temp.(T3) | |
| **06** | Outdoor ambient temp.(T4) | |
| **07** | Compressor discharge temp. (TP) | The display value is between 0~199°C. If the temp. is lower than 0°C, the digital display tube will show "0".If the temp. is higher than 99°C, light the decimal point of the high digit tube. (For example, the digital display tube show "0.5",so 0.5 multiplied by 10 to become 5, then added to 100 to become 105°C.) |
| **08** | AD value of current | The display value is a hex number. For example, the digital display tube shows "Cd", so C*161+d*160=12*16+13=205, it means AD value is 205. |
| **09** | AD value of voltage | |
| **10** | Indoor unit running mode code | Standby:0,Cooling:1, Heating:2, Fan only 3, Drying:4, Forced cooling:6, Defrost:7; ECO:9; Forced defrosting :A; Self clean: B |
| **11** | Outdoor unit running mode code | |
| **12** | EXV open angle | Actual data/4.<br><br>If the value is higher than 99, light the decimal point of the high digit tube. For example, the digital display tube show "2.0",so 2.0 multiplied by 10 to become 20, then added to 100 to become 120,it means the EXV open angle is 120×4=480p.) |
| **13** | Frequency limit symbol | Bit 7: Frequency limit caused by IGBT radiator<br>Bit 6: Reserved<br>Bit 5: Reserved<br>Bit 4: Frequency limit caused by low temperature of T2.(LH00)<br>Bit 3: Frequency limit caused by T3.(LC01)<br>Bit 2: Frequency limit caused by TP.(LC02)<br>Bit 1: Frequency limit caused by current(LC03)<br>Bit 0: Frequency limit caused by voltage (LC05)<br><br>The display value is a hex number. For example, the digital display show 2A, the corresponding binary is 101010, so Bit5=1, Bit3=1, and Bit1=1. This means that a frequency limit may be caused by T3 or the current. |
| **14** | Outdoor unit fan speed | If it is higher than 99, light the decimal point of the high digit tube. (For example, the digital display tube show "2.0", so 2.0 multiplied by 10 to become 20, then added to 100 to become 120. This value is multiplied by 8, and it is the current fan speed: 120*8=960 |

**Manufacturer reserves the right to change, at any time, specifications and designs without notice and without obligations.**

| Number of Presses | Display | Remark |
|---|---|---|
| **15** | The average value of the temperature values detected by the high and low pressure sensors in the last 10 seconds of the compressor frequency calculation period | The displayed value is the actual value plus 60 (that is, when the displayed value is 10, the actual value is -50). When the displayed value is higher than 99, light the decimal point of the high digit tube. (if it displays 2.0, so 2.0 multiplied by 10 to become 20, then added to 100 to become 120, the actual value is 60)<br><br>When there is no pressure sensor, it is displayed as -- |
| **16** | The temperature value detected by the high and low pressure sensor | |
| **17** | AD value detected by the high and low pressure sensor | The display value is a hex number. For example, the digital display tube shows “Cd”, so C*161+d*160=12*16+13=205, it means AD value is 205.When there is no pressure sensor, it is displayed as -- |
| **18** | The currently running communication protocol version | 00-99 |

**Manufacturer reserves the right to change, at any time, specifications and designs without notice and without obligations.**

# GENERAL TROUBLESHOOTING

## SAFETY CAUTION

**WARNING**

Be sure to turn off all power supplies or disconnect all wires to avoid electric shock. While checking indoor/outdoor PCB, equip yourself with anti-static gloves or wrist strap to avoid damage to the board.

**WARNING**

Electricity remains in capacitors even when the power supply is off. Ensure the capacitors are fully discharged before troubleshooting.

**NOTE: Remember to discharge the electrical power in capacitor.**

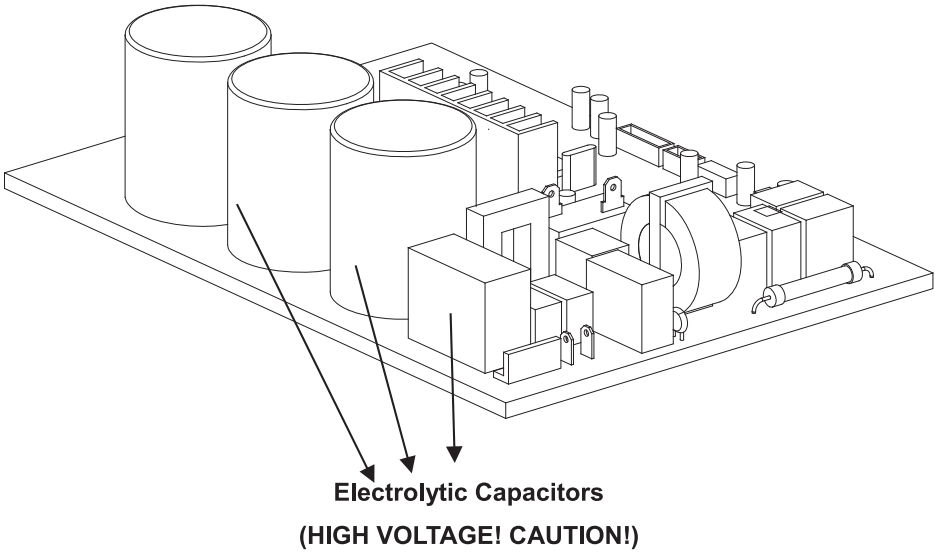


**Fig. 24 —Electrolytic Capacitors**

**For other models, please connect discharge resistance (approximately 100ƒÇ 40W) or a soldering iron (plug) between the +, - terminals of the electrolytic capacitor on the contrary side of the outdoor PCB.**

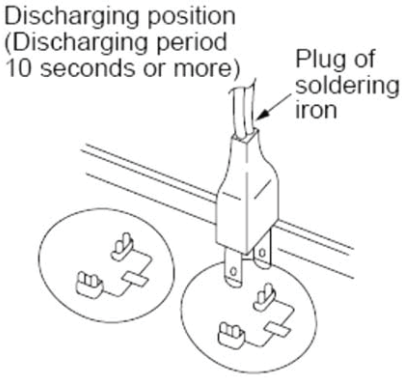


**Fig. 25 —Discharge Position**

**NOTE:** Figure is for reference only. The plug on your unit may differ.

**NOTE: If using the inverter test tool for troubleshooting, shut off power, remove the electrical panel and locate the cable that is already connected to the test port on the outdoor unit. Connect the test tool to the cable with the connector provided with the test tool. After the maintenance is completed, insert the female end back into the port.**

**For the R454B single zone ODU with capacity less than 24K, there will be the test tool connector. For 24K HH and 30K-60K single zone ODU, there is a diagnosis/check board which has digital display on it, you can read the parameters from it directly.**

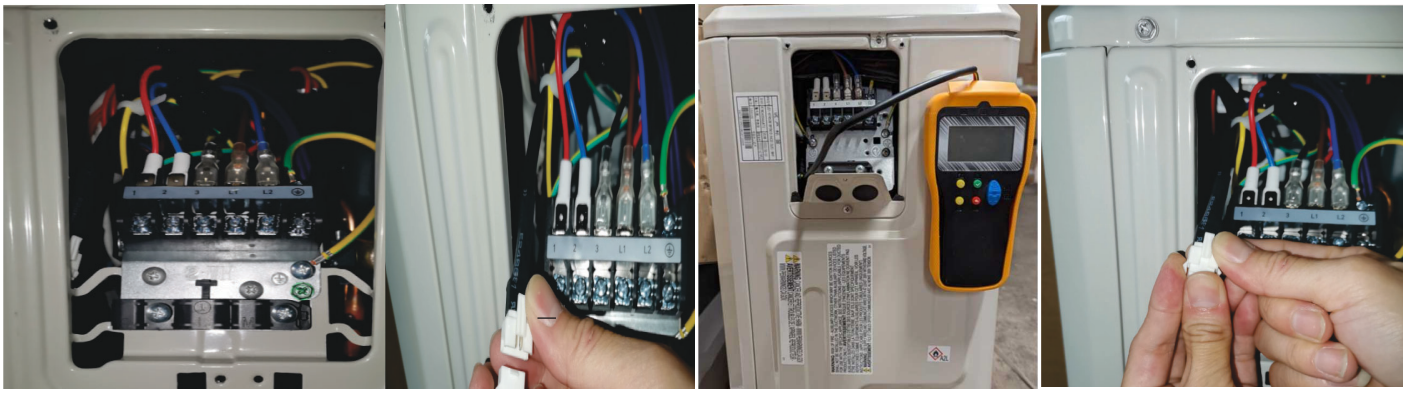

Step 1 Step 2 Step 3 Step 4

**Fig. 26 —Inverter Test Tool Maintenance**

Connect the Dr. SMART tool to the white terminal as shown in Step 3 above.

**Fig. 27 —Dr. SMART Tool**

**NOTE: These pictures is for reference only. Actual appearance may vary.**

# ERROR CODES

## Error Display

| Display | Indoor/Outdoor Code | Malfunction or Protection | Solution (Refer to Page) |
|---|---|---|---|
| df | N/A | Defrosting | Normal Display, not error code |
| FC | N/A | Forced cooling | |
| FH CC | IDU | Refrigerant Sensor Error | page 55 |
| EC 03 / EC 07 / EC 71 | ODU | Fan speed out of control | page 30 |
| EC 51 | ODU | EEPROM parameter error | page 26 |
| EC 52 | ODU | Coil temp. sensor(T3) error | page 33 |
| EC 53 | ODU | Ambient temp. sensor(T4) error | page 33 |
| EC 54 | ODU | COMP. discharge temp. sensor (TP) error | page 33 |
| EC 55 | ODU | IPM module temperature sensor malfunction | page 35 |
| EL 0C | IDU & ODU | System Lacks Refrigerant Diagnosis and Solution | page 36 |
| EH 00 / EH0A | IDU & ODU | EEPROM Malfunction Error Diagnosis and Solution | page 26 |
| EH02 | IDU | Zero Crossing Detection Error | page 29 |
| EH b3 | IDU | Communication Malfunction Between Wire and Master Control | page 54 |
| EH bA | IDU & ODU | Communication Malfunction Between Wire and Master Control | page 54 |
| EH C1 | IDU | Refrigerant Sensor Detects Leakage | page 56 |
| EH C2 | IDU | Refrigerant Sensor is Out of Range and Leakage is Detected | page 56 |
| EH CC / FH CC | IDU | Refrigerant sensor error or Refrigerant sensor is out of range | page 55 |
| EH 3b | IDU & ODU | External Fan DC Bus Voltage is Too High | page 54 |
| EH 06 | IDU | IDU Main Control Board and Display Board Communication Error Diagnosis and Solution | page 57 |
| EH 0E | IDU | Water-Level Alarm Malfunction Diagnosis and Solution | page 37 |
| EH 60 / EH 61 | IDU & ODU | Open circuit or Short Circuit Of Temperature Sensor | page 33 |
| EC 57 | ODU | Refrigerant pipe temperature sensor error | page 33 |
| EC 5C | ODU | Suction Transducer Failure | page 32 |
| EL 01 | IDU & ODU | Communication error | page 27 |
| EL 16 | ODU | Communication malfunction between adapter board and ODU main board | page 58 |
| FL 09 | IDU & ODU | Mismatch between the new and old platforms diagnosis and solution | page 58 |
| PC 00 | ODU | IPM module protection | page 38 |
| PC 02 | ODU | Refrigerant Sensor Detects Leakage (ODU error code) | page 56 |
| PC 04 | ODU | Inverter Compressor Drive Error Diagnosis and Solution | page 43 |
| PC 06 | ODU | Discharge temperature protection of compressor | page 40 |
| PC 08 | ODU | Outdoor overcurrent protection | page 49 |
| PC 0A | ODU | High temperature protection of condenser | page 51 |
| PC 0F | ODU | PFC module protection | page 52 |
| PC 0L | ODU | Low Ambient Temperature Protection | page 54 |
| PC 10 | ODU | Low AC voltage protection | page 53 |
| PC 11 | ODU | Main control board DC bus high voltage protection | page 53 |
| PC 12 | ODU | Main control board DC bus high voltage protection /341 MCE error | page 53 |
| PC 03 | IDU | * Pressure Protection (low or high pressure) | page 41 |
| PC 30 | ODU | System high pressure protection | page 41 |
| PC 31 | ODU | Low Pressure Protection | page 41 |

**Manufacturer reserves the right to change, at any time, specifications and designs without notice and without obligations.**

| Display | Indoor/Outdoor Code | Malfunction or Protection | Solution (Refer to Page) |
|---|---|---|---|
| PC 40 | ODU | Communication error between ODU main chip and compressor driven chip | page 44 |
| PC 41 | ODU | Compressor current sampling failure | page 45 |
| PC 42 | ODU | Compressor start failure of outdoor unit | page 49 |
| PC 43 | ODU | Compressor lack phase protection | page 46 |
| PC 44 | ODU | Zero speed protection | page 49 |
| PC 45 | ODU | IR chip drive failure | page 47 |
| PC 46 | ODU | Compressor speed has been out of control | page 49 |
| PC 49 | ODU | Compressor overcurrent failure | page 49 |
| LC 06 | ODU | High temperature protection of Inverter module (IPM) | page 40 |
| PH 90 | IDU & ODU | High temperature protection of evaporator | page 59 |
| PH 91 | IDU & ODU | Low temperature protection of evaporator | page 60 |

**NOTE: PC03 Low pressure protection switch is open. Check the switch and repair or leak check the unit and recharge.**

**NOTE: When outdoor is paired with Furnace and Fan Coils on 24V connections, error codes listed above will not be available at the IDU, but will appear on KSAIC0701230 Crossover Interface display as required for use with crossover applications..**

# TROUBLESHOOTING BY ERROR CODE

## EH 00/ EH 0A / EC 51 (EEPROM Malfunction Error Diagnosis and Solution)

**Description:** Indoor or outdoor PCB main chip does not receive feedback from EEPROM chip.

**Recommended parts to prepare: Indoor PCB, Outdoor PCB**

**Troubleshooting and repair:**

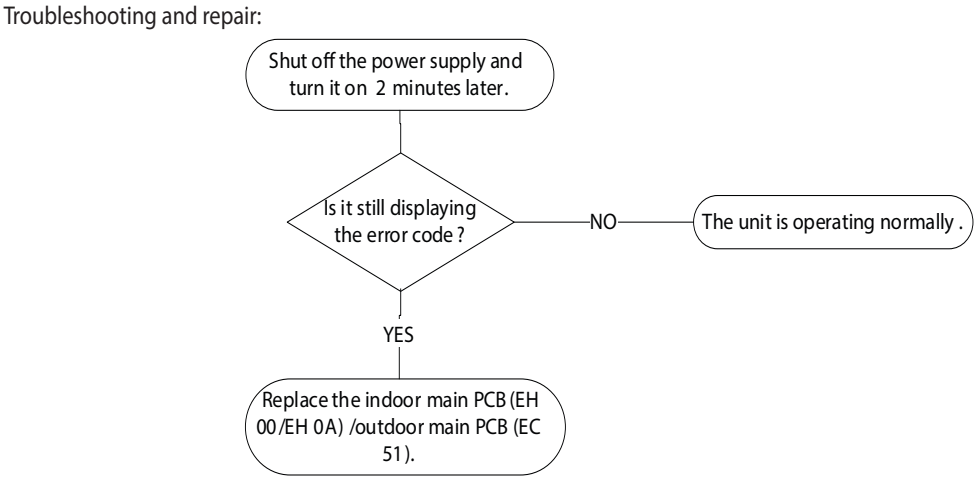


**Fig. 28 —EC 51**

**Remarks:**

**EEPROM:** A read-only memory whose contents can be erased and reprogrammed using a pulsed voltage.

The location of the EEPROM chip on the outdoor PCB is shown in the following image:

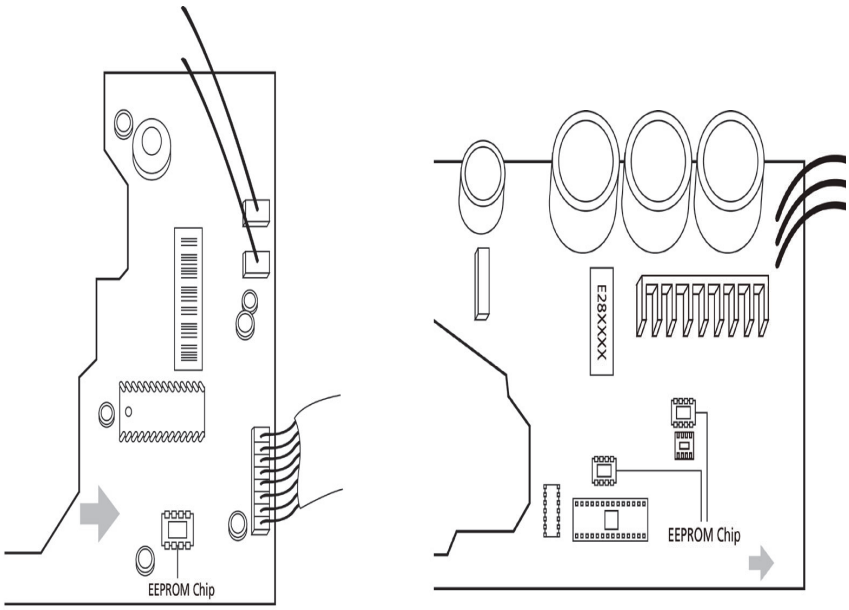


**Fig. 29 —Location of EPROM Chip**

**NOTE:** This picture is only for reference, actual appearance may vary.

**IMPORTANT:** Troubleshooting and repair of compressor driven chip EEPROM parameter error sand communication errors between outdoor main chip and compressor driven chip are same as EC 51.

# EL 01 (Indoor and Outdoor Unit Communication Error Diagnosis and Solution)

**Description: Indoor unit can not communicate with outdoor unit.**

**Recommended parts to prepare: Indoor PCB, Outdoor PCB**

**Troubleshooting and repair:**

**:**

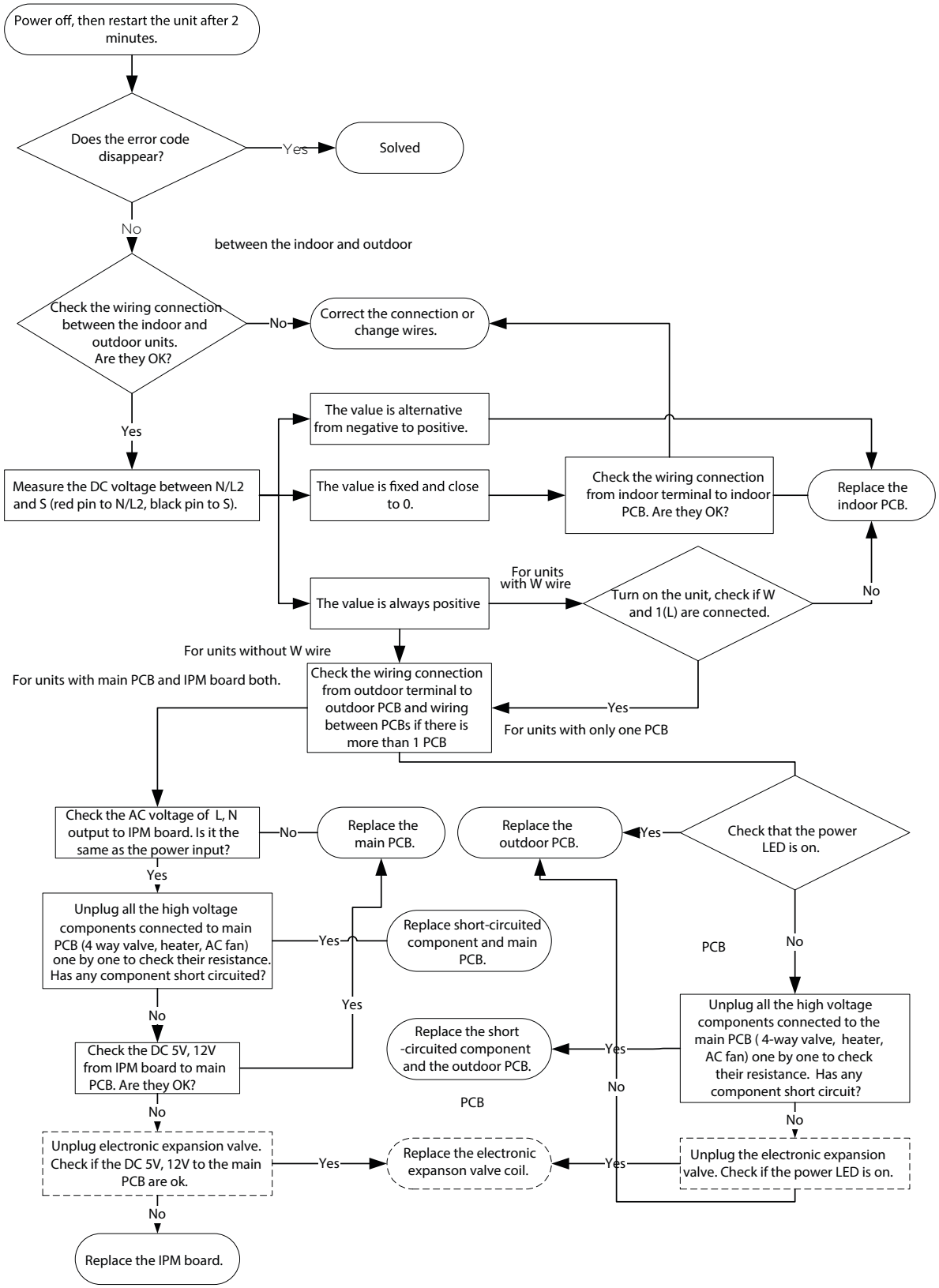


**For certain models, outdoor PCB could not be removed separately. In this case, the outdoor electric control box should be replaced as a whole.**

## EL 01 (Continued)

**Remarks:**

• Use a multimeter to test the DC voltage between the 2 port (or S or L2 port) and 3 port (or N or S port) of the outdoor unit.

• The multimeter's red pin connects with the 2 port (or S or L2 port) while the black pin is for the 3 port (or N or S port). If the unit is running normally, the voltage moves alternately as positive values and negative values.

• If the outdoor unit malfunctions, the voltage remains a narrow positive value.

• If the indoor unit malfunctions, the voltage value will be fixed.

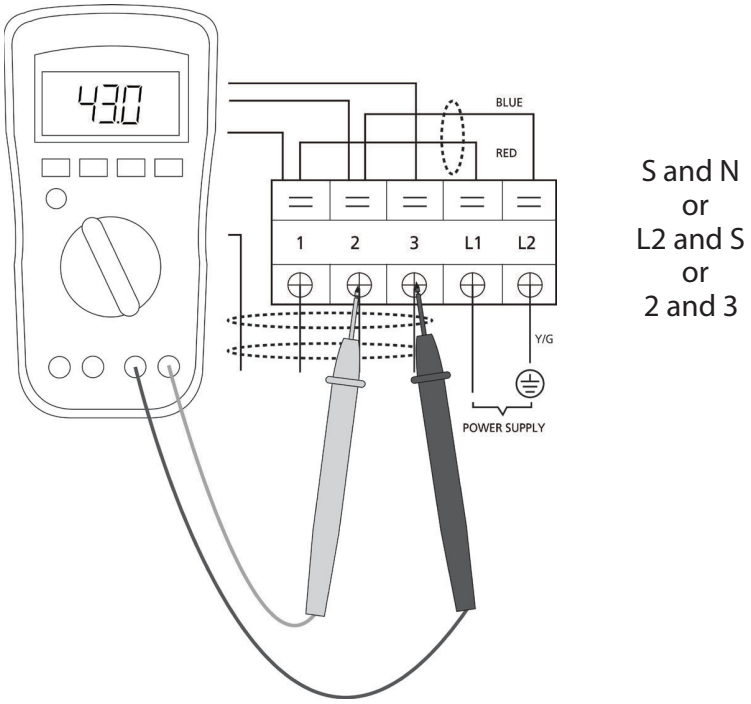


**Fig. 30 —Measure Voltage Between Ports**

Use a multimeter to test the reactor's resistance which does not connect with the capacitor.

• The normal value should be around zero ohm. Otherwise, the reactor has malfunctioned. Check the reactor to ensure it is not shorted to ground.

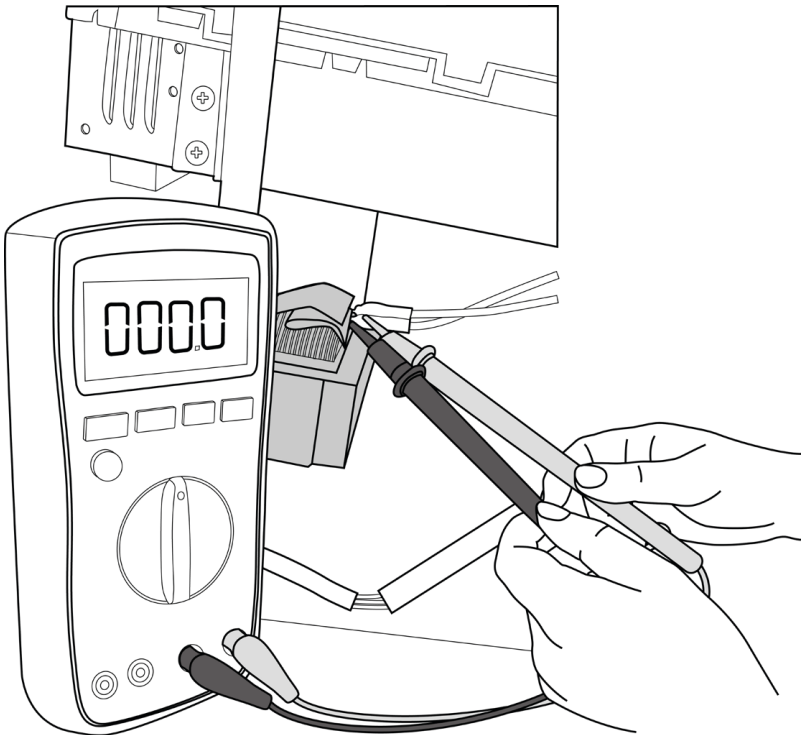


**Fig. 31 —Test Reactor Resistance**

## EH 02 Zero Crossing Detection Error Diagnosis and Solution

**Description: When the PCB does not receive a zero crossing signal feedback for 4 minutes or the zero crossing signal time interval is abnormal.**

**Recommended parts to repair: Connection wires, Indoor main PCB**

**Troubleshooting:**

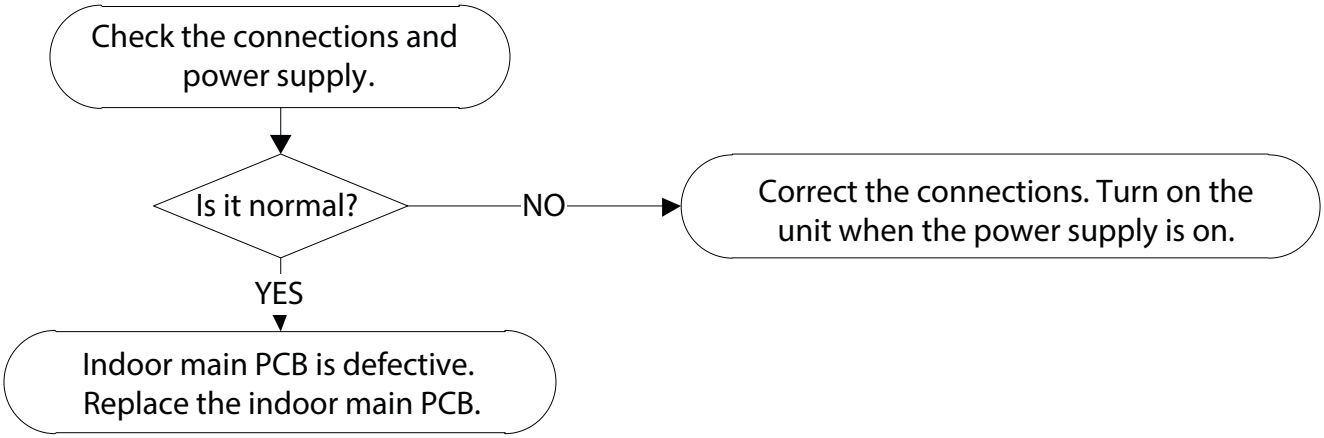


**NOTE:** A zero crossing detection error is only valid for a unit with an AC fan motor. For other models, this error does not apply.

## EH03 / EC 07/ EC 71(Fan Speed Is Operating Outside of Normal Range Diagnosis and Solution)

**Description: When indoor / outdoor fan speed keeps too low or too high for a certain time, the LED displays the failure code and the AC turns off.**

**Recommended parts to prepare: Connection wires, Fan assembly, Fan motor, PCB**

**Troubleshooting and repair:**

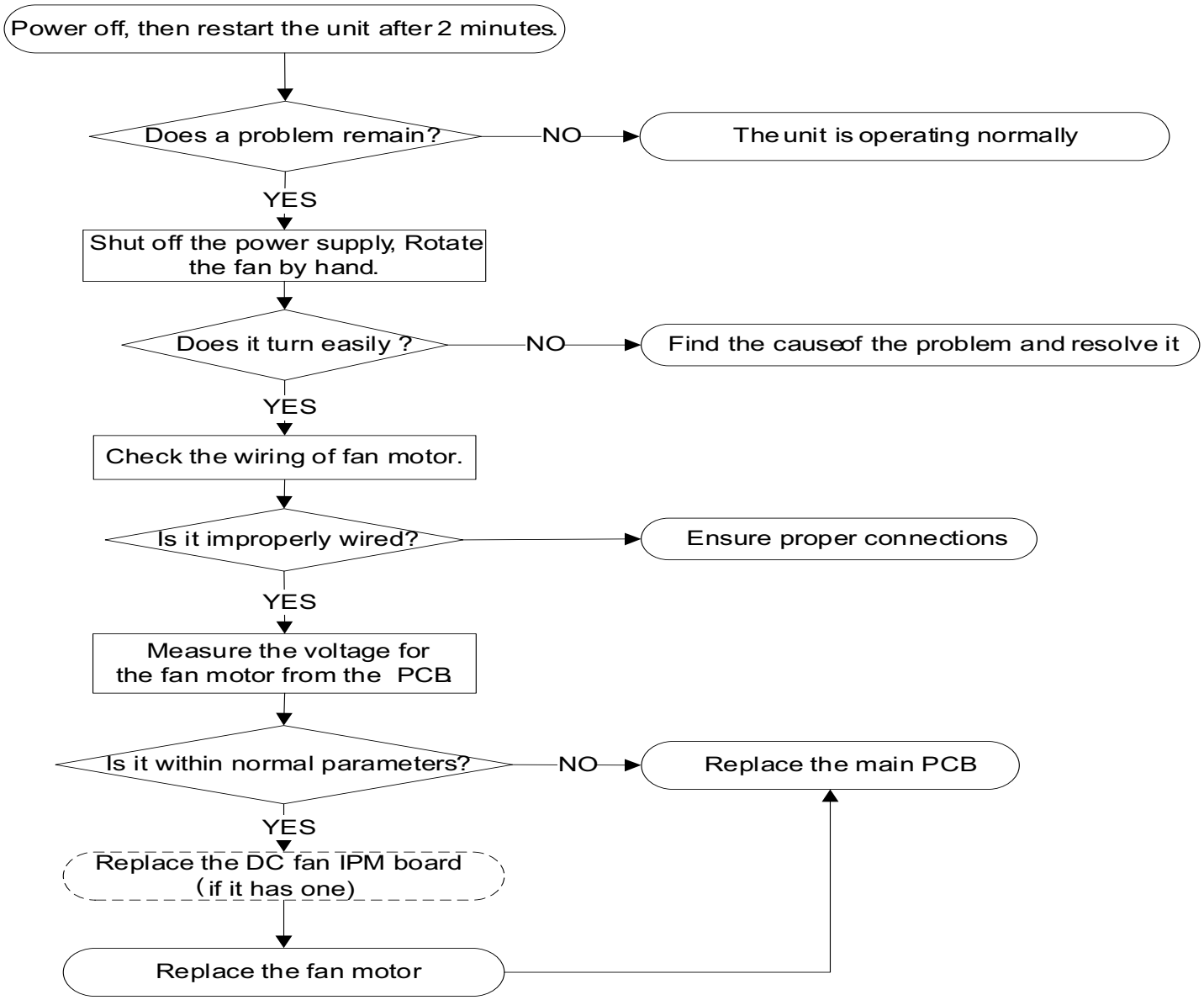

## Outdoor DC Fan Motor (DC motor that controls the chip on the PCB)

1. Release the UVW connector. Measure the resistance of U-V, U-W, V-W. If the resistance is not equal to each other, the fan motor is faulty and must be replaced. Otherwise, proceed to step 2.
2. Power on the unit and when the unit is in standby, measure the pin4-5 voltage in the feedback signal connector. If the value is not 5V, change the PCB. Otherwise, proceed to step 3.
3. Rotate the fan by hand, measure the pin1-5, pin 2-5 and pin 3-5 voltage levels in the feedback signal connector. If any voltage is not in the positive voltage fluctuation, the fan motor is faulty and must be replaced.

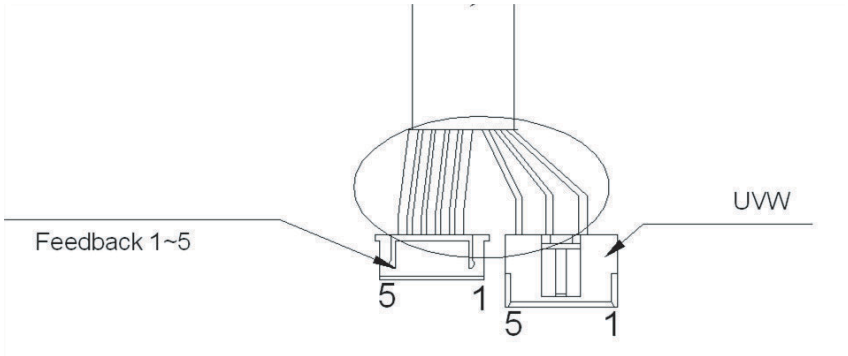


**Fig. 32 —Outdoor DC Fan Motor (DC motor that controls the chip on the PCB)**

| NO. | 1 | 2 | 3 | 4 | 5 |
|---|---|---|---|---|---|
| COLOR | Orange | Grey | White | Pink | Black |
| SIGNAL | Hu | Hv | Hw | Vcc | GND |

| COLOR | Red | Blue | Yellow |
|---|---|---|---|
| SIGNAL | W | V | U |

## EC 5C (Suction Transducer is in open circuit or has short circuited) diagnosis and solution

**Description: If the sampling voltage is lower than 2V or higher than 254V, the LED displays the failure code.**

**Recommended parts to prepare:**

- **Connection wires**
- **Sensor**
- **Outdoor PCB**

**Troubleshooting and repair:**

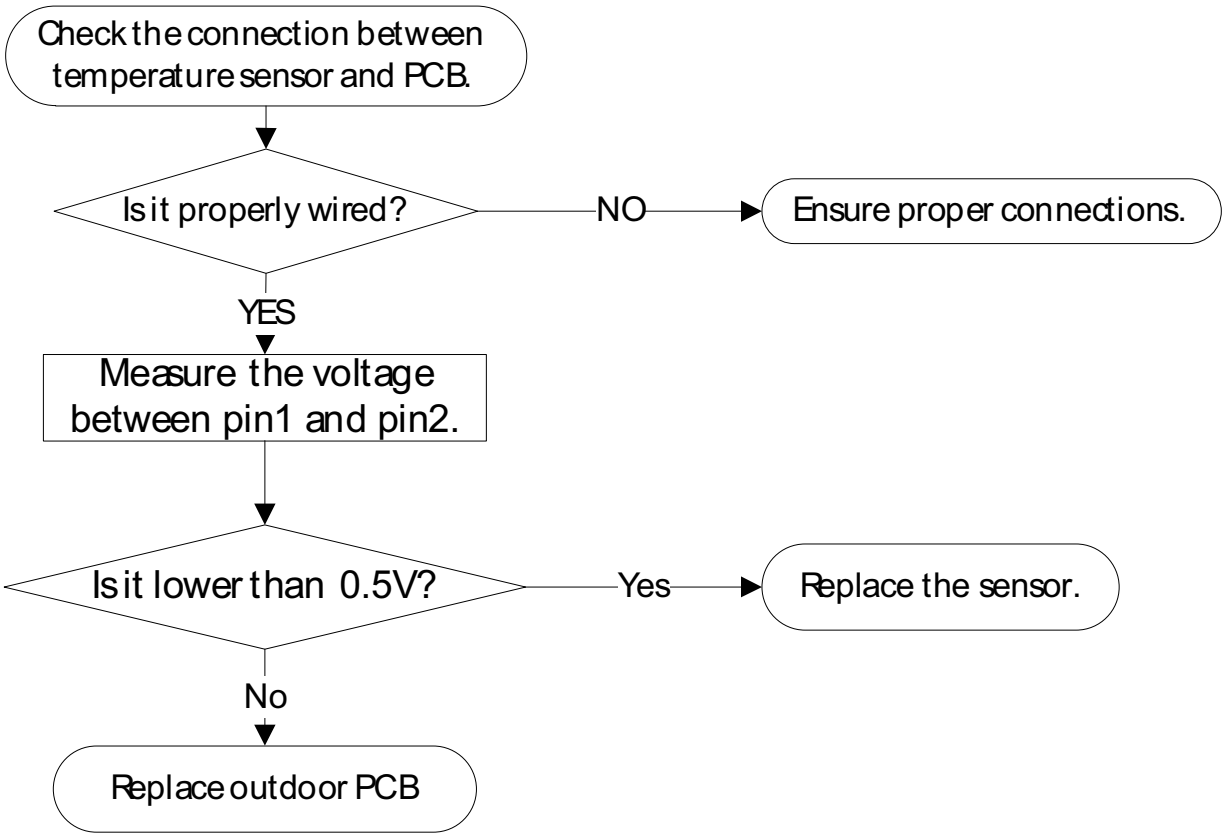

## EC 53/ EC 52/ EC 54/ EC 56/ EC 57/ EC 50/ EH 60/ EH 61(Open Circuit or Short Circuit of Temperature Sensor Diagnosis and Solution)

**Description: If the sampling voltage is lower than 0.06V or higher than 4.94V, the LED displays the failure.**

**Recommended parts to prepare: Connection wires, Sensors, PCB**

**Troubleshooting and repair:**

**Refer to Appendix, page 92.**

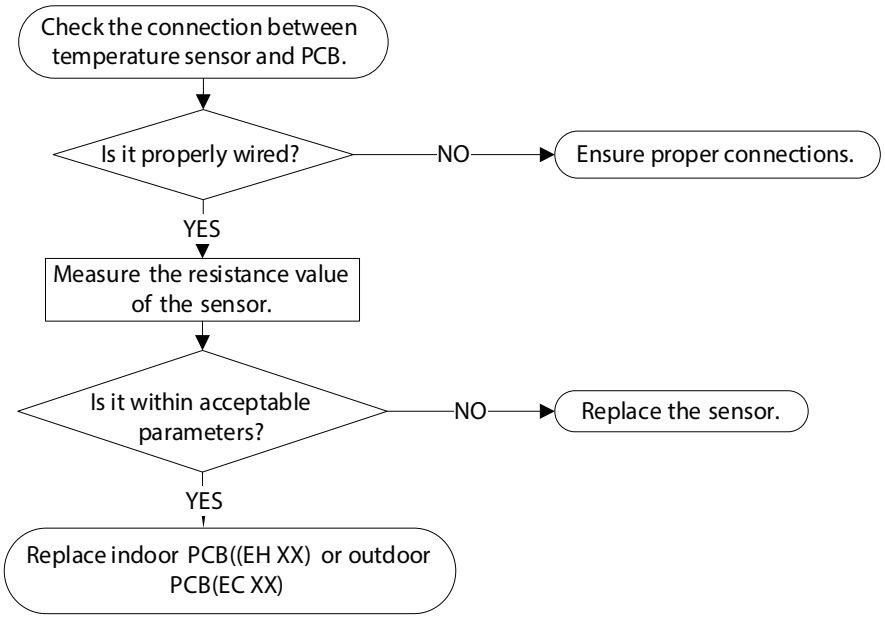


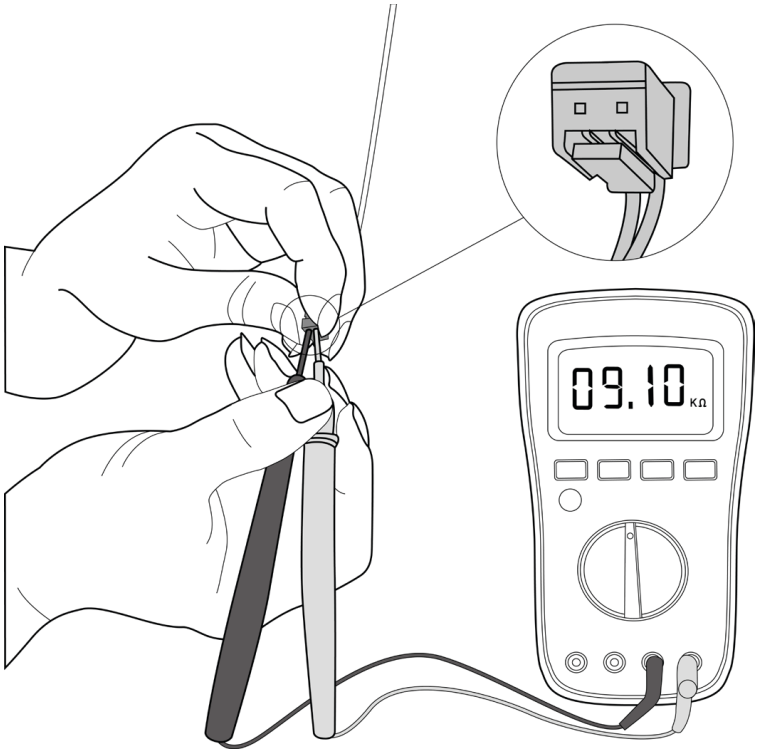


**NOTE:** This picture and the value are only for reference, actual appearance and value may vary.

## EC 72 Lack phase failure of ODU DC fan motor diagnosis and solution

**Description: When the three-phase sampling current of the DC motor is abnormal, especially when the current of one or more phases is always small and almost 0, the LED displays the failure code.**

**Recommended parts to prepare: Connection wire, Fan motor, Outdoor PCB**

**Troubleshooting and repair:**

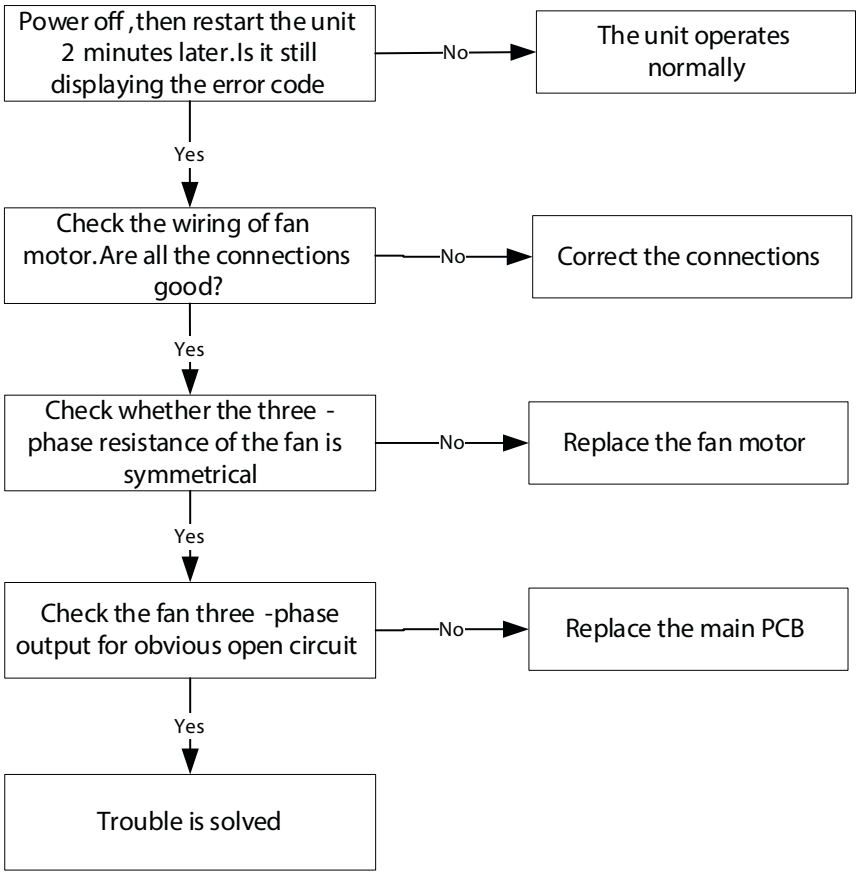

## EC 55 (ODU IPM module temperature sensor malfunction diagnosis and solution)

**Description: If the sampling voltage is 0V or 5V, the LED displays the failure code.**

**Recommended parts to prepare:**

- **IPM module PCB**
- **Connection wires**
- **Sensors**
- **Outdoor main PCB**

**Troubleshooting and repair: If the radiator has no sensor, follow the steps below to resolve:**

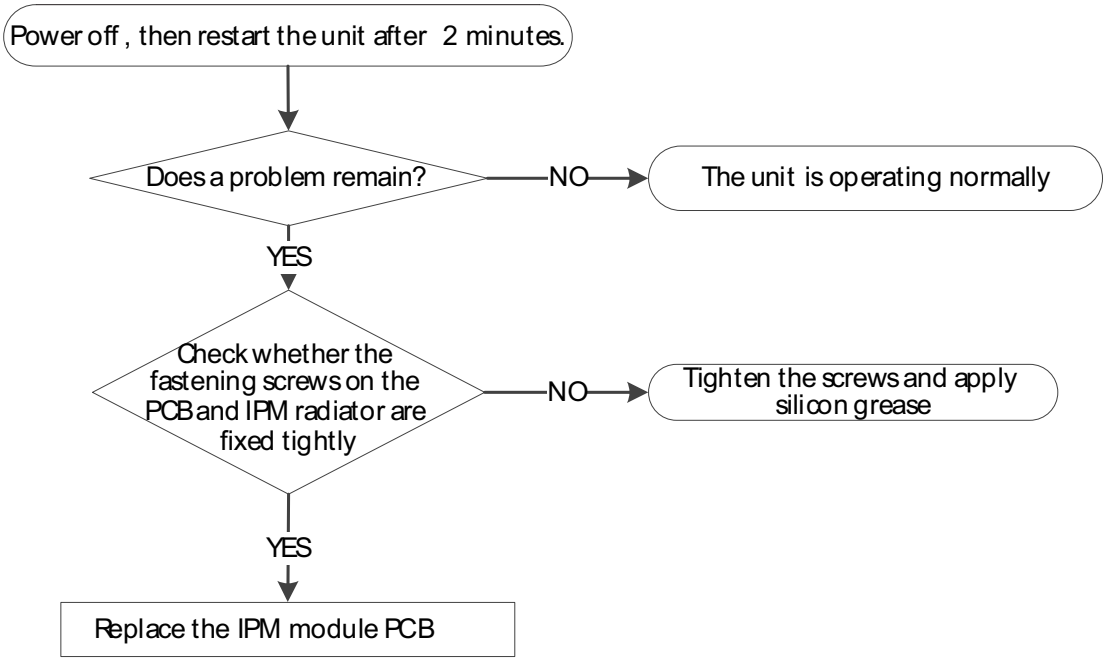


If the radiator has a sensor(TH), follow the steps below:

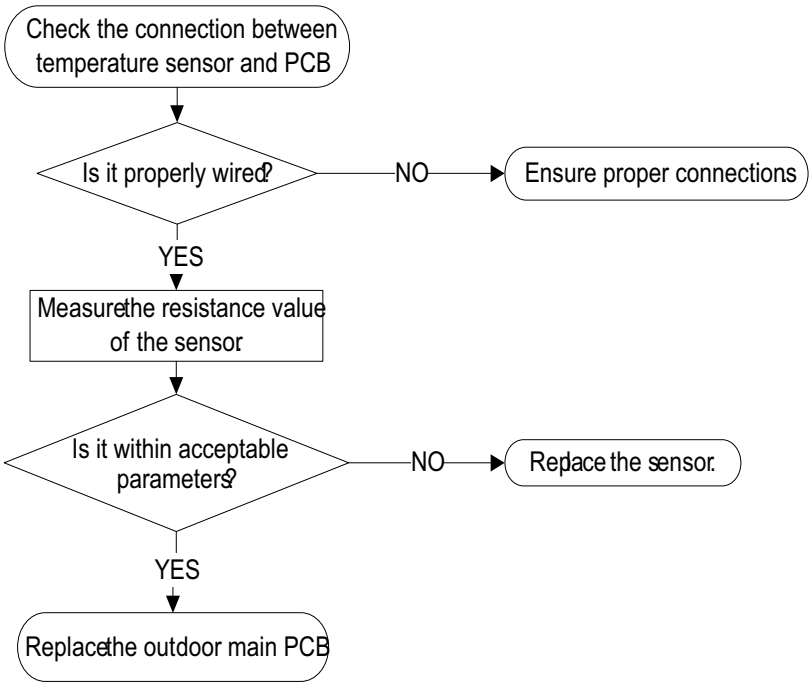

## EL 0C (System Lacks Refrigerant Diagnosis and Solution)

**Description: Judging the abnormality of the refrigeration system according to the number of compressor stops and the changes in operating parameters caused by excessive exhaust temperature.**

**Recommended parts to prepare: Indoor PCB, Additional refrigerant**

**Troubleshooting and repair:**

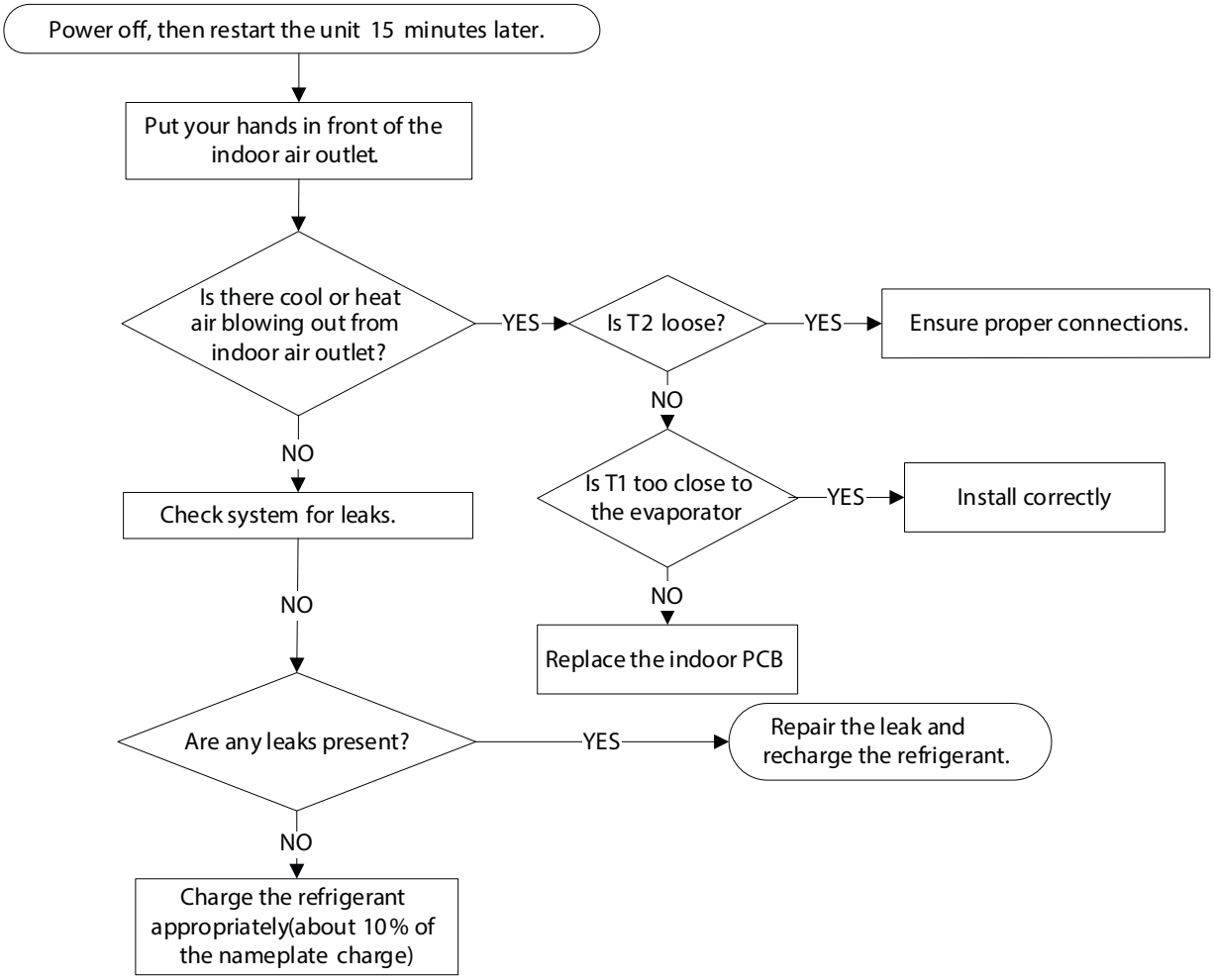

## EH 0E (Water-Level Alarm Malfunction Diagnosis and Solution)

**Description: If the sampling voltage is not 5V, the LED displays the failure code.**

**Recommended parts to prepare: Connection wires, Water-level switch, Water pump, Indoor PCB**

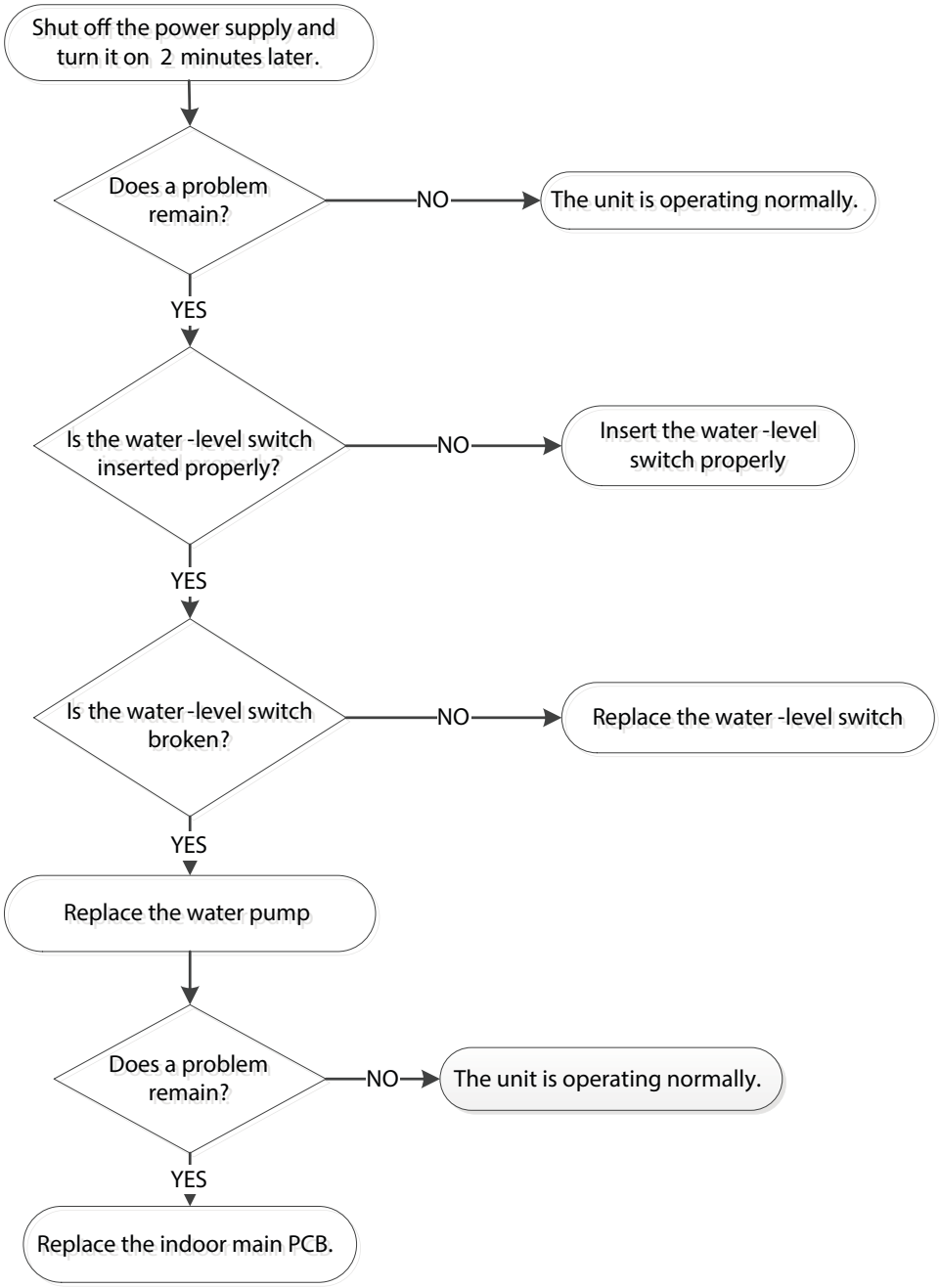

## PC 00 (ODU IPM Module Protection Diagnosis and Solution)

**Description: When the voltage signal the IPM sends to the compressor drive chip is abnormal, the display LED shows "PC 00" and the AC turn off.**

**Recommended parts to prepare: Connection wires, IPM module board, Outdoor fan assembly, Compressor, Outdoor PCB**

**Troubleshooting and repair:**

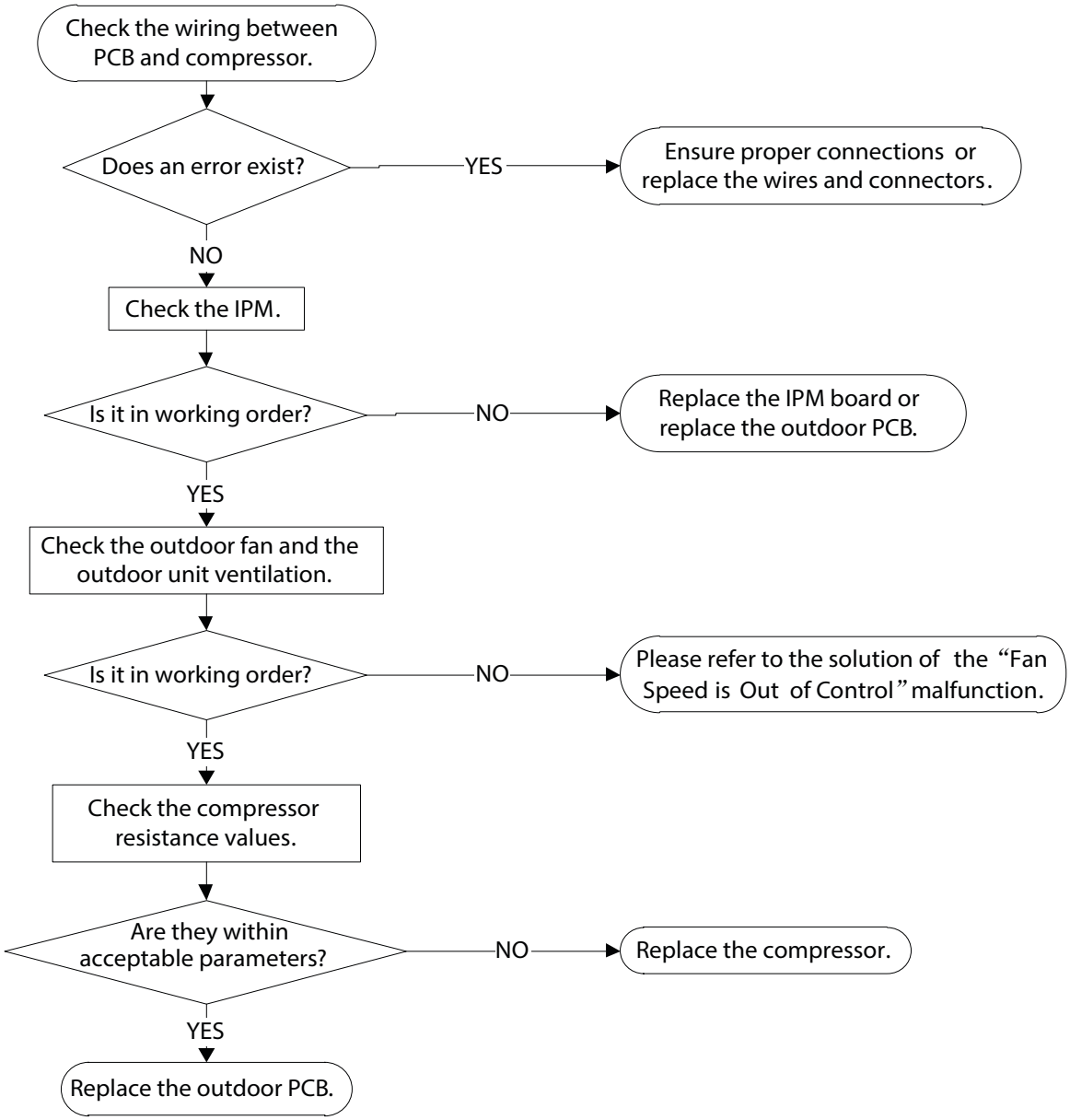


**NOTE:** For certain models, the outdoor PCB can not be removed separately. In this case, the outdoor electric control box should be replaced as a whole.

## PC 10 / PC 11 / PC 12 (ODU Voltage Protection Diagnosis and Solution)

**PC 10 (Outdoor unit low AC voltage protection) / PC 11 (Outdoor unit main control board DC bus high voltage protection) / PC 12 (Outdoor unit main control board DC bus high voltage protection/341 MCE error) Diagnosis and Solution)**

**Description: Abnormal increases or decreases in voltage are detected by checking the specified voltage detection circuit.**

**Recommended parts to prepare: Power supply wires, IPM module board, PCB, Reactor**

**Troubleshooting and repair:**

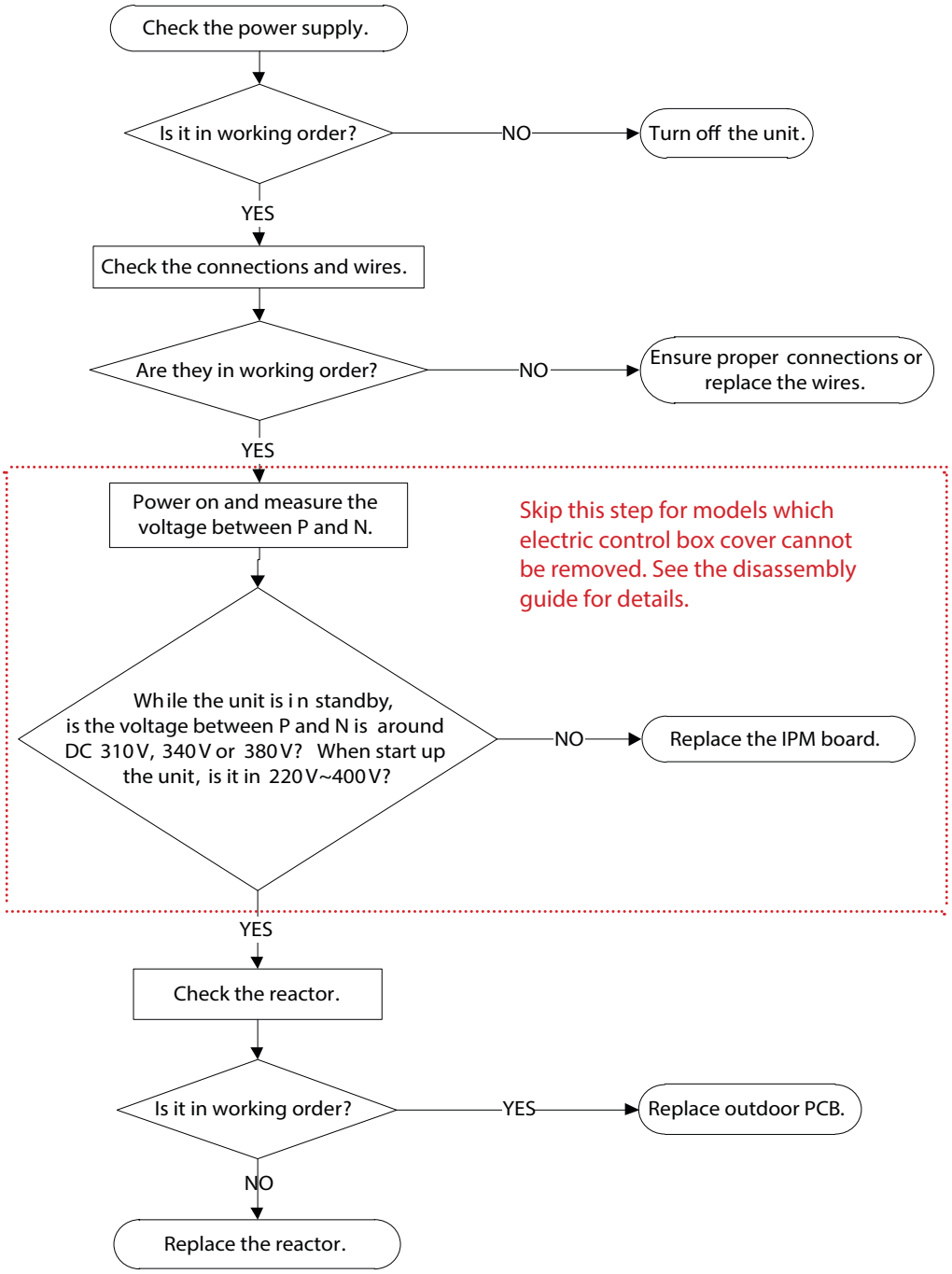


**NOTE:** For certain models, the outdoor PCB cannot be removed separately. In this case, the outdoor electric control box should be replaced as a whole.

## LC 06 (Compressor Top (or IPM) Temp. Protection Diagnosis and Solution)

**Description:** **For some models with overload protection, If the sampling voltage is not 5V, the LED will display the failure. If the temperature of IPM module is higher than a certain value, the LED displays the failure code.**

**Recommended parts to prepare: Connection wires, Outdoor PCB, IPM module board, High pressure protector, System blockages**

**Troubleshooting and repair:**

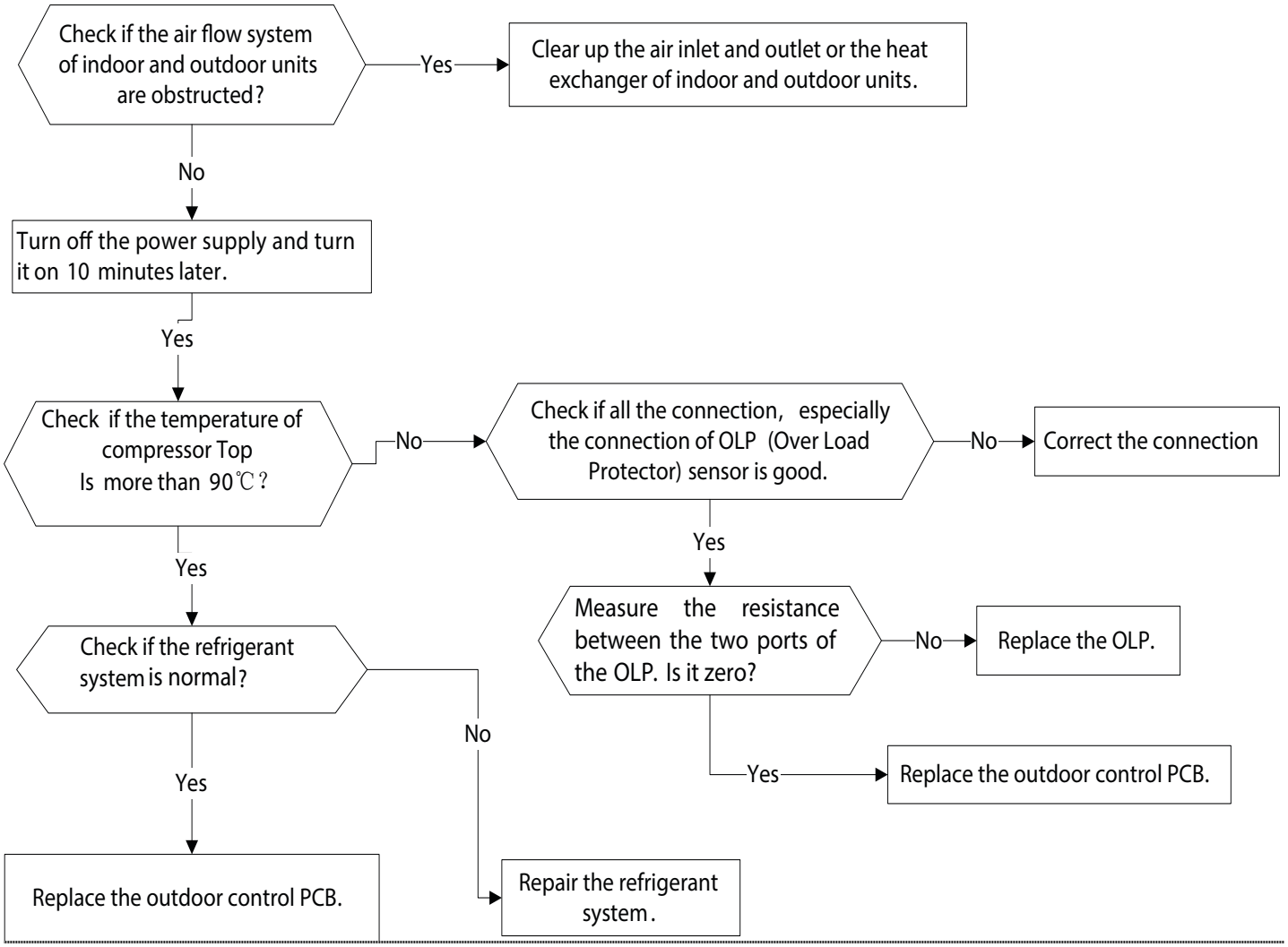


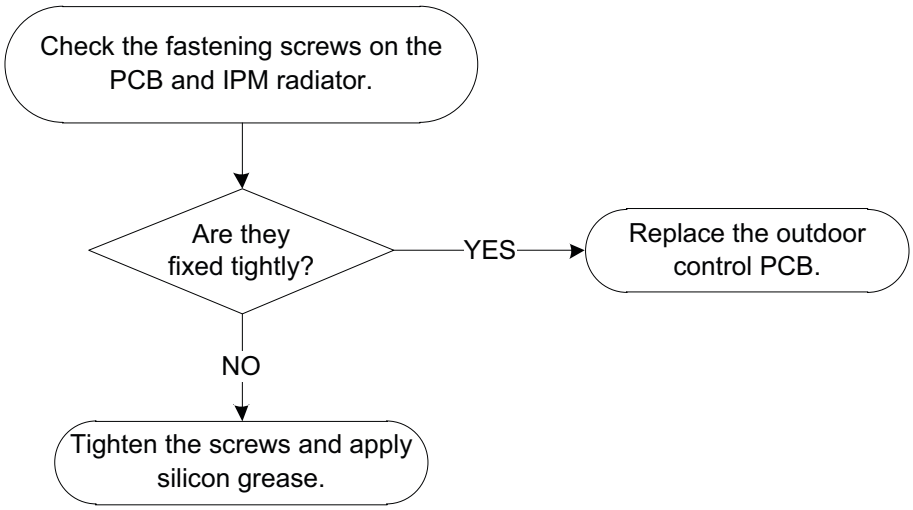

## PC 03 Pressure Protection (low or high pressure), PC 30 High Pressure Protection, PC 31 Low Pressure Protection (Diagnosis and Solution)

**Description: Outdoor pressure switch cut off the system because high pressure is higher than 4.4 MPa or outdoor pressure switch cut off the system because low pressure is lower than 0.13 MPa, the LED displays the failure code.**

**Recommended parts to prepare: Connection wires, Pressure switch, Outdoor fan, Outdoor main PCB, Refrigerant**

**Troubleshooting and repair:**

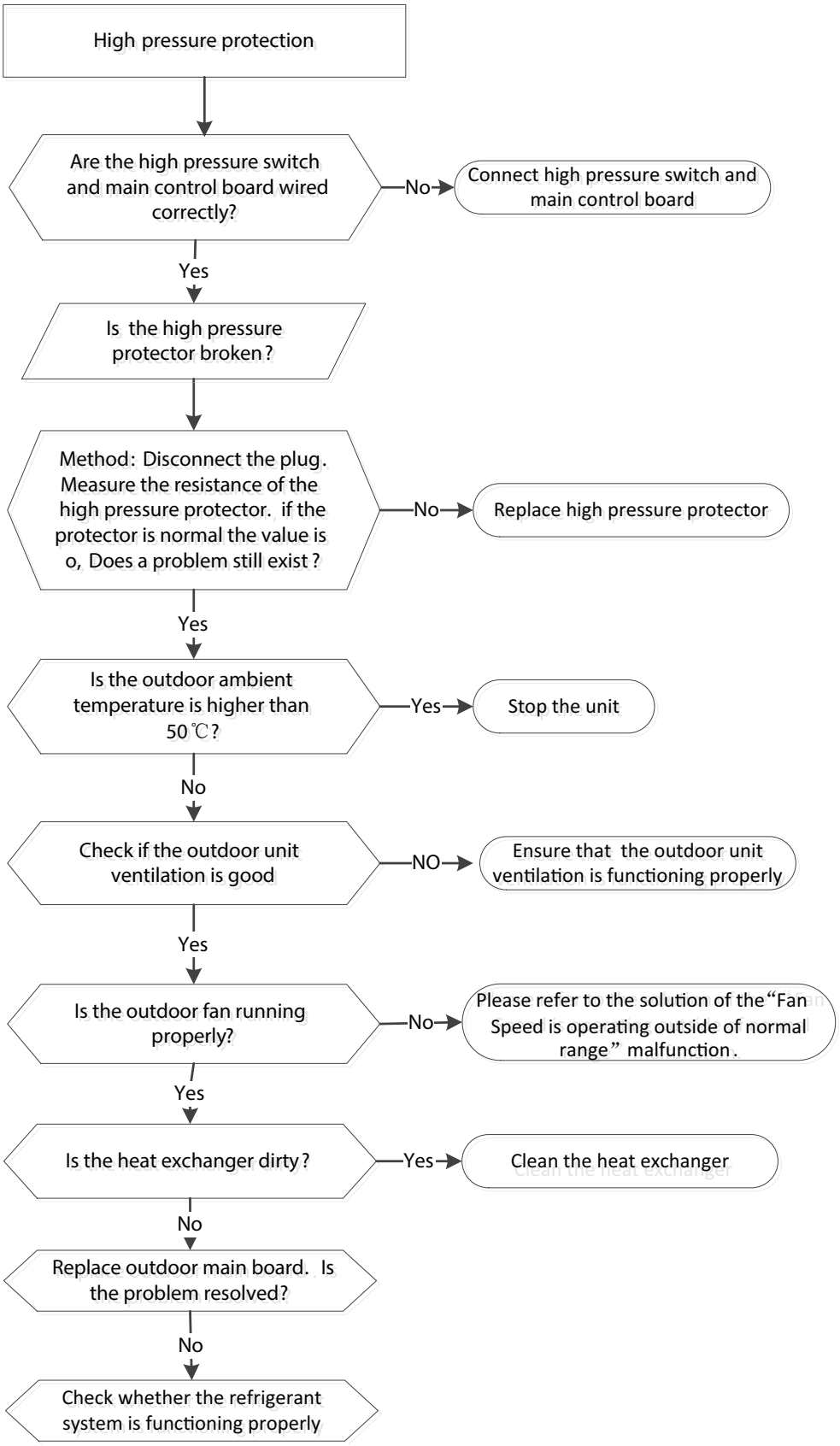

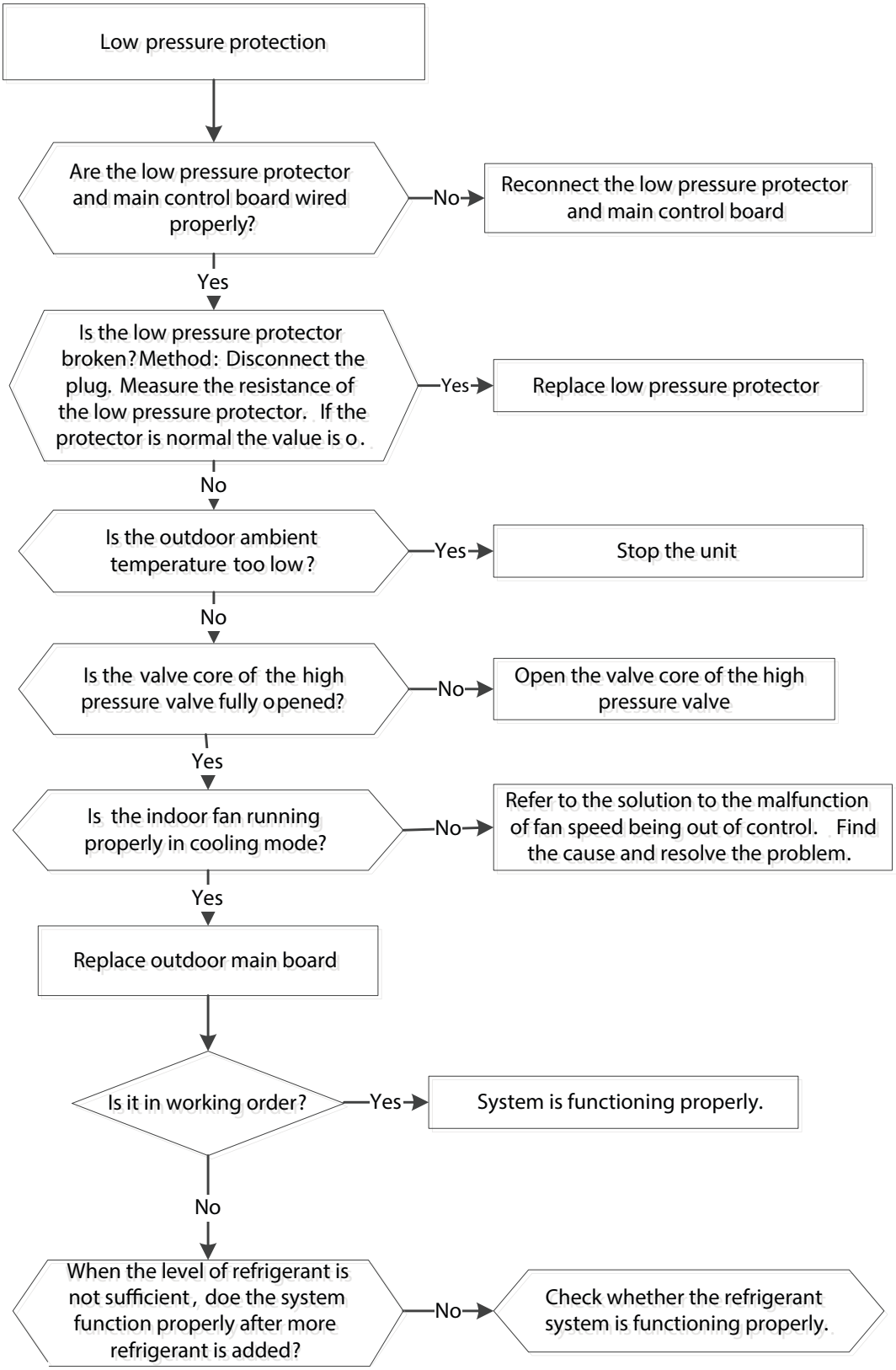
Low pressure protection
Are the low pressure protector and main control board wired properly?
No
Reconnect the low pressure protector and main control board
Yes
Is the low pressure protector broken? Method: Disconnect the plug. Measure the resistance of the low pressure protector. If the protector is normal the value is o.
Yes
Replace low pressure protector
No
Is the outdoor ambient temperature too low?
Yes
Stop the unit
No
Is the valve core of the high pressure valve fully opened?
No
Open the valve core of the high pressure valve
Yes
Is the indoor fan running properly in cooling mode?
No
Refer to the solution to the malfunction of fan speed being out of control. Find the cause and resolve the problem.
Yes
Replace outdoor main board
Is it in working order?
Yes
System is functioning properly.
No
When the level of refrigerant is not sufficient, doe the system function properly after more refrigerant is added?
No
Check whether the refrigerant system is functioning properly.

## PC 04 (Inverter Compressor Drive Error Diagnosis and Solution)

**Description: An abnormal inverter compressor drive is detected by a special detection circuit, including communication signal detection, voltage detection, compressor rotation speed signal detection and so on.**

**Recommended parts to prepare: Connection wires, IPM module board, Outdoor fan assembly, Compressor, Outdoor PCB**

**Troubleshooting and repair:**

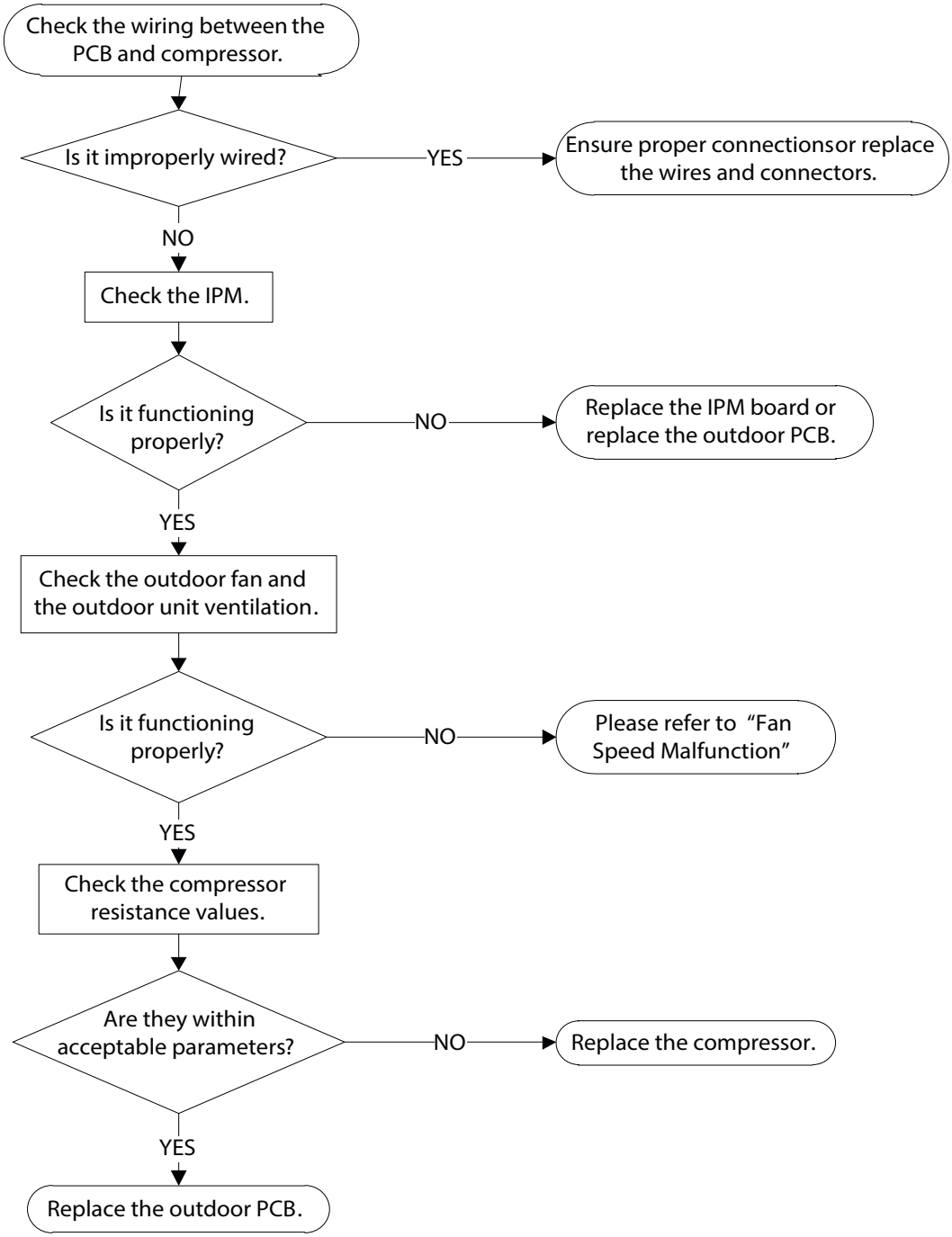

## PC 40 (Communication error between ODU main chip and compressor driven chip diagnosis and solution)

**Description: The main PCB cannot detect the IPM board.**

**Recommended parts to prepare: Connection wires, Outdoor PCB, IPM module board, Electric control box**

**Troubleshooting and repair:**

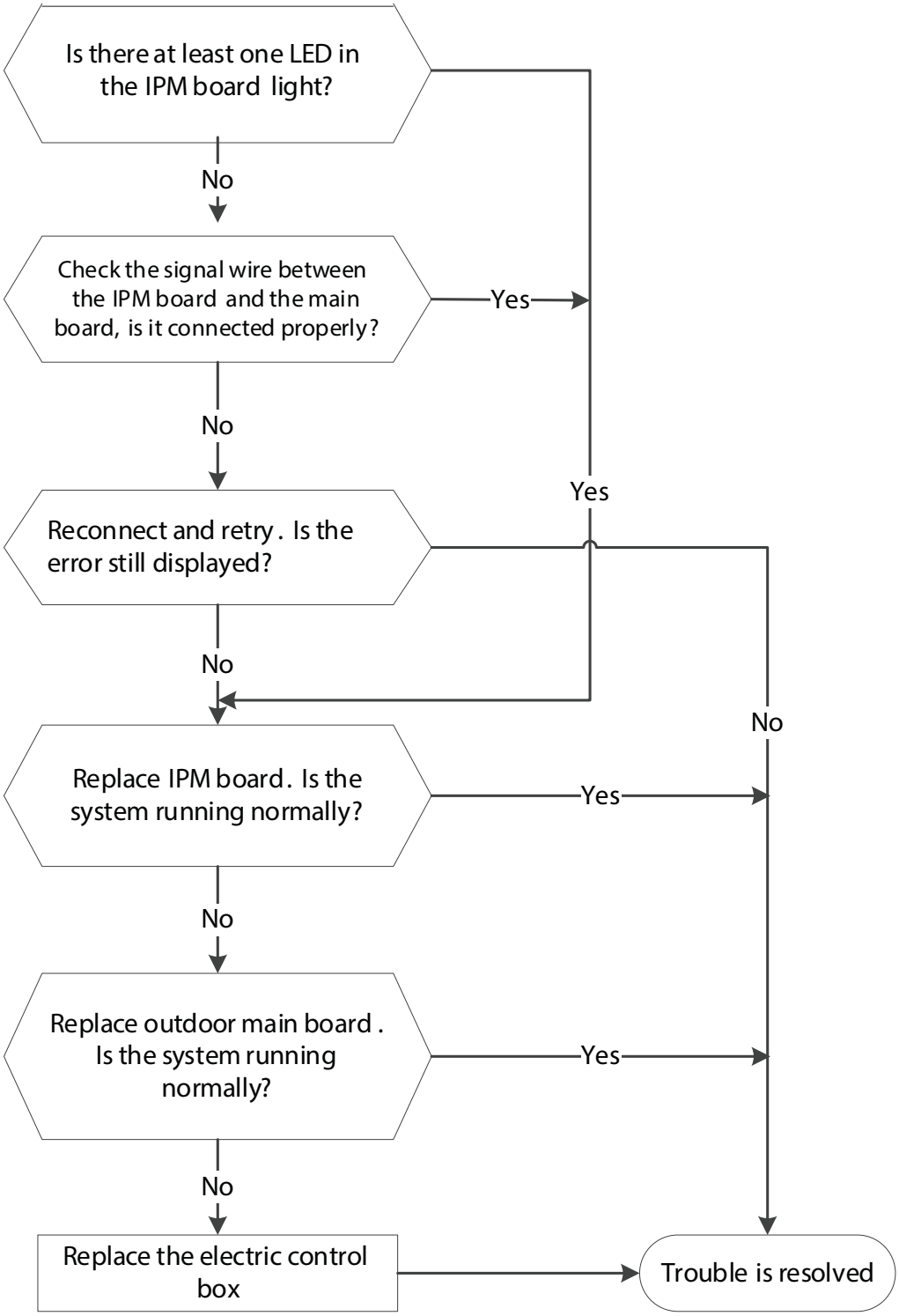

## PC 41 (Outdoor compressor current sampling circuit failure diagnosis and solution)

**Description: Three-phase sampling offset voltage error, the static bias voltage is normally 2.5V.**

**Recommended parts to prepare: Outdoor main PCB**

**Troubleshooting and repair:**

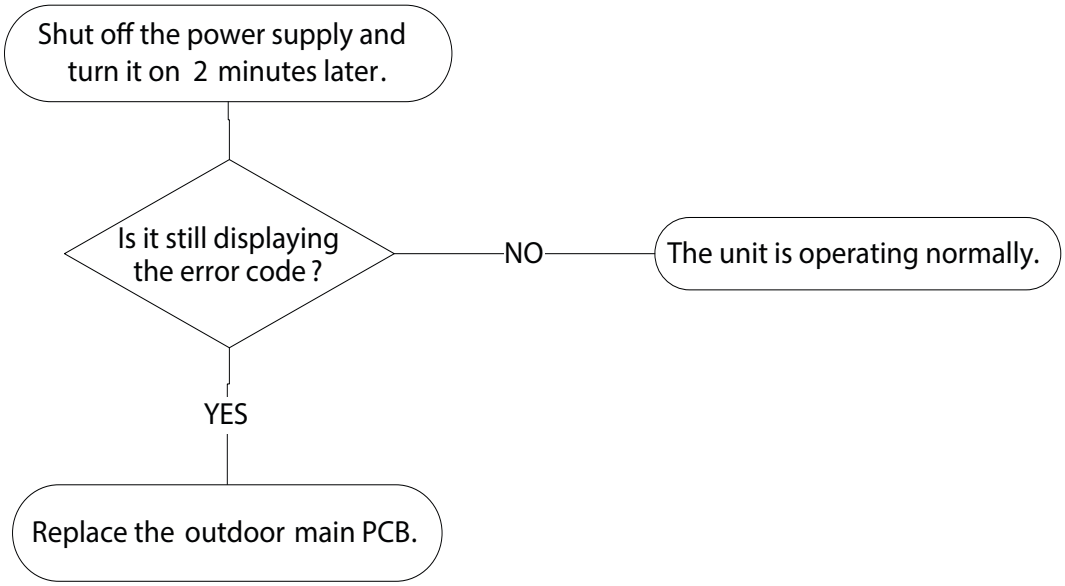

## PC 43 (ODU compressor lack phase protection diagnosis and solution)

**Description: When the three-phase sampling current of the compressor is abnormal, especially when the current of one or more phases is always small and almost 0, the LED displays the failure code.**

**Recommended parts to prepare: Connection wire, Compressor, Outdoor PCB**

**Troubleshooting and repair:**

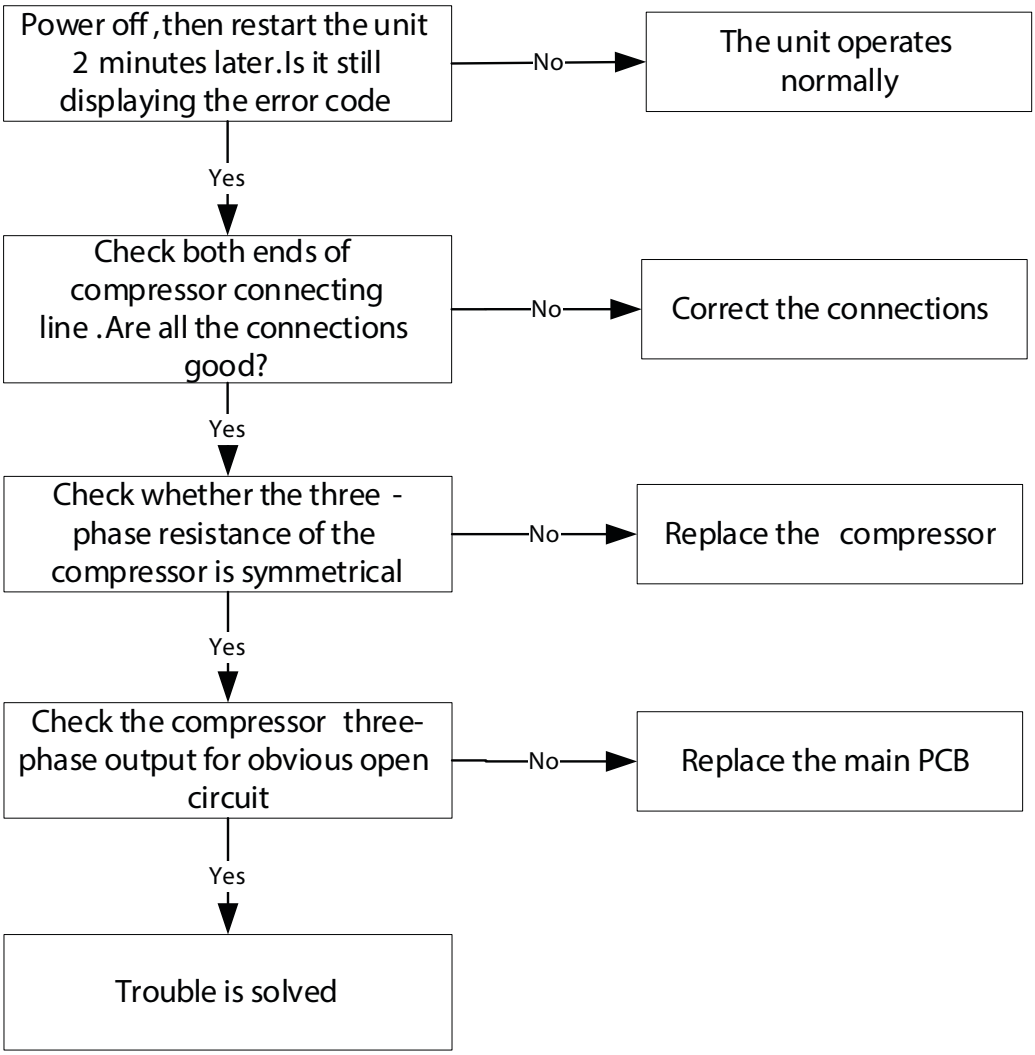

## PC 45 (ODU IR chip drive failure diagnosis and solution)

**Description: When the IR chip detects its own parameter error, the LED displays the failure code when power on.**

**Recommended parts to prepare: Inverter module PCB.**

**Troubleshooting and repair:**

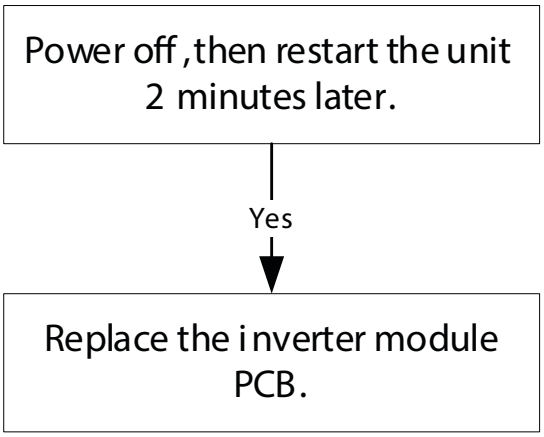

## PC 06 (Discharge temperature protection of compressor diagnosis and solution)

**Description: When the compressor discharge temperature (TP) is more than 115oC for 10 seconds, the compressor ceases operation and does not restart until TP is less than 90$^{o}$C**

**Recommended parts to prepare: Connection wires, Outdoor PCB, Discharge temperature sensor, Refrigerant**

**Troubleshooting and repair:**

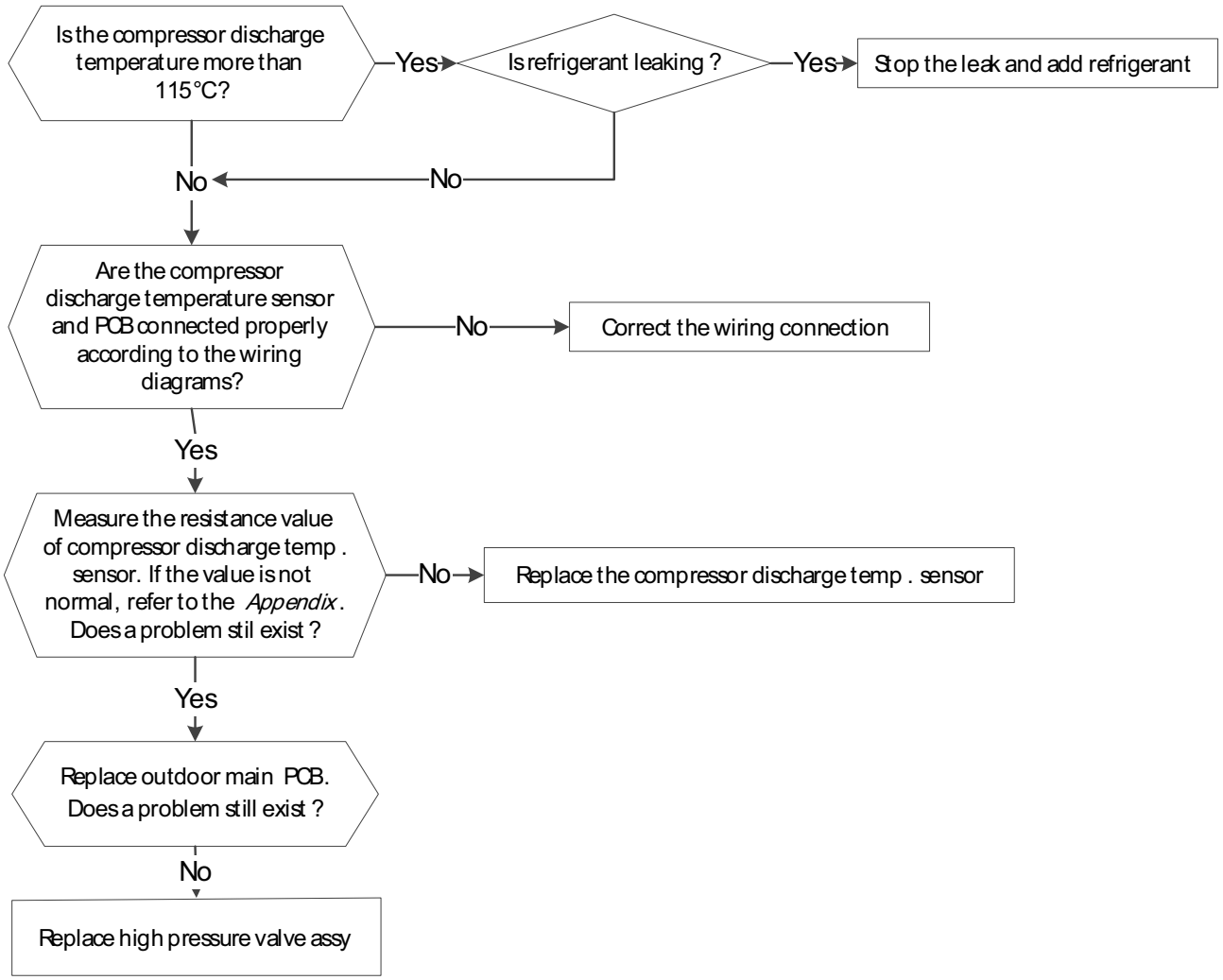

## PC 08 (Current overload protection)/ PC 42 (Compressor start failure of outdoor unit)/ PC 44 (ODU zero speed protection) / PC 46 (Compressor speed has been out of control)/ PC 49 (Compressor overcurrent failure)

**Description: An abnormal current rise is detected by checking the specified current detection circuit.**

**Recommended parts to prepare: Outdoor PCB, Connection wires, Bridge rectifier, PFC circuit or reactor, Refrigeration piping system, Pressure switch, Outdoor fan, PM module board**

**Troubleshooting and repair:**

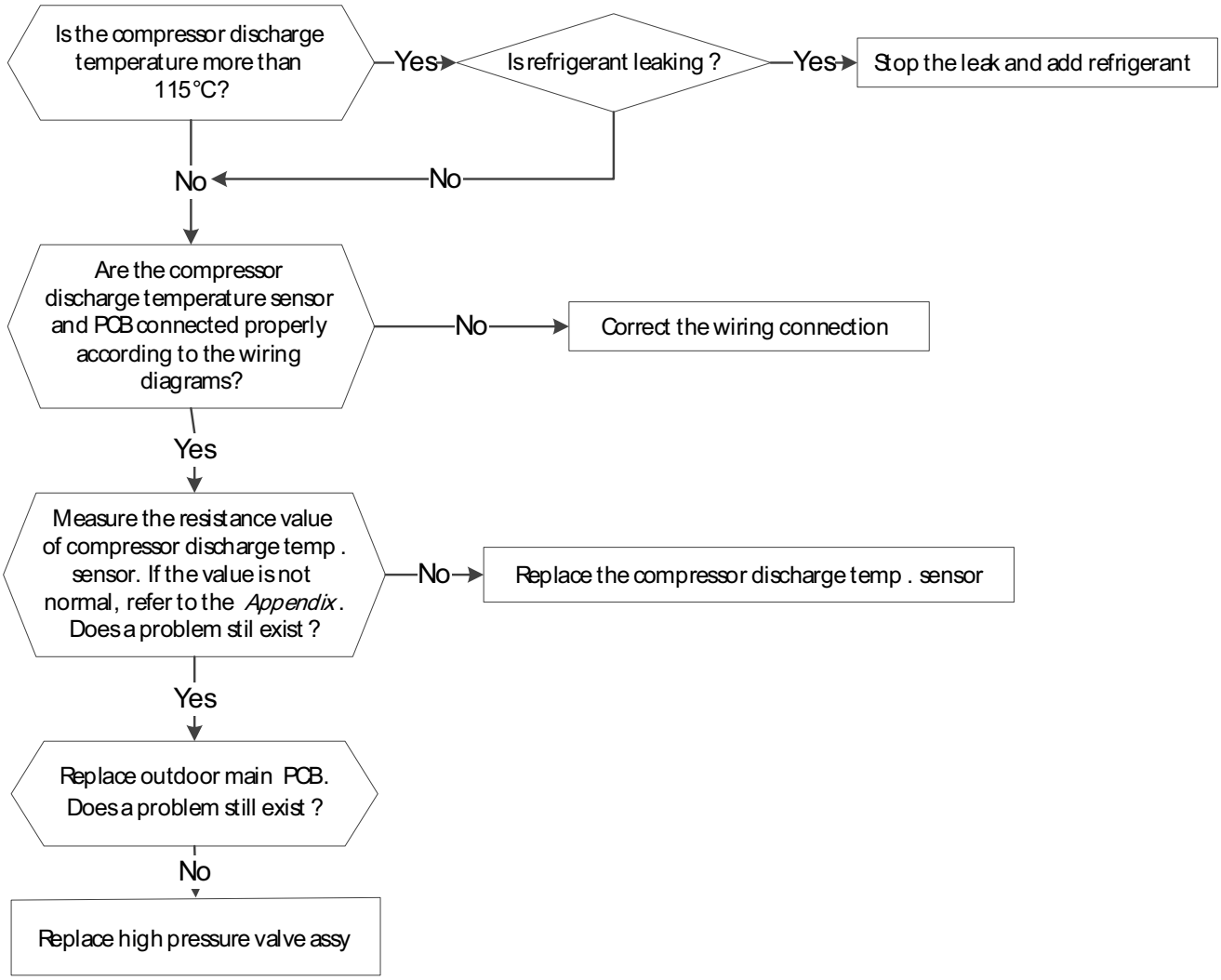

## FH CC/ EH C3 Refrigerant sensor error or Refrigerant sensor is out of range diagnosis and solution

**Description: Indoor unit receives fault signal for 10s or indoor unit does not receive feedback from refrigerant sensor for 150s.**

**Recommended parts to prepare: Connection wires, Sensors, Indoor main PCB**

**Troubleshooting and repair:**

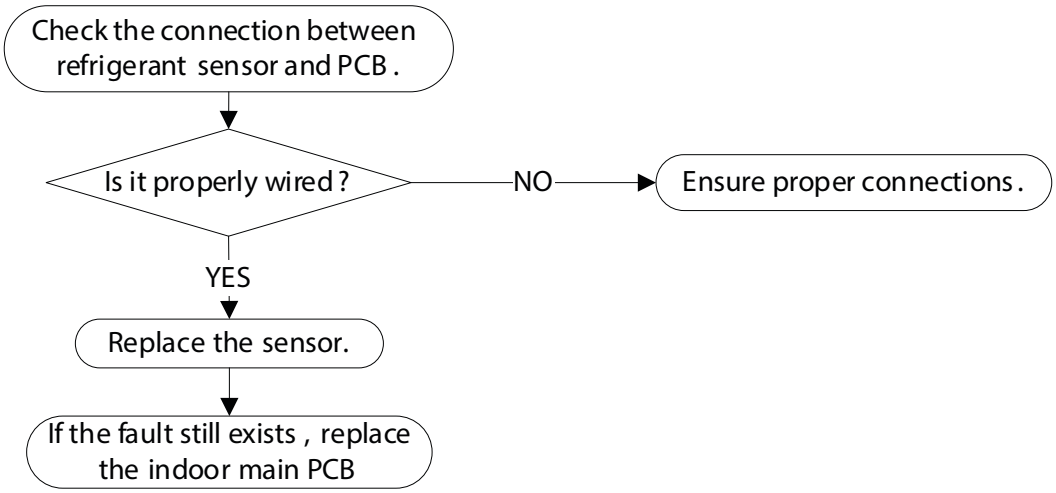


## EH C1/ EH C2/ EC C1 Refrigerant sensor detects leakage or Refrigerant sensor is out of range and leakage is detected diagnosis and solution

**Description:**

The refrigerant sensor detects a concentration higher than or equal to 10%*LFL for 10 seconds or the refrigerant sensor detects a concentration higher than or equal to 20%*LFL or the multi model receives the refrigerant leakage protection fault sent by the outdoor unit.

Multi-zone: Only the buzzer of the indoor unit that detects refrigerant leakage continues to sound the alarm, the shortest sound is 10 seconds, and the longest sound is 5 minutes (you can press any key such as remote control or wire control, APP and so on to eliminate the alarm), and the other non-refrigerant leakage fault indoor unit only displays ECC1, but the buzzer does not sound.

**Recommended parts to prepare: Additional refrigerant**

**Troubleshooting and repair:**

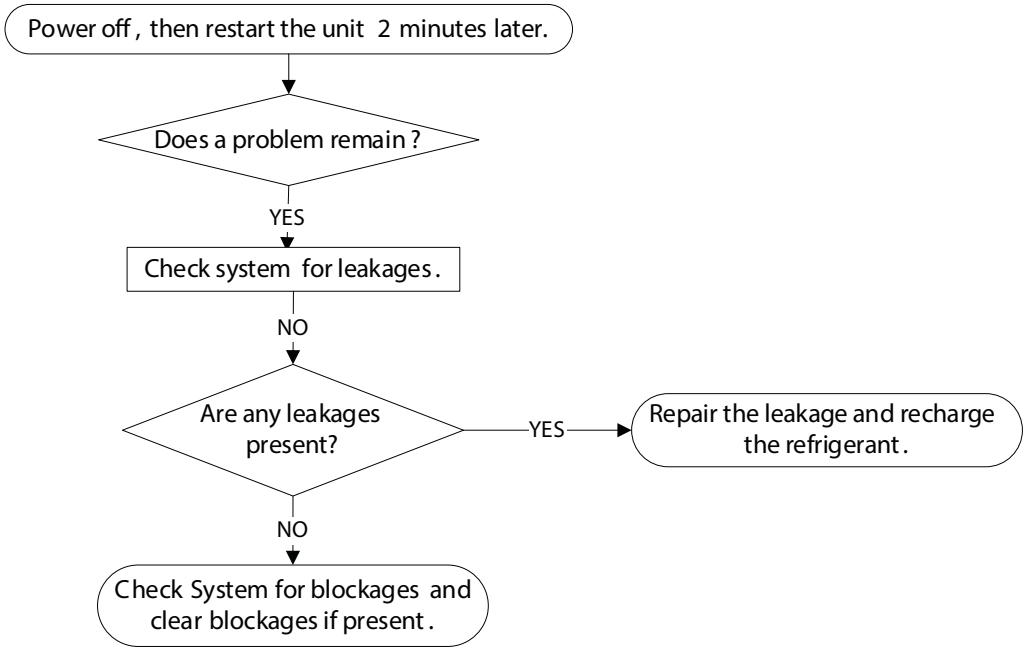

## PC 0A (High temperature protection of condenser diagnosis and solution)

**Description: The unit will stop when condenser temperature is higher than 65°C, and runs again when it is less than 52°C**

**Recommended parts to prepare: Connection wires, Condenser temperature sensor, Outdoor fan, Outdoor main PCB, Refrigerant**

**Troubleshooting and repair:**

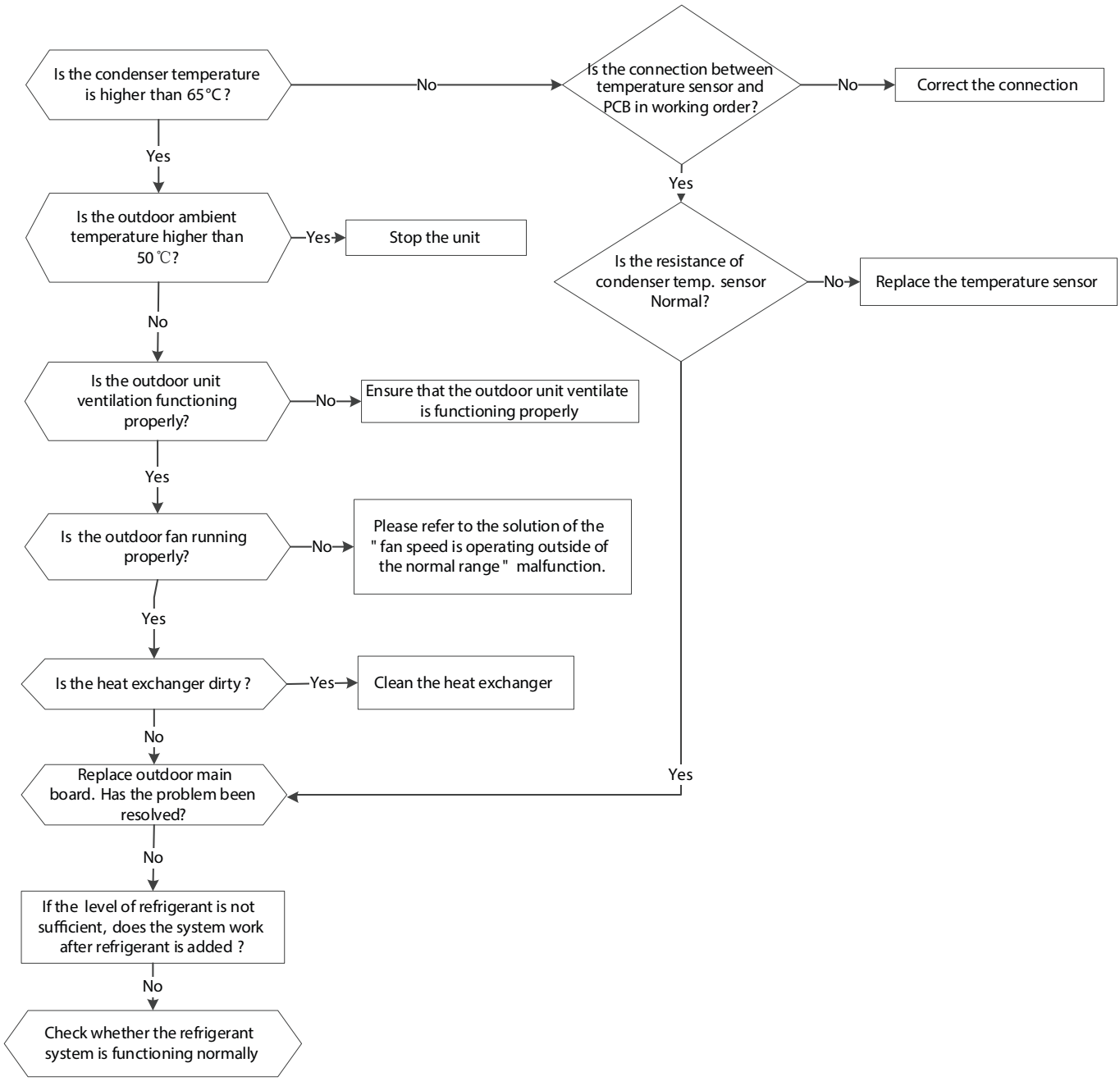

## PC 0F (PFC module protection diagnosis and solution)

**Description: Outdoor PCB detects PFC signal is low voltage or DC voltage is lower than 340V for 6s when quick check.**

**Recommended parts to prepare: Connection wires Outdoor PCB, Inductance, PFC circuit or IPM module board**

**Troubleshooting and repair:**

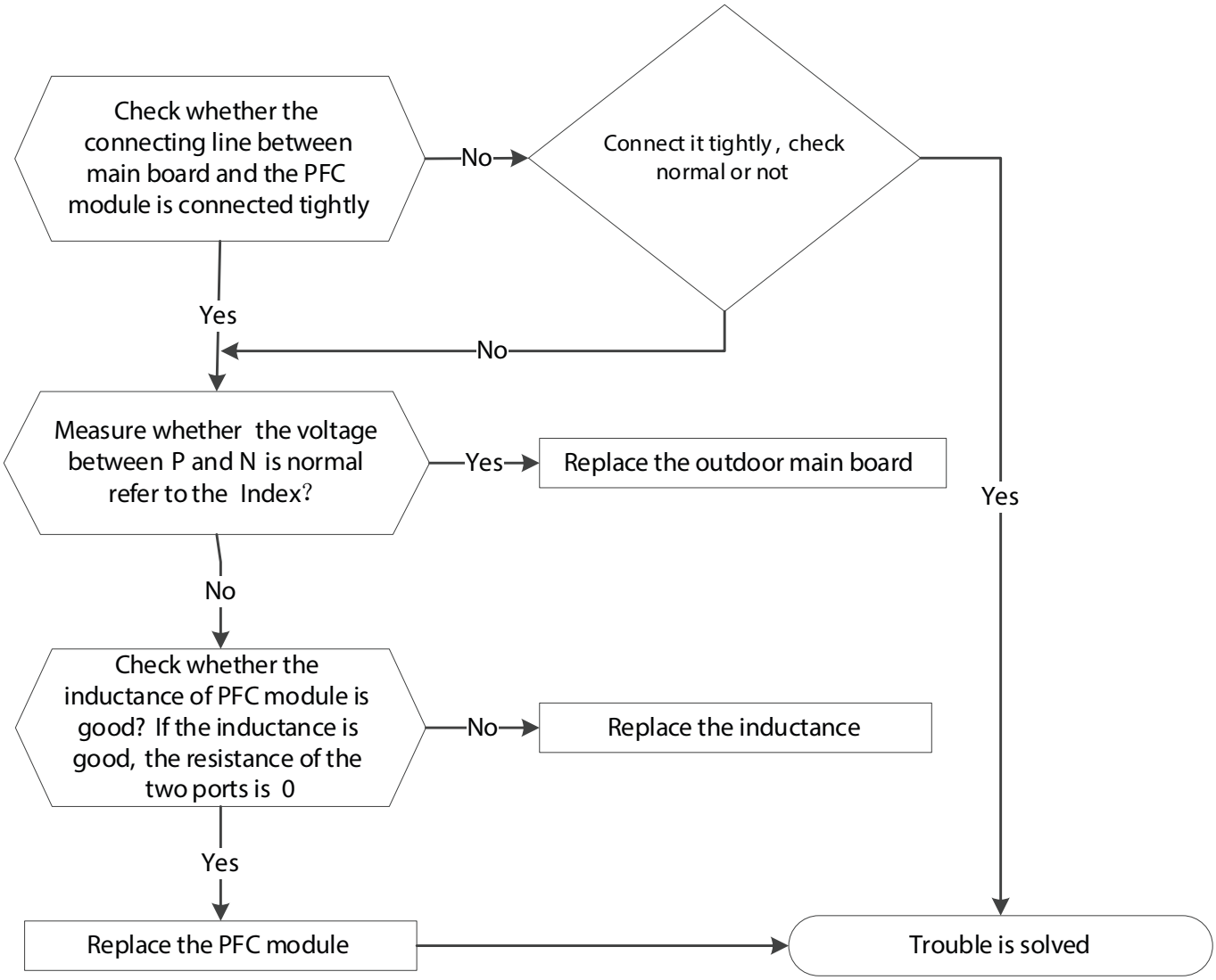

## PC 10 (ODU low AC voltage protection)/ PC 11 (ODU main control board DC bus high voltage protection)/ PC 12 (ODU main control board DC bus high voltage protection /341 MCE error) Diagnosis and Solution

**Description: Abnormal increases or decreases in voltage are detected by checking the specified voltage detection circuit.**

**Recommended parts to prepare: Power supply wires, IPM module board, Outdoor PCB, Bridge rectifier, PFC circuit or reactor**

**Troubleshooting and repair:**

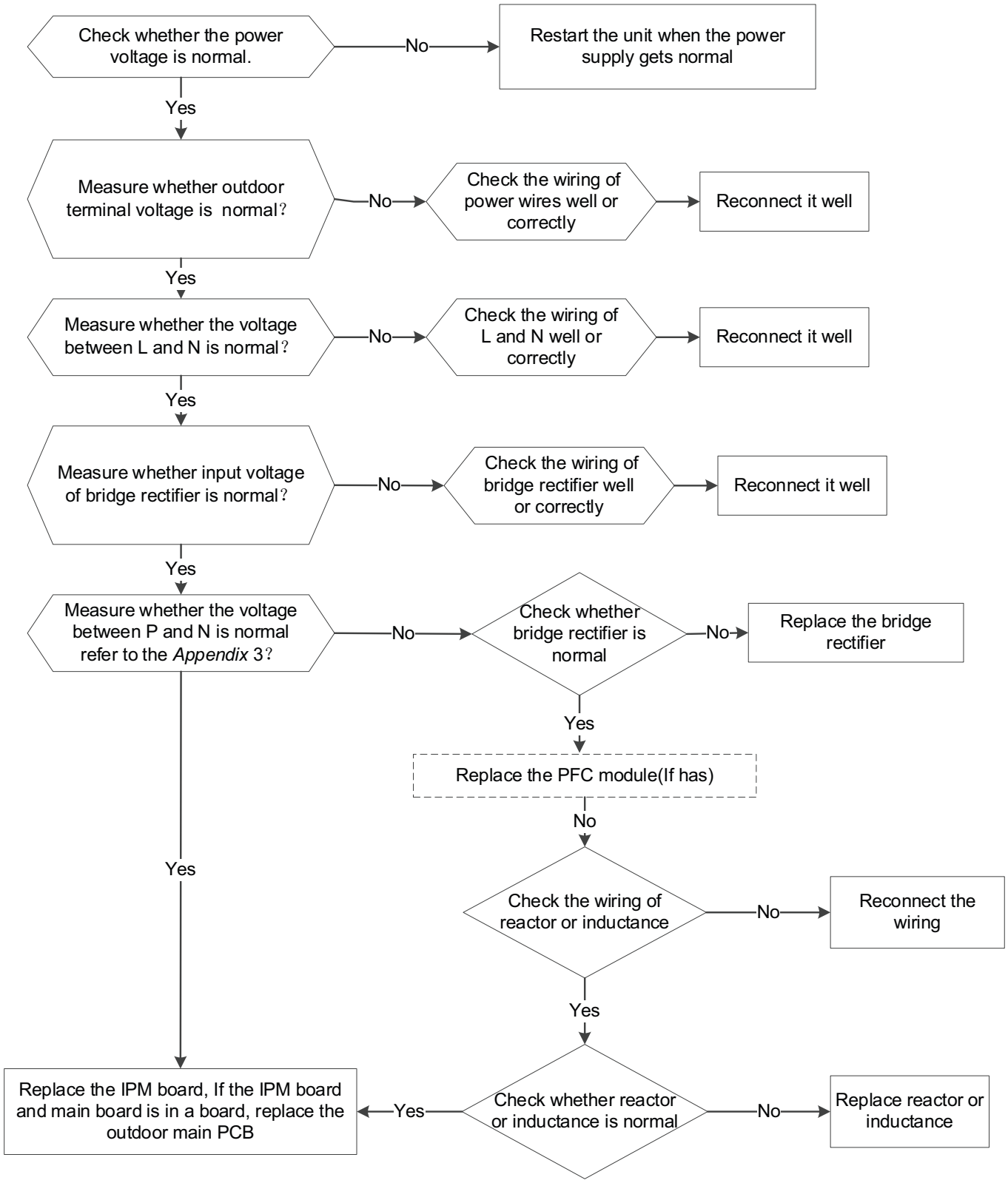

## PC 0L (Low Ambient Temperature Protection)

**Description: It is a protection function. When compressor is off, outdoor ambient temperature(T4) is lower than -35oC. for 10s, the AC will stop and display the failure code.**

When compressor is on, outdoor ambient temperature(T4) is lower than -40oC.for 10s, the AC will stop and display the failure code.

When outdoor ambient temperature(T4) is no lower than -32oC.for 10s, the unit will exit protection

## EH b3 (Communication Malfunction Between Wire and Master Control) Diagnosis and Solution

**Description: If Indoor PCB does not receive feedback from wired controller, the error displays on the wired controller**

**Recommended parts to prepare: Connection wires, Indoor PCB, Wired controller**

**Troubleshooting and repair:**

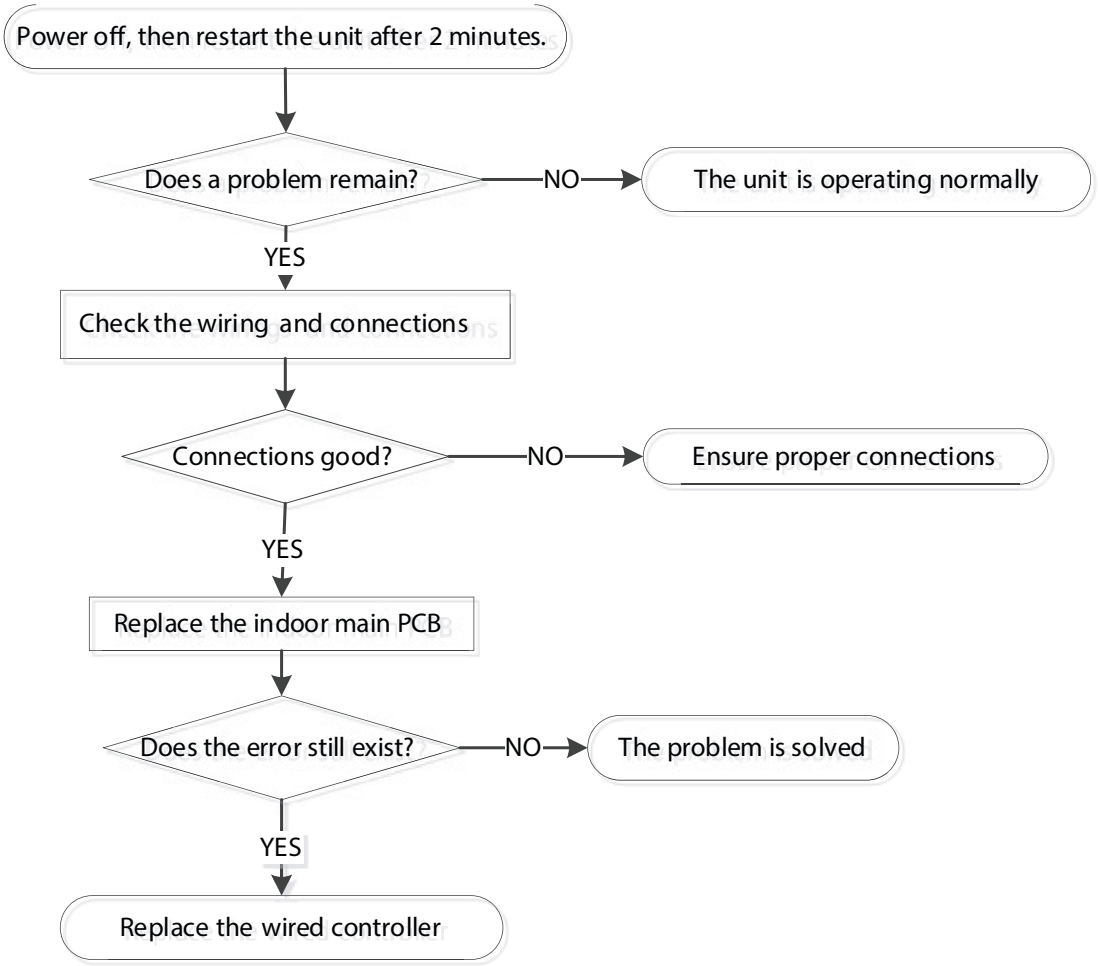

## EH bA (Communication Malfunction Between Indoor Unit and Indoor Fan)/ EH 3A(Indoor Fan DC Bus Voltage Is Too Low Protection)/ EH 3b (Indoor Fan DC Bus Voltage is Too High) Fault) Diagnosis and Solution

**Description: Indoor unit does not receive the feedback from external fan module during 150 seconds. or Indoor unit receives abnormal increases or decreases in voltage from indoor fan.**

**Recommended parts to prepare: Indoor main PCB**

**Troubleshooting and repair:**

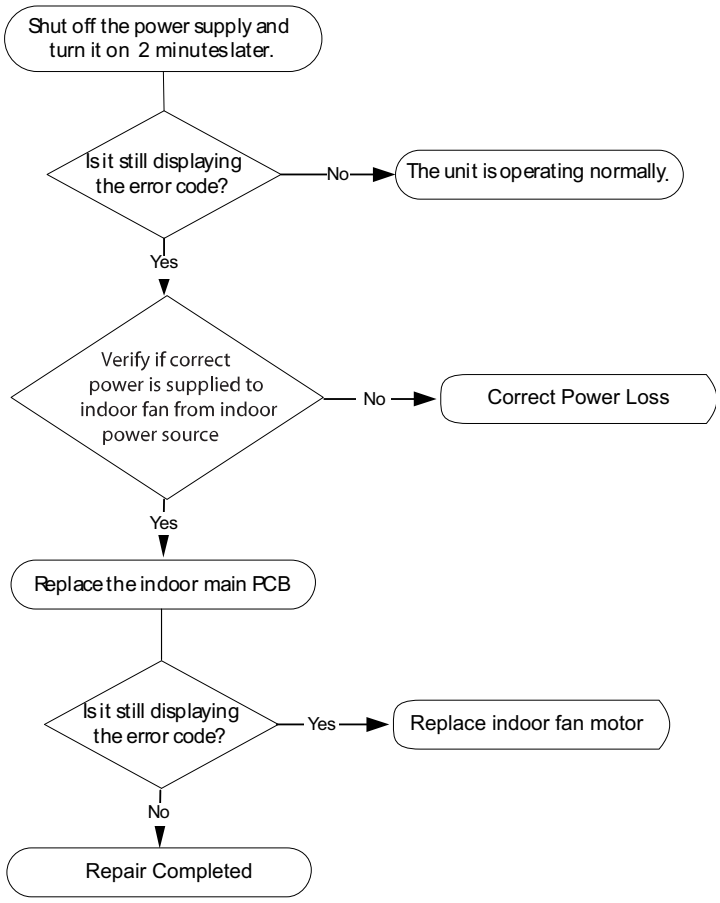


## FH CC (Refrigerant Sensor Error) or EH C3(Refrigerant Sensor is Out of Range) Diagnosis and Solution

**Description: Indoor unit receives fault signal for 10s or indoor unit does not receive feedback from refrigerant sensor for 150s.**

**Recommended parts to prepare: Connection wires, Sensors, Indoor main PCB**

**Troubleshooting and repair:**

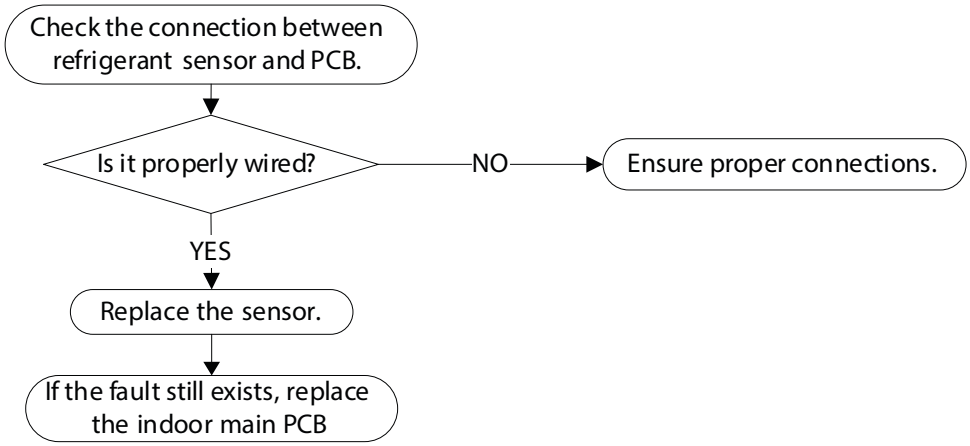

## EH C1 (Refrigerant Sensor Detects Leakage), PC02 (ODU Error Code to Indicate Leak Detection at IDU) or EH C2 (Refrigerant Sensor is Out of Range and Leakage is Detected) Diagnosis and Solution

**Description: The refrigerant sensor detects a concentration higher than or equal to 10%*LFL for 10 seconds or the refrigerant sensor detects a concentration higher than or equal to 20%*LFL or the multi model receives the refrigerant leakage protection fault sent by the outdoor unit.**

**Multi-zone: Only the buzzer of the indoor unit that detects refrigerant leakage continues to sound the alarm, the shortest sound is 10 seconds, and the longest sound is 5 minutes (you can press any key such as remote control or wire control, APP and so on to eliminate the alarm), and the other non-refrigerant leakage fault indoor unit only displays "ECC1", but the buzzer does not sound.**

**Recommended parts to prepare: Additional refrigerant**

**Troubleshooting and repair:**

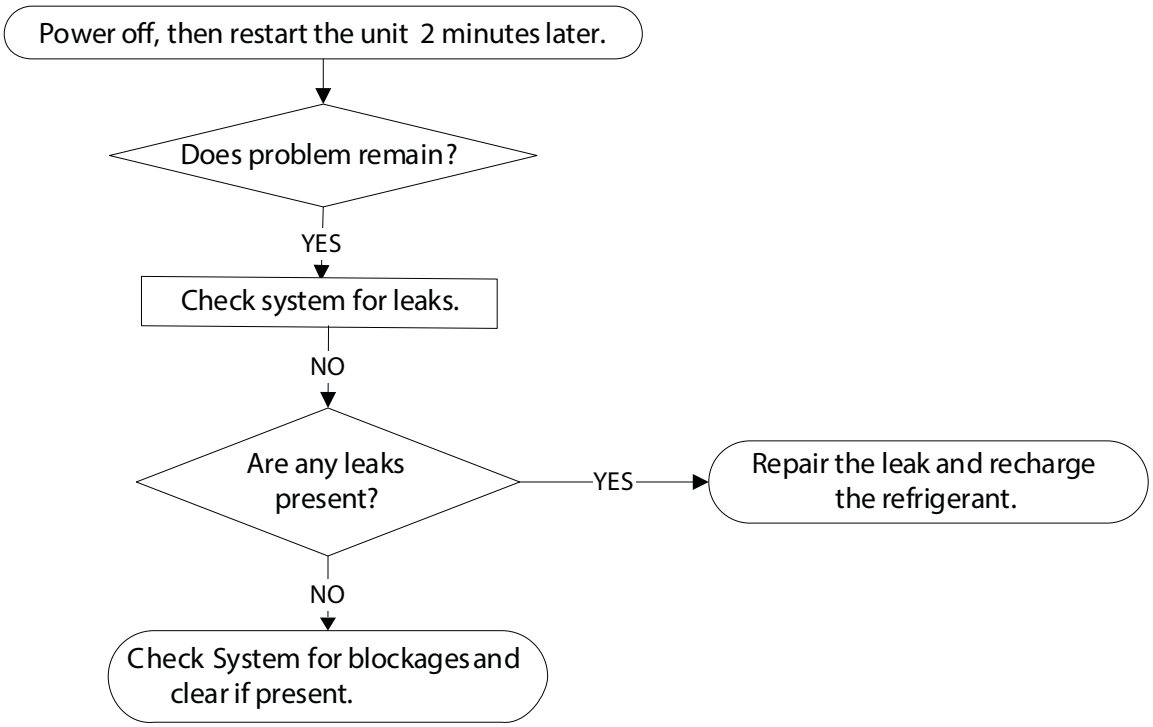


## EC 0d (ODU Malfunction Diagnosis and Solution)

**Description: The indoor unit detects the outdoor unit in error.**

**Recommended parts to prepare: Outdoor unit**

**Troubleshooting and repair:**

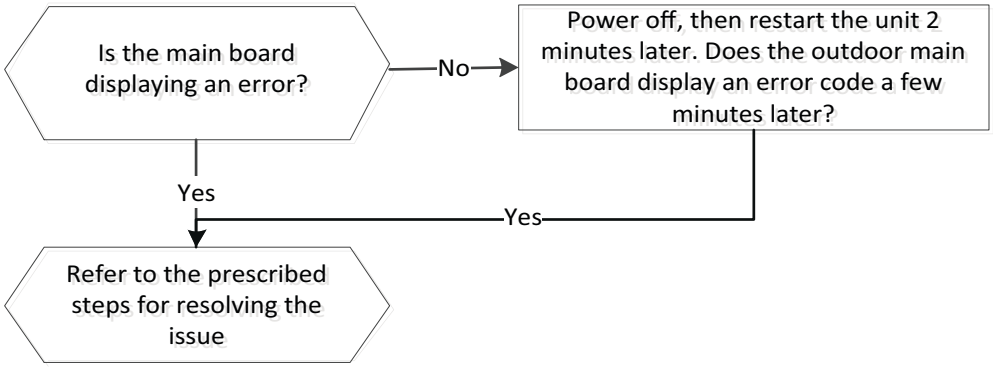

## EH 06 (IDU Main Control Board and Display Board Communication Error Diagnosis and Solution)

**Description: Indoor PCB does not receive feedback from the display board.**

**Recommended parts to prepare: Communication wire, Indoor PCB, Display board**

**Troubleshooting and repair:**

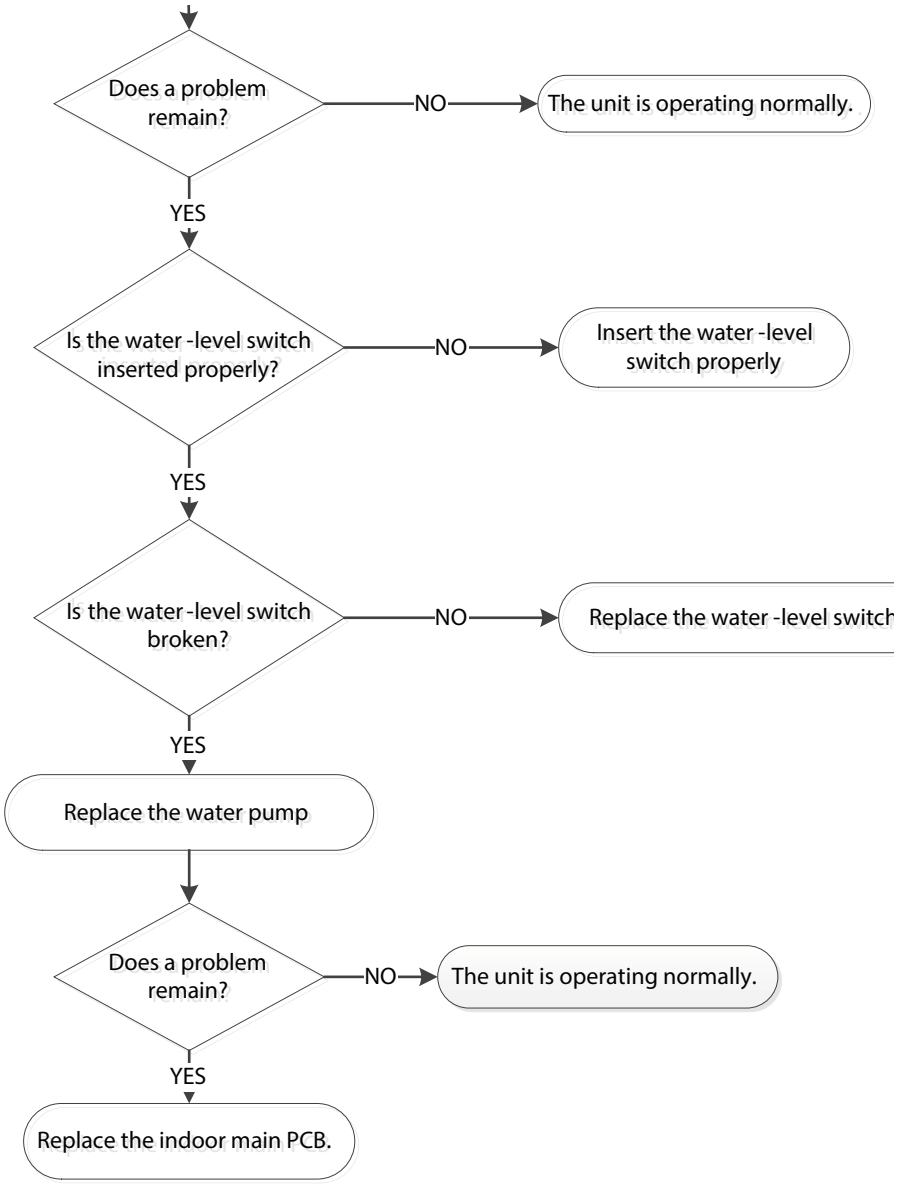

## EL 16 (Communication Malfunction Between Adapter Board and Outdoor Main Board Diagnosis and Solution)

**Description: The adapter PCB cannot detect the main control board.**

**Recommended parts to prepare: Connection wires, Adapter board, Outdoor main PCB**

**Troubleshooting and repair:**

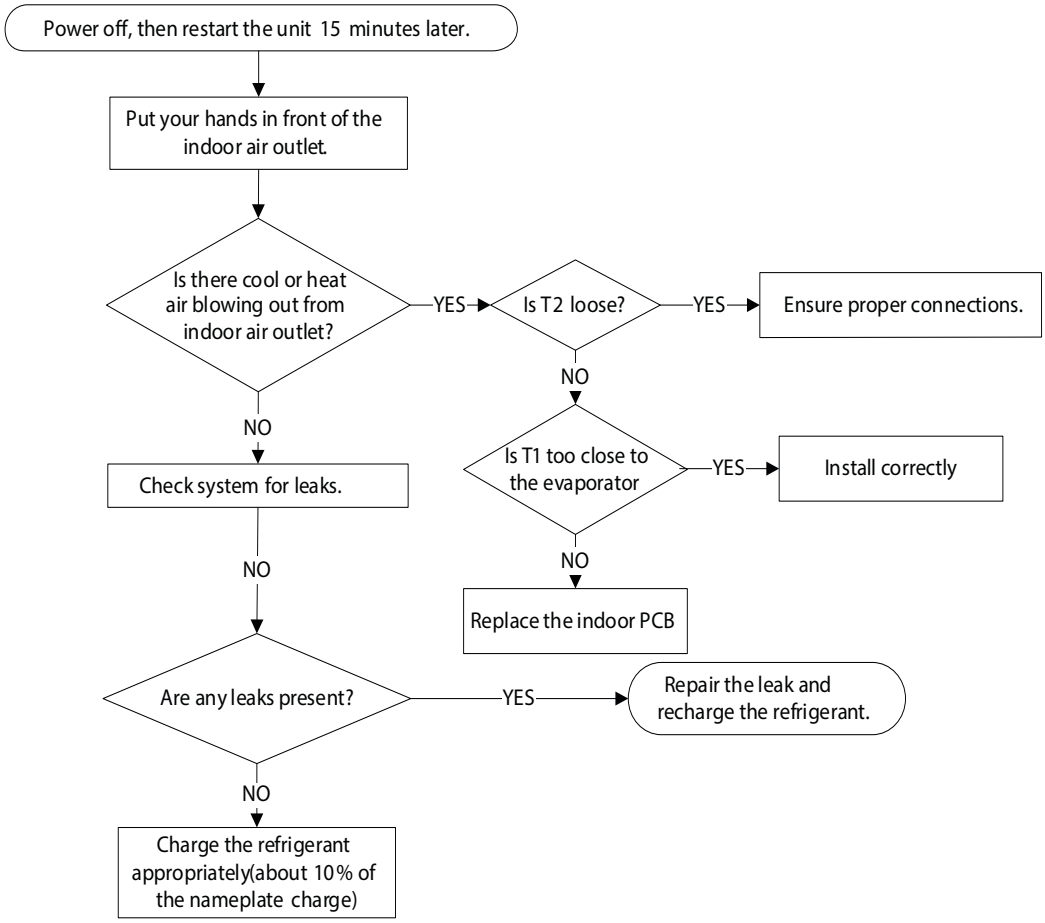


## FL 09 (Mismatch between the new and old platforms diagnosis and solution)

**Description: Indoor and outdoor units are mismatched, the LED displays this code. Please replace the matching indoor or outdoor unit.**

## PH 90 (High temperature protection of evaporator diagnosis and solution)

**Description: When evaporator coil temperature is more than 60°C in heating mode, the unit stops. It starts again only when the evaporator coil temperature is less than 52°C.**

**Recommended parts to prepare: Connection wires, Evaporator coil temperature sensor (T2), Indoor fan, Indoor main PCB**

**Troubleshooting and repair:**

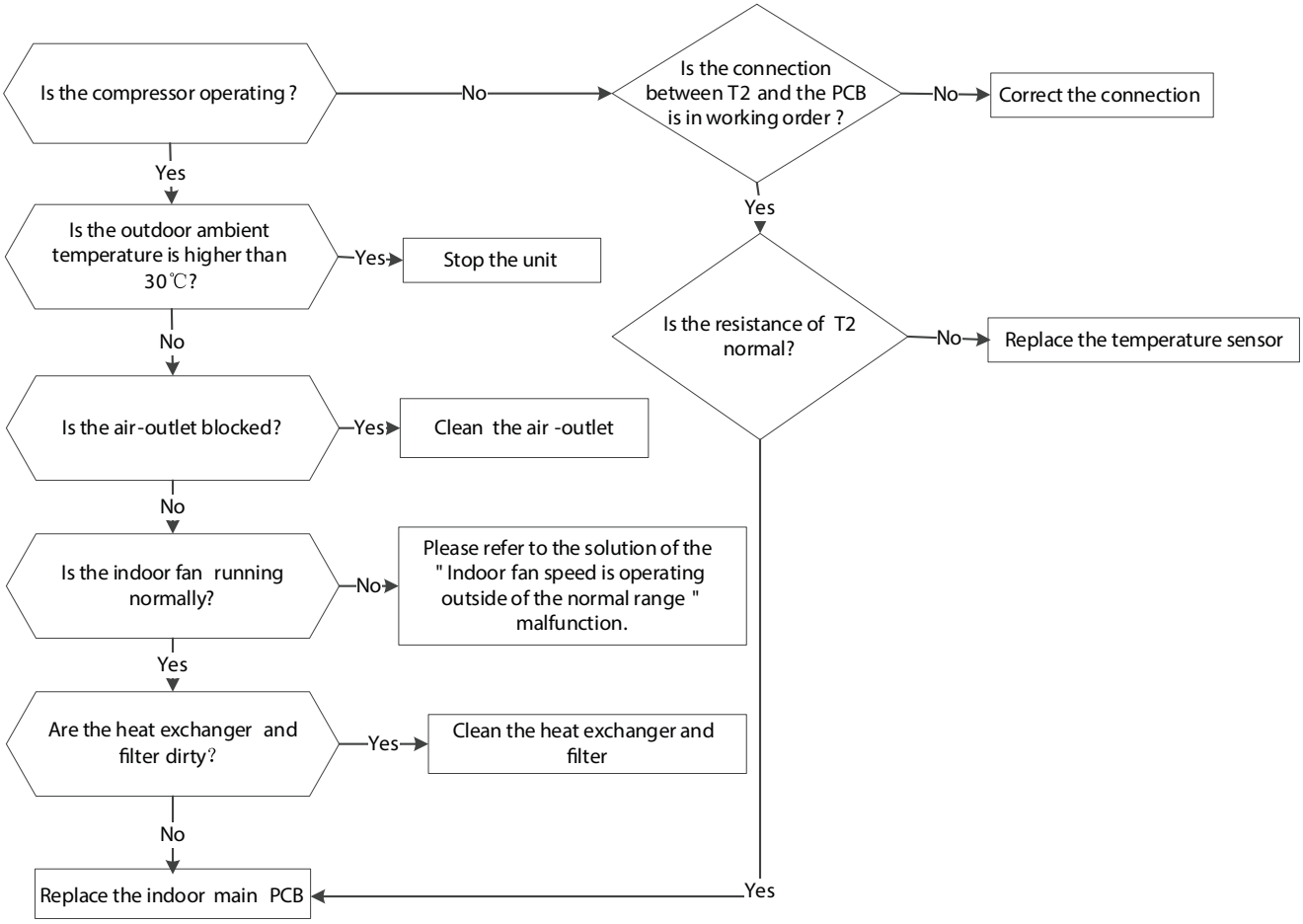

## PH 91 (Low temperature protection of evaporator diagnosis and solution)

**Description: When evaporator coil temperature is lower than 0°C in cooling mode or drying mode, the unit stops. It starts again only when the evaporator coil temperature is more than 5°C.**

**Recommended parts to prepare: Connection wires, Evaporator coil temperature sensor (T2), Indoor main PCB**

**Troubleshooting and repair:**

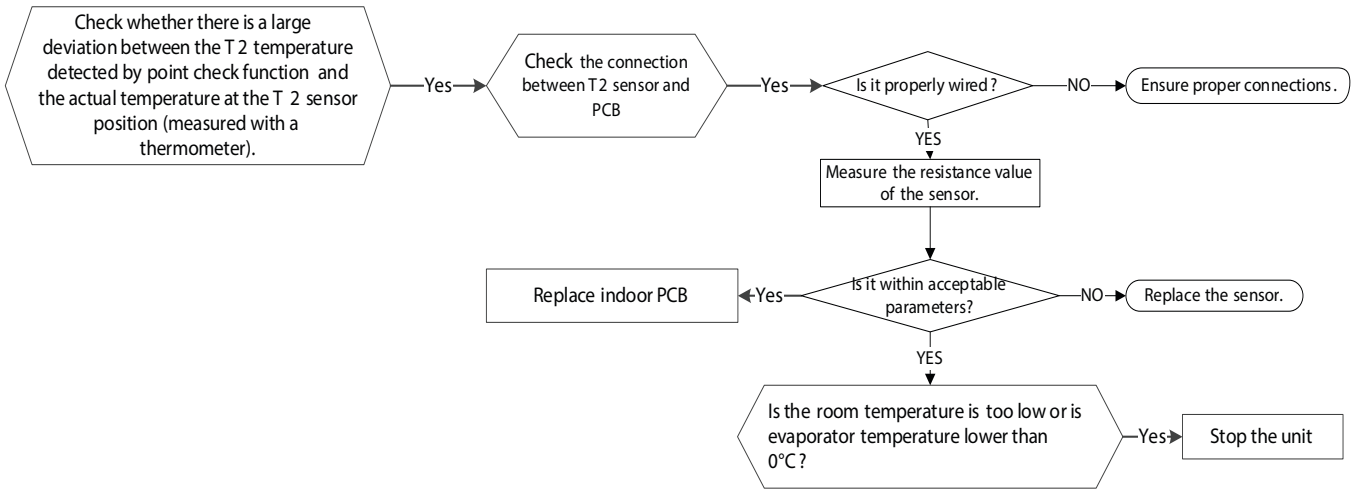

# CHECK PROCEDURES

## Temperature Sensor Check

**⚠ WARNING**

**ELECTRICAL SHOCK HAZARD**

Be sure to turn off all power supplies or disconnect all wires to avoid electric shock. Operate after compressor and coil have returned to normal temperature in case of injury.

1. Disconnect the temperature sensor from the PCB.
2. Measure the sensor's resistance value with a multi-meter.
3. Check the corresponding temperature sensor resistance value table (see "Temperature Sensor Resistance Value Table for TP (°C - K)" on page 91 and "Other Temperature Sensors Resistance Value Table (°C - K)" on page 92).

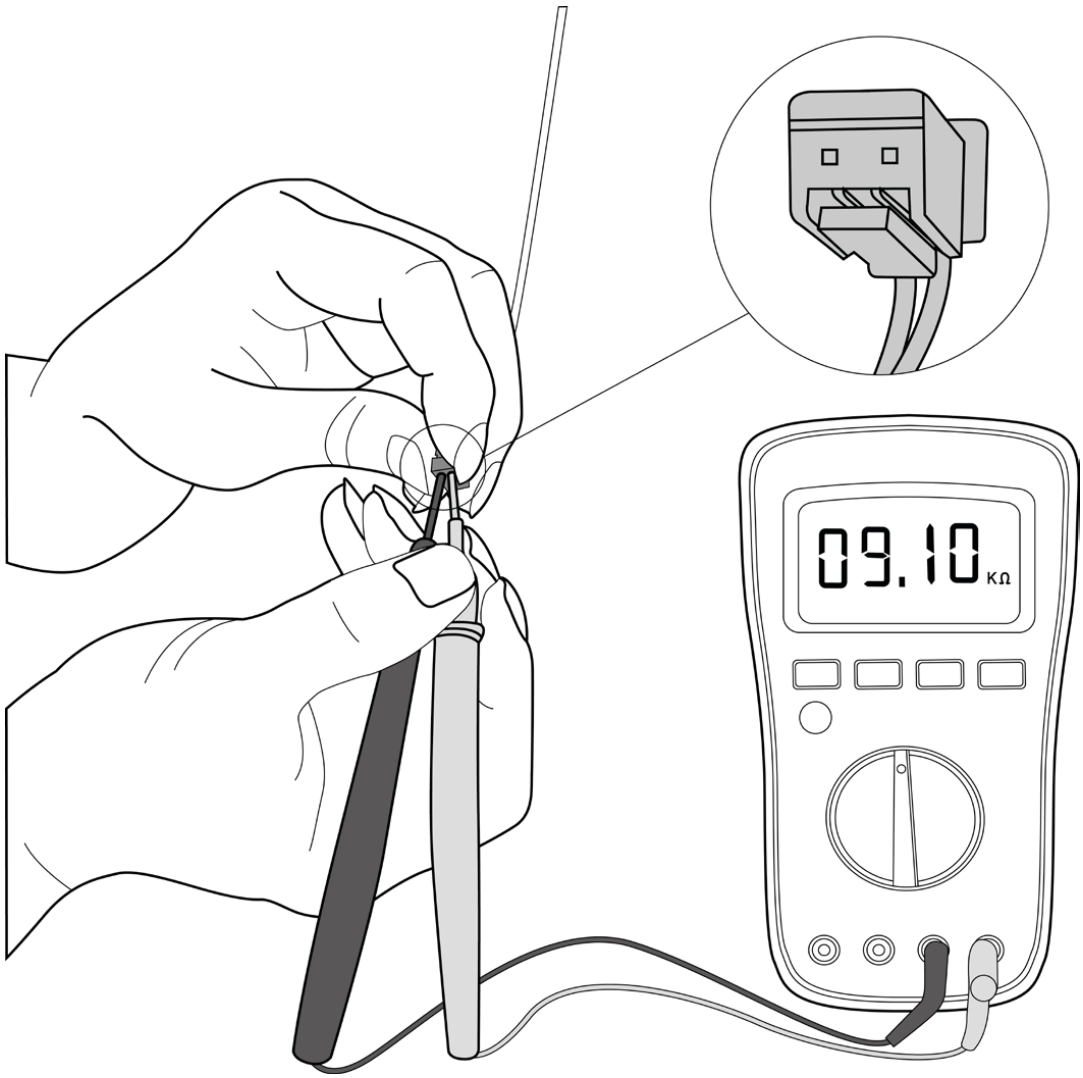


**Fig. 33 —Measure the Sensor's Resistance Value**

## Compressor Check

1. Disconnect the compressor power cord from the outdoor PCB.
2. Measure the resistance value of each winding using a multi-meter.
3. Check the resistance value of each winding in tables 9 through 12:

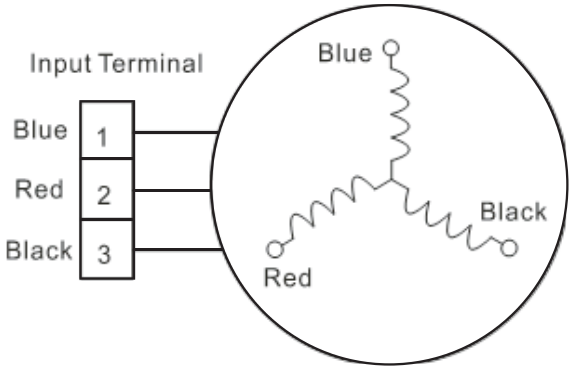


**Fig. 34 —Compressor Check**

**Table 4 – Resistance Values**

| Resistance Value | KSN140D58UFZ | KTF250D22UMT | KTM240D46UKT2 | KTF310D43UMT | MTH550UKPC8FU |
|---|---|---|---|---|---|
| Blue-Red | 1.86Ω | 0.75Ω | 1.04Ω | 0.65Ω | 0.295Ω |
| Blue-Black | | | | | |
| Red-Black | | | | | |

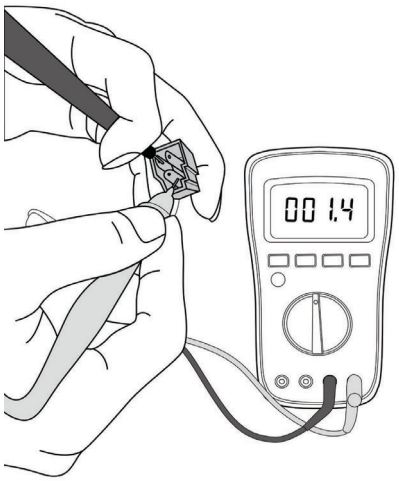


**Fig. 35 —Resistance Check**

**NOTE:** The picture and the value are only for reference, actual condition and specific value may vary.

## IPM Continuity Check

**WARNING**

**ELECTRICAL SHOCK HAZARD**

Electricity remains in capacitors even when the power supply is off. Ensure the capacitors are fully discharged before troubleshooting.

1. Turn off outdoor unit and disconnect power supply.
2. Discharge electrolytic capacitors and ensure all energy-storage unit has been discharged.
3. Disassemble outdoor PCB or disassemble IPM board.
4. Measure the resistance value between P and U(V, W, N); U(V, W) and N.

**Table 5 – Resistance Value**

| Digital Tester | | Resistance Value | Digital Tester | | Resistance Value |
|---|---|---|---|---|---|
| (+) Red | (-) Black | | (+) Red | (-) Black | |
| P | N | ∞ (Several MƒÇ) | U | N | ∞ (Several MƒÇ) |
| | U | | V | | |
| | V | | W | | |
| | W | | - | | |

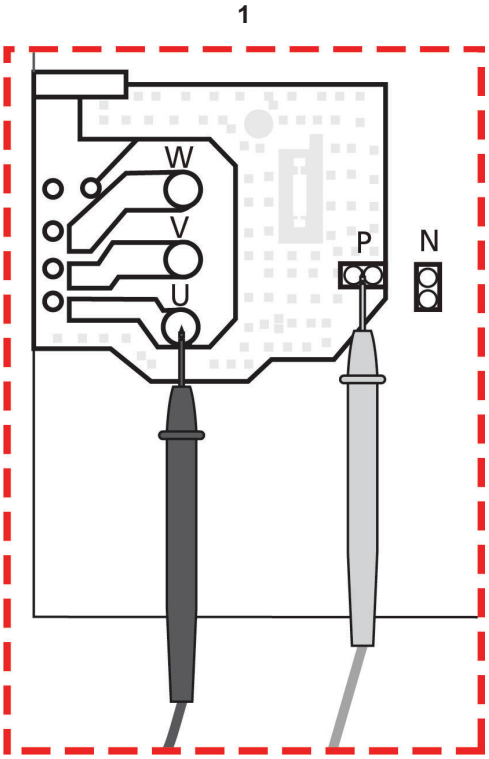


**Fig. 36 —Resistance Value**

**Table 6 – Voltage Range**

| 208-240V (1-phase) | | |
|---|---|---|
| **In Standby** | | |
| **Around 310VDC** | | |
| **In Operation** | | |
| With passive PFC module | With partial active PFC module | With fully active PFC module |
| >200VDC | >310VDC | >370VDC |

## 4-Way Valve Check

1. Power on, use a digital tester to measure the voltage, when the unit operates in cooling, it is 0V. When the unit operates in heating, it is about equal to power supply voltage.
   If the value of the voltage is not in the range, the PCB must have problems and need to be replaced.

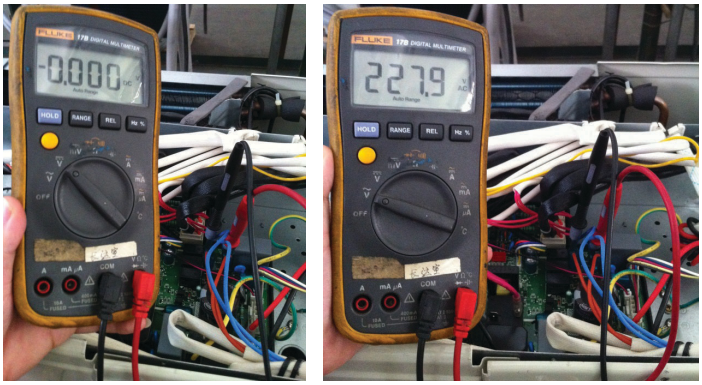


**Fig. 37 —Measure the Voltage**

2. Turn off the power, use a digital tester to measure the resistance. The value should be 1.8~2.5 KΩ.

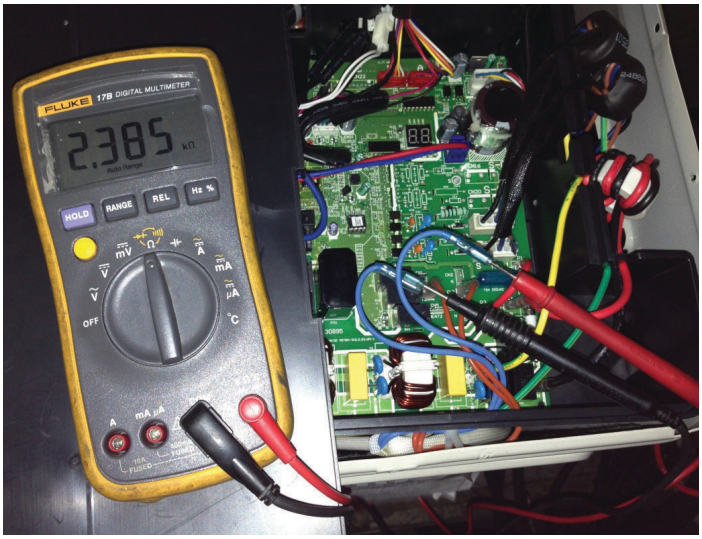


**Fig. 38 —Use a Digital Tester to Measure Resistance**

## EXV Check

**⚠ WARNING**

**ELECTRICAL SHOCK HAZARD**
**Electricity remains in the capacitors even when the power is off.**
**Ensure the capacitors are fully discharged before troubleshooting.**

1. Turn off outdoor unit and disconnect power supply.
2. Disconnect the connectors of EXV.
3. Measure the resistance value between Red and Blue (Yellow); Brown and Orange (White).

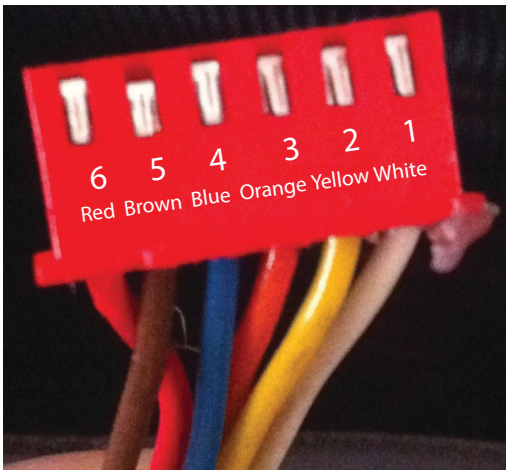


**Fig. 39 —EXV Check**

***Resistance to EXV coil***

| Color of Lead Wire | Normal Value |
|---|---|
| Redd-Blue | About 500 Ω |
| Red-Yellow | |
| Brown-Orange | |
| Brown-White | |

## Main Parts Check

1. Temperature sensor checking
   Disconnect the temperature sensor from PCB, measure the resistance value with a tester.

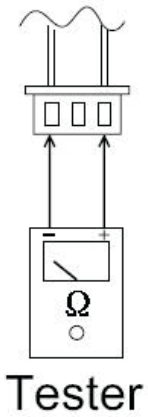


**Fig. 40 —Sensor Test**

2. Temperature sensors
   a. Room temp. (T1) sensor,
   b. Indoor coil temp. (T2) sensor,
   c. Outdoor coil temp. (T3) sensor,
   d. Outdoor ambient temp. (T4) sensor,
   e. Compressor discharge temp. (T5) sensor.
   f. Measure the resistance value of each winding by using the multi-meter.

# DISASSEMBLY INSTRUCTIONS

## 18K/24K Unit Disassembly - Panel Plate

| PROCEDURES | ILLUSTRATION |
|---|---|
| 1. Turn off the air conditioner and the power breaker<br>2. Remove the screw of the big handle and then remove the big handle (3 screws) (see illustration) | 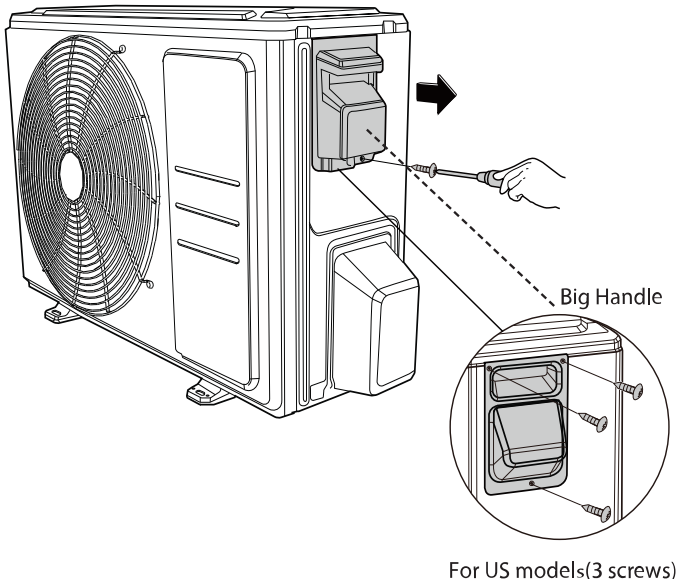 |
| 3. Remove the screws of the top cover and then remove the top cover (3 screws). One of the screws is located underneath the big handle (see illustration). | 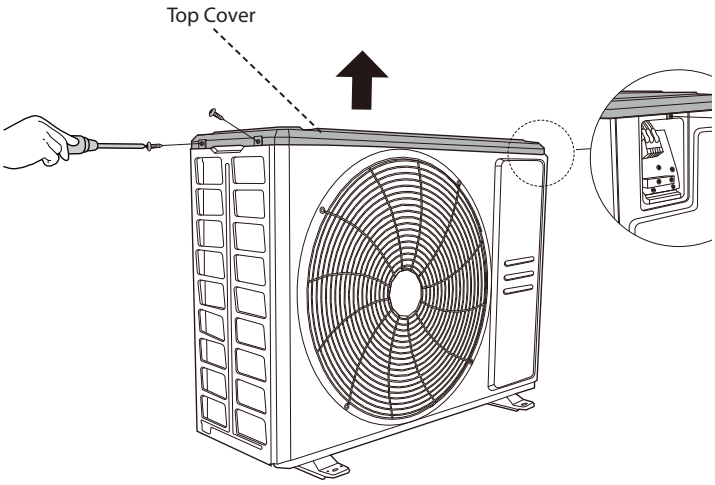 |

| PROCEDURES | ILLUSTRATION |
|---|---|
| 4. Remove the screws of water collecting cover and then remove the water collecting cover (2 screws).(see illustration) | 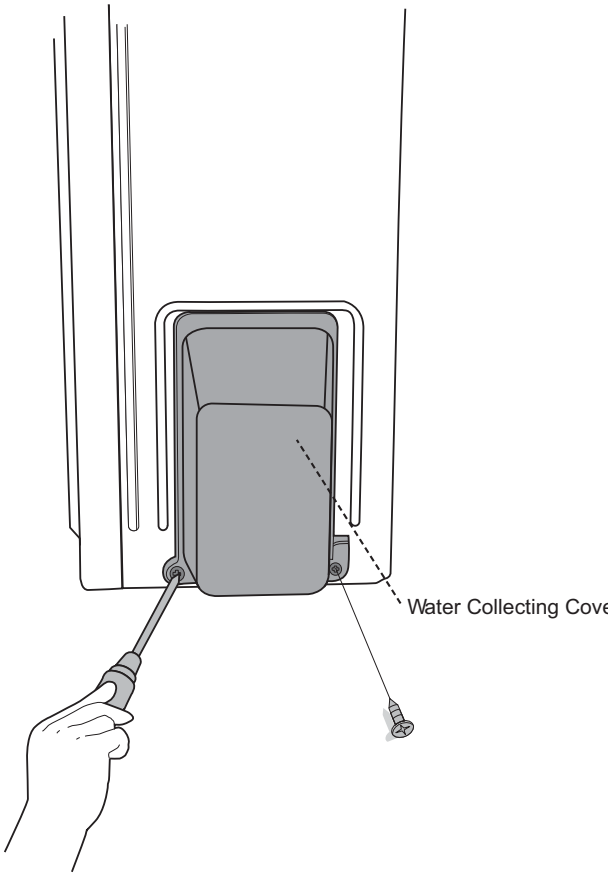 |
| 5. Remove the screws of the front panel and then remove the front panel (7 screws (on/off models) or 9 screws. (inverter models). (see illustration) | 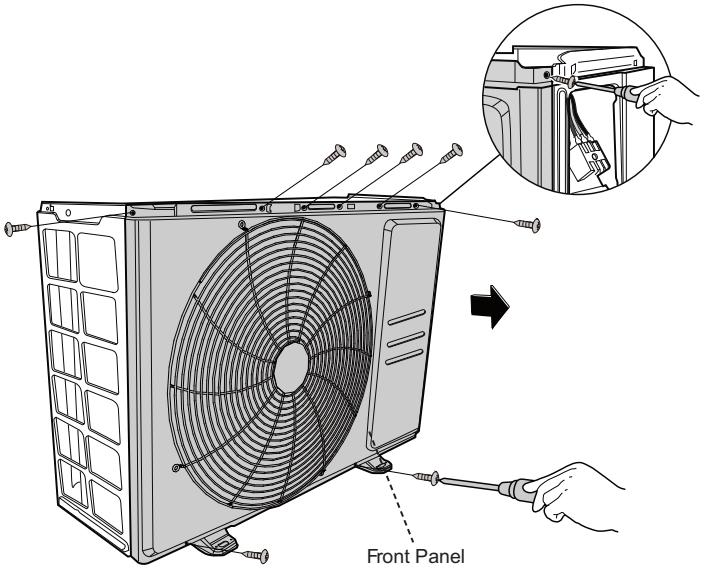 |

| PROCEDURES | ILLUSTRATION |
|---|---|
| 6. Remove the screws of the right panel and then remove the right panel (6 screws) (see illustration) | 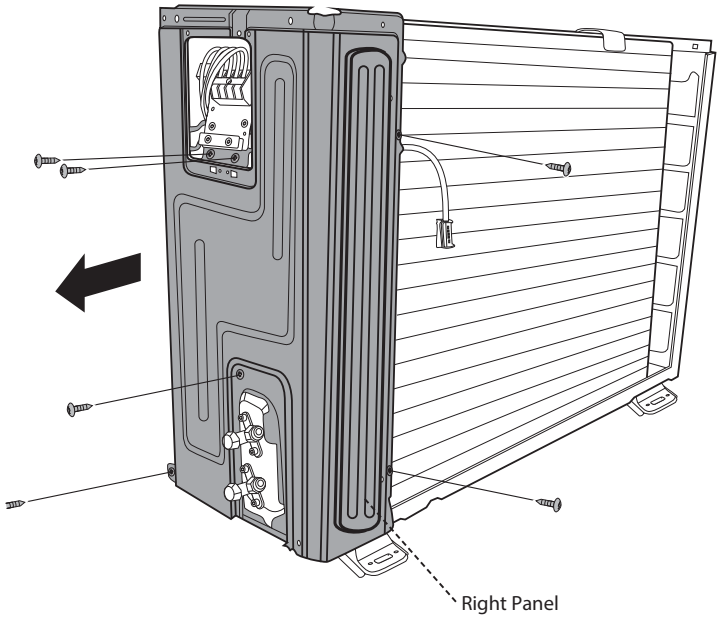 |

## 30K Unit Disassembly - Panel Plate

| PROCEDURES | ILLUSTRATION |
|---|---|
| 1. Turn off the air conditioner and the power breaker<br>2. Remove the screws of the big handle and then remove the big handle (2 screws) (see illustration) | 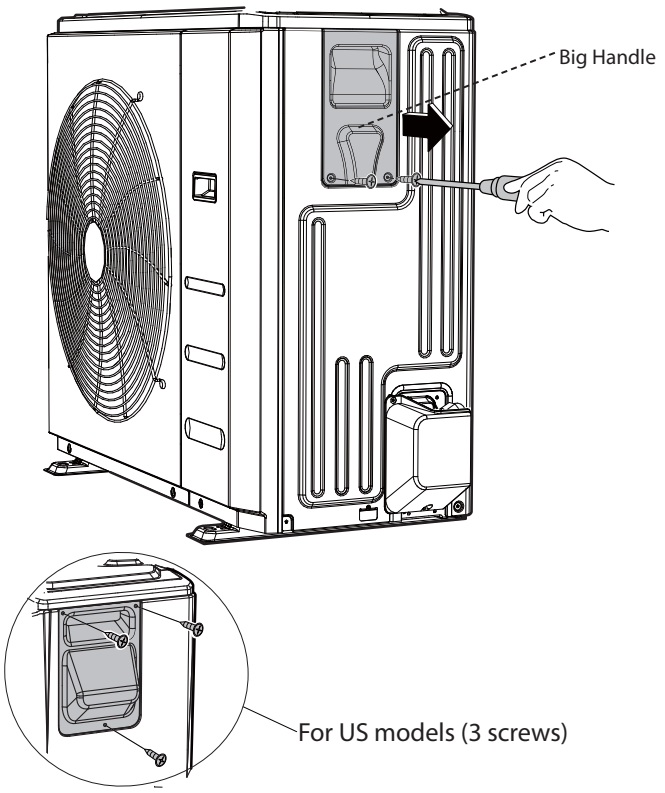 |
| 3. Remove the screws of the top cover and then remove the top cover (4 screws). Two of the screws are located underneath the big handle. (see illustration) | 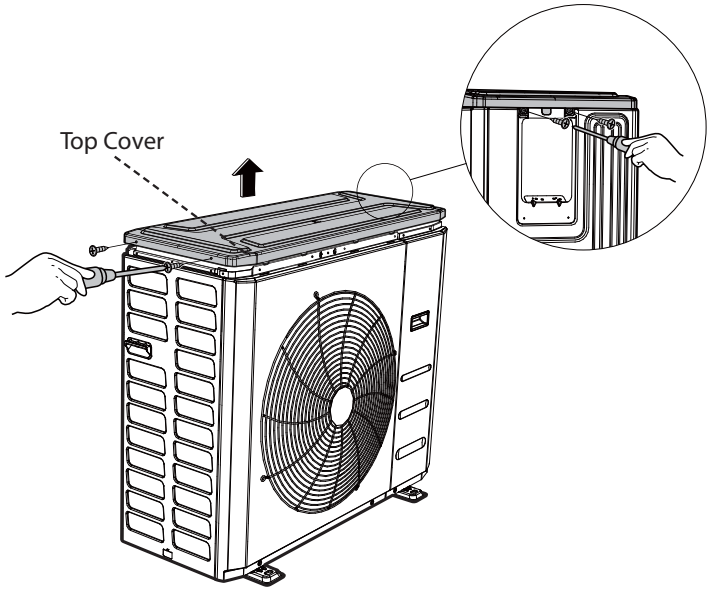 |

| PROCEDURES | ILLUSTRATION |
|---|---|
| 4. Remove the screws of the front right panel and then remove the front right panel (2 screws) (see illustration) | 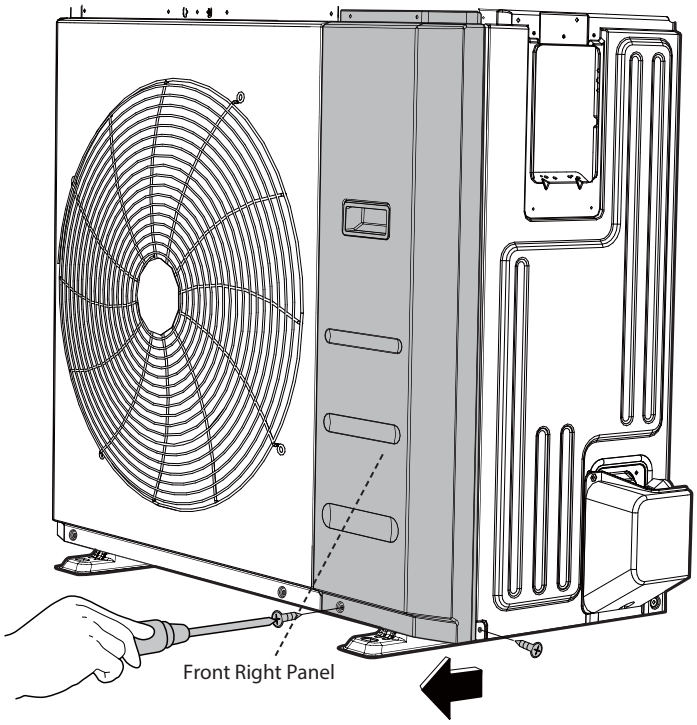 |
| 5. Remove the screws of the front panel and then remove the front panel (9 screws) (see illustration) | 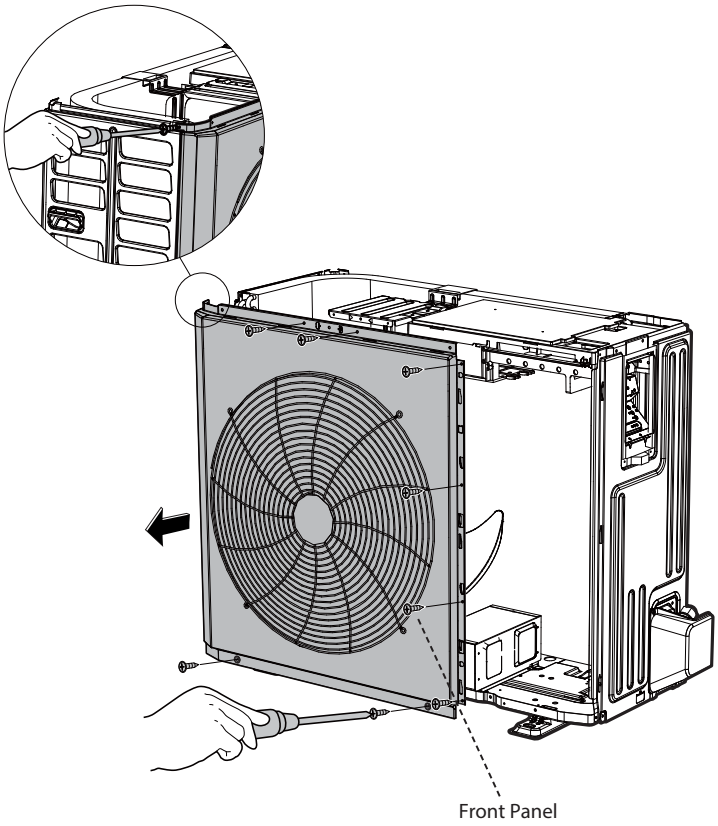 |

| PROCEDURES | ILLUSTRATION |
|---|---|
| 6. Remove the screws of the right panel and then remove the right panel (5 screws) (see illustration) | 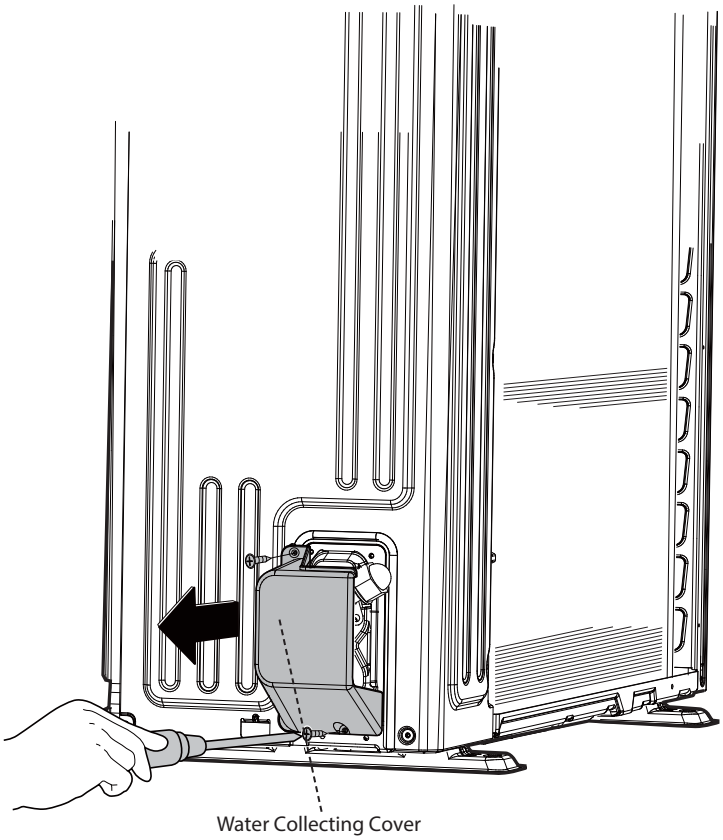 |
| 7. Remove the screws of the rear net and then remove the rear net (3 screws) (see illustration) | 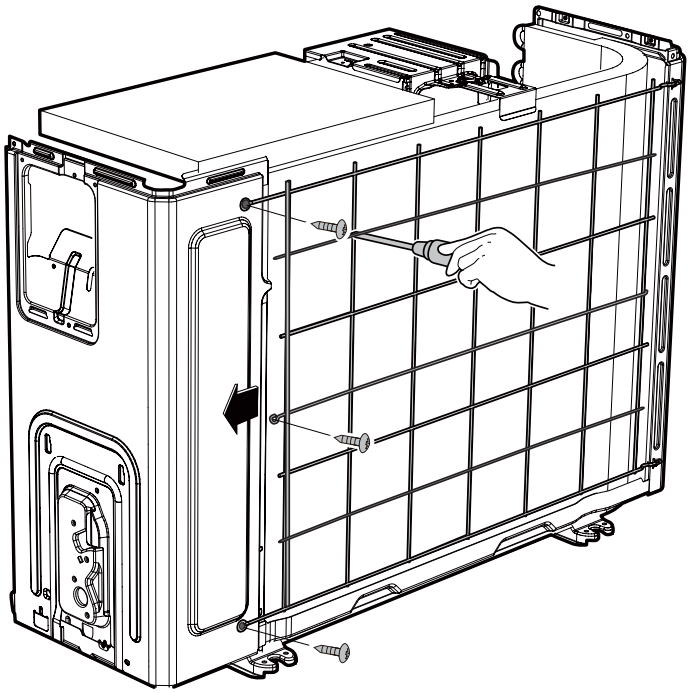 |

| PROCEDURES | ILLUSTRATION |
|---|---|
| 8. Remove the screws of the right panel and then remove the right panel (8 screws) | 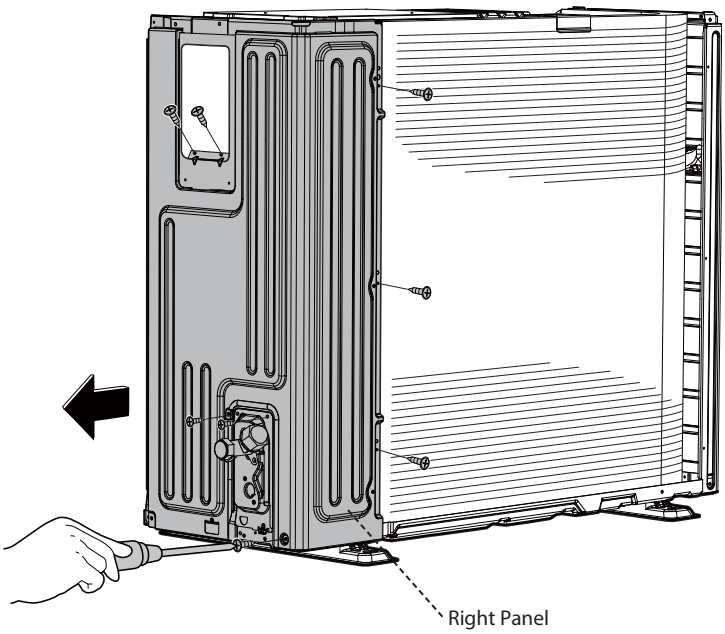 |

## 36K/48K Unit Disassembly - Panel Plate

| PROCEDURES | ILLUSTRATION |
|---|---|
| 1. Turn off the air conditioner and the power breaker<br>2. Remove the screw of the big handle and then remove the big handle (2 screws) (see illustration) | 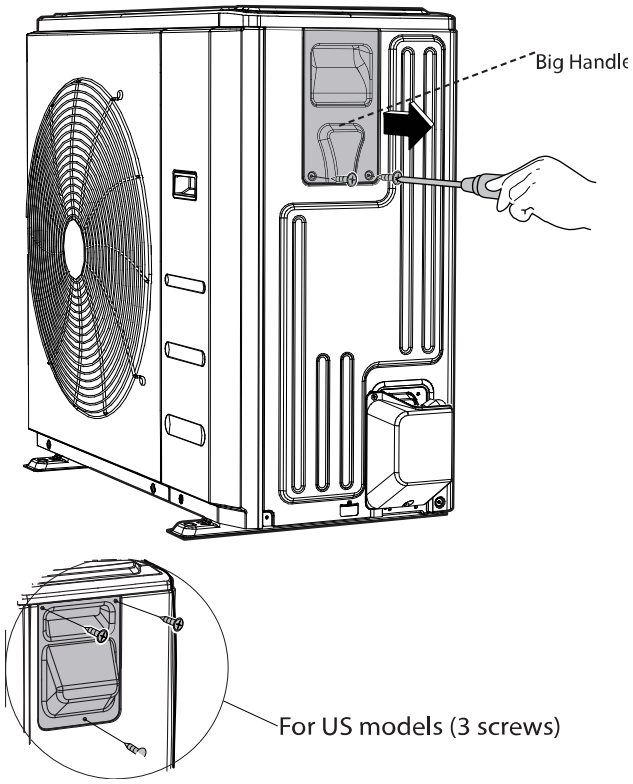 |
| 3. Remove the screws of the top cover and then remove the top cover (4 screws). One of the screws is located underneath the big handle. (see illustration) | 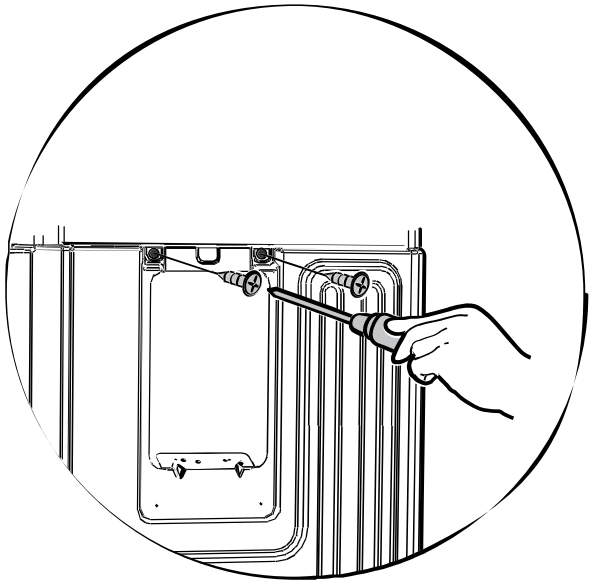 |

| PROCEDURES | ILLUSTRATION |
|---|---|
| 4. Remove the screws of the front right panel and then remove the front right panel (2 screws).(see illustration) | 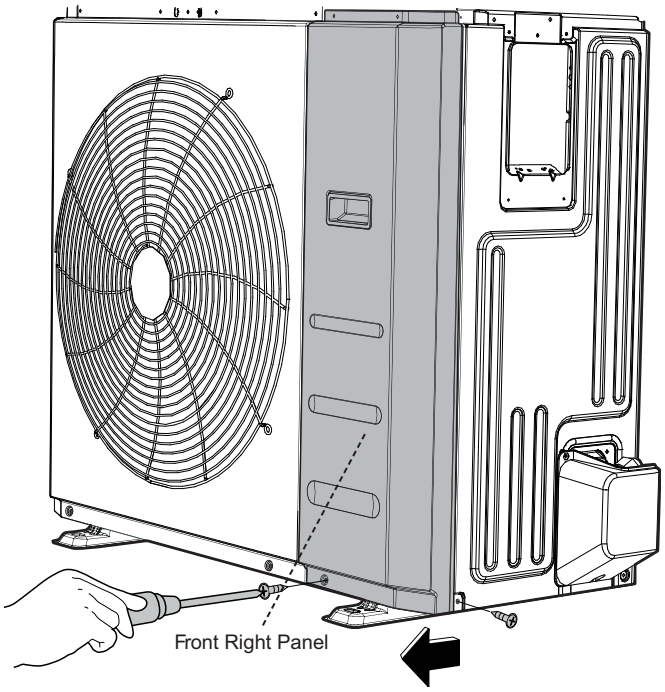 |
| 5. Remove the screws of the front panel and then remove the front panel (9 screws). (see illustration) | 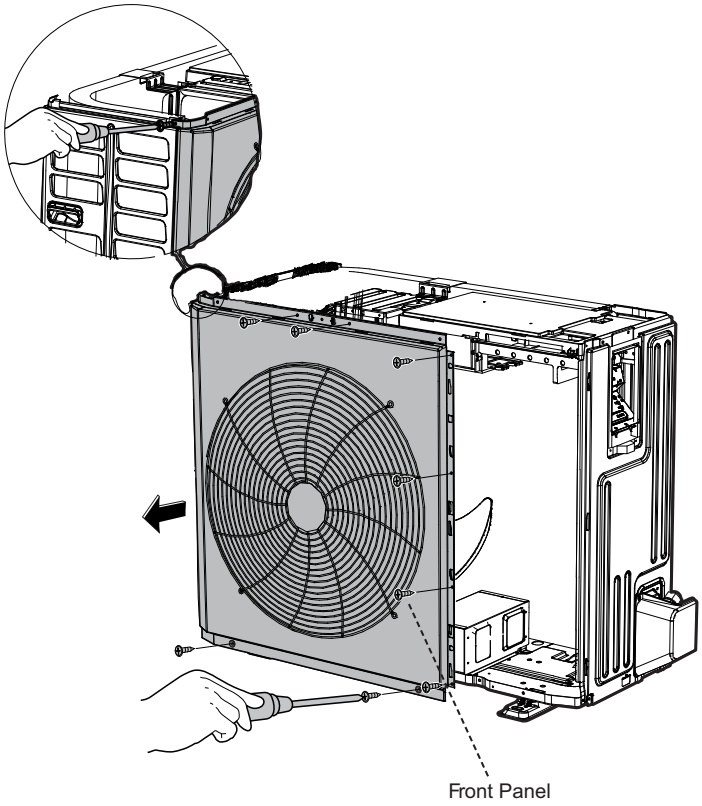 |

| PROCEDURES | ILLUSTRATION |
|---|---|
| 6. Remove the screws of water collecting cover and then remove the water collecting cover (2 screws) (see illustration) | 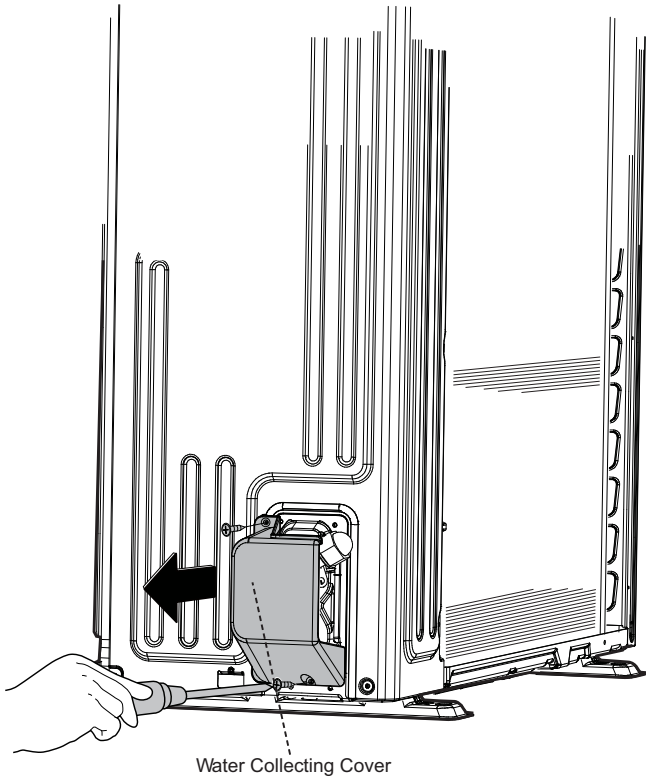 |
| 7. For some models, remove the screws of the rear net and then remove the rear net (3 screws) (see illustration) | 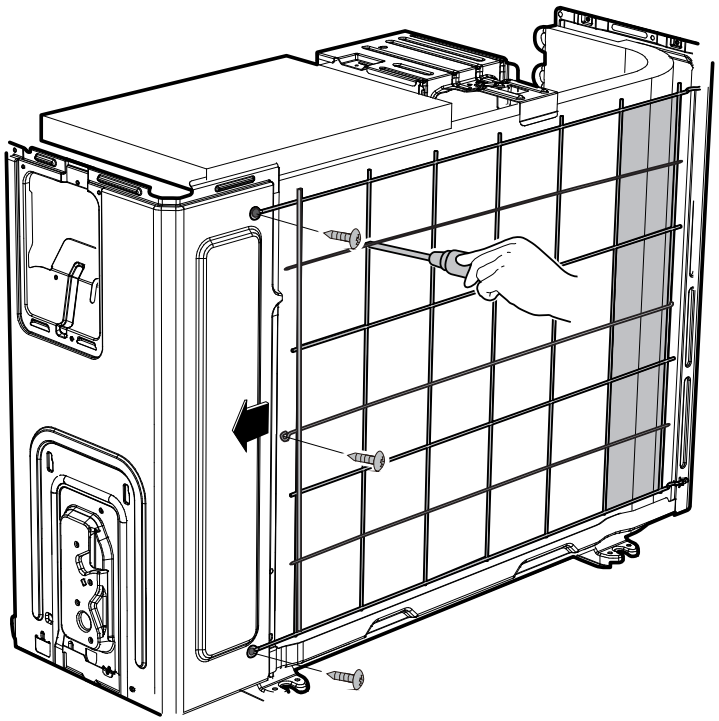 |

| PROCEDURES | ILLUSTRATION |
|---|---|
| 8. Remove the screws of the right panel and then remove the right panel (8 screws) | 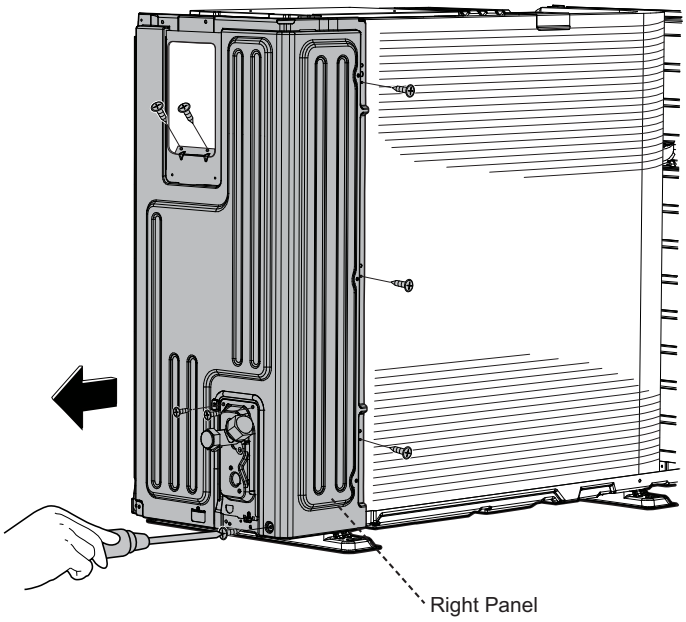 |

## 60K Unit Disassembly - Panel Plate

| PROCEDURES | ILLUSTRATION |
|---|---|
| 1. Turn off the air conditioner and the power breaker<br>2. Remove the screws of the big handle and then remove the big handle (2 screws) (see illustration) | 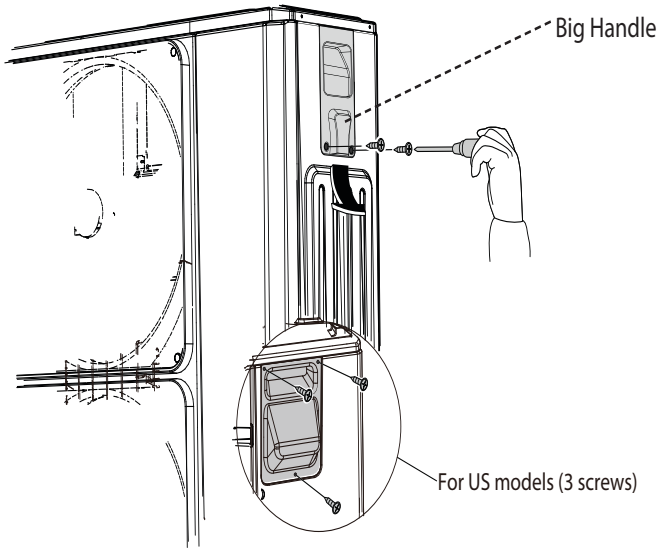 |
| 3. Remove the screws of the top cover and then remove the top cover (4 screws). Two of the screws is located underneath the big handle (see illustration) | 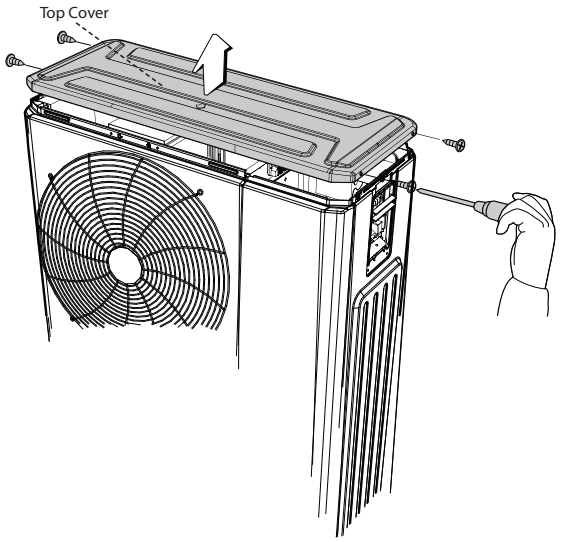 |
| 4. Remove the screws of water collecting cover and then remove the water collecting cover (2 screws) (see illustration) | 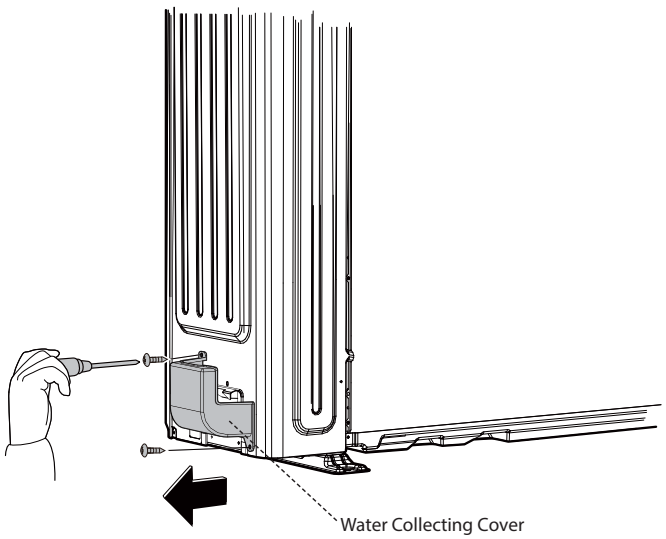 |

| PROCEDURES | ILLUSTRATION |
|---|---|
| 5. Remove the screws of the front right panel and then remove the front right panel (2 screws).(see illustration) | 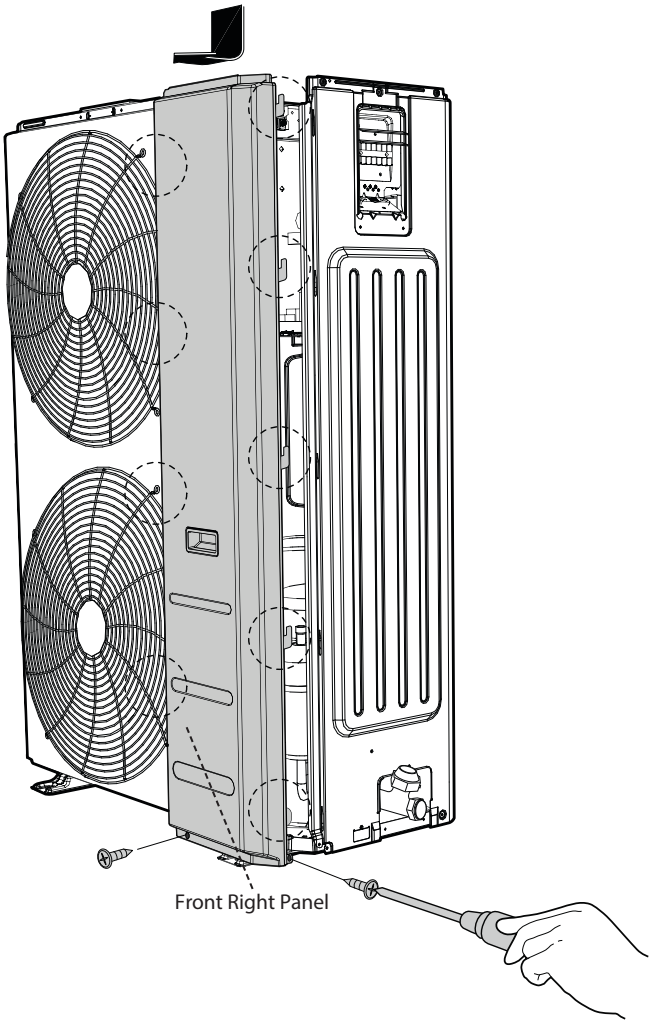 |

| PROCEDURES | ILLUSTRATION |
|---|---|
| 6. Remove the screws of the front panel and then remove the front panel (7 screws) | 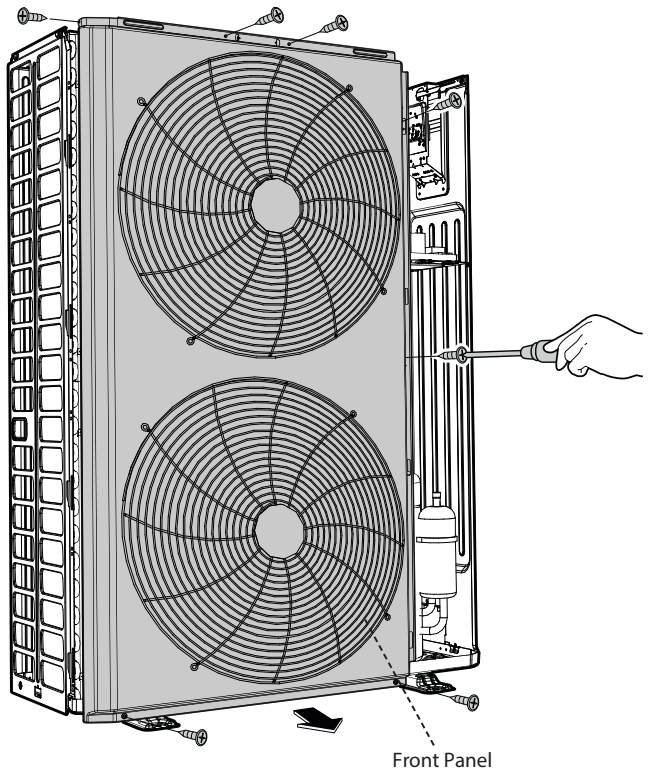 |
| 7. Remove the screws of the right panel and then remove the right panel (10 screws) (see illustration) | 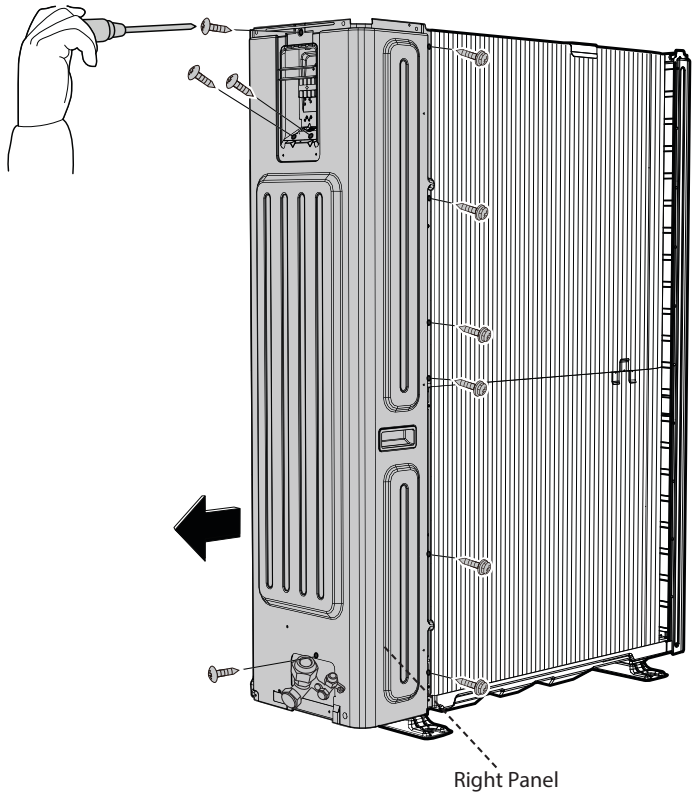 |

| PROCEDURES | ILLUSTRATION |
|---|---|
| 8. Remove the screws of the rear net and then remove the rear net (4 screws) (see illustration) | 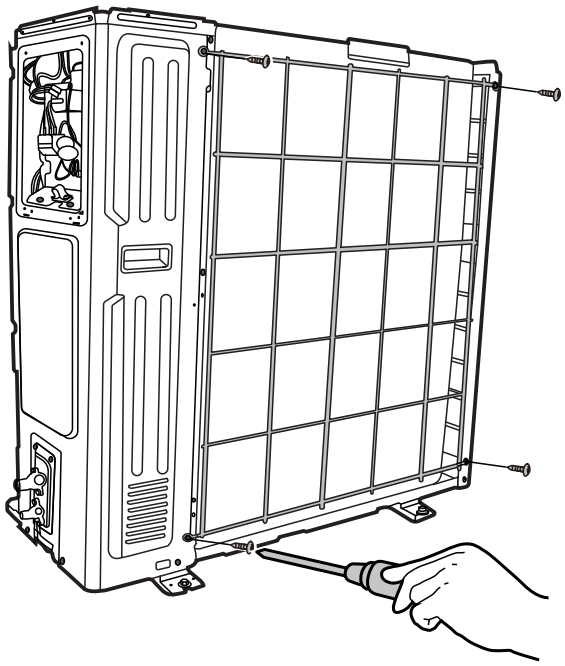 |
| 9. Remove the screws of the right panel and then remove the right panel (10 screws) (see illustration) | 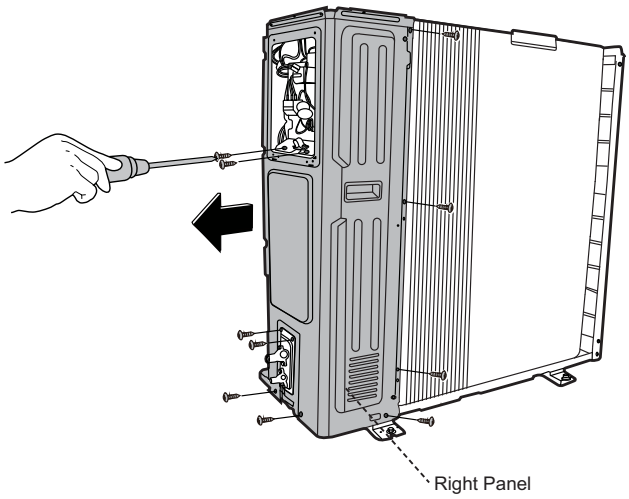  |

## 18K, 24K, Disassembly - Electrical Parts

| PROCEDURES | ILLUSTRATION |
|---|---|
| 1. Remove the 5 screws and unfix two hooks.(.(see illustration)<br>**NOTE:** Electric control box cover cannot be removed, so the voltage between P and N cannot be measured.<br>**For some models, there might be a wiring diagram covering the screw.** | 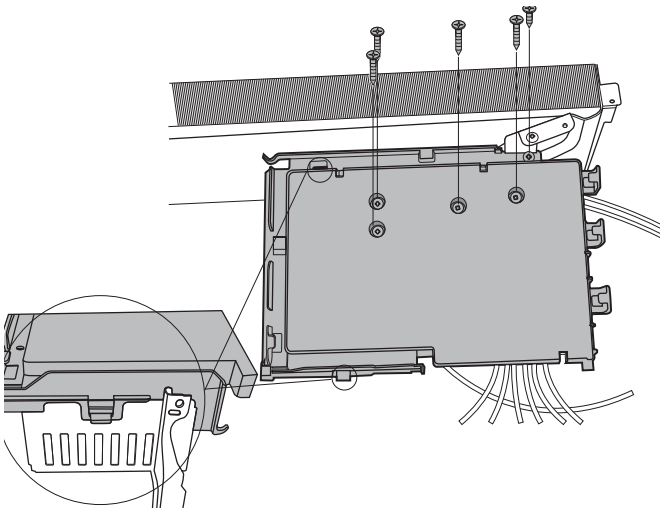 |
| 2. Disconnect the connector for fan motor from the electronic control board (see illustration)<br>3. Remove the connector for the compressor<br>4. Pull out the two blue wires connected with the four way valve<br>5. Pull out connectors of the condenser coil temp. sensor(T3),outdoor ambient temp. sensor(T4) and discharge temp. sensor (TP).<br>6. Disconnect the electronic expansion valve wire.<br>7. Remove the connector for the DR and reactor.<br>8. Then remove the electronic control board.<br>**NOTE:** When replacing the electronic control board with a new one, pay attention to applying thermal paste on the heat sink. | 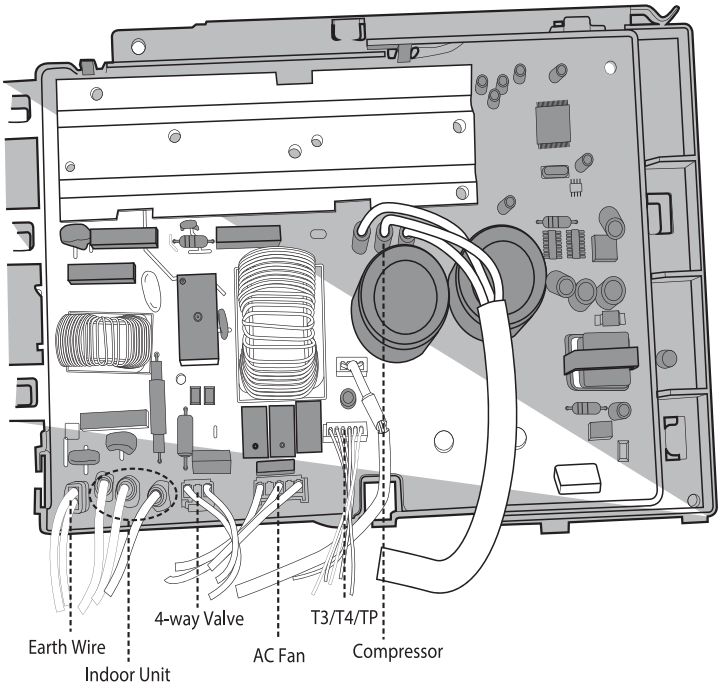 |

| PROCEDURES | ILLUSTRATION |
|---|---|
| 9. Remove the 1 screw and disconnect the wires and then remove the 24V board. (see illustration) | 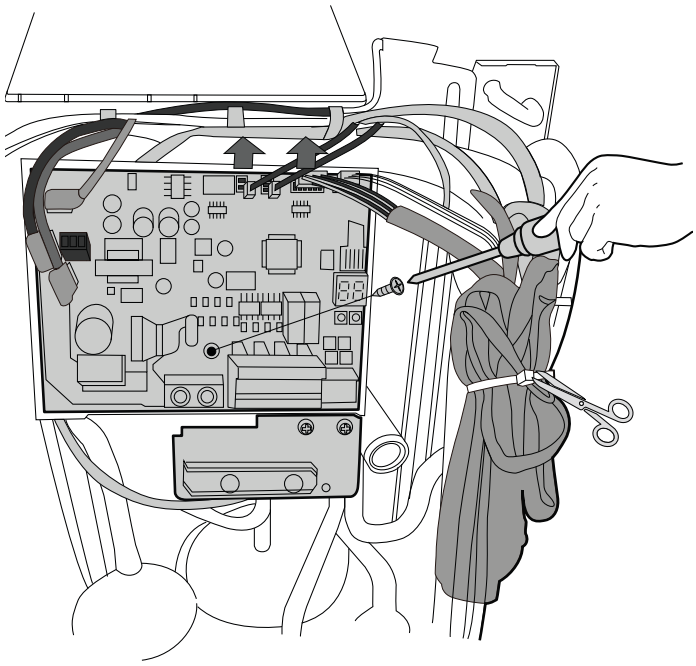 |

## 30K, 36K, 48K, Disassembly - Electrical Parts

| PROCEDURES | ILLUSTRATION |
|---|---|
| 1. Remove the cover of electrical control box..(.(see illustration) | 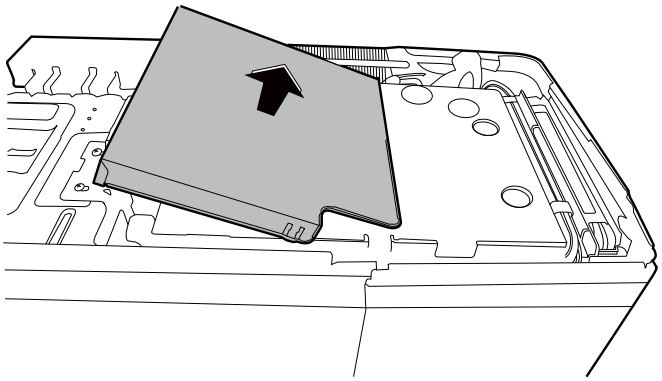 |
| 2. Disconnect the fan motor connector. (see illustration) | 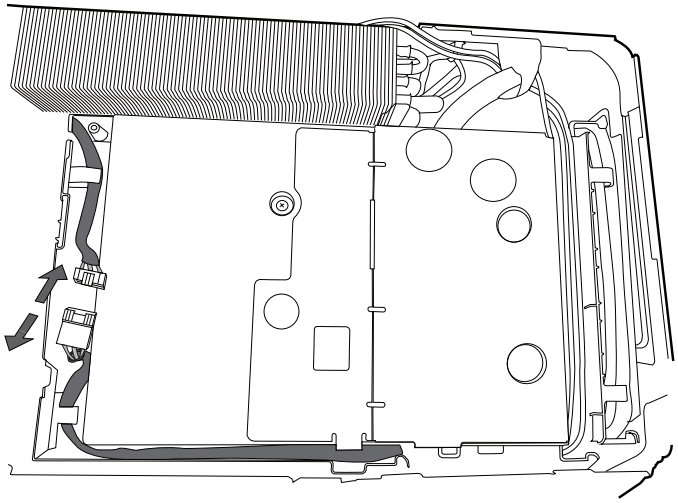 |
| 3. Remove eight fixing screws.. (see illustration)<br><br>4. Turn over the electronic control box subassembly. | 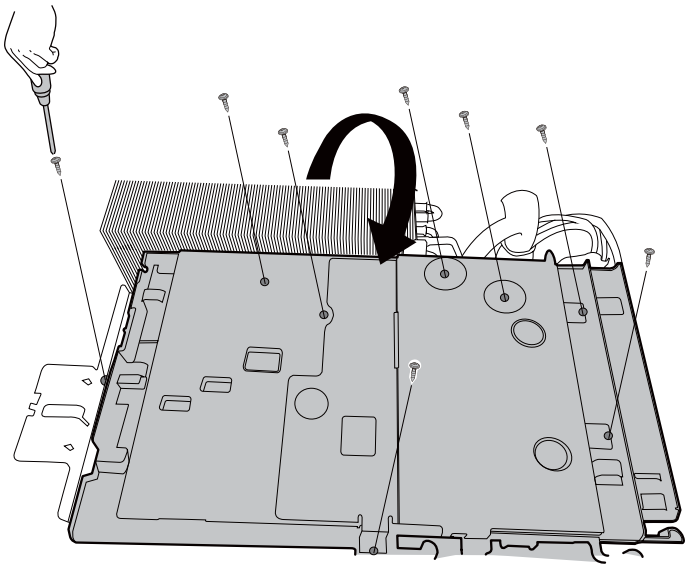 |

| PROCEDURES | ILLUSTRATION |
|---|---|
| 5. Remove 3 screws and then remove the bracket.<br><br>6. Disconnect the connectors from the electronic control board.<br><br>7. Remove 3 screws and then remove the electronic control board. | 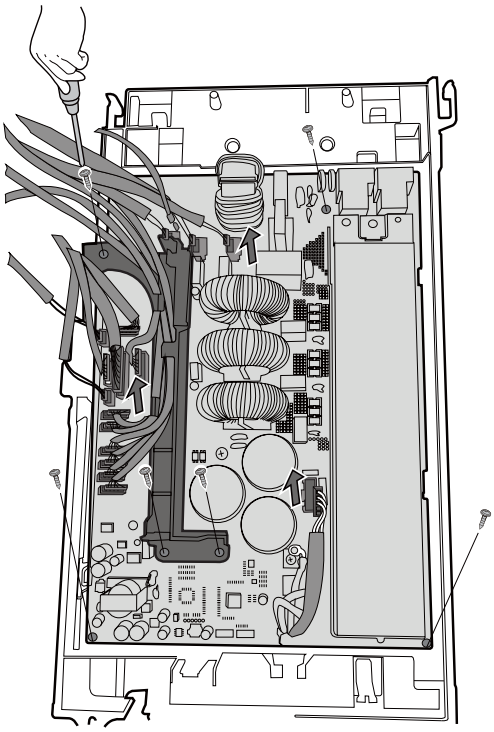 |
| 8. Pull out the connector, remove one screw and then remove the 24V board subassembly on terminal board. | 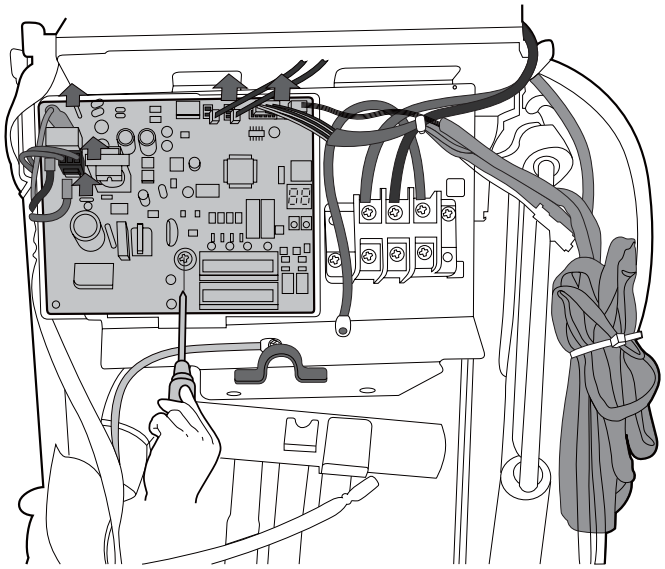 |

## 60K, Disassembly - Electrical Parts

| PROCEDURES | ILLUSTRATION |
|---|---|
| 1. Disconnect the connectors from the electronic control board. (see illustration)<br>2. Remove 3 screws and then remove the electronic control board.( | 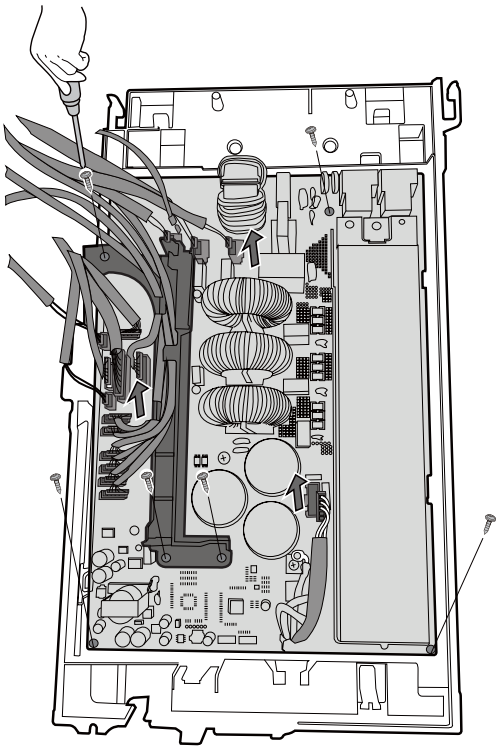 |
| 3. Pull out the connector, remove one screw and then remove the 24V board subassembly on terminal board. (see illustration) | 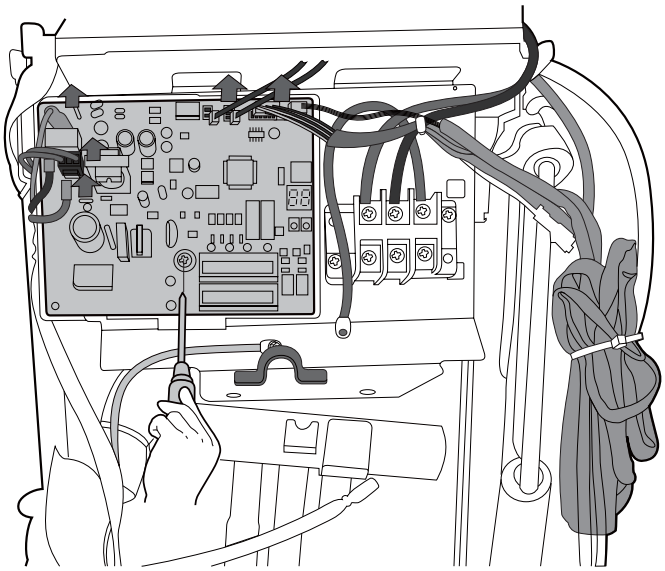 |

## All Size Units, Disassembly - Fan Assembly

| PROCEDURES | ILLUSTRATION |
|---|---|
| 1. Remove the nut securing the fan with a spanner.<br>2. Remove the fan. (see illustration) | 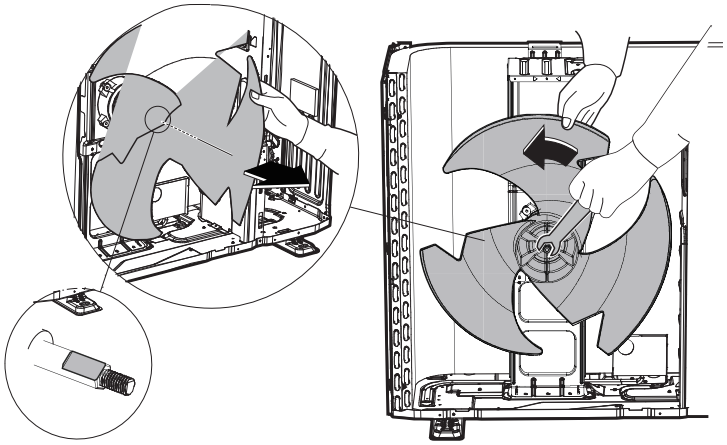 |

## All Size Units, Disassembly - Fan Motor

| PROCEDURES | ILLUSTRATION |
|---|---|
| 1. Remove the fixing screws of the fan motor (4 screws)<br>2. Remove the fan motor. (see illustration) | 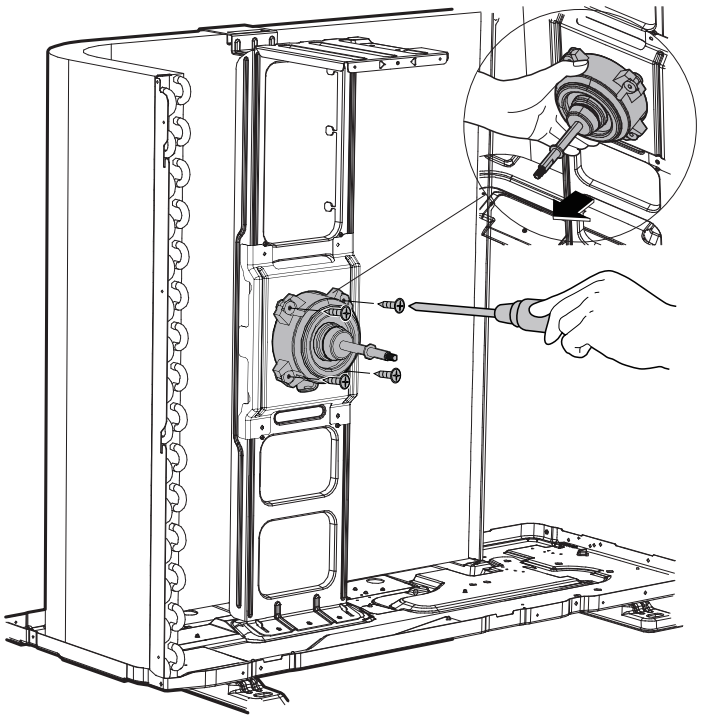 |

## All Size Units, Disassembly - Sound Blanket

| PROCEDURES | ILLUSTRATION |
|---|---|
| 1. Remove the sound blanket (side and top)) (see illustration) | 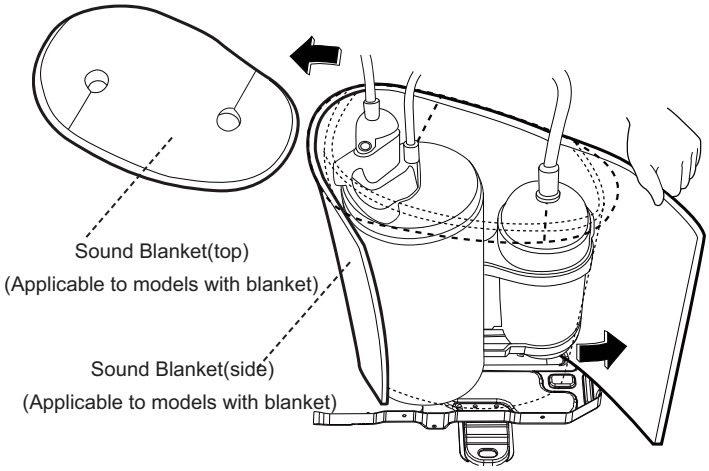 |

## All Size Units, Disassembly - Four-Way Valve (For Heat Pump Models

**⚠ WARNING**

**FIRE HAZARD**

Evacuate the system and confirm that there is no refrigerant left in the system before removing the four-way valve and the compressor. (For R32 & R290, you should evacuate the system with the vacuum pump; flush the system with nitrogen; then repeat the two steps before heating up the brazed parts. The operations above should be implemented by professionals.)

**NOTE:** Remove the panel plate, connection of four-way valve on PCB (refer to “18K/24K Unit Disassembly - Panel Plate” on page 65, “30K Unit Disassembly - Panel Plate” on page 68, “36K/48K Unit Disassembly - Panel Plate” on page 72, or “60K Unit Disassembly - Panel Plate” on page 76 and “18K, 24K, Disassembly - Electrical Parts” on page 80) before disassembling sound blanket.

| PROCEDURES | ILLUSTRATION |
|---|---|
| 1. Heat up the brazed parts and then detach the the four-way valve and the piper. (see illustration)<br>2. Remove the four-way valve assembly with pliers. (see illustration) | 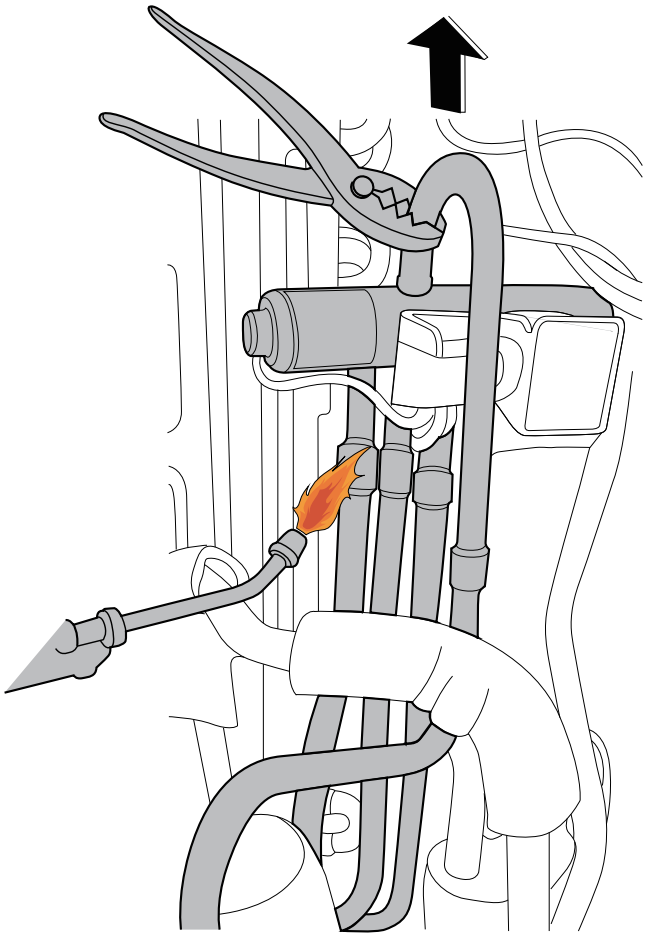 |

## All Size Units, Disassembly - Compressor

**⚠ WARNING**

**EXPLOSION RISK**

Evacuate the system and confirm that there is no refrigerant left in the system before removing the four-way valve and the compressor. (For R32 & R290, you should evacuate the system with the vacuum pump; flush the system with nitrogen; then repeat the two steps before heating up the brazed parts. The operations above should be implemented by professionals.)

**NOTE:** Remove the panel plate, connection of four-way valve on PCB (refer to “18K/24K Unit Disassembly - Panel Plate” on page 65, “30K Unit Disassembly - Panel Plate” on page 68, “36K/48K Unit Disassembly - Panel Plate” on page 72, or “60K Unit Disassembly - Panel Plate” on page 76 and “18K, 24K, Disassembly - Electrical Parts” on page 80) before disassembling sound blanket.

| PROCEDURES | ILLUSTRATION |
|---|---|
| 1. Remove the flange nut of terminal cover and remove the terminal cover (see illustration) | 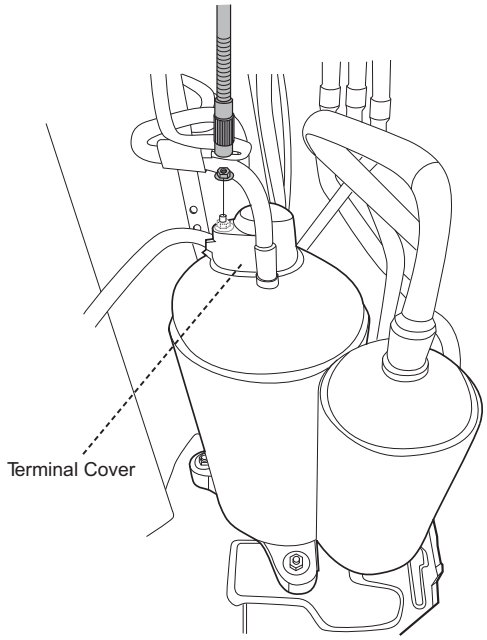  |
| 2. Disconnect the connectors (see illustration) | 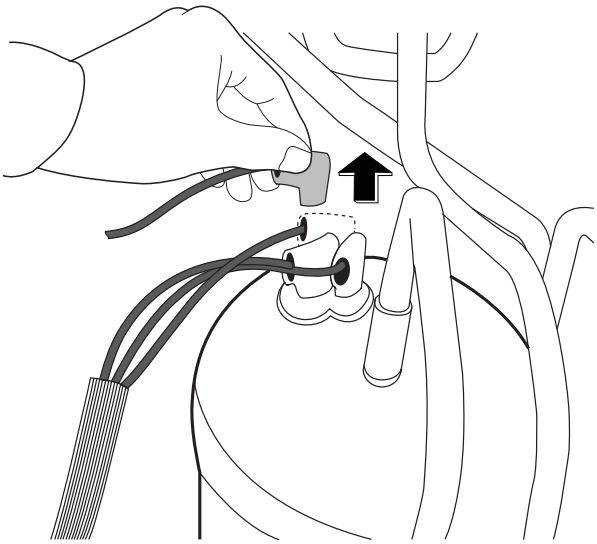 |

| PROCEDURES | ILLUSTRATION |
|---|---|
| 3. Remove the hex nuts and washers securing the compressor, located on the bottom plate. (see illustration) | 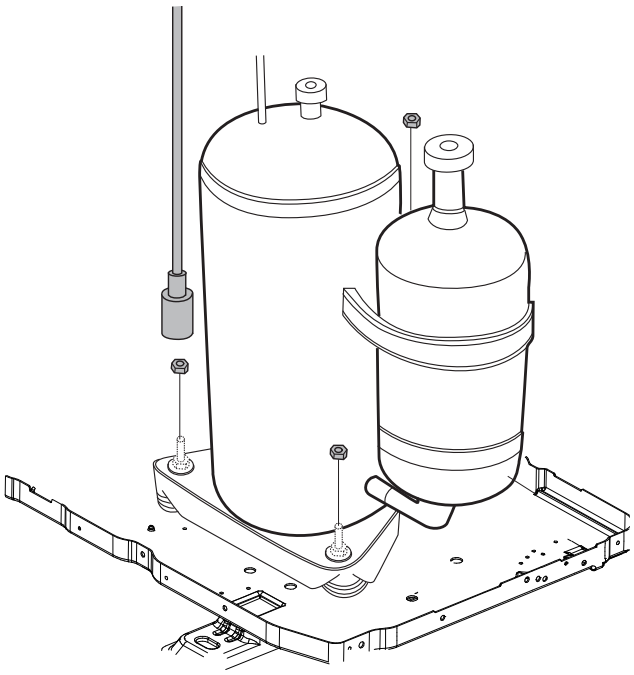 |
| 4. Heat up the brazed parts and then remove the discharge pipe and the suction pipe. (see illustration)<br><br>5. Lift the compressor from the base pan assembly with pliers. (see illustration) | 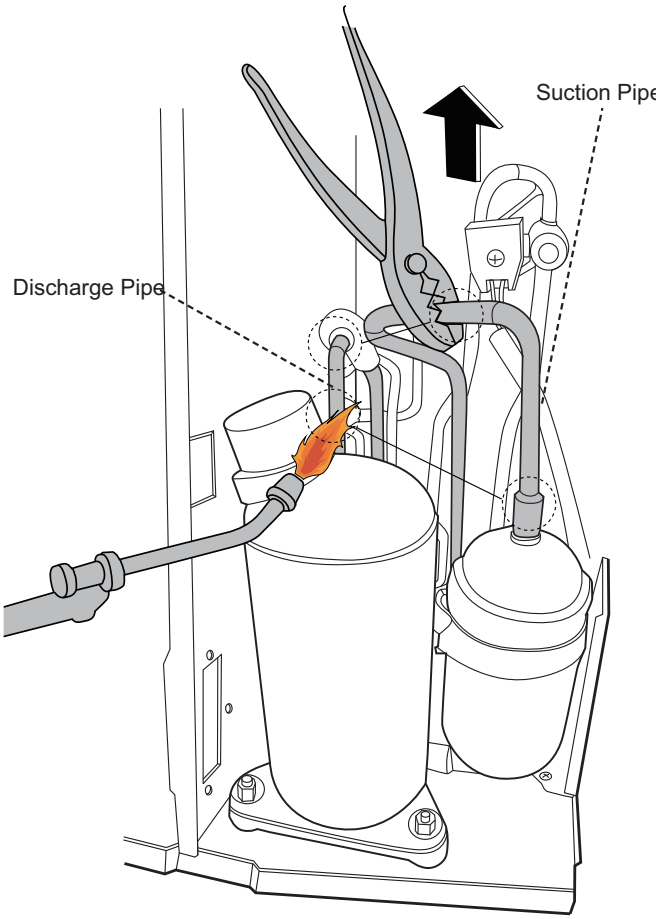 |

# APPENDIX

## Temperature Sensor Resistance Value Table for TP (°C - K)

| °C | °F | K Ohm | °C | °F | K Ohm | °C | °F | K Ohm | °C | °F | K Ohm |
|---|---|---|---|---|---|---|---|---|---|---|---|
| -20 | -4 | 542.7 | 20 | 68 | 68.66 | 60 | 140 | 13.59 | 100 | 212 | 3.702 |
| -19 | -2 | 511.9 | 21 | 70 | 65.62 | 61 | 142 | 13.11 | 101 | 214 | 3.595 |
| -18 | 0 | 483 | 22 | 72 | 62.73 | 62 | 144 | 12.65 | 102 | 216 | 3.492 |
| -17 | 1 | 455.9 | 23 | 73 | 59.98 | 63 | 145 | 12.21 | 103 | 217 | 3.392 |
| -16 | 3 | 430.5 | 24 | 75 | 57.37 | 64 | 147 | 11.79 | 104 | 219 | 3.296 |
| -15 | 5 | 406.7 | 25 | 77 | 54.89 | 65 | 149 | 11.38 | 105 | 221 | 3.203 |
| -14 | 7 | 384.3 | 26 | 79 | 52.53 | 66 | 151 | 10.99 | 106 | 223 | 3.113 |
| -13 | 9 | 363.3 | 27 | 81 | 50.28 | 67 | 153 | 10.61 | 107 | 225 | 3.025 |
| -12 | 10 | 343.6 | 28 | 82 | 48.14 | 68 | 154 | 10.25 | 108 | 226 | 2.941 |
| -11 | 12 | 325.1 | 29 | 84 | 46.11 | 69 | 156 | 9.902 | 109 | 228 | 2.86 |
| -10 | 14 | 307.7 | 30 | 86 | 44.17 | 70 | 158 | 9.569 | 110 | 230 | 2.781 |
| -9 | 16 | 291.3 | 31 | 88 | 42.33 | 71 | 160 | 9.248 | 111 | 232 | 2.704 |
| -8 | 18 | 275.9 | 32 | 90 | 40.57 | 72 | 162 | 8.94 | 112 | 234 | 2.63 |
| -7 | 19 | 261.4 | 33 | 91 | 38.89 | 73 | 163 | 8.643 | 113 | 235 | 2.559 |
| -6 | 21 | 247.8 | 34 | 93 | 37.3 | 74 | 165 | 8.358 | 114 | 237 | 2.489 |
| -5 | 23 | 234.9 | 35 | 95 | 35.78 | 75 | 167 | 8.084 | 115 | 239 | 2.422 |
| -4 | 25 | 222.8 | 36 | 97 | 34.32 | 76 | 169 | 7.82 | 116 | 241 | 2.357 |
| -3 | 27 | 211.4 | 37 | 99 | 32.94 | 77 | 171 | 7.566 | 117 | 243 | 2.294 |
| -2 | 28 | 200.7 | 38 | 100 | 31.62 | 78 | 172 | 7.321 | 118 | 244 | 2.233 |
| -1 | 30 | 190.5 | 39 | 102 | 30.36 | 79 | 174 | 7.086 | 119 | 246 | 2.174 |
| 0 | 32 | 180.9 | 40 | 104 | 29.15 | 80 | 176 | 6.859 | 120 | 248 | 2.117 |
| 1 | 34 | 171.9 | 41 | 106 | 28 | 81 | 178 | 6.641 | 121 | 250 | 2.061 |
| 2 | 36 | 163.3 | 42 | 108 | 26.9 | 82 | 180 | 6.43 | 122 | 252 | 2.007 |
| 3 | 37 | 155.2 | 43 | 109 | 25.86 | 83 | 181 | 6.228 | 123 | 253 | 1.955 |
| 4 | 39 | 147.6 | 44 | 111 | 24.85 | 84 | 183 | 6.033 | 124 | 255 | 1.905 |
| 5 | 41 | 140.4 | 45 | 113 | 23.89 | 85 | 185 | 5.844 | 125 | 257 | 1.856 |
| 6 | 43 | 133.5 | 46 | 115 | 22.89 | 86 | 187 | 5.663 | 126 | 259 | 1.808 |
| 7 | 45 | 127.1 | 47 | 117 | 22.1 | 87 | 189 | 5.488 | 127 | 261 | 1.762 |
| 8 | 46 | 121 | 48 | 118 | 21.26 | 88 | 190 | 5.32 | 128 | 262 | 1.717 |
| 9 | 48 | 115.2 | 49 | 120 | 20.46 | 89 | 192 | 5.157 | 129 | 264 | 1.674 |
| 10 | 50 | 109.8 | 50 | 122 | 19.69 | 90 | 194 | 5 | 130 | 266 | 1.632 |
| 11 | 52 | 104.6 | 51 | 124 | 18.96 | 91 | 196 | 4.849 | ? | ? | ? |
| 12 | 54 | 99.69 | 52 | 126 | 18.26 | 92 | 198 | 4.703 | ? | ? | ? |
| 13 | 55 | 95.05 | 53 | 127 | 17.58 | 93 | 199 | 4.562 | ? | ? | ? |
| 14 | 57 | 90.66 | 54 | 129 | 16.94 | 94 | 201 | 4.426 | ? | ? | ? |
| 15 | 59 | 86.49 | 55 | 131 | 16.32 | 95 | 203 | 4.294 | ? | ? | ? |
| 16 | 61 | 82.54 | 56 | 133 | 15.73 | 96 | 205 | 4.167 | ? | ? | ? |
| 17 | 63 | 78.79 | 57 | 135 | 15.16 | 97 | 207 | 4.045 | ? | ? | ? |
| 18 | 64 | 75.24 | 58 | 136 | 14.62 | 98 | 208 | 3.927 | ? | ? | ? |
| 19 | 66 | 71.86 | 59 | 138 | 14.09 | 99 | 210 | 3.812 | ? | ? | ? |

**Manufacturer reserves the right to change, at any time, specifications and designs without notice and without obligations.**

## Other Temperature Sensors Resistance Value Table (°C - K)

| °C | °F | K Ohm | °C | °F | K Ohm | °C | °F | K Ohm | °C | °F | K Ohm |
|---|---|---|---|---|---|---|---|---|---|---|---|
| -20 | -4 | 115.266 | 20 | 68 | 12.6431 | 60 | 140 | 2.35774 | 100 | 212 | 0.62973 |
| -19 | -2 | 108.146 | 21 | 70 | 12.0561 | 61 | 142 | 2.27249 | 101 | 214 | 0.61148 |
| -18 | 0 | 101.517 | 22 | 72 | 11.5 | 62 | 144 | 2.19073 | 102 | 216 | 0.59386 |
| -17 | 1 | 96.3423 | 23 | 73 | 10.9731 | 63 | 145 | 2.11241 | 103 | 217 | 0.57683 |
| -16 | 3 | 89.5865 | 24 | 75 | 10.4736 | 64 | 147 | 2.03732 | 104 | 219 | 0.56038 |
| -15 | 5 | 84.219 | 25 | 77 | 10 | 65 | 149 | 1.96532 | 105 | 221 | 0.54448 |
| -14 | 7 | 79.311 | 26 | 79 | 9.55074 | 66 | 151 | 1.89627 | 106 | 223 | 0.52912 |
| -13 | 9 | 74.536 | 27 | 81 | 9.12445 | 67 | 153 | 1.83003 | 107 | 225 | 0.51426 |
| -12 | 10 | 70.1698 | 28 | 82 | 8.71983 | 68 | 154 | 1.76647 | 108 | 226 | 0.49989 |
| -11 | 12 | 66.0898 | 29 | 84 | 8.33566 | 69 | 156 | 1.70547 | 109 | 228 | 0.486 |
| -10 | 14 | 62.2756 | 30 | 86 | 7.97078 | 70 | 158 | 1.64691 | 110 | 230 | 0.47256 |
| -9 | 16 | 58.7079 | 31 | 88 | 7.62411 | 71 | 160 | 1.59068 | 111 | 232 | 0.45957 |
| -8 | 18 | 56.3694 | 32 | 90 | 7.29464 | 72 | 162 | 1.53668 | 112 | 234 | 0.44699 |
| -7 | 19 | 52.2438 | 33 | 91 | 6.98142 | 73 | 163 | 1.48481 | 113 | 235 | 0.43482 |
| -6 | 21 | 49.3161 | 34 | 93 | 6.68355 | 74 | 165 | 1.43498 | 114 | 237 | 0.42304 |
| -5 | 23 | 46.5725 | 35 | 95 | 6.40021 | 75 | 167 | 1.38703 | 115 | 239 | 0.41164 |
| -4 | 25 | 44 | 36 | 97 | 6.13059 | 76 | 169 | 1.34105 | 116 | 241 | 0.4006 |
| -3 | 27 | 41.5878 | 37 | 99 | 5.87359 | 77 | 171 | 1.29078 | 117 | 243 | 0.38991 |
| -2 | 28 | 39.8239 | 38 | 100 | 5.62961 | 78 | 172 | 1.25423 | 118 | 244 | 0.37956 |
| -1 | 30 | 37.1988 | 39 | 102 | 5.39689 | 79 | 174 | 1.2133 | 119 | 246 | 0.36954 |
| 0 | 32 | 35.2024 | 40 | 104 | 5.17519 | 80 | 176 | 1.17393 | 120 | 248 | 0.35982 |
| 1 | 34 | 33.3269 | 41 | 106 | 4.96392 | 81 | 178 | 1.13604 | 121 | 250 | 0.35042 |
| 2 | 36 | 31.5635 | 42 | 108 | 4.76253 | 82 | 180 | 1.09958 | 122 | 252 | 0.3413 |
| 3 | 37 | 29.9058 | 43 | 109 | 4.5705 | 83 | 181 | 1.06448 | 123 | 253 | 0.33246 |
| 4 | 39 | 28.3459 | 44 | 111 | 4.38736 | 84 | 183 | 1.03069 | 124 | 255 | 0.3239 |
| 5 | 41 | 26.8778 | 45 | 113 | 4.21263 | 85 | 185 | 0.99815 | 125 | 257 | 0.31559 |
| 6 | 43 | 25.4954 | 46 | 115 | 4.04589 | 86 | 187 | 0.96681 | 126 | 259 | 0.30754 |
| 7 | 45 | 24.1932 | 47 | 117 | 3.88673 | 87 | 189 | 0.93662 | 127 | 261 | 0.29974 |
| 8 | 46 | 22.5662 | 48 | 118 | 3.73476 | 88 | 190 | 0.90753 | 128 | 262 | 0.29216 |
| 9 | 48 | 21.8094 | 49 | 120 | 3.58962 | 89 | 192 | 0.8795 | 129 | 264 | 0.28482 |
| 10 | 50 | 20.7184 | 50 | 122 | 3.45097 | 90 | 194 | 0.85248 | 130 | 266 | 0.2777 |
| 11 | 52 | 19.6891 | 51 | 124 | 3.31847 | 91 | 196 | 0.82643 | 131 | 268 | 0.27078 |
| 12 | 54 | 18.7177 | 52 | 126 | 3.19183 | 92 | 198 | 0.80132 | 132 | 270 | 0.26408 |
| 13 | 55 | 17.8005 | 53 | 127 | 3.07075 | 93 | 199 | 0.77709 | 133 | 271 | 0.25757 |
| 14 | 57 | 16.9341 | 54 | 129 | 2.95896 | 94 | 201 | 0.75373 | 134 | 273 | 0.25125 |
| 15 | 59 | 16.1156 | 55 | 131 | 2.84421 | 95 | 203 | 0.73119 | 135 | 275 | 0.24512 |
| 16 | 61 | 15.3418 | 56 | 133 | 2.73823 | 96 | 205 | 0.70944 | 136 | 277 | 0.23916 |
| 17 | 63 | 14.6181 | 57 | 135 | 2.63682 | 97 | 207 | 0.68844 | 137 | 279 | 0.23338 |
| 18 | 64 | 13.918 | 58 | 136 | 2.53973 | 98 | 208 | 0.66818 | 138 | 280 | 0.22776 |
| 19 | 66 | 13.2631 | 59 | 138 | 2.44677 | 99 | 210 | 0.64862 | 139 | 282 | 0.22231 |

**Manufacturer reserves the right to change, at any time, specifications and designs without notice and without obligations.**

## System Pressure Table-R454B

| Pressure | | | Temperature | | Pressure | | | Temperature | |
|---|---|---|---|---|---|---|---|---|---|
| Kpa | bar | PSI | °C | °F | Kpa | bar | PSI | °C | °F |
| 58.196 | 0.58 | 8.44 | -60 | -76 | 935.23 | 9.35 | 135.64 | 8 | 46.4 |
| 61.517 | 0.62 | 8.92 | -59 | -74.2 | 963.75 | 9.64 | 139.78 | 9 | 48.2 |
| 64.988 | 0.65 | 9.43 | -58 | -72.4 | 992.93 | 9.93 | 144.01 | 10 | 50 |
| 68.615 | 0.69 | 9.95 | -57 | -70.6 | 1022.8 | 10.23 | 148.34 | 11 | 51.8 |
| 72.402 | 0.72 | 10.50 | -56 | -68.8 | 1053.3 | 10.53 | 152.76 | 12 | 53.6 |
| 76.354 | 0.76 | 11.07 | -55 | -67 | 1084.5 | 10.85 | 157.29 | 13 | 55.4 |
| 80.478 | 0.80 | 11.67 | -54 | -65.2 | 1116.4 | 11.16 | 161.91 | 14 | 57.2 |
| 84.776 | 0.85 | 12.30 | -53 | -63.4 | 1149 | 11.49 | 166.64 | 15 | 59 |
| 89.256 | 0.89 | 12.95 | -52 | -61.6 | 1182.3 | 11.82 | 171.47 | 16 | 60.8 |
| 93.923 | 0.94 | 13.62 | -51 | -59.8 | 1216.3 | 12.16 | 176.40 | 17 | 62.6 |
| 98.781 | 0.99 | 14.33 | -50 | -58 | 1251.1 | 12.51 | 181.45 | 18 | 64.4 |
| 103.84 | 1.04 | 15.06 | -49 | -56.2 | 1286.6 | 12.87 | 186.60 | 19 | 66.2 |
| 109.1 | 1.09 | 15.82 | -48 | -54.4 | 1322.8 | 13.23 | 191.85 | 20 | 68 |
| 114.56 | 1.15 | 16.61 | -47 | -52.6 | 1359.9 | 13.60 | 197.23 | 21 | 69.8 |
| 120.25 | 1.20 | 17.44 | -46 | -50.8 | 1397.7 | 13.98 | 202.71 | 22 | 71.6 |
| 126.15 | 1.26 | 18.30 | -45 | -49 | 1436.3 | 14.36 | 208.31 | 23 | 73.4 |
| 132.28 | 1.32 | 19.18 | -44 | -47.2 | 1475.7 | 14.76 | 214.02 | 24 | 75.2 |
| 138.64 | 1.39 | 20.11 | -43 | -45.4 | 1515.9 | 15.16 | 219.85 | 25 | 77 |
| 145.24 | 1.45 | 21.06 | -42 | -43.6 | 1557 | 15.57 | 225.82 | 26 | 78.8 |
| 152.09 | 1.52 | 22.06 | -41 | -41.8 | 1598.9 | 15.99 | 231.89 | 27 | 80.6 |
| 159.18 | 1.59 | 23.09 | -40 | -40 | 1641.6 | 16.42 | 238.09 | 28 | 82.4 |
| 166.54 | 1.67 | 24.15 | -39 | -38.2 | 1685.2 | 16.85 | 244.41 | 29 | 84.2 |
| 174.15 | 1.74 | 25.26 | -38 | -36.4 | 1729.7 | 17.30 | 250.86 | 30 | 86 |
| 182.04 | 1.82 | 26.40 | -37 | -34.6 | 1775 | 17.75 | 257.43 | 31 | 87.8 |
| 190.2 | 1.90 | 27.59 | -36 | -32.8 | 1821.3 | 18.21 | 264.15 | 32 | 89.6 |
| 198.65 | 1.99 | 28.81 | -35 | -31 | 1868.4 | 18.68 | 270.98 | 33 | 91.4 |
| 207.39 | 2.07 | 30.08 | -34 | -29.2 | 1916.5 | 19.17 | 277.95 | 34 | 93.2 |
| 216.42 | 2.16 | 31.39 | -33 | -27.4 | 1965.6 | 19.66 | 285.08 | 35 | 95 |
| 225.76 | 2.26 | 32.74 | -32 | -25.6 | 2015.5 | 20.16 | 292.31 | 36 | 96.8 |
| 235.41 | 2.35 | 34.14 | -31 | -23.8 | 2066.5 | 20.67 | 299.71 | 37 | 98.6 |
| 245.37 | 2.45 | 35.59 | -30 | -22 | 2118.4 | 21.18 | 307.24 | 38 | 100.4 |
| 255.67 | 2.56 | 37.08 | -29 | -20.2 | 2171.3 | 21.71 | 314.91 | 39 | 102.2 |
| 266.29 | 2.66 | 38.62 | -28 | -18.4 | 2225.2 | 22.25 | 322.73 | 40 | 104 |
| 277.25 | 2.77 | 40.21 | -27 | -16.6 | 2280.2 | 22.80 | 330.70 | 41 | 105.8 |
| 288.56 | 2.89 | 41.85 | -26 | -14.8 | 2336.1 | 23.36 | 338.81 | 42 | 107.6 |
| 300.22 | 3.00 | 43.54 | -25 | -13 | 2393.2 | 23.93 | 347.09 | 43 | 109.4 |
| 312.24 | 3.12 | 45.28 | -24 | -11.2 | 2451.3 | 24.51 | 355.52 | 44 | 111.2 |
| 324.63 | 3.25 | 47.08 | -23 | -9.4 | 2510.4 | 25.10 | 364.09 | 45 | 113 |
| 337.39 | 3.37 | 48.93 | -22 | -7.6 | 2570.7 | 25.71 | 372.84 | 46 | 114.8 |
| 350.54 | 3.51 | 50.84 | -21 | -5.8 | 2632.1 | 26.32 | 381.74 | 47 | 116.6 |
| 364.08 | 3.64 | 52.80 | -20 | -4 | 2694.7 | 26.95 | 390.82 | 48 | 118.4 |
| 378.02 | 3.78 | 54.83 | -19 | -2.2 | 2758.3 | 27.58 | 400.04 | 49 | 120.2 |
| 392.37 | 3.92 | 56.91 | -18 | -0.4 | 2823.2 | 28.23 | 409.46 | 50 | 122 |
| 407.13 | 4.07 | 59.05 | -17 | 1.4 | 2889.3 | 28.89 | 419.04 | 51 | 123.8 |

**Manufacturer reserves the right to change, at any time, specifications and designs without notice and without obligations.**

## System Pressure Table-R454B (Continued)

| Pressure | | | Temperature | | Pressure | | | Temperature | |
|---|---|---|---|---|---|---|---|---|---|
| Kpa | bar | PSI | °C | °F | Kpa | bar | PSI | °C | °F |
| 422.31 | 4.22 | 61.25 | -16 | 3.2 | 2956.5 | 29.57 | 428.79 | 52 | 125.6 |
| 437.92 | 4.38 | 63.51 | -15 | 5 | 3025 | 30.25 | 438.72 | 53 | 127.4 |
| 453.98 | 4.54 | 65.84 | -14 | 6.8 | 3094.7 | 30.95 | 448.83 | 54 | 129.2 |
| 470.47 | 4.70 | 68.23 | -13 | 8.6 | 3165.7 | 31.66 | 459.13 | 55 | 131 |
| 487.43 | 4.87 | 70.69 | -12 | 10.4 | 3238.1 | 32.38 | 469.63 | 56 | 132.8 |
| 504.84 | 5.05 | 73.22 | -11 | 12.2 | 3311.7 | 33.12 | 480.30 | 57 | 134.6 |
| 522.73 | 5.23 | 75.81 | -10 | 14 | 3386.7 | 33.87 | 491.18 | 58 | 136.4 |
| 541.1 | 5.41 | 78.48 | -9 | 15.8 | 3463 | 34.63 | 502.25 | 59 | 138.2 |
| 559.95 | 5.60 | 81.21 | -8 | 17.6 | 3540.7 | 35.41 | 513.52 | 60 | 140 |
| 579.31 | 5.79 | 84.02 | -7 | 19.4 | 3619.9 | 36.20 | 525.00 | 61 | 141.8 |
| 599.16 | 5.99 | 86.90 | -6 | 21.2 | 3700.5 | 37.01 | 536.69 | 62 | 143.6 |
| 619.54 | 6.20 | 89.85 | -5 | 23 | 3782.7 | 37.83 | 548.61 | 63 | 145.4 |
| 640.43 | 6.40 | 92.88 | -4 | 24.8 | 3866.3 | 38.66 | 560.74 | 64 | 147.2 |
| 661.86 | 6.62 | 95.99 | -3 | 26.6 | 3951.5 | 39.52 | 573.10 | 65 | 149 |
| 683.82 | 6.84 | 99.18 | -2 | 28.4 | 4038.3 | 40.38 | 585.69 | 66 | 150.8 |
| 706.34 | 7.06 | 102.44 | -1 | 30.2 | 4126.8 | 41.27 | 598.52 | 67 | 152.6 |
| 729.41 | 7.29 | 105.79 | 0 | 32 | 4217 | 42.17 | 611.60 | 68 | 154.4 |
| 753.06 | 7.53 | 109.22 | 1 | 33.8 | 4309 | 43.09 | 624.95 | 69 | 156.2 |
| 777.28 | 7.77 | 112.73 | 2 | 35.6 | 4402.9 | 44.03 | 638.56 | 70 | 158 |
| 802.08 | 8.02 | 116.33 | 3 | 37.4 | 4498.7 | 44.99 | 652.46 | 71 | 159.8 |
| 827.48 | 8.27 | 120.01 | 4 | 39.2 | 4596.5 | 45.97 | 666.64 | 72 | 161.6 |
| 853.49 | 8.53 | 123.78 | 5 | 41 | 4696.5 | 46.97 | 681.15 | 73 | 163.4 |
| 880.11 | 8.80 | 127.64 | 6 | 42.8 | 4798.9 | 47.99 | 696.00 | 74 | 165.2 |
| 907.35 | 9.07 | 131.60 | 7 | 44.6 | 4904.1 | 49.04 | 711.25 | 75 | 167 |

© 2026 Carrier. All rights reserved.

**Manufacturer reserves the right to change, at any time, specifications and designs without notice and without obligations.**