TEMPSTAR®
Heating and Cooling Products

D5FSCA

Cassette Ductless System
Sizes 09 to 48

Product Data

Fig. 1 – Cassette

NOTE: Images are for illustration purposes only. Actual models may differ slightly.

TABLE OF CONTENTS

INDUSTRY LEADING FEATURES / BENEFITS 1
MODEL NUMBER NOMENCLATURE 3
STANDARD FEATURES AND ACCESSORIES 4
DIMENSIONS 5
CLEARANCES 7
SPECIFICATIONS. 8
APPLICATION DATA 8
WIRING 9
CONTROL SYSTEM. 9
WIRELESS REMOTE CONTROLLER 9
WIRED REMOTE CONTROLLER (OPTIONAL). 10
SOUND PRESSURE 10
SOUND PRESSURE TESTING METHOD 10
AIR FLOW DATA 10
AIR THROW DATA 10
MOISTURE REMOVAL 10
PIPING SPECIFICATIONS. 11
FAN AND MOTOR SPECIFICATIONS. 11
INDOOR REFRIGERANT COIL SPECIFICATIONS 11
WIRING DIAGRAMS 12
WIRING CONNECTION LABELS 13
WIRING CONNECTIONS 14
ELECTRICAL DATA 14
PERFORMANCE RATINGS. 14
REFRIGERANT SYSTEM DIAGRAM 14
NOISE CURVES 15
GUIDE SPECIFICATIONS 16

INDUSTRY LEADING FEATURES / BENEFITS

A PERFECT BALANCE BETWEEN BUDGET LIMITS, ENERGY SAVINGS AND COMFORT

The **D5FSCA** series ductless systems are a matched combination of an outdoor condensing unit and an indoor fan coil unit connected only by refrigerant tubing and wires.

The in-ceiling cassette fan coils are ideal for retrofit or modernization projects where a false ceiling is available. This selection of fan coils permits inexpensive and creative solutions to design problems such as:

- **Add-ons to current space (an office or family room addition)**
- **Special space requirements**
- **When changes in the load cannot be handled by the existing system**
- **Historical renovations or any application where preserving the look of the original structure is essential.**

The ideal complement to your ducted system when it is impractical or prohibitively expensive to use ductwork. These compact indoor fan coil units take up very little space in the room and do not obstruct windows. The fan coils are attractively styled to blend with most room decors. Advanced system components incorporate innovative technology to provide reliable cooling performance at low sound levels.

LOW SOUND LEVELS

When noise is a concern, the ductless systems are the answer. The
indoor units are whisper quiet. There are no compressors indoors, either in the conditioned space or directly over it, and there is none of the noise usually generated by air being forced through ductwork.

SECURE OPERATION

If security is an issue, outdoor and indoor units are connected only
by refrigerant piping and wiring to prevent intruders from crawling through ductwork. In addition, since outdoor units can be installed close to an outside wall, coils are protected from vandals and severe weather.

FAST INSTALLATION

This compact ductless system is simple to install. A mounting bracket is standard with the indoor units and only wire and piping needs to run between indoor and outdoor units. These units are fast and easy to install ensuring minimal disruption to customers in the home or workplace. This makes the ductless systems the equipment of choice, especially in retrofit situations.

BUILT-IN RELIABILITY

Ductless system indoor and outdoor units are designed to provide years of trouble-free operation.

The in-ceiling cassette units include protection against freeze-up and high evaporator temperatures on heat pumps.

The condensing units on heat pumps are protected by a three-minute time delay before the compressor starts the over-current protection and the high temperature protection.

ECONOMICAL OPERATION

The ductless system design allows individual room heating or cooling when required. There is no need to run large supply-air fans or chilled water pumps to handle a few spaces with unique load patterns. In addition, because air is moved only in the space required, no energy is wasted moving air through ducts.

EASY-TO-USE CONTROLS

The in-ceiling cassette has microprocessor-based controls to provide the ultimate in comfort and efficiency. The user friendly wireless remote control provides the interface between user and the unit.

SIMPLE SERVICING AND MAINTENANCE

Removing the top panel on outdoor units provides immediate access to the control compartment, providing a service technician access to check unit operation. In addition, the draw-thru design of the outdoor section means that dirt accumulates on the outside surface of the coil. Coils can be cleaned quickly from inside using a pressure hose and detergent.

On all indoor units, service and maintenance expense is reduced due to easy-to-use cleanable filters. In addition, these cassette systems have extensive self-diagnostics to assist in troubleshooting.

INDIVIDUAL ROOM COMFORT

Maximum comfort is provided because each space can be controlled individually based on usage pattern. The air sweep feature provided permits optimal room air mixing to eliminate hot and cold spots for occupant comfort. In addition, year-round comfort can be provided with heat pumps.

FACTORY INSTALLED CONDENSATE LIFT PUMP

Customizing these ductless systems to your application is easily accomplished. The factory installed condensate lift pump on the cassette fan coil unit provides installation flexibility.

SAFETY FEATURES

Compressor three-minute delay at restart

Compressor functions are delayed for up to ten seconds upon the first startup of the unit, and are delayed for up to three minutes upon subsequent unit restarts.

Automatic shutoff based on discharge temperature

If the compressor discharge temperature exceeds a certain level for nine seconds, the compressor ceases operation.

Inverter module protection

The inverter module has an automatic shutoff mechanism based on the unit's current, voltage, and temperature.

If automatic shutoff is initiated, the corresponding error code is displayed on the indoor unit and the unit ceases operation.

Indoor fan delayed operation

- When the unit starts, the louver is automatically activated and the indoor fan will operate after a period of setting time or the louver is in place.
- If the unit is in heating mode, the indoor fan is regulated by the anticold wind function.

Compressor preheating

Preheating is automatically activated when T4 sensor is lower than setting temperature. When T1-Tsc is higher than 6.3°F, the fan speed is 100%.

Sensor redundancy and automatic shutoff

- If one temperature sensor malfunctions, the air conditioner continues operation and displays the corresponding error code, allowing for emergency use.
- When more than one temperature sensor is malfunctioning, the air conditioner ceases operation.

OPTIONAL WIRED CONTROLLER

AGENCY LISTINGS

All systems are listed with AHRI (Air Conditioning, Heating & Refrigeration Institute), and ETL.

FCC

This device complies with part 15 of the FCC Rules. Operation is subject to the following two conditions: (1) This device may not cause harmful interference, and (2) this device must accept any interference received, including interference that may cause undesired operation.

FOR CLASS B DIGITAL DEVICE

NOTE: This equipment has been tested and found to comply with the limits for a Class B digital device, pursuant to part 15 of the FCC Rules. These limits are designed to provide reasonable protection against harmful interference in a residential installation. This equipment generates, uses and can radiate radio frequency energy and, if not installed and used in accordance with the instructions may cause harmful interference to radio communications. However, there is no guarantee that interference will not occur in a particular installation. If this equipment does cause harmful interference to radio or television reception, which can be determined by turning the equipment off and on, the user is encouraged to try t o correct the interference by one or more of the following measures:

- Reorient or relocate the receiving antenna
- Increase the distance between the equipment and the receiver
- Connect the equipment into an outlet on a circuit different from that to which the receiver is connected.
- Consult the dealer or an experienced radio/TV technician for assistance.

MODIFICATION

Any changes or modifications not expressly approved by the grantee of this device could void the user's authority to operate this device.

MODEL NUMBER NOMENCLATURE

D5F S C A H 36 X A K

D5F = INDOOR DUCTLESS UNIT

S = MODEL

SYSTEM TYPE
C = CASSETTE

A = MAJOR SERIES

SYSTEM TYPE
H = HEAT PUMP

VOLTAGE
J = 115 - 1 - 60
K = 208/230 - 1 - 60

A = STANDARD

NUMBER OF INDOOR UNIT
X = 0

NOMINAL CAPACITY

9* - 3/4 TON	24 - 2 TONS
12 - 1 TON	36 - 3 TONS
18 - 1.5 TONS	48 - 4 TONS

* - 9K adjusts to 12K capacity

Use of the AHRI Certified TM Mark indicates a manufacturer's participation in the program For verification of certification for individual products, go to www.ahridirectory.org.

STANDARD FEATURES AND ACCESSORIES

Table 1 – Features

Ease Of Installation	
Mounting Brackets	S
Low Voltage Controls	S
Comfort Features	
Microprocessor Controls	S
Wired Remote Control (1201 and 1401) (Optional)	A
Wireless Remote Control	S
Smart Kit USB Dongle	A
Automatic Horizontal Air Sweep	S
Air Direction Control	S
Auto Restart Function	S
Cold Blow Protection On Heat Pumps	S
Freeze Protection Mode On Heat Pumps	S
Humidity Sensor	S
Turbo Mode	S
Silence Mode	S
Auto Changeover On Heat Pumps	S
Follow Me	S
Energy Saving Features	
Sleep Mode	S
Stop/Start Timer	S
46°F Heating Mode (Heating Setback)	S
Safety And Reliability	
Indoor Coil Freeze Protection	S
Indoor Coil High Temp Protection in Heating Mode	S
Aluminum Golden Hydrophilic pre-coated fins	S
The unit is equipped with a refrigerant leak detection sensor	S
Ease Of Service And Maintenance	
Cleanable Filters	S
Diagnostics	S
Condensate Drain Adapter	S
Application Flexibility	
Condensate Lift Pump	S

Legend

S - Standard
A - Accessory

INDOOR UNIT ACCESSORIES

Grille

To maximize shipping efficiency, the grille for the in−ceiling cassette is set up as an accessory.

NOTE: Grille is required.

Table 2 – Required Accessories

Model	Description
KSALG0103AAA	Cassette panel for 09K-18K units
KSALG0203AAA	Cassette panel for 24K-48K units

Optional Accessories

There are two types of remote controls: wired and wireless.

Select a remote controller based on customer preferences and requirements and install in an appropriate place. Refer to catalogues and technical literature for guidance on selecting a suitable remote controller.

Table 3 – Accessories

Name of Accessory	Quantity	Image
Manual	1	
Soundproof/insulation sheath (24K/36K/48K)	1	
Soundproof/insulation sheath (24K/36K/48K)	1	
Outlet pipe sheath (24K/36K/48K)	1	
Wire tie (24K/36K/48K)	6	
Remote controller	1	
Magnetic ring (9K/12K/18K)	2	
Wireless module cable	1	
Remote controller holder	1	
Drain joint	1	
Seal ring	1	
Brass nut	2	
Tapping screw (24K/36K/48K)	6	
(9K/12K/18K)	2	
Drain clamp (24K/36K/48K)	2	
Conduit installation plate	1	
Batteries	2	
Rubber block (24K/36K/48K)	1	

DIMENSIONS

System Size		9K/12K	18K	24K	36K	48K
		(208/230 V)	(208/230 V)	(208/230 V)	(208/230 V)	(208/230 V)
Height (H)	in (mm)	9.65(245)	9.65(245)	8.07(205)	9.65(245)	11.30(287)
Width (W)	in (mm)	22.44(570)	22.44(570)	32.68(830)	32.68(830)	32.68(830)
Depth (D)	in (mm)	22.44(570)	22.44(570)	32.68(830)	32.68(830)	32.68(830)
Weight -Net	lbs. (kg)	35.27(16)	35.27(16)	47.18(21.4)	59.30(26.9)	64.59(29.3)
Packaging						
Height	in (mm)	11.61(295)	11.61(295)	9.84(250)	11.42(290)	12.99(330)
Width	in (mm)	28.15(715)	28.15(715)	35.83(910)	35.83(910)	35.83(910)
Depth	in (mm)	25.20(640)	25.20(640)	35.83(910)	35.83(910)	35.83(910)
Weight-Gross	lbs. (kg)	41.89(19)	41.89(19)	59.08(26.8)	71.43(32.4)	76.06(34.5)
Carton Drawing No.	--	ZXW-700*625*280S-NS	ZXW-700*625*280S-NS	ZX-895*895*235S-NS1	ZX-895*895*275S-NS1	ZX-895*895*315S-NS1
Carton Material	--	Double corrugated cardboard				
Material Thickness	in (mm)	0.295(7.5)	0.295(7.5)	0.295(7.5)	0.295(7.5)	0.295(7.5)

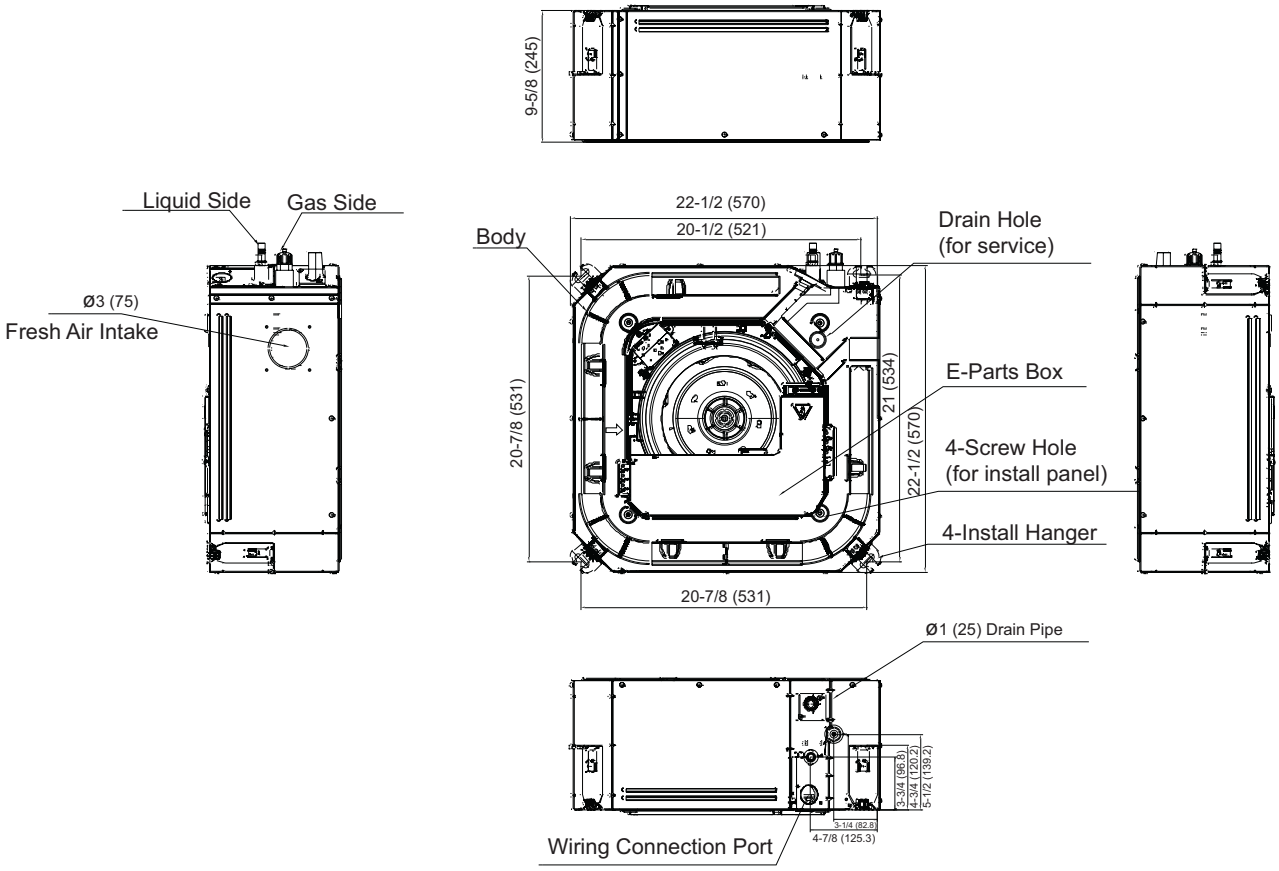

Fig. 2 – Indoor Unit (Sizes 9K/12K-18K)

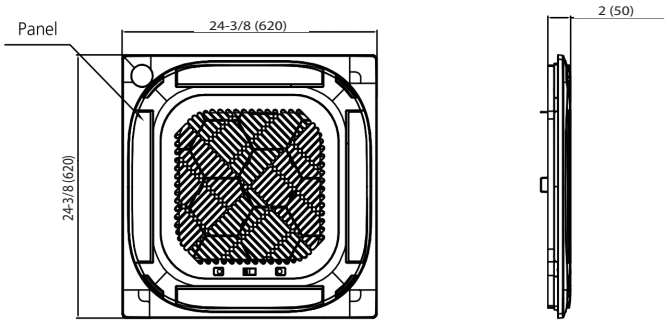

Fig. 3 – Panel Dimensions (Sizes 9K/12K-18K)

DIMENSIONS (CONT)

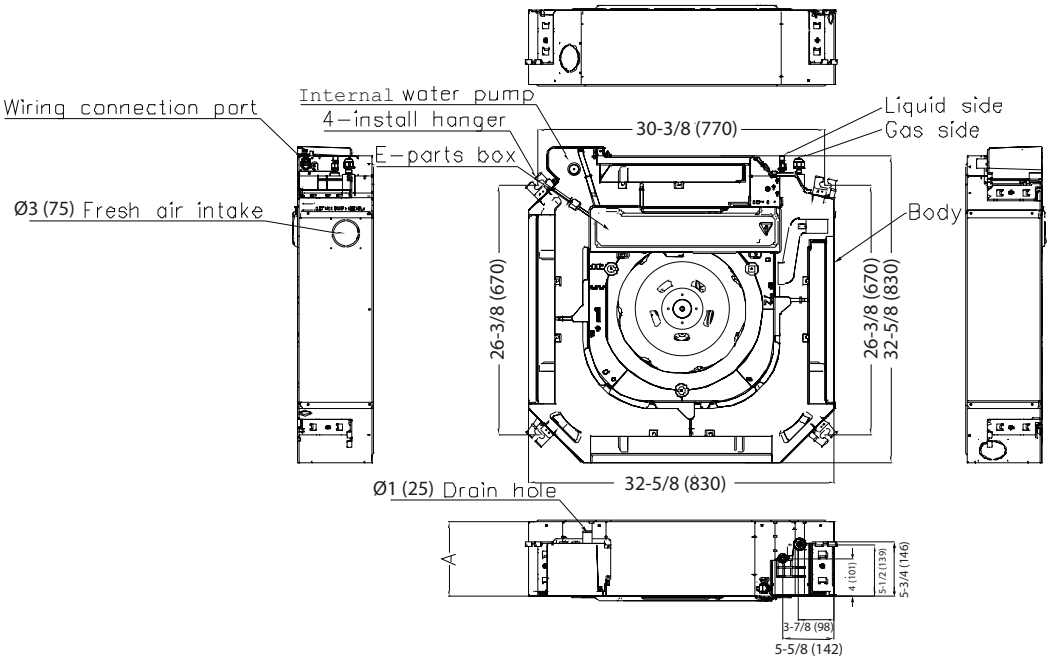

Capacity (Btu/h)	A (inch / mm)
24K	8-1/4 / 205
36K	9-5/8 / 245
48K	11-1/4 / 287

Fig. 4 – Indoor Unit (Sizes 24K-48K)

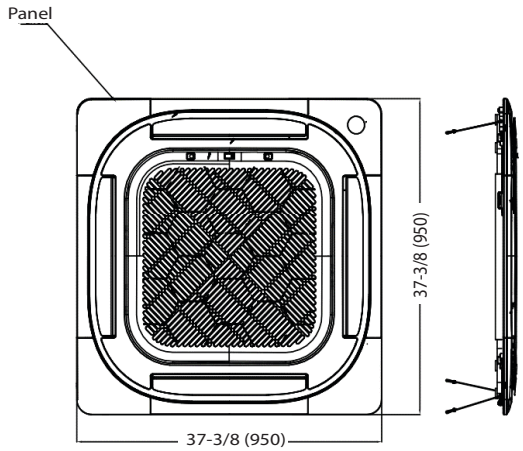

Fig. 5 – Panel Dimensions (Sizes 24K-48K)

CLEARANCES

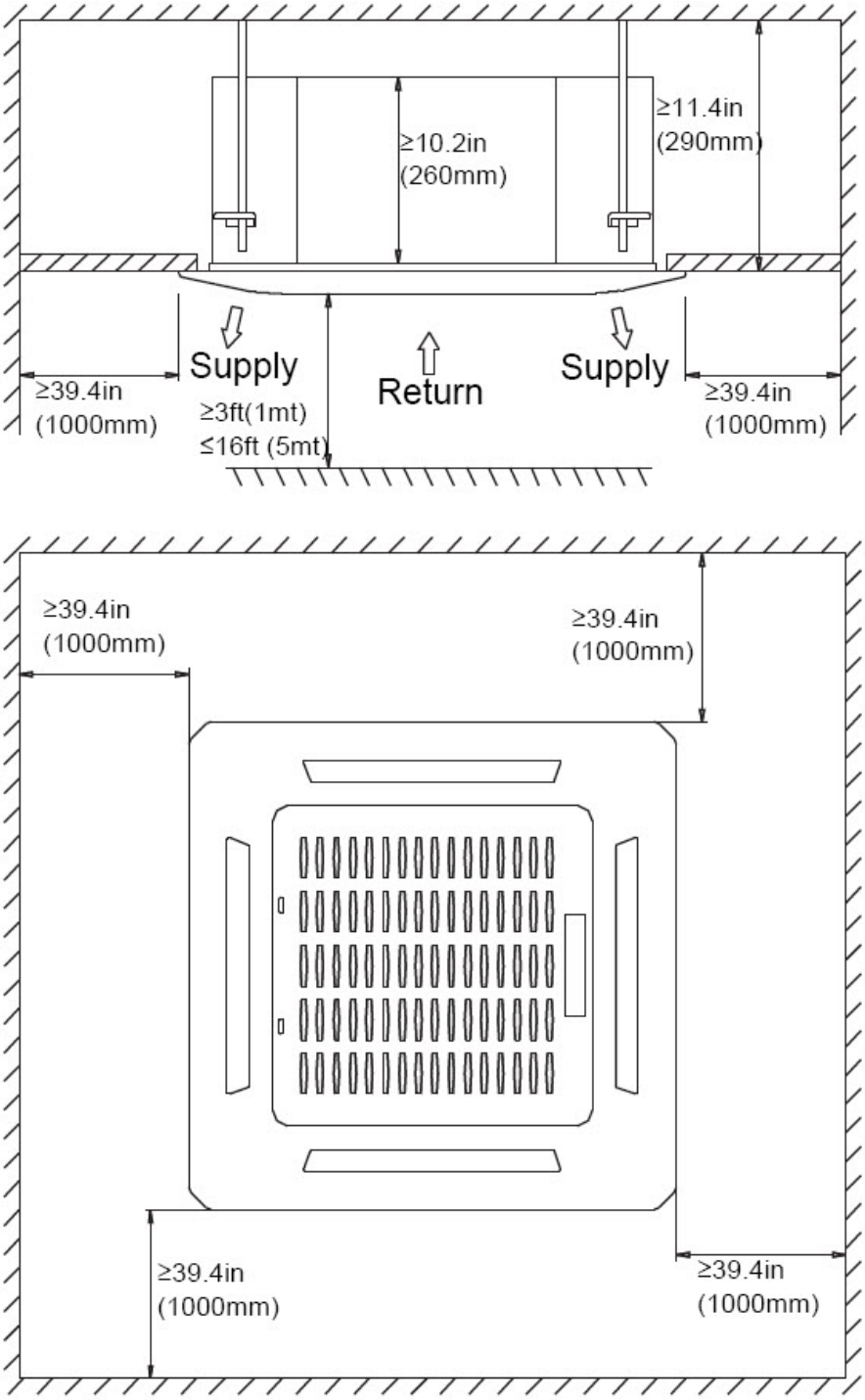

Fig. 6 – Clearances

SPECIFICATIONS

Size			9/12K	18K	24K	36K	48K
Indoor Model Number			**D5FSCAH12XAK**	**D5FSCAH18XAK**	**D5FSCAH24XAK**	**D5FSCAH36XAK**	**D5FSCAH48XAK**
Dimensions (Unit)	H	in	9-5/8	9-5/8	8-1/8	9-5/8	11-1/4
		mm	245	245	205	245	287
	W	in	22-1/2	22-1/2	32-5/8	32-5/8	32-5/8
		mm	570	570	830	830	830
	D	in	22-1/2	22-1/2	32-5/8	32-5/8	32-5/8
		mm	570	570	830	830	830
Unit Weight - Net		lbs	35.27	35.27	47.18	59.30	64.59
		kg	16	16	21.4	26.9	29.3
Dimensions (Packaging)	H	in	11-5/8	11-5/8	9-7/8	11-3/8	13
		mm	295	295	250	290	330
	W	in	28-1/8	28-1/8	35-7/8	35-7/8	35-7/8
		mm	715	715	910	910	910
	D	in	25-1/4	25-1/4	35-7/8	35-7/8	35-7/8
		mm	640	640	910	910	910
Weight with Packaging - Gross		lbs	41.89	41.89	59.08	71.43	76.06
		kg	19	19	26.8	32.4	34.5

ENC1 ROTARY SWITCH INSTRUCTIONS FOR CAPACITY CHANGE

ENC1 rotary switch is used for capacity change

When matching with single zone condensers, the indoor unit will automatically adjust to 9,000 BTU/H or 12,000 BTU/ according to condensers capacity.

When matching with multi-zone condensers, the ENC1 setting needs to be changed. Change the capacity of the indoor unit to 9,000 BTU/H by adjusting rotary switch ENC1 from “0” to “2”. Change the capacity of indoor unit to 12,000 BTU/H by adjusting the rotary switch ENC1 from “0” to “3”.

Power needs to be turned OFF BEFORE ROTARY SWITCH adjustment.

(Default setting “0”) (Change Dip switch to “2” for 9,000BUT/H)

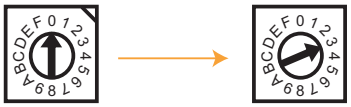

(Default setting “0”) (Change Dip switch to “3” for 12,000BUT/H)

APPLICATION DATA

UNIT SELECTION

Select equipment to either match or handle slightly less than the anticipated peak load. This provides better humidity control, fewer unit cycles, and less part-load operation.

For units used in spaces with high sensible loads, base equipment selection on the unit sensible load, not on the total anticipated load.

Adjust for anticipated room wet bulb temperature to avoid undersizing the equipment.

UNIT MOUNTING (INDOOR)

Refer to unit Installation Instructions for further details.

Unit leveling - For reliable operation, units should be level in all planes. Align and level the unit by adjusting the nuts and lock-nuts on the threaded hangers.

Clearance - A minimum of 12 inches (304.8 mm) of clearance is required in the false ceiling.

Unit location - Placing the unit in the center of the room provides the best air circulation and comfort. The unit return and discharge should not be obstructed by anything which may cause unit short cycling or air recirculation.

Installation Template - Fan coil units are supplied with a cardboard template to help match the position of the hangers, refrigerant lines, condensate drain pipe and power supply cable.

UNIT MOUNTING (OUTDOOR)

Refer to the unit’s Installation Instructions for further details. **DO NOT** install the indoor or outdoor units in a location with special environmental conditions. For those applications, contact your ductless representative.

SUPPORT

Adequate support must be provided to support the weight of all fan coils.

NOTE: Adequate support must be provided to support the weight of all indoor units.

For indoor unit weights and the base unit dimensional drawings for the location of the mounting brackets, refer to "SPECIFICATIONS" on page 8.

SYSTEM OPERATING CONDITIONS

OPERATING RANGE Min/Max °F (°C)		
	Cooling	Heating
Indoor DB	60 / 90 (16 / 32)	32 / 86 (0 / 30)

DRAIN CONNECTIONS

Install drains to meet the local plumbing codes. The in-ceiling cassette is supplied with a condensate lift pump that is capable of lifting the water 29.5in (750mm) above the top of the unit. A downward sloped condensate drain pipe can be used to dispose of water.

REFRIGERANT LINES

General Refrigerant Line Sizing:

1. The outdoor units are shipped with a full charge of R454B refrigerant.
2. Refrigerant lines should not be buried in the ground. If it is necessary to bury the lines, not more than 36-in (914 mm) should be buried. Provide a minimum 6-in (152 mm) vertical rise to the service valves to prevent refrigerant migration.
3. Both lines must be insulated. Use a minimum of 1/2-in. (12.7 mm) thick insulation. Closed-cell insulation is recommended in all long-line applications.
4. Special consideration should be given to isolating interconnecting tubing from the building structure. Isolate the tubing so that vibration or noise is not transmitted into the structure.

WIRING

All wires must be sized per NEC (National Electrical Code) or CEC (Canadian Electrical Code) and local codes. Use the Electrical Data table MCA (minimum circuit amps) and MOCP (maximum over current protection) to correctly size the wires and the disconnect fuse or breakers respectively.

Recommended Connection Method for Power and Communication Wiring for 9K-24K units.

The main power is supplied to the outdoor unit. The field supplied 14/3 stranded wire with ground with a 600 volt insulation rating, power/communication wiring from the outdoor unit to indoor unit consists of four (4) wires and provides the power for the indoor unit. Two wires are line voltage AC power, one is communication wiring (S) and the other is a ground wire. Wiring between indoor and outdoor unit is polarity sensitive. The use of BX wire is **NOT** recommended.

If installed in a high Electromagnetic field (EMF) area and communication issues exists, a 14/2 stranded shielded wire can be used to replace L2 and (S) between outdoor unit and indoor unit landing the shield onto ground in the outdoor unit only.

Sizes 36-48 Recommended Connection Method for Power and Communication Wiring

The main power is supplied to the outdoor unit.

The field supplied power wiring from the outdoor unit to the indoor unit consists of three (3) wires and provides the power for the indoor unit. Two wires are high voltage AC power and one is a ground wire.

To minimize voltage drop, the factory recommended wire size is 14/2 stranded with a ground.

Communication Wiring: A separate shielded stranded copper conductor only, with a 600 volt rating and double insulated copper wire, must be used as the communication wire from the outdoor unit to the indoor unit. Use a separate shielded 16GA stranded control wire.

See "Wiring Connection Labels" Fig. 13 and Fig. 14.

CAUTION

EQUIPMENT DAMAGE HAZARD

Failure to follow this caution may result in equipment damage or improper operation. Wires should be sized based on NEC and local codes.

CAUTION

EQUIPMENT DAMAGE HAZARD

Failure to follow this caution may result in equipment damage or improper operation.

Be sure to comply with local codes while running wire from the indoor unit to the outdoor unit.

Every wire must be connected firmly. Loose wiring may cause the terminal to overheat or result in unit malfunction. A fire hazard may also exist. Ensure all wiring is tightly connected.

No wire should touch the refrigerant tubing, compressor or any moving parts.

Disconnecting means must be provided and shall be located within sight and readily accessible from the air conditioner.

Connecting cable with conduit shall be routed through the hole in the conduit panel.

CONTROL SYSTEM

The indoor unit is equipped with a microprocessor control to perform two functions:

1. Provide safety for the system
2. Control the system and provide optimum levels of comfort and efficiency.

The main microprocessor is located on the control board of the fan coil unit (outdoor units have a microprocessor also) with thermistors located in the fan coil air inlet and on the indoor coil. Heat pump units have a thermistor on the outdoor coil. These thermistors monitor the system's operation to keep the unit within acceptable parameters and control the operating mode.

WIRELESS REMOTE CONTROLLER

Fig. 7 – Wireless Remote Controller (RG10L5(2HS))

1. A wireless remote control is supplied for system operation of all in−ceiling cassette units.

2. Each battery operated wireless (infrared) remote control may be used to control more than one unit.

WIRED REMOTE CONTROLLER (OPTIONAL)

Fig. 8 – Wired Remote Controller (KSACN1401AAA)

1. Optional wired remote controller used for system operation of all in-ceiling cassette units.
2. Kit includes a wired remote controller and a connecting cable.
3. Connect the wire terminal between the remote controller and the indoor unit.
4. Display in °F or °C.

NOTE: 4-core extension (part number: 17401204000769).

SOUND PRESSURE

SYSTEM SIZE		9/12K	18K	24K	36K	48K
Indoor Sound Pressure Level dBa	High	43.5	44.5	45.0	52.0	52.0
	Medium	40.5	41	42.5	47.5	49.5
	Low	27.5	27.5	33.5	40.0	41.5
	Silent	26.0	23.5	29.5	38.0	38.0

SOUND PRESSURE TESTING METHOD

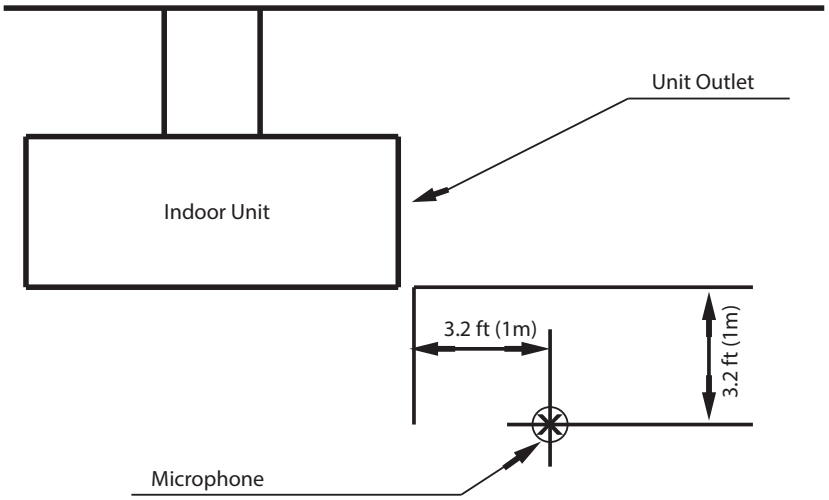

Fig. 9 – Sound Pressure Testing Method

AIR FLOW DATA

SYSTEM SIZE		9K/12K	18K	24K	36K	48K
Airflow Data CFM	HIGH	364.92	388.7	706.3	947.62	1118.3
	MEDIUM	306.06	318.0	635.67	853.44	1024.13
	LOW	194.23	194.3	547.38	753.38	806.36

AIR THROW DATA

Air Throw Data	ft(m)	9.84(3)	9.84(3)	13.12(4)	14.76(4.5)	14.76(4.5)

MOISTURE REMOVAL

Moisture Removal	L/h	1.45	2	2.36	4.3	6.13

PIPING SPECIFICATIONS

NAME	MODEL	LIQUID SIDE	GAS SIDE	REMARKS
Connecting Pipe Assembly	9K	Ø1/4in (Ø6.35mm)	Ø3/8in (Ø9.52mm)	Pipes are not included in the accessories so you will need to purchase them from the local dealer.
	12K	Ø1/4in (Ø6.35mm)	Ø3/8in (Ø9.52mm)	
	18K	Ø1/4in (Ø6.35mm)	Ø1/2in (Ø12.7mm)	
	24K	Ø3/8in (Ø9.52mm)	Ø5/8in (Ø16mm)	
	36K	Ø3/8in (Ø9.52mm)	Ø3/4in (Ø19mm)	
	48K	Ø3/8in (Ø9.52mm)	Ø3/4in (Ø19mm)	

FAN AND MOTOR SPECIFICATIONS

Size			9K/12K	18K	24K	36K	48K
Indoor Model Number			D5FSCAH12XAK	D5FSCAH18XAK	D5FSCAH24XAK	D5FSCAH36XAK	D5FSCAH48XAK
INDOOR FAN SPECIFICATIONS	Material	-	AS-GF20				
	Type	-	LX-322*147.5*12-7N(A)	LX-322*147.5*12-7N(A)	LX-476*125*12-7	LX-476*148*12-7NA	LX-476*170*12-7NA
	Diameter	inch/mm	12.7/322	12.7/322	18.7/476	18.7/476	18.7/476
	Height	inch/mm	5.8/147.5	5.8/147.5	4.9/125	5.8/148	6.7/170
INDOOR MOTOR SPECIFICATIONS	Model	-	ZKFN-45-8-2	ZKFN-45-8-2	ZKFN-45-8-1	ZKFN-125-8-1	ZKFN-125-8-1
	Type	-	DC				
	Output	W	45	45	45	125	125
	FLA	A	0.92	1	1	1	1.5
	Rated HP	HP	0.06	0.06	0.06	0.17	0.17
	Range of current	Amps	0.15	0.15	0.71	1.61	1.61
	Rated current	Amps	0.15	0.15	0.71	1.61	1.61
	Speed	rev/min	700/600/400	800/750/700	624/568/426	696/632/568	736/664/524
	Rated RPM	rev/min	700	800	624	696	736
	Insulation class	-	B				
	Safe class	-	IP20				

INDOOR REFRIGERANT COIL SPECIFICATIONS

Size		12K	18K	24K	36K	48K
Indoor Model Number		D5FSCAH12XAK	D5FSCAH18XAK	D5FSCAH24XAK	D5FSCAH36XAK	D5FSCAH48XAK
Number of rows	Rows	2	2	2	3	3
Tube outside diameter	inch	0.276				
	mm	Φ7				
Nominal Tube Wall	Inch (mm)	0.009(0.23)				
Tube Enhancement	(Yes/No)	Yes				
Tube Material		Copper				
Tube pitch(a) x row pitch (b)	inch	0.83x0.53				
	mm	21x13.37				
Fin Spacing	FPI	20				
	mm	1.3				
Fin type		Louvered				
Fin Material		Gold hydrophilic aluminum				
Coil length x height x width	inch	54.13*8.27*0.53+51.38*8.27*0.53	54.13*8.27*0.53+51.38*8.27*0.53	84.06*6.61*1.05	84.06*8.27*1.58	38.58*9.92*1.58+38.58*9.92*1.58
	mm	1375*210*13.37+1305*210*13.37	1375*210*13.37+1305*210*13.37	2135x168x26.74	2135x210x40.11	980x252x40.11+980x252x40.11
Face area	ft2	2.95	2.95	3.86	4.83	5.32
Number of circuits	#	4	4	4	10	10

Manufacturer reserves the right to change, at any time, specifications and designs without notice and without obligations.

WIRING DIAGRAMS

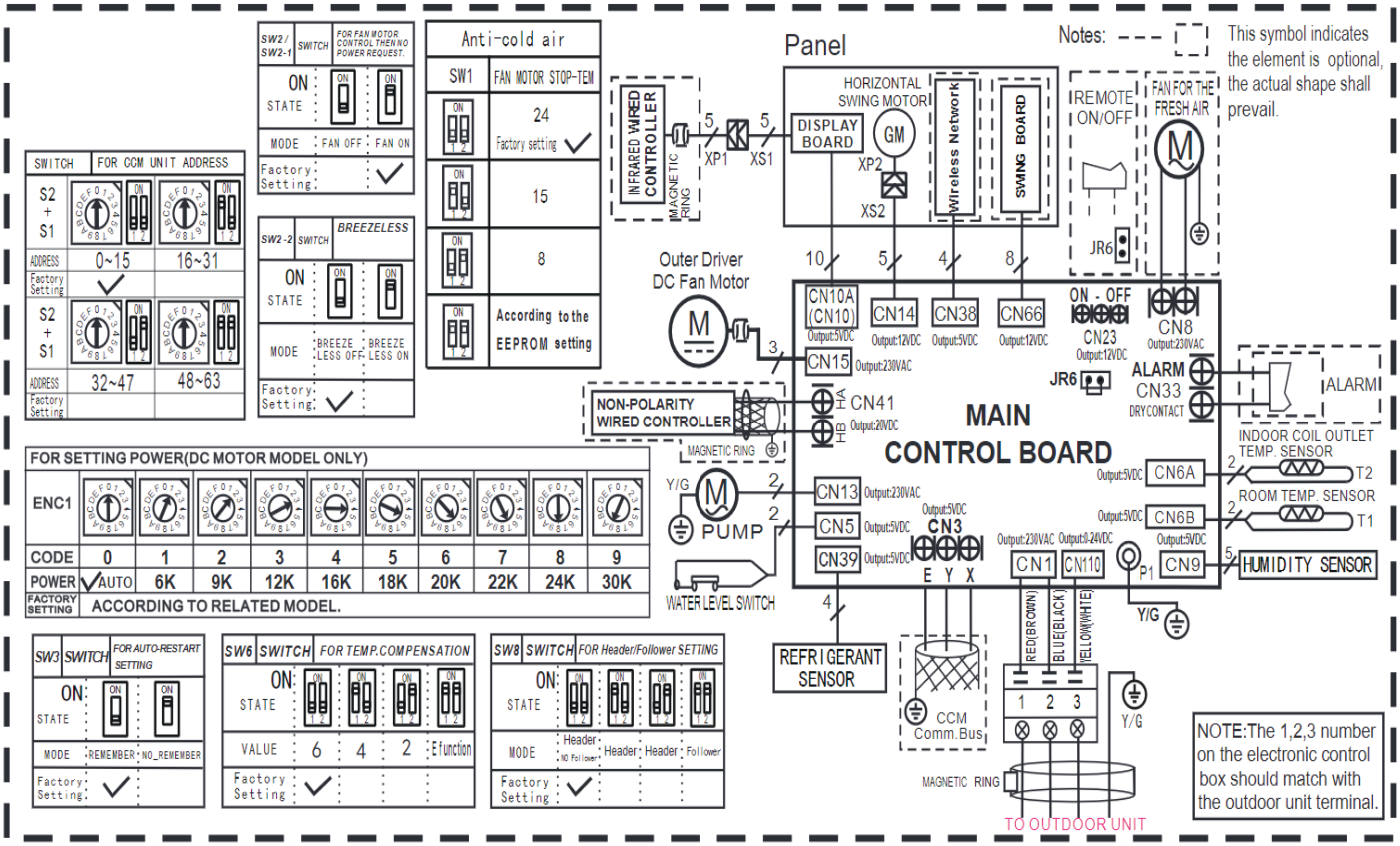

Fig. 10 – Wiring Diagram (Sizes 09K-18K)

NOTE: The Rotary Switch ENC1 can be changed from 12K to 9K to create the 9K size unit.

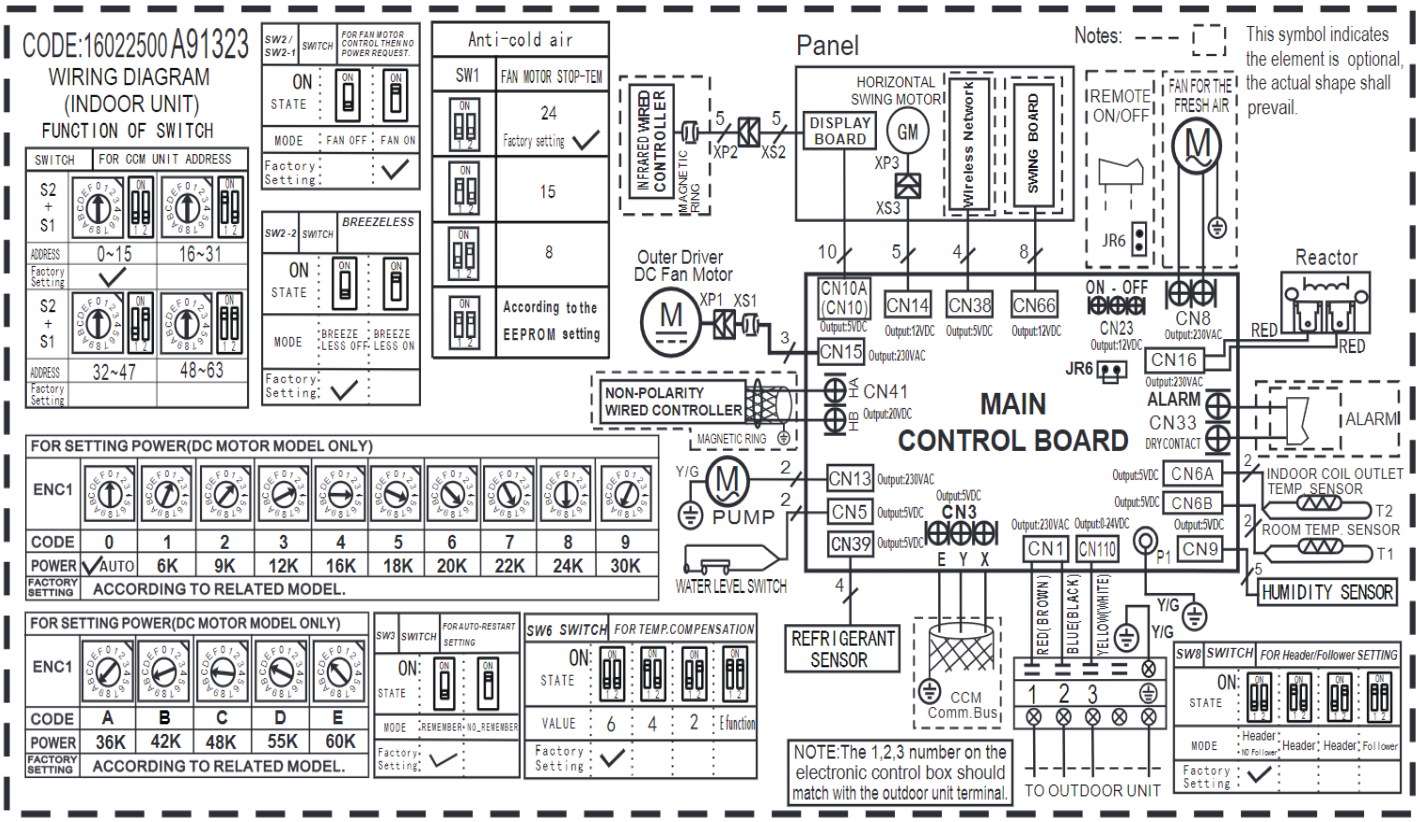

Fig. 11 – Wiring Diagram (Size 24K)

WIRING DIAGRAMS (CONT.)

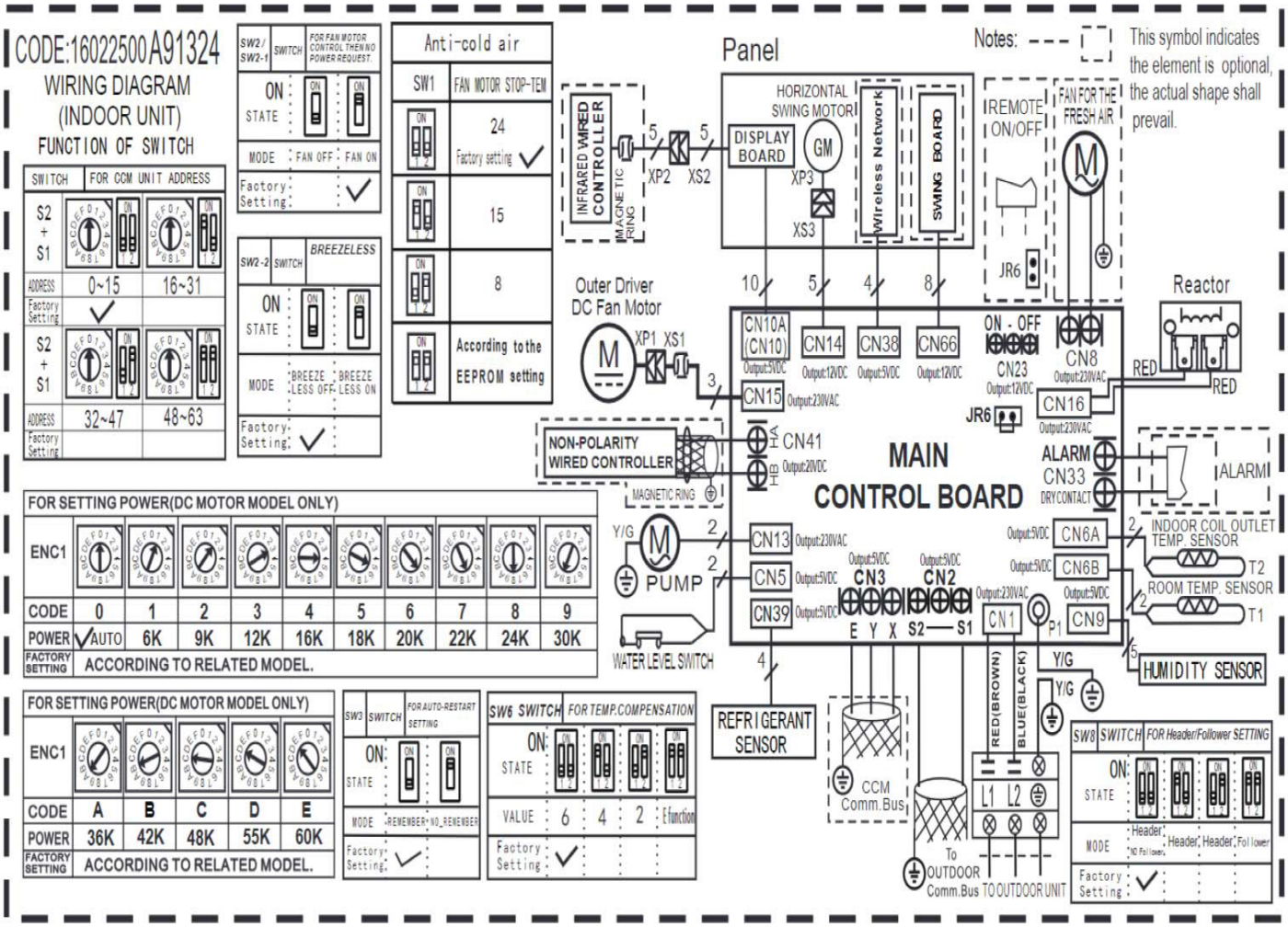

Fig. 12 – Wiring Diagram (Size 36K-48K)

WIRING CONNECTION LABELS

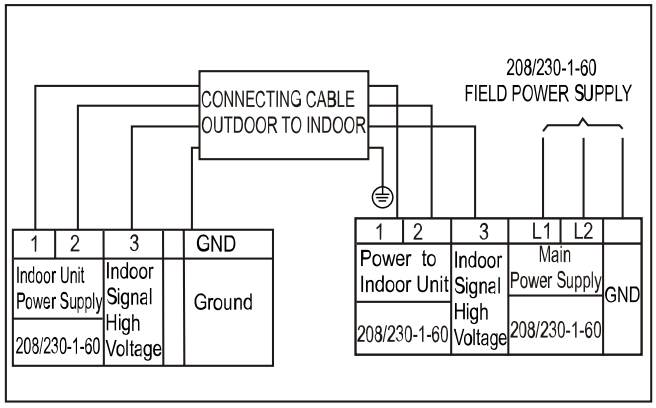

1	2	3	GND
Indoor Unit Power Supply		Indoor Signal High Voltage	Ground
208/230-1-60			

Fig. 13 – 09K-24K Labels

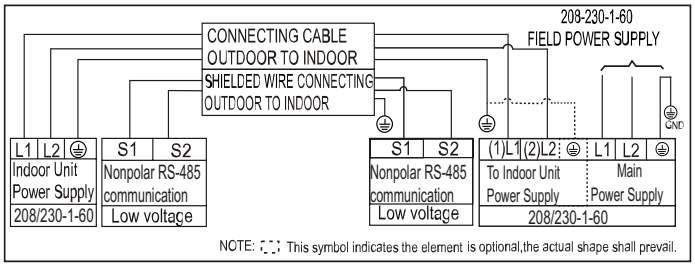

L1	L2	GND
Power to Indoor Unit		Ground
208/230-1-60		

Fig. 14 – 36K-48K Label

WIRING CONNECTIONS

System Size	9K/12K	18K	24K	36K	48K
V-Ph-Hz	208/230-1-60				
Power Supply	3Wires: includes ground wire (Outdoor); 208/230V-1Ph-60Hz				
Interconnection to Indoor Unit	Yes				
Shielded Wire (Yes/No)	Optional			Yes	

ELECTRICAL DATA

System Size		9K/12K	18K	24K	36K	48K
Power Supply	V-Ph-Hz	208/230-1-60				
Minimum Circuit Ampacity (MCA)	A	3	3	3	3	3
Maximum Overcurrent Protection Ampacity (MOPA)	A	15	15	15	15	15
Min – Max Voltage Range	V	187-253				

PERFORMANCE RATINGS

NOTE: Please see the Outdoor Unit Product Databook (37MAHA-01PD)

REFRIGERANT SYSTEM DIAGRAM

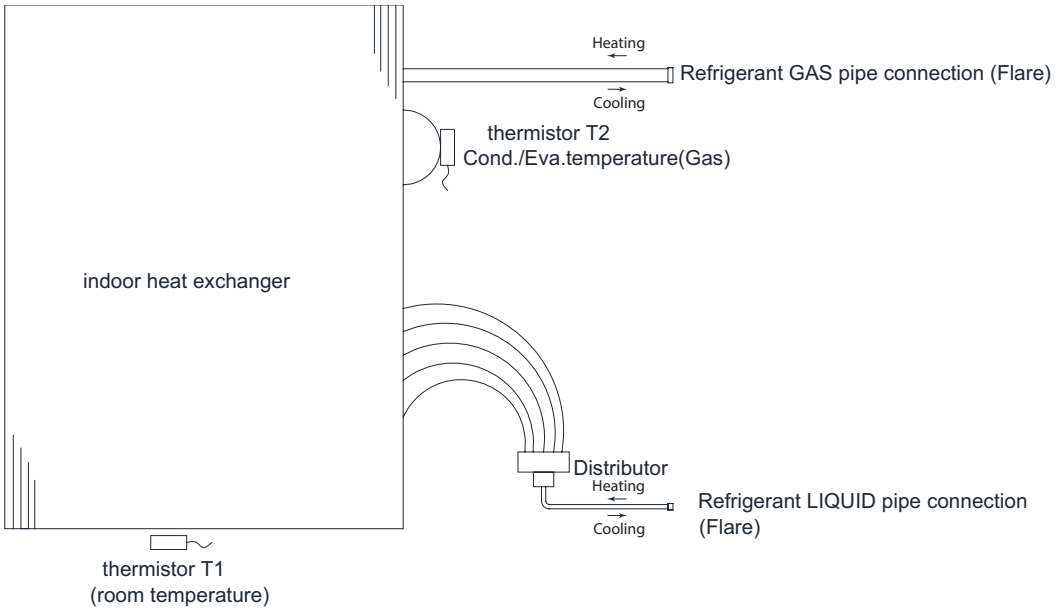

Fig. 15 – Refrigerant System Diagram

NOISE CURVES

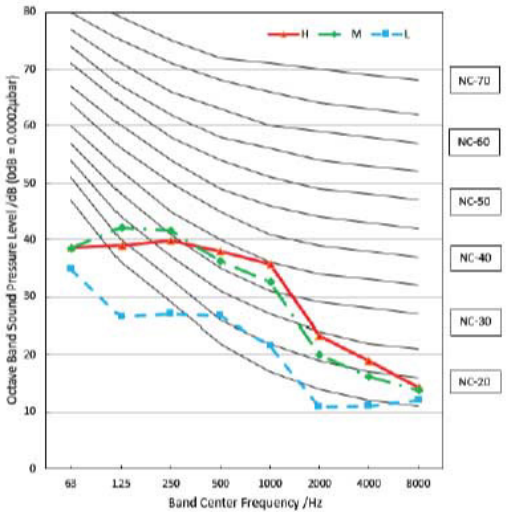

Fig. 16 – Size 09K

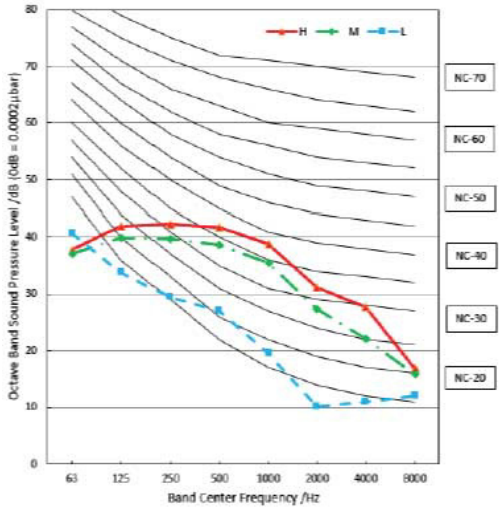

Fig. 17 – Size 12K

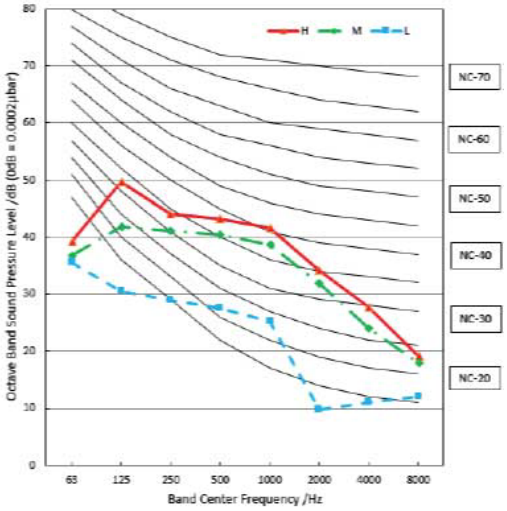

Fig. 18 – Size 18K

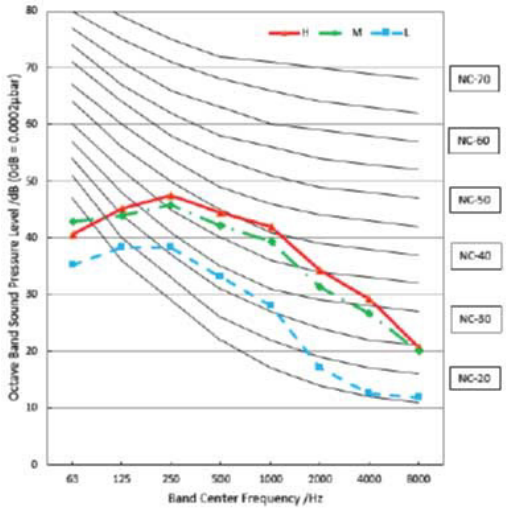

Fig. 19 – Size 24K

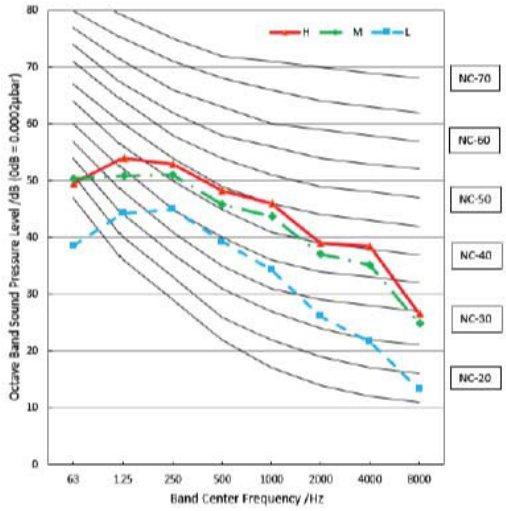

Fig. 20 – Size 36K

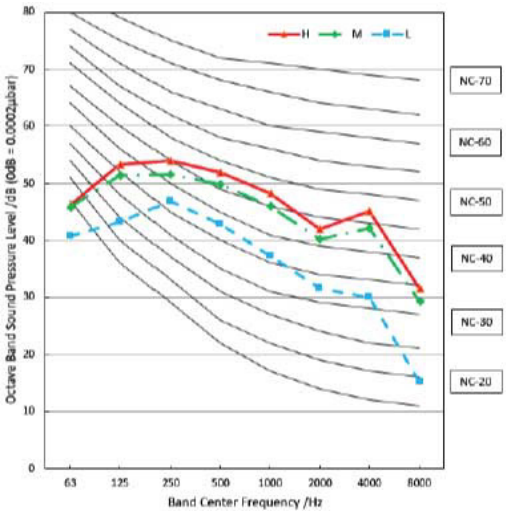

Fig. 21 – Size 48K

GUIDE SPECIFICATIONS

INDOOR IN-CEILING CASSETTE DUCTLESS UNITS

Size Range: 3/4 to 4 Ton Nominal Cooling and Heating Capacity
Model Number: **D5FSCA**

Part 1 - GENERAL

1.01 System Description

Indoor, in−ceiling cassette, direct−expansion fan coils are matched with a heat pump outdoor unit.

1.02 Agency Listings

Unit are rated per AHRI Standards 210/240 and listed in the AHRI directory as a matched system.

1.03 Delivery, Storage, And Handling

Units are stored and handled per the unit manufacturer's recommendations.

1.04 Warranty (For Inclusion By Specifying Engineer)

Part 2 - PRODUCTS

2.01 Equipment

A. General:

Indoor, direct-expansion, ceiling-mounted fan coil. Unit is complete with a cooling/heating coil, fan, fan motor, piping connectors, electrical controls, microprocessor control system, and an integral temperature sensing.

B. Unit Cabinet:

Cabinet is constructed of zinc-coated steel. Fully insulated discharge and inlet grilles are attractively styled, high-impact polystyrene. Grille has hinges and can be opened to obtain access to the cleanable filters, indoor fan motor and control box.

C. Fans:

1. The fan is a centrifugal direct-drive blower type with an air intake in the center of the unit and a discharge at the perimeter. An automatic, motor-driven vertical air sweep is provided standard. Automatic motor-driven louvers are provided standard and are adjustable for a 4-way discharge.
2. The air sweep operation is user selectable.

D. Coil:

The coil is a copper tube with aluminum fins and galvanized steel tube sheets. Fins are bonded to the tubes by mechanical expansion and specially golden hydrophilic pre-coated for enhanced wet-ability. A drip pan under the coil has a factory installed condensate lift pump and a drain connection for a hose attachment to remove condensate.

E. Motors:

Motors are open drip-proof, permanently lubricated ball bearing with inherent overload protection. Fan motors are 7-speed.

F. Controls:

Controls consist of a microprocessor-based control system which controls the space temperature, determines the optimum fan speed, and runs self diagnostics. The temperature control range is 62°F to 86°F (17°C to 30°C) in increments of 1°F or 1°C, and has a 46°F Heating Mode (Heating Setback). The wireless remote controller, has the ability to act as the temperature sensing location for room comfort.

The unit has the following functions (at a minimum):

1. An automatic restart after a power failure at the same operating conditions as at failure.
2. A timer function to provide a minimum 24-hour timer cycle for the system's Auto Start/Stop.
3. Temperature-sensing controls sense the return air temperature.
4. Indoor coil freeze protection.
5. Wireless infrared remote control to enter set points and operating conditions.
6. Automatic air sweep control to provide on or off activation of air sweep louvers.
7. Dehumidification mode which provides increased latent removal capability by modulating system operation and set point temperature.
8. A fan-only operation to provide room air circulation when no cooling is required.
9. Diagnostics to provide continuous checks of the unit operation and warn of possible malfunctions. Any error messages are displayed at the unit.
10. The fan speed control is user-selectable: high, medium, low, or microprocessor controlled automatic operation during all operating modes.
11. Automatic heating-to-cooling changeover in the heat pump mode. Control includes deadband to prevent rapid mode cycling between heating and cooling.
12. Indoor coil high temperature protection is provided to detect excessive indoor discharge temperature when unit is in the heat pump mode..

G. Filters:

The unit has a filter track with factory-supplied cleanable filters.

H. Electrical Requirements:

The indoor fan motor operates on 208-230V on model sizes 09-48, as specified. Power is supplied from the outdoor unit.

I. Operating Characteristics:

The **D5FSCA** system has a minimum SEER2 (Seasonal Energy Efficiency Ratio) and HSPF2 at AHRI conditions, as listed on the specifications table.

J. Refrigerant Lines:

All units should have refrigerant lines that can be oriented to connect from the left, right or back of unit. Both refrigerant lines must be insulated.

K. Leak Mitigation

The unit is equipped with a refrigerant leak detection sensor.

© 2025 Carrier. All rights reserved.

Manufacturer reserves the right to change, at any time, specifications and designs without notice and without obligations.