H5H8T
2-Stage Heat Pump with R-454B Refrigerant 2 To 5 Tons

Arcoaire®
Air Conditioning & Heating

Product Specifications

This unit has been designed utilizing non-ozone depleting and low global warming potential R-454B refrigerant.
Heat pumps with R-454B refrigerant provide a collection of features unmatched by any other family of equipment.

NOTE: Ratings contained in this document are subject to change at any time. Always refer to the AHRI directory (www.ahridirectory.org) for the most up-to-date ratings information.

ion BLACK

AHRI CERTIFIED www.ahridirectory.org
Use of the AHRI Certified TM Mark indicates a manufacturer's participation in the program For verification of certification for individual products, go to www.ahridirectory.org.

Certified System
Quality ISO 9001
SAI GLOBAL

UL C US

ENERGY STAR
The ENERGY STAR mark indicates that a product meets the most Energy Star-qualified energy efficiency when properly installed and maintained. Proper installation, proper refrigerant charge and airflow are the keys to achieve rated equipment efficiency. Installation of equipment that is not properly sized, improper refrigerant charge, and airflow are the most common causes of poor performance. Improper installation and improper charge and airflow may reduce energy efficiency and shorten equipment life.

Industry leading Features / Benefits

Efficiency
- Up to 18.5 SEER2 / Up to 14 EER2 / Up to 8.5 HSPF2
- Indoor air quality accessories available

Sound
- Sound level as low as 65 dBA

Comfort
- System supports Thermidistat or standard 2-stage thermostat controls
- System supports fully communicating installation utilizing Ion™ Black System Control and compatible fan coil or furnace.

Reliability
- Non-ozone depleting and low global warming potential R-454B refrigerant
- Front-seating service valves
- 2-stage scroll compressor
- Internal pressure relief valve
- Internal thermal overload
- High pressure switch
- Loss of charge switch
- Filter drier
- Balanced refrigeration system for maximum reliability

Durability
- Protection Package: Solid, durable sheet metal construction
- Baked-on, complete outer coverage, powder paint

Applications
- Long-line - up to 250 feet (76.2 m) total equivalent length, up to 200 feet (60.96 m) condenser above evaporator, or up to 80 ft. (24.38 m) evaporator above condenser (See Long Line Guide for more information.)
- Low ambient cooling (down to 0°F / -17.8°C) with approved low ambient accessory kits.

MODEL NUMBER NOMENCLATURE

H	5	H	8	T	24	A	K	A	A	A
Brand	**Refrigerant**	**Type**	**SEER2**	**OD Design Type**	**Nominal Capacity**	**Feature**	**Voltage**	**Special Feature**	**Region**	**Major Series**
H= Ion™ Arcoaire	**5**= R-454B	**H** = HP	**8**= 18 SEER2	**T** = Two Stage	**24** = 2 Tons **36** = 3 Tons **48** = 4 Tons **60** = 5 Tons	A = Standard	K = 208--230-60-1	A = Standard	A = Standard HP	A = Initial

CATALOG ORDERING NUMBERS

Size	Catalog Order Number
24	H5H8T24AKAAA
36	H5H8T36AKAAA
48	H5H8T48AKAAA
60	H5H8T60AKAAA

STANDARD FEATURES

FEATURES	Unit Size			
	24	**36**	**48**	**60**
R-454B Refrigerant	X	X	X	X
Maximum SEER2 Rating*	18.5	17	18	17.5
2-Stage Scroll Compressor	X	X	X	X
Low Ambient Cooling Capability with Approved Kits	X	X	X	X
Crankcase Heater w/Temperature Switch incorporated into control board	X	X	X	X
Factory Provided, Field Installed Filter Drier	X	X	X	X
Front Seating Service Valves	X	X	X	X
Internal Pressure Relief Valve	X	X	X	X
Internal Thermal Overload	X	X	X	X
Long Line capability	X	X	X	X
Loss of Charge Switch	X	X	X	X
High Pressure Switch	X	X	X	X
Compressor Sound Blanket	X	X	X	X

X = Standard
* With approved combinations

PHYSICAL DATA

UNIT SIZE	24	36	48	60
Compressor Type	Scroll			
Refrigerant	R-454B Refrigerant			
Charge lb (kg)*	10.14 (4.60)	12.70 (5.76)	11.09 (5.03)	11.86 (5.38)
Outdoor Htg Piston #	42	49	61	67
COND Fan	Forward Swept Propeller Type, Direct Drive			
Air Discharge	Vertical			
Air Qty (CFM)	3120	3788	4781	4781
Motor HP	1/3	1/3	1/3	1/3
Motor RPM	615	700	815	815
COND COIL				
Face Area (Sq ft)	22.6	25.1	30.1	30.1
Fins per In.	20	20	20	20
Rows	2	2	2	2
Circuits	9	8	12	12
VALVE CONNECT. (In. ID)				
Vapor	3/4	7/8	7/8	7/8
Liquid	3/8"			
REFRIGERANT TUBES† (In. OD)				
Vapor (0-80 Ft Tube Length)	3/4	7/8	1 1/8	1 1/8
Liquid (0-80 Ft Tube Length)	3/8"			

*. For 15 ft (4.6 m) of lineset length.

†. Units are rated with 25 ft (7.6 m) of lineset length. See Vapor Line Sizing and Cooling Capacity Loss table when using other sizes and lengths of lineset.

Manufacturer reserves the right to change, at any time, specifications and designs without notice and without obligations.

REFRIGERANT PIPING LENGTH LIMITATIONS

Maximum Line Lengths:

The maximum allowable total equivalent length for heat pumps varies depending on the vertical separation. See the tables below for allowable lengths depending on whether the outdoor unit is on the same level, above or below the outdoor unit.

Maximum Line Lengths for Heat Pump Applications

	MAXIMUM ACTUAL LENGTH* ft (m)	MAXIMUM EQUIVALENT LENGTH ft (m)	MAXIMUM VERTICAL SEPARATION ft (m)
Units on equal level	200 (61)	250 (76.2)	N/A
Outdoor unit ABOVE indoor unit	200 (61)	250 (76.2)	200 (61)
Outdoor unit BELOW indoor unit	See Table 'Maximum Total Equivalent Length -Outdoor Unit BELOW Indoor Unit'		

* Maximum actual length not to exceed 200 ft (61 m)

Maximum Total Equivalent Length* - Outdoor Unit BELOW Indoor Unit

Size	Liquid Line Diameter w/ TXV	HP with R-454B Refrigerant - Maximum Total Equivalent Length Vertical Separation ft (m) Outdoor unit BELOW indoor unit						
		0-20 (0 - 6.1)	21-30 (6.4 - 9.1)	31-40 (9.4 - 12.2)	41-50 (12.5 - 15.2)	51-60 (15.5 - 18.3)	61-70 (18.6 - 21.3)	71-80 (21.6 - 24.4)
24	3/8	250*	250*	250*	250*	250*	250*	250*
36	3/8	250*	250*	250*	250*	250*	250*	250*
48	3/8	250*	250*	250*	250*	230	160	—
60	3/8	250*	225*	190	150	110	—	—

* Total equivalent length accounts for losses due to elbows or fitting. See the Long Line Guideline for details.
— = outside acceptable range

LONG LINE APPLICATIONS

An application is considered Long Line, when the refrigerant level in the system requires the use of accessories to maintain acceptable refrigerant management for systems reliability. Defining a system as long line depends on the liquid line diameter, actual length of the tubing, and vertical separation between the indoor and outdoor units.

For heat pump systems, the chart below shows when an application is considered Long Line.

Table 1 – HP with R-454B Refrigerant Long Line Description ft (m) (Beyond these lengths, long line accessories are required)

Liquid Line Size	Units On Same Level	Outdoor Below Indoor	Outdoor Above Indoor
3/8 + TXV	80 (24.4)	20 (6.1) vertical or 80 (24.4) total	80 (24.4)

NOTE: See Residential Piping and Long Line Guideline for details

VAPOR LINE SIZING AND COOLING CAPACITY LOSS

Acceptable vapor line diameters provide adequate oil return to the compressor while avoiding excessive capacity loss. The suction line diameters shown in the chart below are acceptable for HP systems with R-454B refrigerant:

Unit Nominal Size	Maximum Liquid Line Diameters (In.) OD	Vapor Line Diameters (In.) OD	Cooling Capacity Loss (%) Total Equivalent Line Length ft. (m)								
			Standard Application		Long Line Application Requires Accessories						
			26-50 (7.9-15.2)	51-80 (15.5-24.4)	81-100 (24.7-30.5)	101-125 (30.8-38.1)	126-150 (38.4-45.7)	151-175 (46.0-50.3)	176-200 (53.6-60.0)	201-225 (61.3-68.6)	226-250 (68.9-76.2)
24	3/8	5/8	0	1	1	2	3	3	4	4	5
		3/4	0	1	1	1	1	1	1	1	1
36	3/8	5/8	1	2	4	5	6	7	9	10	11
		3/4	0	0	1	1	2	2	3	3	4
		7/8	0	0	—	—	—	—	—	—	—
48	3/8	3/4	1	2	2	3	4	5	6	7	7
		7/8	0	1	1	2	2	2	3	3	4
		1-1/8	0	0	—	—	—	—	—	—	—
60	3/8	3/4	1	2	4	5	6	8	9	10	11
		7/8	0	1	2	2	3	4	4	5	5
		1-1/8	0	0	—	—	—	—	—	—	—

Standard Length = 80 ft. (24.4 m) or less total equivalent length

Applications in this area are long line. Accessories are required as shown recommended on Long Line Application Guidelines

Applications in this area may have height restrictions that limit allowable total equivalent length, when outdoor unit is below indoor unit.

— Applications in this area are not recommended due to insufficient oil return.

AHRI RATINGS

For AHRI ratings certificates, please refer to the AHRI directory www.ahridirectory.org
Additional ratings and system combinations can be accessed via the Ratings Database here: Arcoaire Ratings

NOTE: Any ratings contained in this document are subject to change at any time.

Electrical Data

UNIT SIZE	V/PH	OPER VOLTS*		COMPR		FAN	MCA	MAX FUSE† or CKT BRK AMPS
		MAX	MIN	LRA	RLA	FLA		
24	208-230/1	253	197	62.0	15.6	2.60	22.1	25
36				90.0	18.5	2.60	25.7	40
48				138.0	23.0	2.60	31.4	50
60				149.0	25.8	2.60	34.9	60

* Permissible limits of the voltage range at which the unit will operate satisfactorily
† Time-Delay fuse.
FLA- Full Load Amps
LRA - Locked Rotor Amps
MCA- Minimum Circuit Amps
RLA- Rated Load Amps
NOTE: Control circuit is 24-V on all units and requires external power source. Copper wire must be used from service disconnect to unit.
All motors/compressors contain internal overload protection.
Complies with 2010 requirements of ASHRAE Standards 90.1
Short Circuit Current Rating (SCCR): 5kA rms

A-Weighted Sound Power (dBA)

UNIT SIZE	STANDARD RATING	TYPICAL OCTAVE BAND SPECTRUM (without tone adjustment)						
		125	250	500	1000	2000	4000	8000
24	67 - High Stage	67	63	64	70	57	51	48
	65 - Low Stage	66	63	63	67	53	49	43
36	68 - High Stage	68	63	64	66	59	52	47
	66 - Low Stage	66	62	63	63	55	51	46
48	70 - High Stage	67	65	65	66	61	58	54
	69 - Low Stage	66	65	65	66	61	57	53
60	72 - High Stage	69	70	71	67	61	58	53
	69 - Low Stage	69	66	67	66	60	57	52

NOTE: Tested in compliance with AHRI Standard 270 but not listed with AHRI.

Charging Subcooling (TXV-Type Expansion Device)

UNIT SIZE	REQUIRED SUBCOOLING °F (°C)
24	7 (3.9)
36	10 (5.6)
48	10 (5.6)
60	10 (5.6)

Manufacturer reserves the right to change, at any time, specifications and designs without notice and without obligations.

Accessories

Kit Number	KIT NAME	24	36	48	60
NASA00201FS	Evaporator Freeze Stat	X	X	X	X
NASA001TD	Time Delay Relay	X	X	X	X
NASA501LA	Low Ambient	X	X	X	X
NASA00201IK	Isolation Relay	X	X	X	X
NASA012SC	Hard Start	X	X	X	
NASA010SC	Hard Start				X
NASA00201SF	Support Feet	X	X	X	X
NASA001LS	Solenoid Valve	X	X	X	X
NASA00106SS	Snow Stand	X	X	X	X

X = Accessory

ACCESSORY USAGE GUIDELINE

Accessory	Required for Low Ambient cooling Applications (Below 55°F / 12.8°C)	Required for Long Line Applications*	Required for Sea Coast Applications (within 2 miles/3.2 km)
Compressor Start Assist	Yes	Yes	No
Crankcase Heater	Standard	Standard	Standard
Evaporator Freeze Thermostat	Yes	No	No
Isolation Relay	Yes	No	No
Hard Shutoff TXV	Yes (Standard with Factory Indoor Coils)	Yes (Standard with Factory Indoor Coils)	Yes (Standard with Factory Indoor Coils)
Liquid Line Solenoid Valve	No	See Residential Piping and Long Line Guideline	No
Low-Ambient Control	Yes	No	No
Support Feet	Recommended	No	Recommended

* For tubing line sets between 80 and 200 ft. (24.38 and 60.96 m) and/or 20 ft. (6 m) vertical differential, refer to Residential Piping and Long Line Guideline.

Accessory Description and Usage (Listed Alphabetically)

1. Compressor Start Assist - Capacitor and Relay

Start capacitor and relay gives a ”hard” boost to compressor motor at each start up.

Usage Guideline:

Required for single phase scroll compressors in the following applications:

Long line

Low ambient cooling

Suggested for all compressors in areas with a history of low voltage problems.

2. Crankcase Heater

An electric resistance heater which mounts to the base of the compressor to keep the lubricant warm during off cycles. Improves compressor lubrication on restart and minimizes the chance of liquid slugging.

Usage Guideline:

Required in low ambient cooling applications.

Required in long line applications.

Suggested in all commercial applications.

3. Evaporator Freeze Thermostat

An SPST temperature-actuated switch that stops unit operation when evaporator reaches freeze-up conditions.

Usage Guideline:

Required when low ambient kit has been added.

4. Liquid-Line Solenoid Valve (LLS)

An electrically operated shutoff valve which stops and starts refrigerant liquid flow in response to compressor operation. It is to be installed at the outdoor unit to control refrigerant off cycle migration in the heating mode.

Usage Guideline:

An LLS is required in all long line heat pump applications to control refrigerant off cycle migration in heating mode. See Long Line Guideline.

Suggested for all commercial applications.

5. Low-Ambient Pressure Switch

A long life pressure switch which is mounted to outdoor unit service valve. It is designed to cycle the outdoor fan motor in order to maintain head pressure within normal operating limits. The control will maintain working head pressure at low-ambient temperatures down to 0°F (-17.8°C) when properly installed.

Usage Guideline:

A Low-Ambient Pressure Switch must be used when cooling operation is used at outdoor temperatures below 55°F (12.8°C).

6. Support Feet

Four or five stick-on plastic feet that raise the unit 4 in. (101.6 mm) above the mounting pad. This allows sand, dirt, and other debris to be flushed from the unit base, minimizing corrosion.

Usage Guideline:

Suggested in the following applications:

Coastal installations.

Windy areas or where debris is normally circulating.

Rooftop installations.

For improved sound ratings.

7. Time Delay Relay

An SPST delay relay which briefly continues operation of indoor blower motor to provide additional cooling after the compressor cycles off.

NOTE: Most indoor unit controls include this feature. For those that do not, use the guideline below.

Usage Guideline:

For improved efficiency ratings for certain combinations of indoor and outdoor units. Refer to AHRI Directory of Certified Product Performance (AHRI Directory).

When a Time-Delay Relay (TDR) is called for in the AHRI Directory, use a 30 second TDR for MicroChannel Indoor units and use a 90 second TDR for Round Tube Plate Fin Indoor units.

Manufacturer reserves the right to change, at any time, specifications and designs without notice and without obligations.

DIMENSIONS

UNIT	SERIES	ELECTRICAL CHARACTERISTICS				A		B		C		D		E		F		G		H		I		J		K		OPERATING WEIGHT		SHIPPING WEIGHT		SHIPPING LENGTH / WIDTH (Sq.)		SHIPPING HEIGHT	
		208-230-1-60	208/230-3-60	460-3-60	575-3-60	INCH	MM	INCH	MM	INCH	MM	INCH	MM	INCH	MM	INCH	MM	INCH	MM	INCH	MM	INCH	MM	INCH	MM	INCH	MM	Lbs	Kgs	Lbs	Kgs	INCH	MM	INCH	MM
H5H8T24**AAA	A	Y	N	N	N	35	889.0	37	939.9	3/4	19.1	6 9/16	166.1	28 7/16	722.8	9 1/8	231.3	1 1/8	28.2	3 13/16	97.4	16 1/4	412.8	17	431.8	16	406.4	258	117.0	286	129.7	38	965.0	40 13/16	1036.6
H5H8T36**AAA	A	Y	N	N	N	35	889.0	40 3/8	1026.3	7/8	22.2	6 9/16	166.1	28 7/16	722.8	9 1/8	231.3	1 1/8	28.2	3 13/16	97.4	17 1/2	444.5	17 1/2	444.5	17 1/4	438.2	277	125.6	305	138.3	38	965.0	44 3/16	1123.0
H5H8T48**AAA	A	Y	N	N	N	35	889.0	47 3/16	1199.0	7/8	22.2	6 9/16	166.1	28 7/16	722.8	9 1/8	231.3	1 1/8	28.2	3 13/16	97.4	17 1/2	444.5	16 3/4	425.5	18 3/4	476.3	325	147.4	354	160.6	38	965.0	51	1295.7
H5H8T60**AAA	A	Y	N	N	N	35	889.0	47 3/16	1199.0	7/8	22.2	6 9/16	166.1	28 7/16	722.8	9 1/8	231.3	1 1/8	28.2	3 13/16	97.4	17 1/2	444.5	16 3/4	425.5	19	482.6	330	149.7	359	162.8	38	965.0	51	1295.7

Y=YES
N=NO

NOTES:

1. CENTER OF GRAVITY .

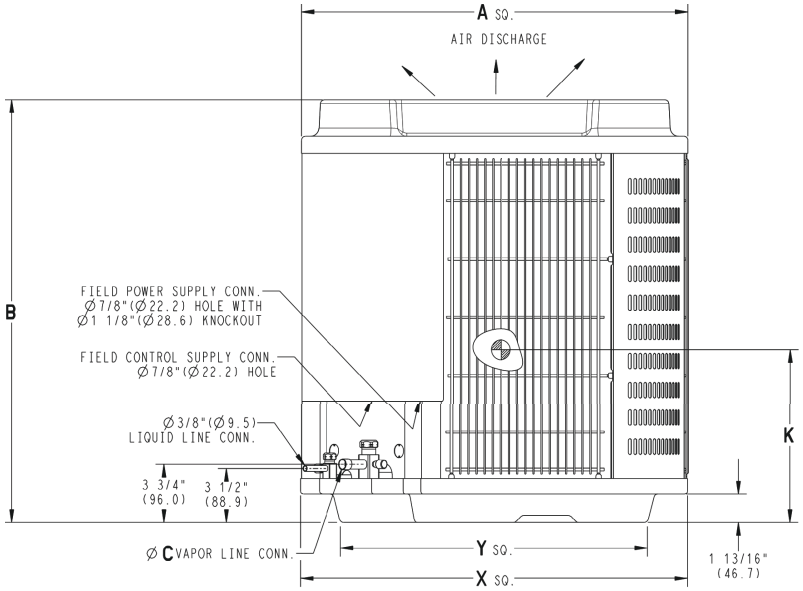

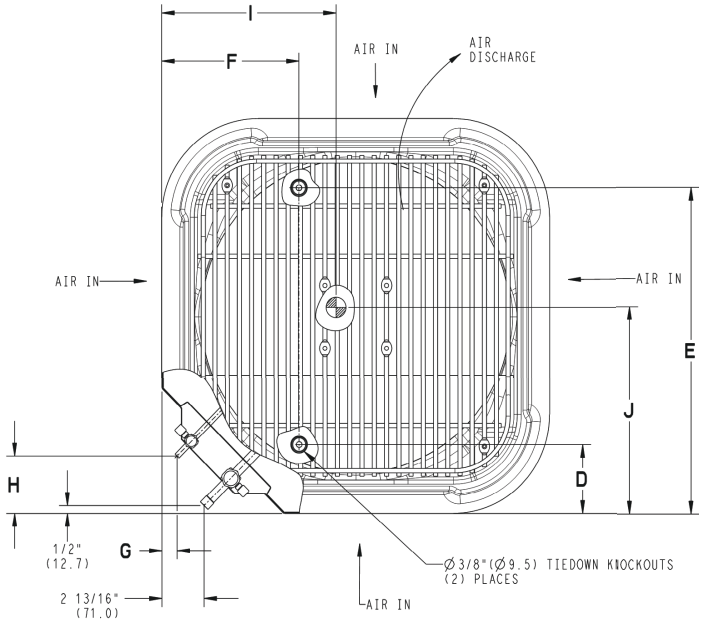

UNIT SIZE	"X" MINIMUM GROUND MOUNTING PAD APPLICATION DIMENSIONS		"Y" MINIMUM ROOF-TOP MOUNTING PAD APPLICATION DIMENSIONS	
-	23 1/8	587.3	17 7/8	454.6
-	25 3/4	654.0	20 7/16	518.5
-	31 3/16	792.5	22 15/16	583.2
24,36,48,60	35	889.0	26 3/4	679.7

NOTE: ALL DIMENSIONS IN INCH (MM)

U.S. ECCN: Not Subject to Regulation (N.S.R.)

SD6017-4 REV.-

CLEARANCES

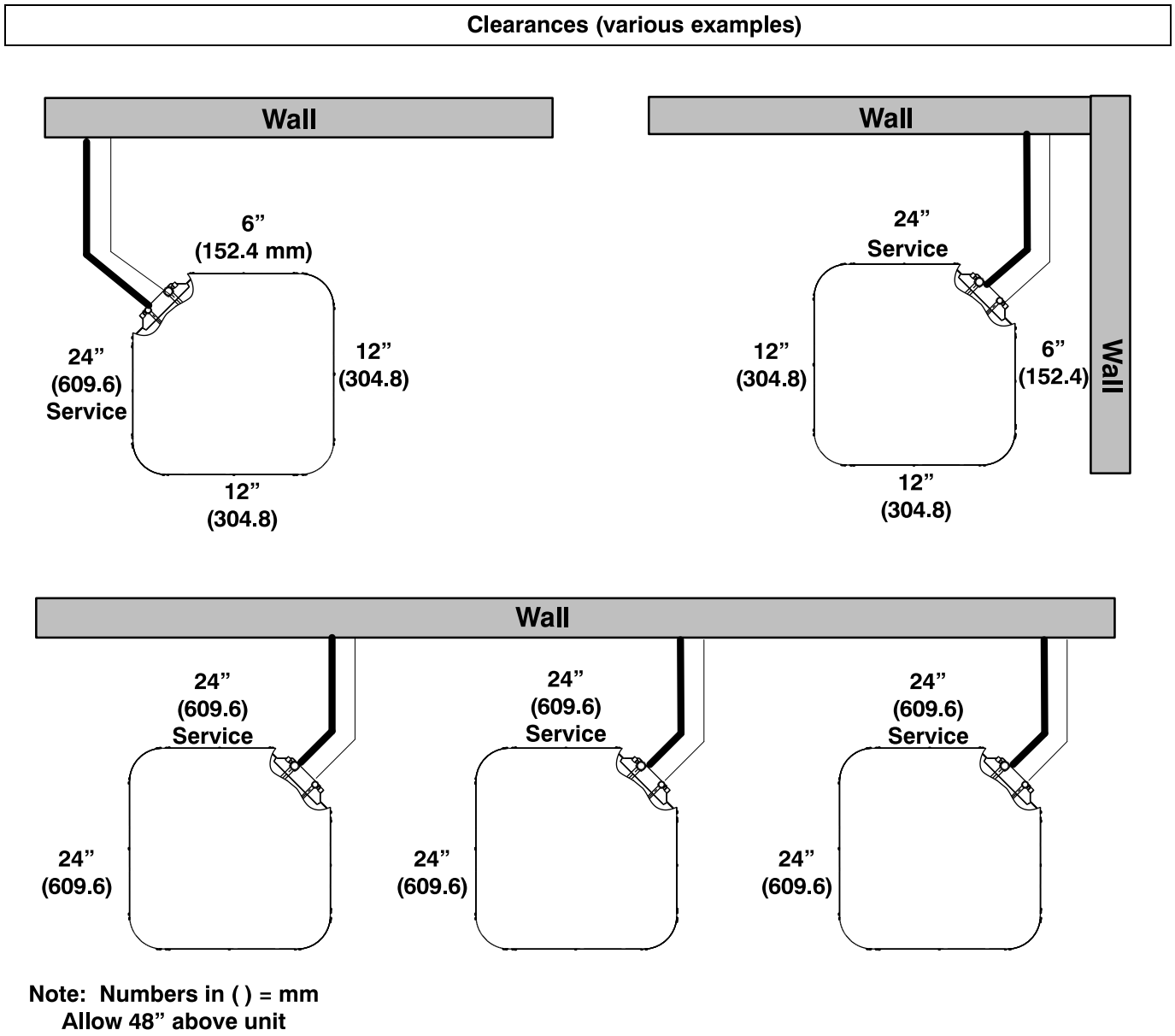

IMPORTANT: When installing multiple units in an alcove, roof well, or partially enclosed area, ensure there is adequate ventilation to prevent re-circulation of discharge air.

A07833

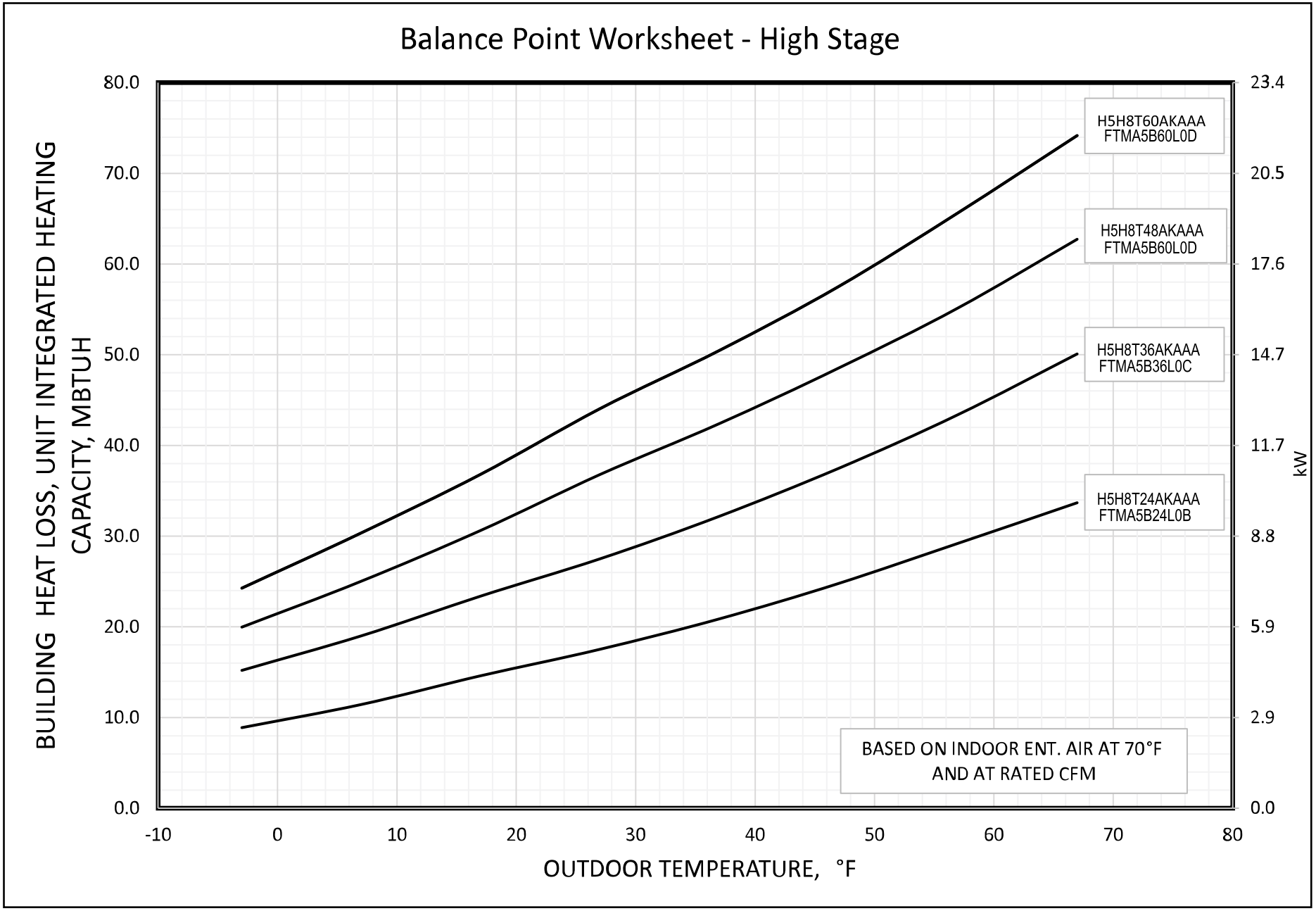
Balance Point Worksheet - High Stage
BUILDING HEAT LOSS, UNIT INTEGRATED HEATING CAPACITY, MBTUH
80.0
70.0
60.0
50.0
40.0
30.0
20.0
10.0
0.0
23.4
20.5
17.6
14.7
11.7
8.8
5.9
2.9
0.0
kW
-10
0
10
20
30
40
50
60
70
80
OUTDOOR TEMPERATURE, °F
H5H8T60AKAAA
FTMA5B60L0D
H5H8T48AKAAA
FTMA5B60L0D
H5H8T36AKAAA
FTMA5B36L0C
H5H8T24AKAAA
FTMA5B24L0B
BASED ON INDOOR ENT. AIR AT 70°F
AND AT RATED CFM

Balance Point Worksheet - Low Stage

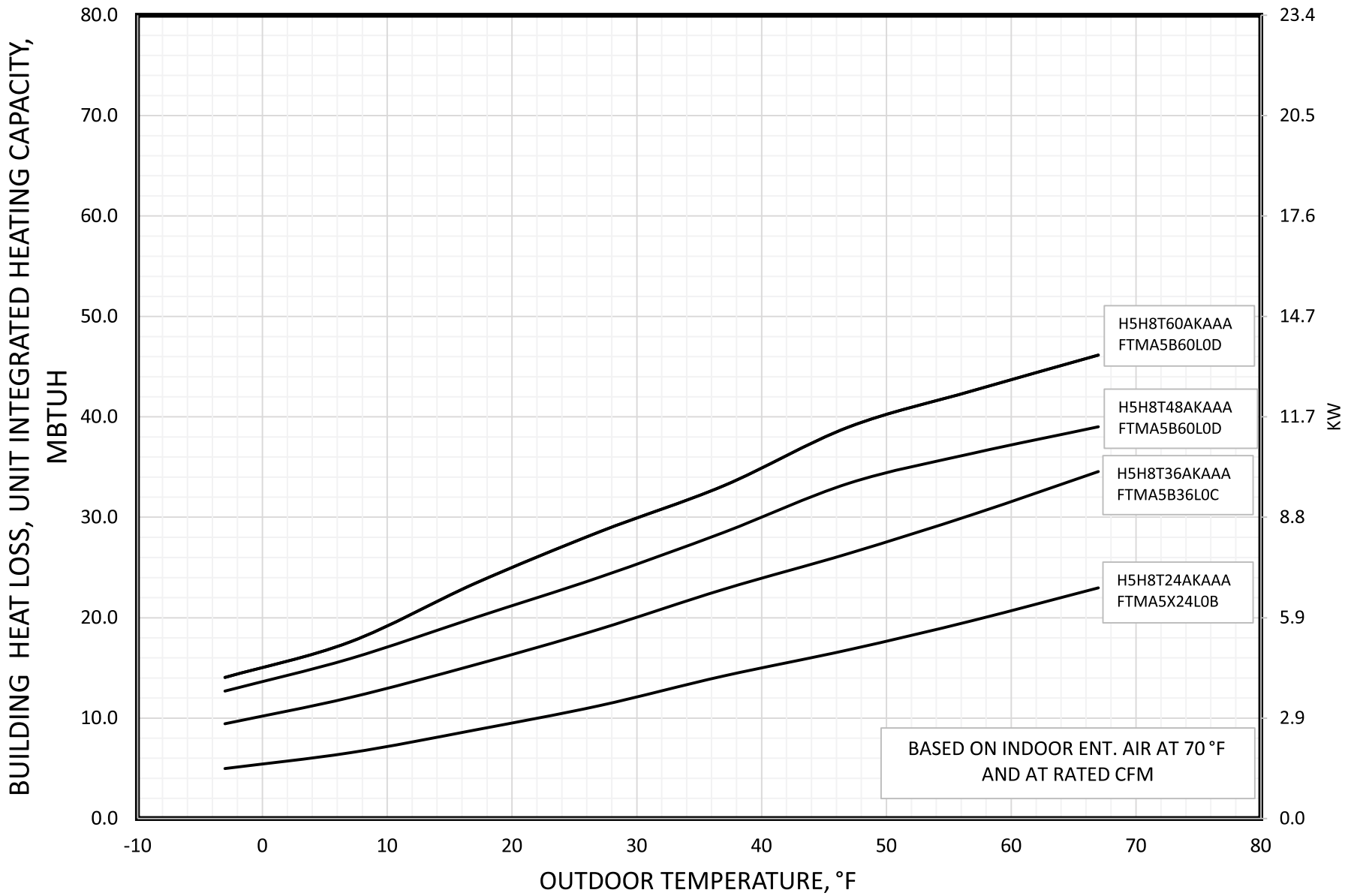

Detailed Cooling Capacities#

EVAPORATOR AIR		CONDENSER ENTERING AIR TEMPERATURES °F (°C)																	
		75.0 (23.9)			85.0 (29.4)			95.0 (35.0)			105.0 (40.6)			115.0 (46.1)			125.0 (51.7)		
CFM	EWB	Capacity MBtuh		Total Sys.	Capacity MBtuh		Total Sys.	Capacity MBtuh		Total Sys.	Capacity MBtuh		Total Sys.	Capacity MBtuh		Total Sys.	Capacity MBtuh		Total Sys.
		Total	Sens‡	KW**	Total	Sens‡	KW**	Total	Sens‡	KW**	Total	Sens‡	KW**	Total	Sens‡	KW**	Total	Sens‡	KW**
H5H8T24AKAAA Outdoor Section With FTMA5X24L0B Indoor Section - High																			
650	72.0 (22.2)	27.51	14.01	1.36	26.38	13.58	1.55	25.14	13.11	1.75	23.78	12.61	1.97	22.19	12.02	2.22	20.68	11.47	2.50
	67.0 (19.4)	24.86	17.13	1.37	23.84	16.70	1.56	22.71	16.21	1.75	21.47	15.72	1.97	20.14	15.17	2.22	18.69	14.58	2.49
	63.0 (17.2)††	23.00	16.47	1.38	22.03	16.02	1.56	20.97	15.55	1.75	19.83	15.04	1.97	18.59	14.50	2.21	17.27	13.92	2.49
	62.0 (16.7)	22.58	20.20	1.39	21.64	19.75	1.56	20.62	19.27	1.75	19.53	18.74	1.97	18.38	18.11	2.21	17.26	17.26	2.49
	57.0 (13.9)	21.67	21.67	1.39	20.93	20.93	1.56	20.13	20.13	1.75	19.25	19.25	1.97	18.29	18.29	2.21	17.23	17.23	2.49
700	72.0 (22.2)	27.85	14.41	1.37	26.69	13.97	1.56	25.41	13.49	1.76	24.02	12.98	1.99	22.50	12.44	2.24	20.84	11.84	2.52
	67.0 (19.4)	25.18	17.76	1.39	24.11	17.31	1.57	22.97	16.84	1.77	21.70	16.33	1.99	20.34	15.77	2.23	18.86	15.16	2.51
	63.0 (17.2)††	23.29	17.05	1.40	22.30	16.60	1.58	21.21	16.12	1.77	20.05	15.61	1.98	18.78	15.06	2.23	17.29	14.38	2.50
	62.0 (16.7)	22.91	21.06	1.40	21.95	20.60	1.58	20.91	20.09	1.77	19.83	19.48	1.98	18.74	18.74	2.23	17.64	17.64	2.50
	57.0 (13.9)	22.24	22.24	1.40	21.47	21.47	1.58	20.63	20.63	1.77	19.72	19.72	1.98	18.72	18.72	2.23	17.61	17.61	2.50
805	72.0 (22.2)	28.41	15.20	1.40	27.19	14.75	1.59	25.86	14.26	1.80	24.40	13.74	2.02	22.81	13.19	2.27	21.09	12.57	2.55
	67.0 (19.4)	25.71	19.04	1.42	24.60	18.59	1.60	23.40	18.10	1.80	22.08	17.58	2.02	20.65	17.01	2.27	19.13	16.36	2.54
	63.0 (17.2)††	23.79	18.24	1.43	22.75	17.78	1.61	21.62	17.29	1.80	20.40	16.76	2.02	19.10	16.20	2.26	17.69	15.59	2.54
	62.0 (16.7)	23.53	22.76	1.43	22.57	22.23	1.61	21.77	21.02	1.80	20.59	20.59	2.02	19.51	19.51	2.26	18.32	18.32	2.54
	57.0 (13.9)	23.29	23.29	1.43	22.46	22.46	1.61	21.55	21.55	1.80	20.57	20.57	2.02	19.49	19.49	2.26	18.30	18.30	2.54
H5H8T24AKAAA Outdoor Section With FTMA5X24L0B Indoor Section - Low																			
480	72.0 (22.2)	20.10	10.36	0.84	19.29	10.08	0.97	18.41	9.77	1.10	17.44	9.43	1.24	16.25	9.02	1.38	15.10	8.65	1.54
	67.0 (19.4)	18.08	12.67	0.87	17.36	12.41	0.99	16.54	12.11	1.12	15.67	11.80	1.26	19.11	15.54	0.90	13.56	11.03	1.57
	63.0 (17.2)††	16.65	12.13	0.89	15.99	11.87	1.01	15.25	11.59	1.14	14.42	11.26	1.28	13.48	10.88	1.43	12.43	10.47	1.59
	62.0 (16.7)	16.32	14.91	0.89	15.69	14.67	1.01	14.98	14.39	1.14	14.21	14.09	1.28	13.46	13.46	1.43	12.64	12.64	1.58
	57.0 (13.9)	15.75	15.75	0.90	15.28	15.28	1.02	14.75	14.75	1.15	14.14	14.14	1.28	13.43	13.43	1.43	12.62	12.62	1.58
560	72.0 (22.2)	20.62	11.03	0.85	19.75	10.73	0.98	18.81	10.42	1.11	17.78	10.08	1.25	16.63	9.70	1.40	15.16	9.20	1.55
	67.0 (19.4)	18.58	13.71	0.88	17.80	13.45	1.00	16.96	13.17	1.13	16.03	12.82	1.27	14.98	12.47	1.42	13.66	12.00	1.57
	63.0 (17.2)††	17.12	13.11	0.90	16.41	12.85	1.02	15.63	12.55	1.15	14.76	12.23	1.29	13.77	11.83	1.44	12.60	11.39	1.59
	62.0 (16.7)	16.86	16.32	0.90	16.30	15.83	1.02	15.58	15.58	1.15	14.87	14.87	1.28	14.14	14.14	1.43	13.25	13.25	1.59
	57.0 (13.9)	16.65	16.65	0.90	16.14	16.14	1.02	15.55	15.55	1.15	14.88	14.88	1.29	14.12	14.12	1.43	13.24	13.24	1.59
645	72.0 (22.2)	21.02	11.72	0.86	20.11	11.42	0.99	19.14	11.04	1.12	18.04	10.74	1.26	16.85	10.36	1.41	15.35	9.87	1.57
	67.0 (19.4)	18.96	14.79	0.89	18.16	14.52	1.01	17.27	14.22	1.14	16.30	13.90	1.28	15.23	13.53	1.43	14.04	13.10	1.59
	63.0 (17.2)††	17.49	14.11	0.91	16.75	13.84	1.03	15.93	13.54	1.16	15.03	13.22	1.30	13.94	12.79	1.45	12.91	12.37	1.61
	62.0 (16.7)	17.48	17.48	0.91	16.91	16.91	1.03	16.27	16.27	1.16	15.55	15.55	1.29	14.72	14.72	1.44	13.77	13.77	1.59
	57.0 (13.9)	17.45	17.45	0.91	16.89	16.89	1.03	16.25	16.25	1.16	15.52	15.52	1.29	14.70	14.70	1.44	21.14	21.14	1.51

Manufacturer reserves the right to change, at any time, specifications and designs without notice and without obligations.

Detailed Cooling Capacities# (Continued)

EVAPORATOR AIR		CONDENSER ENTERING AIR TEMPERATURES °F (°C)																	
		75.0 (23.9)			85.0 (29.4)			95.0 (35.0)			105.0 (40.6)			115.0 (46.1)			125.0 (51.7)		
CFM	EWB	Capacity MBtuh		Total Sys.	Capacity MBtuh		Total Sys.	Capacity MBtuh		Total Sys.	Capacity MBtuh		Total Sys.	Capacity MBtuh		Total Sys.	Capacity MBtuh		Total Sys.
		Total	Sens‡	KW**	Total	Sens‡	KW**	Total	Sens‡	KW**	Total	Sens‡	KW**	Total	Sens‡	KW**	Total	Sens‡	KW**
H5H8T36AKAAA Outdoor Section With FTMA5B36L0C Indoor Section - High																			
975	72.0 (22.2)	40.51	20.53	2.32	38.91	19.91	2.55	37.22	19.27	2.81	35.37	18.57	3.12	33.42	17.86	3.48	31.26	17.07	3.91
	67.0 (19.4)	36.67	25.10	2.31	35.18	24.47	2.54	33.62	23.82	2.81	31.96	23.13	3.11	30.14	22.41	3.48	28.17	21.60	3.91
	63.0 (17.2)††	33.91	24.13	2.30	32.52	23.49	2.53	31.07	22.84	2.80	29.51	22.15	3.11	27.82	21.40	3.47	25.98	20.60	3.90
	62.0 (16.7)	33.41	29.62	2.30	32.07	28.97	2.53	30.67	28.29	2.80	29.18	27.55	3.11	27.60	26.74	3.47	26.31	24.81	3.88
	57.0 (13.9)	32.11	32.11	2.29	31.04	31.04	2.53	29.92	29.92	2.80	28.70	28.70	3.11	27.37	27.37	3.47	25.90	25.90	3.90
1050	72.0 (22.2)	40.99	21.07	2.35	39.34	20.45	2.58	37.60	19.80	2.84	35.74	19.11	3.15	33.72	18.37	3.51	31.52	17.58	3.94
	67.0 (19.4)	37.10	25.97	2.34	35.60	25.35	2.57	34.00	24.69	2.83	32.29	23.99	3.14	30.44	23.24	3.50	28.43	22.43	3.93
	63.0 (17.2)††	34.32	24.94	2.33	32.90	24.30	2.56	31.41	23.64	2.82	29.81	22.93	3.13	28.08	22.20	3.50	26.22	21.37	3.93
	62.0 (16.7)	33.87	30.80	2.32	32.51	30.13	2.56	31.09	29.42	2.82	29.60	28.64	3.13	27.98	27.98	3.50	26.49	26.49	3.93
	57.0 (13.9)	32.89	32.89	2.32	31.78	31.78	2.56	30.61	30.61	2.82	29.35	29.35	3.13	27.97	27.97	3.50	26.45	26.45	3.93
1205	72.0 (22.2)	41.76	22.13	2.40	40.04	21.50	2.63	38.23	20.84	2.89	36.29	20.14	3.20	34.20	19.39	3.56	31.92	18.59	3.99
	67.0 (19.4)	37.81	27.71	2.39	36.26	27.08	2.62	34.60	26.40	2.88	32.83	25.68	3.19	30.92	24.91	3.55	28.85	24.08	3.98
	63.0 (17.2)††	35.00	26.55	2.38	33.52	25.90	2.61	31.97	25.22	2.88	30.32	24.50	3.19	28.54	23.72	3.55	26.61	22.88	3.98
	62.0 (16.7)	34.73	33.07	2.38	33.35	32.32	2.61	32.30	30.52	2.88	30.54	30.54	3.19	29.07	29.07	3.55	27.44	27.44	3.97
	57.0 (13.9)	34.28	34.28	2.38	33.10	33.10	2.61	31.85	31.85	2.88	30.50	30.50	3.19	29.03	29.03	3.55	27.41	27.41	3.98
H5H8T36AKAAA Outdoor Section With FTMA5B36L0C Indoor Section - Low																			
720	72.0 (22.2)	30.14	15.19	1.47	28.65	14.64	1.64	27.10	14.07	1.81	25.54	13.49	1.97	23.85	12.86	2.13	22.12	12.27	2.30
	67.0 (19.4)	27.15	18.56	1.50	25.83	17.98	1.66	24.45	17.43	1.83	23.01	16.83	1.99	21.48	16.20	2.16	19.85	15.54	2.33
	63.0 (17.2)††	25.02	17.77	1.53	23.81	17.23	1.69	22.53	16.67	1.84	21.18	16.07	2.01	19.73	15.43	2.17	26.93	20.66	1.33
	62.0 (16.7)	24.61	21.85	1.53	23.45	21.28	1.69	22.24	20.68	1.85	20.96	20.02	2.01	19.67	19.67	2.17	18.43	18.43	2.34
	57.0 (13.9)	23.78	23.78	1.54	22.85	22.85	1.70	21.86	21.86	1.85	20.79	20.79	2.01	19.64	19.64	2.17	18.39	18.39	2.34
840	72.0 (22.2)	30.89	16.13	1.49	29.31	15.55	1.66	27.71	14.97	1.83	26.05	14.40	1.99	24.29	13.72	2.15	22.50	13.13	2.32
	67.0 (19.4)	27.87	20.04	1.52	26.47	19.46	1.68	25.03	18.87	1.84	23.52	18.26	2.01	21.93	17.62	2.17	20.25	16.94	2.34
	63.0 (17.2)††	25.69	19.16	1.54	24.41	18.60	1.70	23.09	18.00	1.86	21.66	17.42	2.02	20.17	16.74	2.19	18.58	16.05	2.36
	62.0 (16.7)	25.44	23.83	1.54	24.24	23.19	1.70	23.08	23.06	1.86	21.89	21.89	2.02	20.66	20.66	2.18	19.33	19.33	2.35
	57.0 (13.9)	25.11	25.11	1.55	24.09	24.09	1.71	23.01	23.01	1.86	21.86	21.86	2.02	20.63	20.63	2.18	19.31	19.31	2.34
965	72.0 (22.2)	31.46	17.05	1.51	29.81	16.46	1.68	28.15	15.86	1.85	26.39	15.23	2.01	24.65	14.64	2.17	22.77	13.99	2.34
	67.0 (19.4)	28.42	21.52	1.54	26.96	20.92	1.70	25.47	20.31	1.86	23.91	19.68	2.03	22.29	19.01	2.19	20.58	18.30	2.36
	63.0 (17.2)††	26.22	20.53	1.56	24.89	19.95	1.72	23.50	19.35	1.88	22.05	18.70	2.04	20.53	18.03	2.21	18.91	17.29	2.38
	62.0 (16.7)	26.47	25.01	1.56	25.16	25.16	1.72	24.00	24.00	1.88	22.77	22.77	2.04	21.46	21.46	2.20	20.06	20.06	2.36
	57.0 (13.9)	26.23	26.23	1.56	25.12	25.12	1.72	23.96	23.96	1.88	22.74	22.74	2.04	21.43	21.43	2.20	20.03	20.02	2.36

Manufacturer reserves the right to change, at any time, specifications and designs without notice and without obligations.

Detailed Cooling Capacities# (Continued)

EVAPORATOR AIR		CONDENSER ENTERING AIR TEMPERATURES °F (°C)																	
		75.0 (23.9)			85.0 (29.4)			95.0 (35.0)			105.0 (40.6)			115.0 (46.1)			125.0 (51.7)		
CFM	EWB	Capacity MBtuh		Total Sys.	Capacity MBtuh		Total Sys.	Capacity MBtuh		Total Sys.	Capacity MBtuh		Total Sys.	Capacity MBtuh		Total Sys.	Capacity MBtuh		Total Sys.
		Total	Sens‡	KW**	Total	Sens‡	KW**	Total	Sens‡	KW**	Total	Sens‡	KW**	Total	Sens‡	KW**	Total	Sens‡	KW**
H5H8T48AKAAA Outdoor Section With FTMA5B60L0D Indoor Section - High																			
1300	72.0 (22.2)	57.73	29.25	2.96	55.53	28.41	3.24	53.12	27.50	3.60	50.51	26.52	4.02	47.69	25.48	4.49	44.64	24.36	5.03
	67.0 (19.4)	52.13	35.59	2.91	50.12	34.74	3.20	47.90	33.80	3.56	45.50	32.80	3.99	42.91	31.75	4.47	40.13	30.62	5.01
	63.0 (17.2)††	48.19	34.21	2.88	46.25	33.33	3.18	44.16	32.39	3.54	41.92	31.39	3.97	39.51	30.33	4.46	36.94	29.21	4.99
	62.0 (16.7)	47.28	41.82	2.88	45.39	40.93	3.17	43.37	39.97	3.54	41.21	38.94	3.97	38.93	37.82	4.45	36.62	36.62	4.99
	57.0 (13.9)	45.18	45.18	2.86	43.72	43.72	3.16	42.13	42.13	3.53	40.42	40.42	3.96	38.56	38.56	4.45	36.56	36.56	4.99
1400	72.0 (22.2)	58.49	30.10	3.00	56.23	29.24	3.28	53.74	28.35	3.63	51.08	27.33	4.04	48.19	26.28	4.52	45.07	25.16	5.06
	67.0 (19.4)	52.84	36.91	2.95	50.75	36.03	3.23	48.50	35.10	3.59	46.04	34.09	4.02	43.39	33.02	4.50	40.55	31.88	5.03
	63.0 (17.2)††	48.85	35.43	2.91	46.87	34.54	3.21	44.73	33.59	3.57	42.43	32.58	4.00	39.96	31.50	4.48	37.33	30.37	5.02
	62.0 (16.7)	48.00	43.61	2.91	46.08	42.70	3.20	44.02	41.71	3.57	41.84	40.62	3.99	39.60	39.60	4.48	37.50	37.50	5.02
	57.0 (13.9)	46.42	46.42	2.90	44.90	44.90	3.20	43.25	43.25	3.56	41.46	41.46	3.99	39.53	39.53	4.48	37.44	37.44	5.02
1600	72.0 (22.2)	59.71	31.70	3.06	57.35	30.83	3.34	54.78	29.89	3.69	51.99	28.88	4.10	48.97	27.83	4.58	45.74	26.66	5.11
	67.0 (19.4)	54.00	39.47	3.01	51.82	38.57	3.29	49.47	37.62	3.65	46.91	36.59	4.07	44.17	35.50	4.55	41.24	34.31	5.09
	63.0 (17.2)††	49.93	37.81	2.97	47.87	36.90	3.26	45.64	35.93	3.63	43.25	34.89	4.05	40.69	33.80	4.53	37.97	32.63	5.07
	62.0 (16.7)	49.28	47.03	2.97	47.33	46.03	3.26	45.58	44.19	3.63	43.36	43.36	4.05	41.28	41.28	4.54	39.04	39.04	5.08
	57.0 (13.9)	48.59	48.59	2.96	46.97	46.97	3.26	45.20	45.20	3.62	43.28	43.28	4.05	41.22	41.22	4.54	38.98	38.98	5.08
H5H8T48AKAAA Outdoor Section With FTMA5B60L0D Indoor Section - Low																			
960	72.0 (22.2)	41.87	21.35	1.76	39.64	20.49	2.03	37.34	19.63	2.34	34.94	18.76	2.68	32.49	17.83	3.07	30.00	16.92	3.49
	67.0 (19.4)	37.63	25.97	1.80	35.55	25.08	2.07	33.33	24.13	2.37	30.98	23.21	2.72	28.54	22.11	3.10	25.99	21.04	3.54
	63.0 (17.2)††	34.51	24.82	1.83	32.56	23.93	2.10	30.43	22.95	2.40	28.12	21.92	2.74	25.66	20.83	3.13	23.10	19.69	3.56
	62.0 (16.7)	33.78	30.45	1.84	31.90	29.51	2.11	29.83	28.48	2.41	27.65	27.52	2.75	25.68	25.68	3.13	23.72	23.72	3.56
	57.0 (13.9)	32.49	32.49	1.85	31.00	31.00	2.12	29.33	29.33	2.41	27.53	27.53	2.75	25.63	25.62	3.13	23.59	23.58	3.57
1120	72.0 (22.2)	43.00	22.73	1.77	40.67	21.83	2.05	38.28	20.97	2.35	35.83	20.08	2.70	33.31	19.17	3.08	30.70	18.23	3.52
	67.0 (19.4)	38.73	28.15	1.82	36.55	27.22	2.09	34.25	26.25	2.39	31.84	25.24	2.73	29.33	24.19	3.12	26.72	23.11	3.56
	63.0 (17.2)††	35.57	26.87	1.85	33.53	25.93	2.12	31.30	24.94	2.42	28.93	23.87	2.76	26.43	22.76	3.15	23.83	21.60	3.58
	62.0 (16.7)	34.99	33.38	1.85	33.06	32.76	2.12	31.15	31.15	2.42	29.25	29.25	2.76	27.28	27.28	3.14	25.25	25.25	3.57
	57.0 (13.9)	34.50	34.50	1.86	32.87	32.87	2.12	31.09	31.09	2.42	29.20	29.20	2.76	27.24	27.24	3.14	25.13	25.13	3.57
1280	72.0 (22.2)	43.82	24.02	1.79	41.41	23.15	2.06	38.97	22.26	2.37	36.47	21.36	2.72	33.90	20.36	3.10	31.24	19.49	3.54
	67.0 (19.4)	39.56	30.24	1.83	37.30	29.29	2.10	34.95	28.29	2.41	32.50	27.26	2.75	29.96	26.19	3.14	27.36	25.08	3.57
	63.0 (17.2)††	36.37	28.82	1.87	34.25	27.86	2.14	31.97	26.84	2.44	29.56	25.75	2.78	27.03	24.61	3.17	24.43	23.39	3.60
	62.0 (16.7)	36.41	35.31	1.86	34.49	34.49	2.13	32.63	32.63	2.43	30.65	30.65	2.77	28.60	28.60	3.15	26.49	26.49	3.58
	57.0 (13.9)	36.18	36.18	1.87	34.43	34.43	2.13	32.56	32.56	2.43	30.58	30.58	2.77	28.53	28.53	3.15	26.45	26.45	3.58

Manufacturer reserves the right to change, at any time, specifications and designs without notice and without obligations.

Detailed Cooling Capacities# (Continued)

EVAPORATOR AIR		CONDENSER ENTERING AIR TEMPERATURES °F (°C)																	
		75.0 (23.9)			85.0 (29.4)			95.0 (35.0)			105.0 (40.6)			115.0 (46.1)			125.0 (51.7)		
CFM	EWB	Capacity MBtuh		Total Sys.	Capacity MBtuh		Total Sys.	Capacity MBtuh		Total Sys.	Capacity MBtuh		Total Sys.	Capacity MBtuh		Total Sys.	Capacity MBtuh		Total Sys.
		Total	Sens‡	KW**	Total	Sens‡	KW**	Total	Sens‡	KW**	Total	Sens‡	KW**	Total	Sens‡	KW**	Total	Sens‡	KW**
H5H8T60AKAAA Outdoor Section With FTMA5B60L0D Indoor Section - High																			
1625	72.0 (22.2)	68.81	35.58	3.76	65.86	34.44	4.15	62.69	33.23	4.60	59.24	31.93	5.12	55.35	30.45	5.72	51.28	29.00	6.41
	67.0 (19.4)	62.45	43.70	3.72	59.77	42.57	4.11	56.91	41.35	4.56	53.79	40.05	5.07	50.38	38.65	5.67	46.63	37.12	6.35
	63.0 (17.2)††	57.83	42.02	3.69	55.35	40.89	4.08	52.70	39.68	4.53	49.82	38.39	5.04	46.68	37.00	5.63	43.23	35.49	6.31
	62.0 (16.7)	56.86	51.66	3.69	54.47	50.48	4.08	51.91	49.26	4.52	49.17	47.89	5.04	46.70	45.25	5.63	43.36	43.36	6.30
	57.0 (13.9)	54.78	54.78	3.68	52.89	52.89	4.07	50.84	50.84	4.52	48.60	48.60	5.03	46.11	46.11	5.63	43.33	43.33	6.31
1750	72.0 (22.2)	69.58	36.55	3.80	66.55	35.40	4.19	63.29	34.18	4.64	59.77	32.86	5.16	55.89	31.44	5.76	51.64	29.90	6.46
	67.0 (19.4)	63.19	45.28	3.76	60.44	44.13	4.15	57.50	42.90	4.60	54.31	41.59	5.12	50.77	40.21	5.71	46.99	38.61	6.40
	63.0 (17.2)††	58.53	43.49	3.74	55.98	42.35	4.13	53.27	41.12	4.57	50.32	39.81	5.09	47.11	38.41	5.68	43.59	36.87	6.36
	62.0 (16.7)	57.67	53.81	3.73	55.23	52.62	4.12	52.64	51.32	4.57	50.21	49.11	5.09	47.19	47.19	5.68	44.29	44.29	6.37
	57.0 (13.9)	56.18	56.18	3.72	54.21	54.21	4.12	52.07	52.07	4.56	49.72	49.72	5.08	47.13	47.13	5.68	44.22	44.22	6.37
2000	72.0 (22.2)	70.80	38.40	3.89	67.64	37.23	4.28	64.24	35.98	4.73	60.57	34.64	5.25	56.55	33.20	5.85	52.06	31.60	6.54
	67.0 (19.4)	64.37	48.33	3.85	61.50	47.15	4.24	58.44	45.90	4.69	55.12	44.54	5.20	51.49	43.07	5.80	47.56	41.48	6.49
	63.0 (17.2)††	59.65	46.32	3.82	57.01	45.15	4.21	54.18	43.90	4.66	51.12	42.55	5.17	47.80	41.10	5.76	44.17	39.51	6.45
	62.0 (16.7)	59.10	57.82	3.82	56.65	56.65	4.21	54.22	54.22	4.66	51.69	51.69	5.18	48.89	48.89	5.78	45.77	45.77	6.47
	57.0 (13.9)	58.56	58.56	3.82	56.43	56.43	4.21	54.14	54.14	4.66	51.62	51.62	5.18	48.83	48.83	5.77	45.71	45.71	6.47
H5H8T60AKAAA Outdoor Section With FTMA5B60L0D Indoor Section - Low																			
1200	72.0 (22.2)	50.30	25.87	2.15	48.23	25.17	2.45	45.83	24.62	2.78	43.27	23.43	3.13	40.23	22.39	3.52	36.69	21.20	3.92
	67.0 (19.4)	45.26	31.84	2.19	43.34	31.10	2.49	41.20	30.29	2.82	38.34	29.03	3.16	35.97	28.37	3.55	32.81	27.16	3.96
	63.0 (17.2)††	41.66	30.46	2.23	39.84	29.72	2.53	37.82	28.89	2.85	35.53	27.96	3.20	32.92	26.90	3.58	29.92	25.68	3.99
	62.0 (16.7)	40.93	37.66	2.23	39.18	36.91	2.53	37.29	36.02	2.85	35.36	35.36	3.20	33.31	33.31	3.57	30.95	30.95	3.98
	57.0 (13.9)	39.95	39.95	2.24	38.58	38.58	2.54	37.04	37.04	2.85	35.29	35.28	3.20	33.25	33.25	3.57	30.90	30.90	3.98
1400	72.0 (22.2)	51.49	27.60	2.18	49.33	26.84	2.48	46.89	26.01	2.81	44.16	25.09	3.16	40.95	24.02	3.55	37.35	22.83	3.96
	67.0 (19.4)	46.40	34.51	2.22	44.40	33.78	2.52	42.15	32.95	2.85	39.61	32.02	3.20	36.73	30.94	3.58	33.47	29.72	3.99
	63.0 (17.2)††	42.75	32.95	2.25	40.85	32.19	2.55	38.74	31.35	2.88	36.35	30.40	3.23	33.64	29.32	3.60	30.59	28.06	4.02
	62.0 (16.7)	42.33	42.06	2.26	40.75	40.75	2.55	39.09	39.09	2.87	37.16	37.16	3.22	34.98	34.98	3.59	32.44	32.44	4.00
	57.0 (13.9)	42.16	42.16	2.26	40.68	40.68	2.55	39.03	39.03	2.87	37.13	37.13	3.22	34.93	34.93	3.59	32.39	32.39	4.00
1600	72.0 (22.2)	52.41	29.18	2.21	50.15	28.44	2.52	47.63	27.60	2.84	44.78	26.67	3.20	41.46	25.60	3.58	37.74	24.49	3.99
	67.0 (19.4)	47.28	37.09	2.25	45.20	36.34	2.55	42.90	35.52	2.88	40.22	34.51	3.23	37.33	33.44	3.61	34.02	32.12	4.02
	63.0 (17.2)††	43.58	35.33	2.28	41.62	34.56	2.58	39.45	33.71	2.91	37.00	32.73	3.26	34.24	31.59	3.63	31.14	30.14	4.04
	62.0 (16.7)	44.07	44.07	2.28	42.49	42.49	2.57	40.73	40.73	2.89	38.69	38.69	3.24	36.35	36.35	3.61	33.62	33.62	4.02
	57.0 (13.9)	44.00	44.00	2.28	42.43	42.43	2.57	40.67	40.67	2.89	38.64	38.64	3.24	36.30	36.30	3.61	33.60	33.60	4.02

† Total and sensible capacities are net capacities. Blower motor heat has been subtracted.
‡ Sensible capacities shown are based on 80°F (27°C) entering air at the indoor coil. For sensible capacities at other than 80°F (27°C), deduct 835 Btuh (245 kW) per 1000 CFM (480 L/S) of indoor coil air for each degree below 80°F (27°C), or add 835 Btuh (245 kW) per 1000 CFM (480 L/S) of indoor coil air per degree above 80°F (27°C).
**System kw is total of indoor and outdoor unit kilowatts.
††At TVA rating indoor condition (75°F edb/63°F ewb). All other indoor air temperatures are at 80°F edb.
Detailed cooling capacities are based on indoor and outdoor unit at the same elevation per AHRI standard 210/240-2020. If additional tubing length and/or indoor unit is located above outdoor unit, a slight variation in capacity may occur.
EWB — Entering Wet Bulb
NOTE: When the required data falls between the published data, interpolation may be performed. Extrapolation is not an acceptable practice.

Manufacturer reserves the right to change, at any time, specifications and designs without notice and without obligations.

HEAT PUMP HEATING PERFORMANCE

INDOOR AIR		OUTDOOR COIL ENTERING AIR TEMPERATURES °F (°C)																							
		-3.0 (-19.4)			7.0 (-13.9)			17.0 (-8.3)			27.0 (-2.8)			37.0 (2.8)			47.0 (8.3)			57.0 (13.9)			67.0 (19.4)		
EDB	CFM	Capacity MBtuh		Total Sys. KW†	Capacity MBtuh		Total Sys. KW†	Capacity MBtuh		Total Sys. KW†	Capacity MBtuh		Total Sys. KW†	Capacity MBtuh		Total Sys. KW†	Capacity MBtuh		Total Sys. KW†	Capacity MBtuh		Total Sys. KW†	Capacity MBtuh		Total Sys. KW†
		Total	Integ*		Total	Integ*		Total	Integ*		Total	Integ*		Total	Integ*		Total	Integ*		Total	Integ*		Total	Integ*	
H5H8T24AKAAA Outdoor Section With FTMA5X24L0B Indoor Section - High																									
65.0 (18.3)	650	8.94	8.22	1.30	11.48	10.55	1.37	14.50	13.22	1.45	17.42	15.47	1.52	20.75	18.88	1.61	24.63	24.63	1.72	29.00	29.00	1.86	33.71	33.71	2.01
	700	9.02	8.30	1.31	11.58	10.65	1.37	14.64	13.35	1.45	17.54	15.58	1.52	20.91	19.03	1.60	24.82	24.82	1.70	29.25	29.25	1.83	33.91	33.91	1.96
	805	9.19	8.46	1.32	11.73	10.78	1.38	14.77	13.47	1.45	17.76	15.77	1.51	21.20	19.29	1.58	25.16	25.16	1.68	29.66	29.66	1.80	34.22	34.22	1.91
70.0 (21.1)	650	8.63	7.94	1.36	11.14	10.24	1.43	14.15	12.90	1.51	17.22	15.30	1.60	20.46	18.62	1.69	24.26	24.26	1.80	28.57	28.57	1.94	33.32	33.32	2.12
	700	8.71	8.02	1.36	11.24	10.33	1.43	14.41	13.14	1.52	17.33	15.39	1.59	20.61	18.76	1.67	24.46	24.46	1.78	28.82	28.82	1.92	33.53	33.53	2.06
	805	8.88	8.17	1.38	11.43	10.50	1.44	14.60	13.31	1.52	17.53	15.57	1.58	20.89	19.01	1.66	24.80	24.80	1.76	29.23	29.23	1.88	33.72	33.72	1.98
75.0 (23.9)	650	8.32	7.65	1.41	10.82	9.94	1.49	13.68	12.47	1.58	16.97	15.07	1.67	20.18	18.36	1.77	23.91	23.91	1.89	28.16	28.16	2.03	32.87	32.87	2.22
	700	8.40	7.73	1.42	10.91	10.03	1.49	13.80	12.58	1.58	17.08	15.17	1.66	20.32	18.49	1.75	24.10	24.10	1.87	28.40	28.40	2.01	33.15	33.15	2.18
	805	8.56	7.87	1.44	11.10	10.20	1.50	14.03	12.79	1.58	17.29	15.35	1.66	20.59	18.74	1.74	24.44	24.44	1.84	28.80	28.80	1.97	33.38	33.38	2.09
H5H8T24AKAAA Outdoor Section With FTMA5X24L0B Indoor Section - Low																									
65.0 (18.3)	480	5.15	4.73	0.97	6.62	6.08	1.03	8.80	8.03	1.06	11.18	9.93	1.10	14.04	12.77	1.15	16.56	16.56	1.18	19.38	19.38	1.23	22.50	22.50	1.28
	560	5.26	4.83	0.98	6.76	6.21	1.03	8.97	8.18	1.06	11.38	10.11	1.08	14.25	12.97	1.12	16.85	16.85	1.14	19.76	19.76	1.18	22.97	22.97	1.22
	645	5.39	4.95	0.99	6.88	6.32	1.04	9.12	8.31	1.06	11.55	10.26	1.08	14.41	13.11	1.10	17.08	17.08	1.12	20.07	20.07	1.14	23.37	23.37	1.17
70.0 (21.1)	480	4.87	4.48	1.02	6.29	5.78	1.08	8.47	7.73	1.12	10.80	9.59	1.15	13.32	12.12	1.19	16.28	16.28	1.25	19.05	19.05	1.30	22.13	22.13	1.36
	560	4.98	4.58	1.02	6.43	5.91	1.08	8.65	7.89	1.11	11.01	9.78	1.14	13.77	12.53	1.17	16.56	16.56	1.21	19.42	19.42	1.24	22.57	22.57	1.29
	645	5.08	4.68	1.04	6.55	6.02	1.09	8.80	8.02	1.11	11.23	9.98	1.13	14.20	12.92	1.17	16.80	16.80	1.18	19.73	19.73	1.21	22.97	22.97	1.24
75.0 (23.9)	480	4.52	4.17	1.06	5.89	5.42	1.13	8.10	7.39	1.17	10.43	9.27	1.21	12.94	11.77	1.25	16.00	16.00	1.32	18.71	18.71	1.37	21.69	21.69	1.43
	560	4.64	4.26	1.07	6.03	5.54	1.13	8.28	7.55	1.17	10.65	9.46	1.20	13.29	12.09	1.23	16.28	16.28	1.28	19.08	19.08	1.32	22.22	22.22	1.37
	645	4.79	4.40	1.09	6.22	5.71	1.14	8.48	7.73	1.17	10.89	9.67	1.19	13.53	12.31	1.22	16.51	16.51	1.25	19.39	19.39	1.28	22.62	22.62	1.32
H5H8T36AKAAA Outdoor Section With FTMA5B36L0C Indoor Section - High																									
65.0 (18.3)	975	15.26	14.03	2.08	19.03	17.48	2.21	23.28	21.23	2.35	27.38	24.32	2.49	32.04	29.16	2.65	37.30	37.30	2.85	43.16	43.16	3.08	49.81	49.81	3.40
	1050	15.39	14.16	2.09	19.18	17.63	2.21	23.41	21.34	2.35	27.55	24.47	2.48	32.25	29.35	2.64	37.55	37.55	2.82	43.47	43.47	3.06	50.24	50.24	3.36
	1205	15.65	14.39	2.12	19.50	17.92	2.23	23.68	21.59	2.36	27.86	24.75	2.48	32.63	29.69	2.63	38.00	38.00	2.80	44.01	44.01	3.02	50.91	50.91	3.33
70.0 (21.1)	975	14.82	13.64	2.17	18.58	17.07	2.30	23.01	20.98	2.46	27.05	24.03	2.61	31.64	28.79	2.77	36.81	36.81	2.97	42.57	42.57	3.22	49.03	49.03	3.54
	1050	14.96	13.76	2.18	18.73	17.21	2.31	23.14	21.10	2.46	27.22	24.17	2.60	31.84	28.97	2.76	37.06	37.06	2.95	42.88	42.88	3.19	49.45	49.45	3.50
	1205	15.21	13.99	2.21	19.02	17.48	2.33	23.40	21.34	2.47	27.52	24.44	2.59	32.21	29.31	2.74	37.50	37.50	2.92	43.41	43.41	3.15	50.11	50.11	3.46
75.0 (23.9)	975	14.37	13.22	2.26	18.14	16.67	2.40	22.74	20.73	2.58	26.73	23.74	2.73	31.24	28.43	2.90	36.32	36.32	3.11	41.99	41.99	3.37	48.28	48.28	3.70
	1050	14.51	13.35	2.27	18.29	16.81	2.41	22.88	20.86	2.58	26.89	23.88	2.72	31.43	28.60	2.88	36.57	36.57	3.08	42.29	42.29	3.33	48.91	48.91	3.67
	1205	14.77	13.59	2.30	18.57	17.07	2.42	23.13	21.09	2.58	27.18	24.14	2.71	31.79	28.93	2.87	37.00	37.00	3.05	42.82	42.82	3.29	49.32	49.32	3.61
H5H8T36AKAAA Outdoor Section With FTMA5B36L0C Indoor Section - Low																									
65.0 (18.3)	720	9.71	8.94	1.63	12.12	11.14	1.74	15.27	13.93	1.81	18.73	16.63	1.87	22.62	20.59	1.96	26.09	26.09	2.02	29.86	29.86	2.11	33.92	33.92	2.23
	840	9.91	9.12	1.64	12.36	11.36	1.74	15.55	14.18	1.80	19.07	16.93	1.85	22.91	20.85	1.91	26.47	26.47	1.95	30.35	30.35	2.03	34.56	34.56	2.13
	965	10.08	9.27	1.65	12.57	11.55	1.74	15.79	14.39	1.79	19.40	17.23	1.84	23.16	21.07	1.88	26.78	26.78	1.91	30.76	30.76	1.97	35.07	35.07	2.06
70.0 (21.1)	720	9.23	8.50	1.71	11.58	10.64	1.82	14.77	13.47	1.90	18.22	16.18	1.97	22.29	20.29	2.07	25.71	25.71	2.14	29.41	29.41	2.23	33.41	33.41	2.36
	840	9.44	8.69	1.71	11.83	10.87	1.82	15.06	13.73	1.89	18.57	16.49	1.94	22.59	20.56	2.02	26.09	26.09	2.07	29.90	29.90	2.14	34.03	34.03	2.25
	965	9.63	8.85	1.73	12.05	11.07	1.83	15.30	13.95	1.88	18.85	16.74	1.93	22.84	20.78	1.99	26.40	26.40	2.03	30.30	30.30	2.09	34.54	34.54	2.18
75.0 (23.9)	720	8.69	7.99	1.79	10.97	10.08	1.91	14.21	12.96	1.99	17.68	15.70	2.07	21.89	19.92	2.19	25.33	25.33	2.26	28.97	28.97	2.35	32.90	32.90	2.48
	840	8.90	8.19	1.79	11.23	10.32	1.91	14.51	13.23	1.98	18.03	16.01	2.04	22.24	20.24	2.14	25.70	25.70	2.19	29.45	29.45	2.26	33.51	33.51	2.37
	965	9.10	8.37	1.82	11.45	10.52	1.92	14.76	13.45	1.98	18.33	16.28	2.03	22.51	20.48	2.10	26.00	26.00	2.14	29.83	29.83	2.21	34.00	34.00	2.30

Manufacturer reserves the right to change, at any time, specifications and designs without notice and without obligations.

HEAT PUMP HEATING PERFORMANCE (Continued)

INDOOR AIR		OUTDOOR COIL ENTERING AIR TEMPERATURES °F (°C)																							
		-3.0 (-19.4)			7.0 (-13.9)			17.0 (-8.3)			27.0 (-2.8)			37.0 (2.8)			47.0 (8.3)			57.0 (13.9)			67.0 (19.4)		
		Capacity MBtuh		Total Sys. KW†	Capacity MBtuh		Total Sys. KW†	Capacity MBtuh		Total Sys. KW†	Capacity MBtuh		Total Sys. KW†	Capacity MBtuh		Total Sys. KW†	Capacity MBtuh		Total Sys. KW†	Capacity MBtuh		Total Sys. KW†	Capacity MBtuh		Total Sys. KW†
EDB	CFM	Total	Integ*		Total	Integ*		Total	Integ*		Total	Integ*		Total	Integ*		Total	Integ*		Total	Integ*		Total	Integ*	
H5H8T48AKAAA Outdoor Section With FTMA5B60L0D Indoor Section - High																									
65.0 (18.3)	1300	20.66	19.00	2.63	25.60	23.53	2.77	31.31	28.54	2.93	37.04	32.90	3.08	42.67	38.83	3.25	48.81	48.81	3.45	55.47	55.47	3.69	63.07	63.07	4.02
	1400	20.87	19.20	2.64	25.84	23.74	2.77	32.06	29.23	2.93	37.26	33.10	3.06	42.95	39.09	3.21	49.16	49.16	3.40	55.91	55.91	3.64	63.69	63.69	3.95
	1600	21.25	19.55	2.66	26.26	24.13	2.78	32.44	29.58	2.92	37.67	33.46	3.04	43.47	39.56	3.18	49.75	49.75	3.34	56.66	56.66	3.56	64.63	64.63	3.86
70.0 (21.1)	1300	19.76	18.18	2.75	24.79	22.78	2.90	30.34	27.66	3.06	36.54	32.46	3.25	42.11	38.32	3.41	48.16	48.16	3.62	54.69	54.69	3.87	62.09	62.09	4.20
	1400	19.96	18.37	2.76	25.01	22.99	2.90	30.60	27.90	3.05	36.76	32.65	3.22	42.38	38.57	3.38	48.50	48.50	3.57	55.11	55.11	3.81	62.69	62.69	4.13
	1600	20.33	18.71	2.78	25.43	23.37	2.91	31.09	28.35	3.04	37.16	33.01	3.19	42.85	39.00	3.33	49.08	49.08	3.51	55.86	55.86	3.73	63.64	63.64	4.03
75.0 (23.9)	1300	18.84	17.33	2.88	23.98	22.04	3.04	29.54	26.94	3.21	36.10	32.07	3.42	41.58	37.84	3.59	47.53	47.53	3.80	53.95	53.95	4.06	61.13	61.13	4.40
	1400	19.04	17.52	2.89	24.20	22.24	3.04	29.79	27.16	3.20	36.29	32.23	3.39	41.83	38.06	3.56	47.87	47.87	3.75	54.37	54.37	4.00	61.71	61.71	4.32
	1600	19.41	17.86	2.91	24.59	22.60	3.05	30.25	27.58	3.19	36.66	32.56	3.36	42.28	38.48	3.51	48.42	48.42	3.68	55.07	55.07	3.91	62.64	62.64	4.22
H5H8T48AKAAA Outdoor Section With FTMA5B60L0D Indoor Section - Low																									
65.0 (18.3)	960	12.24	11.25	2.00	15.17	13.94	2.11	19.96	18.20	2.16	24.30	21.58	2.21	28.79	26.20	2.27	33.44	33.44	2.38	36.35	36.35	2.45	38.87	38.87	2.55
	1120	12.15	11.18	2.01	15.05	13.83	2.11	20.13	18.35	2.15	24.66	21.91	2.18	29.38	26.74	2.23	34.06	34.06	2.30	37.08	37.08	2.35	39.64	39.64	2.41
	1280	12.13	11.16	2.01	15.00	13.78	2.11	20.25	18.46	2.14	24.93	22.14	2.16	29.85	27.17	2.20	34.53	34.53	2.25	37.64	37.64	2.28	40.24	40.24	2.32
70.0 (21.1)	960	12.63	11.62	2.13	15.85	14.57	2.25	19.74	17.99	2.29	23.61	20.97	2.33	27.88	25.37	2.39	32.75	32.75	2.51	35.67	35.67	2.59	38.26	38.26	2.70
	1120	12.70	11.69	2.13	15.92	14.63	2.24	20.00	18.24	2.27	24.04	21.35	2.30	28.52	25.96	2.35	33.40	33.40	2.44	36.40	36.40	2.49	39.02	39.02	2.56
	1280	12.76	11.74	2.14	15.97	14.67	2.25	20.18	18.40	2.27	24.36	21.63	2.28	29.01	26.40	2.32	33.88	33.88	2.38	36.97	36.97	2.41	39.61	39.61	2.47
75.0 (23.9)	960	12.32	11.33	2.25	15.69	14.42	2.38	18.94	17.27	2.41	22.70	20.16	2.45	26.85	24.43	2.51	31.88	31.88	2.65	34.98	34.98	2.74	37.66	37.66	2.85
	1120	12.50	11.50	2.25	15.89	14.60	2.37	19.29	17.59	2.39	23.22	20.62	2.42	27.64	25.15	2.47	32.64	32.64	2.57	35.69	35.69	2.63	38.39	38.39	2.71
	1280	12.66	11.65	2.27	16.05	14.75	2.38	19.58	17.85	2.39	23.61	20.97	2.41	28.17	25.64	2.44	33.17	33.17	2.52	36.27	36.27	2.56	38.98	38.98	2.61
H5H8T60AKAAA Outdoor Section With FTMA5B60L0D Indoor Section - High																									
65.0 (18.3)	1625	24.87	22.88	3.26	30.86	28.36	3.42	37.35	34.06	3.58	44.27	39.32	3.76	50.75	46.18	3.93	57.85	57.85	4.12	66.07	66.07	4.36	74.79	74.79	4.59
	1750	25.11	23.10	3.27	31.13	28.61	3.43	37.78	34.45	3.59	44.54	39.56	3.75	51.08	46.48	3.91	58.26	58.26	4.09	66.62	66.62	4.32	75.03	75.03	4.52
	2000	25.54	23.50	3.31	31.60	29.04	3.46	38.94	35.51	3.62	45.04	40.00	3.75	51.65	47.00	3.89	58.99	58.99	4.05	67.53	67.53	4.26	75.21	75.21	4.42
70.0 (21.1)	1625	24.03	22.10	3.41	30.07	27.64	3.58	36.50	33.28	3.74	43.75	38.85	3.94	50.13	45.62	4.11	57.27	57.27	4.32	65.09	65.09	4.56	73.84	73.84	4.81
	1750	24.26	22.32	3.43	30.34	27.88	3.59	36.80	33.55	3.74	44.04	39.11	3.93	50.45	45.91	4.09	57.50	57.50	4.28	65.63	65.63	4.51	74.16	74.16	4.72
	2000	24.69	22.72	3.47	30.81	28.31	3.62	37.34	34.04	3.76	44.49	39.51	3.93	51.01	46.42	4.07	58.19	58.19	4.24	66.53	66.53	4.45	74.44	74.44	4.62
75.0 (23.9)	1625	23.16	21.31	3.56	29.27	26.89	3.74	35.67	32.52	3.91	43.27	38.43	4.13	49.53	45.07	4.31	56.35	56.35	4.51	64.11	64.11	4.77	72.85	72.85	5.04
	1750	23.39	21.52	3.58	29.52	27.13	3.75	35.97	32.79	3.91	43.53	38.66	4.12	49.84	45.35	4.28	56.75	56.75	4.48	64.63	64.63	4.72	73.26	73.26	4.95
	2000	23.82	21.91	3.62	29.99	27.56	3.78	36.49	33.27	3.93	43.97	39.05	4.11	50.39	45.86	4.26	57.42	57.42	4.43	65.53	65.53	4.65	73.63	73.63	4.84
H5H8T60AKAAA Outdoor Section With FTMA5B60L0D Indoor Section - Low																									
65.0 (18.3)	1200	14.77	13.58	2.43	18.33	16.84	2.55	23.97	21.86	2.62	28.99	25.75	2.67	33.42	30.42	2.72	39.06	39.06	2.83	42.60	42.60	2.89	46.09	46.09	2.98
	1400	15.13	13.91	2.44	18.76	17.24	2.56	24.51	22.34	2.61	29.55	26.24	2.65	34.23	31.15	2.68	39.59	39.59	2.75	43.26	43.26	2.78	46.89	46.89	2.84
	1600	15.48	14.25	2.46	19.16	17.61	2.58	24.99	22.78	2.62	30.00	26.65	2.64	34.72	31.60	2.65	40.03	40.03	2.70	43.76	43.76	2.71	47.33	47.33	2.75
70.0 (21.1)	1200	13.68	12.58	2.53	17.12	15.74	2.66	22.88	20.86	2.75	27.95	24.82	2.81	32.55	29.62	2.87	38.39	38.39	3.00	41.98	41.98	3.06	45.33	45.33	3.16
	1400	14.05	12.92	2.56	17.58	16.15	2.68	23.40	21.34	2.74	28.55	25.36	2.79	33.16	30.18	2.82	39.00	39.00	2.92	42.63	42.63	2.95	46.15	46.15	3.02
	1600	14.38	13.23	2.58	17.95	16.49	2.70	23.75	21.66	2.75	29.02	25.77	2.78	33.84	30.80	2.80	39.45	39.45	2.87	43.15	43.15	2.88	46.81	46.81	2.93
75.0 (23.9)	1200	12.44	11.45	2.64	15.73	14.45	2.78	21.67	19.76	2.88	26.90	23.89	2.95	31.67	28.82	3.02	36.55	36.55	3.12	41.34	41.34	3.25	44.62	44.62	3.34
	1400	12.76	11.73	2.67	16.11	14.80	2.80	22.18	20.22	2.88	27.47	24.39	2.93	32.30	29.40	2.98	37.56	37.56	3.05	41.99	41.99	3.13	45.46	45.46	3.20
	1600	13.28	12.21	2.71	16.72	15.36	2.83	22.60	20.61	2.89	27.93	24.81	2.93	32.84	29.88	2.95	38.80	38.80	3.04	42.51	42.51	3.06	46.12	46.12	3.11

* The Btuh heating capacity values shown are net integrated values from which the defrost effect has been subtracted. The Btuh heating from supplement heaters should be added to those values to obtain total system capacity.

† The kW values include the compressor, outdoor fan motor, and indoor blower motor. The kW from supplement heaters should be added to these values to obtain total system kilowatts.

EDB— Entering Dry Bulb

NOTE: When the required data falls between the published data, interpolation may be performed. Extrapolation is not an acceptable practice.

Guide Specifications
GENERAL

Air-cooled, split-system heat pump
H5H8T

System Description

Outdoor-mounted, air-cooled, split-system heat pump unit suitable for ground or rooftop installation. Unit consists of a hermetic compressor, an air-cooled coil, propeller-type condenser fan, and a control box. Unit will discharge supply air upward as shown on contract drawings. Unit will be used in a refrigeration circuit to match up to a packaged fan coil or coil unit.

Quality Assurance

- Unit will be rated in accordance with the latest edition of AHRI Standard 210/240.
- Unit will be certified for capacity and efficiency, and listed in the latest AHRI directory.
- Unit construction will comply with latest edition of ANSI/ ASHRAE and with NEC.
- Unit will be constructed in accordance with UL standards and will carry the UL label of approval. Unit will have C-UL approval.
- Unit cabinet will be capable of withstanding Federal Test Method Standard No. 141 (Method 6061) 500-hr salt spray test.
- Air-cooled condenser coils will be leak tested and pressure tested.
- Unit constructed in ISO9001 approved facility.

Delivery, Storage, and Handling

- Unit will be shipped as single package only and is stored and handled per unit manufacturer's recommendations.

Warranty (for inclusion by specifying engineer)

- U.S. and Canada only.

PRODUCTS

Equipment

- Factory assembled, single piece, air-cooled heat pump unit. Contained within the unit enclosure is all factory wiring, piping, controls, compressor, refrigerant charge R-454B, and special features required prior to field start-up.

Unit Cabinet

- Unit cabinet will be constructed of galvanized steel, bonderized, and coated with post-paint.

Fans

Condenser fan will be direct-drive propeller type, discharging air upward.

- Condenser fan motors will be totally enclosed, 1-phase type with class B insulation and permanently lubricated bearings. Shafts will be corrosion resistant.
- Fan blades will be statically and dynamically balanced.
- Condenser fan openings will be equipped with coated steel wire safety guards.

Compressor

- Compressor will be hermetically sealed.
- Compressor will be mounted on rubber vibration isolators.

Condenser Coil

- Condenser coil will be air cooled.
- Coil will be constructed of aluminum fins mechanically bonded to copper or aluminum tubes which are then cleaned, dehydrated, and sealed.

Refrigeration Components

- Refrigeration circuit components will include liquid-line shutoff valve with sweat connections, vapor-line shutoff valve with sweat connections, system charge of R-454B refrigerant, POE compressor oil, accumulator and reversing valve.

Operating Characteristics

- The capacity of the unit will meet or exceed _____ Btuh at a suction temperature of _____ °F/°C. The power consumption at full load will not exceed _____ kW.
- Combination of the unit and the evaporator or fan coil unit will have a total net cooling capacity of _____ Btuh or greater at conditions of _____ CFM entering air temperature at the evaporator at _____ °F/°C wet bulb and _____ °F/°C dry bulb, and air entering the unit at _____ °F/°C.
- The system will have a SEER of _____ Btuh/watt or greater at DOE conditions.

Electrical Requirements

- Nominal unit electrical characteristics will be _____ v, single phase, 60 hz. The unit will be capable of satisfactory operation within voltage limits of _____ v to _____ v.
- Unit electrical power will be single point connection.
- Control circuit will be 24v.

Special Features

- Refer to section of this literature identifying accessories and descriptions for specific features and available enhancements.

Manufacturer reserves the right to change, at any time, specifications and designs without notice and without obligations.

System Design Summary

1. System must be installed with factory approved R454B Indoor unit only.
2. Factory authorized dissipation control board must be installed with indoor unit.
3. Intended for outdoor installation with free air inlet and outlet. Outdoor fan external static pressure available is less than 0.01-in. wc.
4. Minimum outdoor operating air temperature without low-ambient operation accessory is 55°F (12.8°C).
5. The maximum outdoor operating ambient in cooling mode is 125°F (51.67°C) when operating voltage is 230v.
6. Minimum outdoor operating air temperature for heating mode is –8°F (–22.2°C).
7. Maximum outdoor operating air temperature for heating mode is 66°F (18.9°C).
8. For reliable operation, unit must be level in all horizontal planes.
9. For interconnecting refrigerant tube lengths greater than 80 ft (23.4 m) and/or elevation differences between indoor and outdoor units greater than 20 ft (6.1 m), consult Residential Piping and Long Line Guideline and Service Manual available from equipment distributor.
10. If any refrigerant tubing is buried, provide a 6 in. (152.4 mm) vertical rise to the valve connections at the unit. Refrigerant tubing lengths up to 36 in. (914.4 mm) may be buried without further consideration. Do not bury refrigerant lines longer than 36 in. (914.4 mm).
11. Use only copper wire for electric connection at unit. Aluminum and clad aluminum are not acceptable for the type of connector provided.
12. Do not apply capillary tube indoor coils to these units.
13. Factory-supplied filter drier must be installed.

© 2024 Carrier. All rights reserved.