288BNV EVOLUTION® V
VARIABLE SPEED HEAT PUMP
WITH PURON® REFRIGERANT

bryant®

Installation Instructions

NOTE: Read the entire instruction manual before starting the installation.

TABLE OF CONTENTS

PAGE NO.

SAFETY CONSIDERATIONS 2
INSTALLATION RECOMMENDATIONS 2
INSTALLATION 3
Step 1 — Check Equipment and Job site 3
Step 2 — Install on Solid, Level Mounting Pad 3
Step 3 — Clearance Requirements 3
Step 4 — Operating Ambient 4
Step 5 — Elevate Unit 4
Step 6 — Making Piping Connections 4
Step 7 — Make Electrical Connections 4
Step 8 — Compressor Internal Crankcase Heater 8
Step 9 — Install Accessories 8
Step 10 — Start-Up 8
Step 11 — System Functions and Sequence of Operation 10
Step 12 — Check Charge 11
Step 13 — Pumpdown & Evacuation 15
MAJOR COMPONENTS 16
TROUBLESHOOTING 17
FINAL CHECKS 28
CARE AND MAINTENANCE 28
PURON® REFRIGERANT QUICK REFERENCE GUIDE 28

IMPORTANT: Effective January 1, 2015, all split system and packaged air conditioners must be installed pursuant to applicable regional efficiency standards issued by the Department of Energy.

Information in these installation instructions pertains only to 288BNV series units.

SAFETY CONSIDERATIONS

Improper installation, adjustment, alteration, service, maintenance, or use can cause explosion, fire, electrical shock, or other conditions which may cause death, personal injury, or property damage. Consult a qualified installer, service agency, or your distributor or branch for information or assistance. The qualified installer or agency must use factory-authorized kits or accessories when modifying this product. Refer to the individual instructions packaged with the kits or accessories when installing.

Follow all safety codes. Wear safety glasses, protective clothing, and work gloves. Use quenching cloth for brazing operations. Have fire extinguisher available. Read these instructions thoroughly and follow all warnings or cautions included in literature and attached to the unit. Consult local building codes and current editions of the National Electrical Code (NEC) NFPA 70. In Canada, refer to current editions of the Canadian electrical code CSA 22.1.

Recognize safety information. This is the safety-alert symbol ⚠ When you see this symbol on the unit and in instructions or manuals, be alert to the potential for personal injury. Understand these signal words; DANGER, WARNING, and CAUTION. These words are used with the safety-alert symbol. DANGER identifies the most serious hazards which **will** result in severe personal injury or death. WARNING signifies hazards which **could** result in personal injury or death. CAUTION is used to identify unsafe practices which **would** result in minor personal injury or product and property damage. NOTE is used to highlight suggestions which **will** result in enhanced installation, reliability, or operation.

⚠ CAUTION

CUT HAZARD

Failure to follow this caution may result in personal injury.

Sheet metal parts may have sharp edges or burrs. Use care and wear appropriate protective clothing and gloves when handling parts.

⚠ WARNING

UNIT OPERATION AND SAFETY HAZARD

Failure to follow this warning could result in personal injury or equipment damage.

Puron® refrigerant systems operate at higher pressures than standard R-22 systems. Do not use R-22 service equipment or components on Puron® refrigerant equipment.

⚠ WARNING

ELECTRICAL SHOCK HAZARD

Failure to follow this warning could result in personal injury or death.

Before installing, modifying, or servicing system, main electrical disconnect switch must be in the OFF position. There may be more than 1 disconnect switch. Lock out and tag switch with a suitable warning label.

Indoor Thermostat Control Options

Model	Evolution Connex Control	Standard HP Thermostat
288BNV	Yes*	Yes**

* Requires model SYSTXBBECC01, SYSTXBBECW01 or SYSTXBBECN01 with version 11 software or newer.

* Version 12 software or newer required for model size 13.

** Using standard HP thermostat limits functionality of system.

⚠ WARNING

ELECTRICAL HAZARD - HIGH VOLTAGE!

Failure to follow this warning could result in personal injury or death.

Electrical components may hold charge. DO NOT remove control box cover for 2 minutes after power has been removed from unit.

PRIOR TO TOUCHING ELECTRICAL COMPONENTS:

Verify zero (0) voltage at inverter connections shown on inverter cover.

⚠ WARNING

EXPLOSION HAZARD

Failure to follow this warning could result in death, serious personal injury, and/or property damage.

Never use air or gases containing oxygen for leak testing or operating refrigerant compressors. Pressurized mixtures of air or gases containing oxygen can lead to an explosion.

Inverter Cover

IMPORTANT: The inverter cover should NEVER be removed because there is no reason to remove the inverter cover to access the inverter. The inverter has limited serviceability. Refer to Service Manual for details on field replaceable parts. A replacement cover is provided with a replacement inverter.

INSTALLATION RECOMMENDATIONS

In some cases noise in the living area has been traced to gas pulsations from improper installation of equipment.

1. Locate unit away from windows, patios, decks, etc. where unit operation sound may disturb customer.
2. In noise sensitive applications (such as bedrooms), when a lineset is mounted to ceiling joists or floor joists, the outdoor unit must be located at least 10 ft (3.05 m) away. If this is not possible, create a line set configuration with enough bends to provide 10 ft (3.05 m) of total line set length outside the dwelling
3. Ensure that vapor and liquid tube diameters are appropriate for unit capacity.
4. Run refrigerant tubes as directly as possible by avoiding unnecessary turns and bends.
5. Leave some slack between structure and unit to absorb vibration.
6. When passing refrigerant tubes through the wall, seal opening with RTV or other pliable silicon-based caulk (see Fig. 1).

7. Avoid direct tubing contact with water pipes, duct work, floor joists, wall studs, floors, and walls.
8. Do not suspend refrigerant tubing from joists and studs with a rigid wire or strap which comes in direct contact with tubing (see Fig. 1).
9. Ensure that tubing insulation is pliable and completely surrounds vapor tube.
10. When necessary, use hanger straps which are 1 in. wide and conform to shape of tubing insulation. (See Fig. 1.)
11. Isolate hanger straps from insulation by using metal sleeves bent to conform to shape of insulation.
12. If these installation recommendations were not followed, gas pulsation may be transmitted through improperly mounted line sets. In this case, an external vapor line muffler accessory (part no. LM10KK003) is available to minimize noise due to gas pulsations.

⚠ CAUTION

EQUIPMENT DAMAGE HAZARD

Failure to follow this caution may result in equipment damage.

If proper lineset routing techniques are not followed, variable speed systems can be susceptible to lineset transmitted noise inside the dwelling and, in extreme cases, tubing breakage.

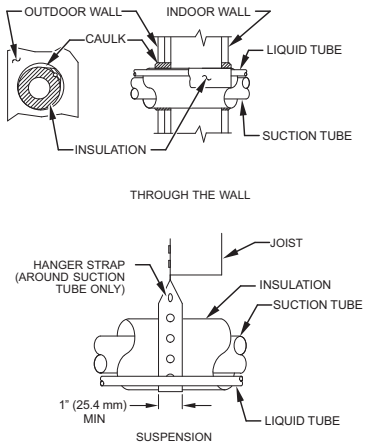

Fig. 1 - Connecting Tubing Installation

The outdoor unit contains the correct amount of refrigerant charge for operation with AHRI rated indoor units when connected by 15 ft (4.57 m) of field-supplied or factory accessory tubing.

Adjust refrigerant charge by adding or removing the charge to/from the unit depending on lineset length and indoor unit as calculated and displayed on the UI. The user interface (UI) calculates required charge adjustment and total system charge required. For proper unit operation, check refrigerant charge using charging information in the Check Charge section of this instruction.

IMPORTANT: Liquid-line size is 3/8-in. OD for all 288BNV applications. The maximum allowable equivalent line set length is 100 ft. (30.5 m).

IMPORTANT: Always install the factory-supplied liquid-line filter drier. Obtain replacement filter driers from your distributor or branch.

INSTALLATION

Specifications for this unit in residential new construction market require the outdoor unit, indoor unit (including metering device), refrigerant tubing sets, and filter drier listed in pre-sale literature. There can be no deviation. Consult the Service Manual – Air Conditioners and Heat Pumps Using Puron® Refrigerant to obtain required unit changes for specific applications and for R-22 retrofit.

Step 1 — Check Equipment and Job Site

Unpack Unit

Move to final location. Remove carton taking care not to damage unit.

Inspect Equipment

File claim with shipping company prior to installation if shipment is damaged or incomplete. Locate unit rating plate on unit corner panel. It contains information needed to properly install unit. Check rating plate to be sure unit matches job specifications.

Step 2 — Install on a Solid, Level Mounting Pad

If conditions or local codes require the unit be attached to pad, tie down bolts should be used and fastened through knockouts provided in unit base pan. Refer to unit mounting pattern in Fig. 2 to determine base pan size and knockout hole location.

For hurricane tie downs, contact distributor for details and PE (Professional Engineer) Certification, if required.

On rooftop applications, mount on level platform or frame. Place unit above a load-bearing wall and isolate unit and tubing set from structure. Arrange supporting members to adequately support unit and minimize transmission of vibration to building. Consult local codes governing rooftop applications.

Roof mounted units exposed to winds above 5 mph may require wind baffles. Consult the Service Manual - Residential Split System Air Conditioners and Heat Pumps Using Puron® Refrigerant for wind baffle construction.

NOTE: Unit must be level to within ±2° (±3/8 in./ft,±9.5 mm/m.) per compressor manufacturer specifications.

Step 3 — Clearance Requirements

When installing, allow sufficient space for airflow clearance, wiring, refrigerant piping, and service. Allow 24 in. (609.6 mm) clearance to service end of unit and 48 in. (1219.2 mm) (above unit. For proper airflow, a 6-in. (152.4 mm) clearance on 1 side of unit and 12-in. (304.8 mm) on all remaining sides must be maintained. Maintain a distance of 24 in. (609.6 mm) between units. Position so water, snow, or ice from roof or eaves cannot fall directly on unit.

On rooftop applications, locate unit at least 6 in. (152.4 mm) above roof surface.

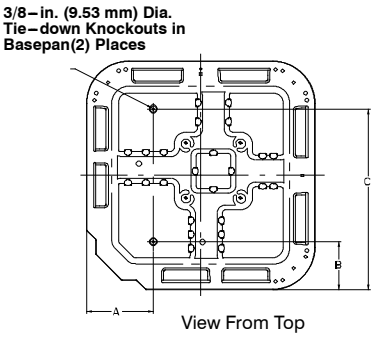

UNIT BASE PAN Dimension in. (mm)	TIEDOWN KNOCKOUT LOCATIONS in. (mm)		
	A	B	C
23 X 23 (596 X 596)	7–13/16 (198)	4–7/16 (102)	18–1/8 (458)
31.2 X 31.2 (792 X 792)	9–1/8 (232)	6–9/16 (167)	24–11/16 (627)

Fig. 2 - Tie-down Knockout Locations

Step 4 — Operating Ambient

The minimum outdoor operating ambient in cooling mode is 40°F (4.4°C) with Evolution Connex Control, 55°F (12.8°C) with non-communicating systems. The maximum outdoor operating ambient in cooling mode is 115°F (46.1°C). Compressor protections will prevent cooling mode operation below minimum ambient temperature range. The system may operate in cooling up to 125°F (52°C) (52C) with significant reduced capacity cutback above 115°F (46.1°C). Refer to Product Data "Detailed Cooling Capacity" table. Low ambient cooling operation is not currently available. The maximum heating operation ambient is 66°F (18.9°C). Compressor protections will prevent starting below 10°F (-12.2°C) and operation below 2°F (-16.7°C).

Step 5 — Elevate Unit

Elevate unit per local climate and code requirements to provide clearance above estimated snowfall level and ensure adequate drainage of unit.

⚠ CAUTION

UNIT OPERATION HAZARD

Failure to follow this caution may result in equipment damage or improper operation.

Do not allow water and/or ice to build up in base pan.

⚠ CAUTION

UNIT OPERATION HAZARD

Failure to follow this caution may result in equipment damage or improper operation.

Locate the unit in such a way that it is stable in all circumstances including adverse weather conditions.

Step 6 — Make Piping Connections

⚠ WARNING

PERSONAL INJURY AND UNIT DAMAGE HAZARD

Failure to follow this warning could result in personal injury or death.

Relieve pressure and recover all refrigerant before system repair or final unit disposal. Use all service ports and open all flow-control devices, including solenoid valves.

⚠ CAUTION

UNIT DAMAGE HAZARD

Failure to follow this caution may result in equipment damage or improper operation.

Do not leave system open to atmosphere any longer than minimum required for installation. POE oil in compressor is extremely susceptible to moisture absorption. Always keep ends of tubing sealed during installation.

⚠ CAUTION

UNIT DAMAGE HAZARD

Failure to follow this caution may result in equipment damage or improper operation.

If ANY refrigerant tubing is buried, provide a 6 in. (152.4 mm) vertical rise at service valve. Refrigerant tubing lengths up to 36 in. (914.4 mm) may be buried without further special consideration. Do not bury lines longer than 36 in. (914.4 mm).

Outdoor units may be connected to indoor section using accessory tubing package or field-supplied refrigerant grade tubing of correct size and condition. For tubing requirements between 80 - 100 ft. (24.38 - 30.48 m), capacity and performance losses can occur. Follow the pipe sizing recommendations in the 288BNV Product data to manage these losses. This unit shall not be installed with greater than 100 ft (30.48 m) of equivalent line length.

Refer to Table 1 for field tubing diameters. No additional accessories are required for line lengths between 80 - 100 ft. (24.4 - 30.5 m) on this product.

Table 1 – Refrigerant Connections and Recommended Liquid and Vapor Tube Diameters (in.)

UNIT SIZE	LIQUID		VAPOR†		
	Connection Diameter	Tube Diameter	Connection Diameter	Max (Rated) Diameter	Minimum Tube Diameter
13, 24	3/8	3/8	3/4	3/4	5/8
25	3/8	3/8	3/4	7/8	5/8
36	3/8	3/8	3/4	7/8	5/8
37	3/8	3/8	7/8	7/8	5/8
48	3/8	3/8	7/8	(1–1/8)	3/4
60	3/8	3/8	7/8	(1–1/8)	3/4

* *24A unit height is 38–7/16", 24B unit height is 31–5/8

† Units are rated with 25 ft. (7.6 m) of lineset. See Product Data sheet for performance data when using different size and length line sets.

Notes:

1. Do not apply capillary tube indoor coils to these units.

Outdoor Unit Connected to Factory-Approved Indoor Unit

Outdoor unit contains correct system refrigerant charge for operation with factory-approved, AHRI-rated indoor units when connected by 15 ft. (4.57 m) of field-supplied or factory-accessory tubing, and factory-supplied filter drier. Check refrigerant charge for maximum efficiency.

NOTE: If the indoor furnace coil width is more than the furnace casing width, refer to the indoor coil Installation Instructions for transition requirements.

Install Liquid-Line Filter Drier Indoor

Refer to Fig. 3 and install filter drier as follows:

1. Braze 5-in. (127 mm) liquid tube to the indoor coil.
2. Wrap filter drier with damp cloth.
3. Braze filter drier to above 5-in. (127 mm) liquid tube.
4. Connect and braze liquid refrigerant tube to the filter drier.

⚠ CAUTION

UNIT DAMAGE HAZARD

Failure to follow this caution may result in unit damage or improper operation.

Installation of filter drier in liquid line is required.

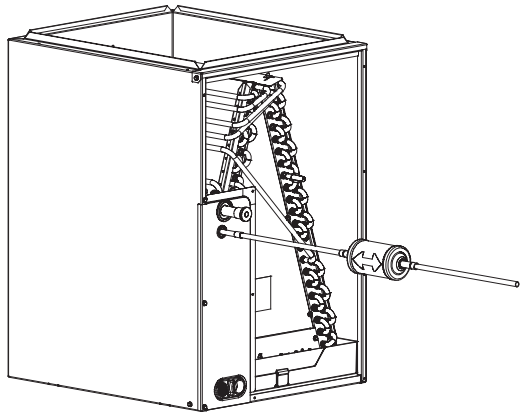

A05227

Fig. 3 - Liquid-Line Filter Drier

Refrigerant Tubing connection Outdoor

Connect vapor tube to fitting on outdoor unit vapor service valves (see Table 1).

No Installation of Adapter Tube

Although it is a heat pump this unit has a standard AC liquid service valve. An EXV inside the unit serves as the heating expansion device.

Sweat Connections

⚠ CAUTION

UNIT DAMAGE HAZARD

Failure to follow this caution may result in equipment damage or improper operation.

- Use a brazing shield
- Wrap service valves with wet cloth or heat sink material.

Use refrigerant grade tubing. Service valves are closed from factory and ready for brazing. After wrapping service valve with a wet cloth, braze sweat connections using industry accepted methods and materials. Consult local code requirements. Refrigerant tubing and indoor coil are now ready for leak testing. This check should include all field and factory joints.

Evacuate Refrigerant Tubing and Indoor Coil

⚠ CAUTION

UNIT DAMAGE HAZARD

Failure to follow this caution may result in equipment damage or improper operation.

Never use the system compressor as a vacuum pump.

Refrigerant tubes and indoor coil should be evacuated using the recommended deep vacuum method of 500 microns. The alternate triple evacuation method may be used. See Service Manual for triple evacuation method. Always break a vacuum with dry nitrogen prior to opening the refrigerant system for servicing.

Deep Vacuum Method

The deep vacuum method requires a vacuum pump capable of pulling a vacuum of 500 microns and a vacuum gauge capable of accurately measuring this vacuum depth. The deep vacuum method is the most positive way of assuring a system is free of air and liquid water. (See Fig. 4)

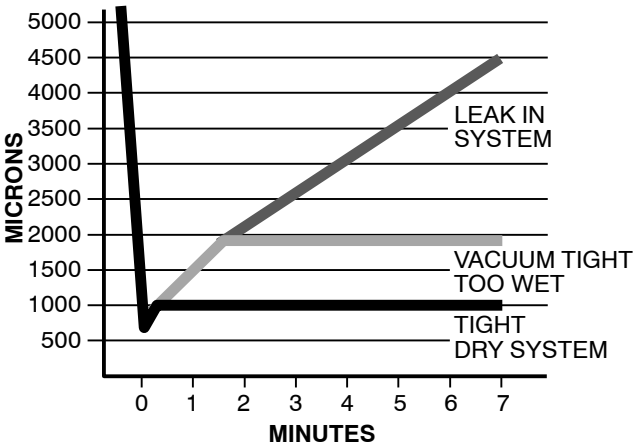

A95424

Fig. 4 - Deep Vacuum Graph

Final Tubing Check

IMPORTANT: Check to be certain factory tubing on both indoor and outdoor unit has not shifted during shipment. Ensure tubes are not rubbing against each other or any sheet metal. Pay close attention to feeder tubes, making sure wire ties on feeder tubes are secure and tight.

Step 7 — Make Electrical Connections

⚠ WARNING

ELECTRICAL SHOCK HAZARD

Failure to follow this warning could result in personal injury or death.

Do not supply power to unit with compressor terminal box cover removed.

Be sure field wiring complies with local and national fire, safety, and electrical codes, and voltage to system is within limits shown on unit rating plate. Contact local power company for correction of improper voltage. See unit rating plate for recommended circuit protection device.

NOTE: Operation of unit on improper line voltage constitutes abuse and could affect unit reliability. See unit rating plate. Do not install unit in system where voltage may fluctuate above or below permissible limits.

NOTE: Use copper wire only between disconnect switch and unit.

NOTE: Install branch circuit disconnect of adequate size per NEC to handle unit starting current. Locate disconnect within sight from and readily accessible from unit, per Section 440-14 of NEC.

Route Ground and Power Wires

Remove access panel to gain access to unit wiring. Extend wires from disconnect through power wiring hole provided and into unit control box.

⚠ WARNING

ELECTRICAL SHOCK HAZARD

Failure to follow this warning could result in personal injury or death.

The unit cabinet must have an uninterrupted or unbroken ground to minimize personal injury if an electrical fault should occur. The ground may consist of electrical wire or metal conduit when installed in accordance with existing electrical codes.

Connect Ground and Power Wires

Connect ground wire to ground connection in control box for safety. Connect power wiring to contactor as shown in Fig. 5.

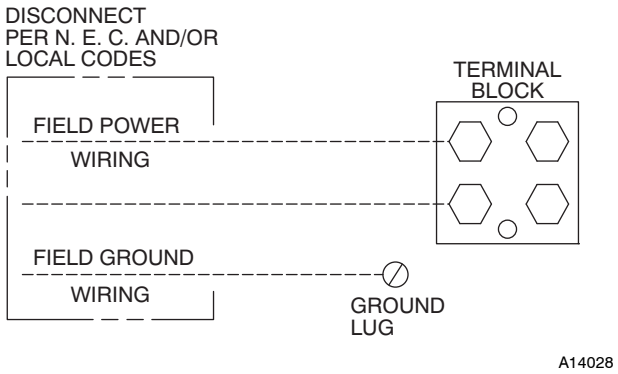

Fig. 5 - Line Power Connections

Connect Evolution Control Wiring

Connect to Evolution connections. Only two wires (AB) or (GN,YL) to Evolution capable indoor unit (furnace or fan coil) are required. Connecting C (WT) is recommended if wires are available (see Fig. 6). This will reduce the chance of communication issues. Unused low voltage wires should be bundled together and terminated with a wire nut at each end. The end nearest the indoor coil should be connected to C terminal.

IMPORTANT: This system requires the power supplied to the outdoor unit, and the indoor unit, for the wall control to communicate with the outdoor unit.

Connect Control Wiring- Non-Communicating

4 wires are required when connecting 288BNV models to non-communicating 2-stage thermostats. Use Fig. 7 For required connections. Unit is configured by factory for Evolution communicating control. To wire unit for non-communicating control, disconnect the green (GN) and yellow (YL) wires from 4-pin green communication plug and connect appropriate wires to low voltage terminal block. Use wire nuts to attach thermostat wire to LVCH harness.

General Information

Use 18-20 solid AWG color-coded, insulated (35°C minimum) wire for low voltage control wires. All wiring must be NEC Class 2 and must be separated from incoming power leads.

Installations using greater than 200 feet of low voltage wiring should consult the Evolution wall control manual for additional guidelines regarding daisy chaining wiring method and terminating resistors. Never route control wiring in parallel to high voltage power wires when possible as electrical noise may transfer and generate nuisance fault codes. Where low voltage control and high voltage wires must cross paths, do so at perpendicular angles to eliminate transferred noise.

If further communication issues exist, consider using shielded low voltage wires and only connect shielding to C terminal at end nearest indoor coil. Use furnace transformer, fan coil transformer, or accessory transformer for control power requirement of system accessories external to the OD unit. The outdoor unit has its own transformer power.

Final Wiring Check

IMPORTANT: Check factory wiring and field wire connections to ensure terminations are secured properly. Check wire routing to ensure wires are not in contact with tubing, sheet metal, etc.

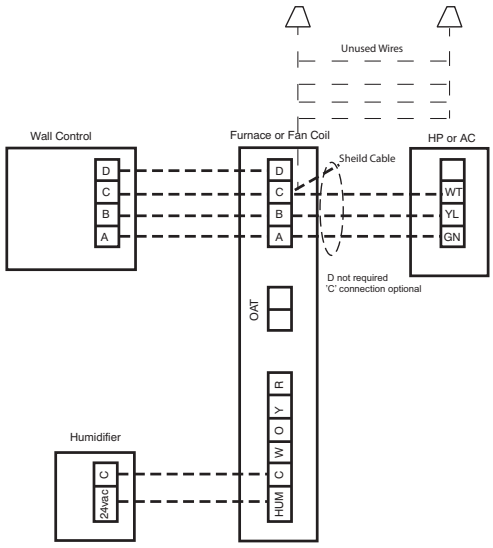

Fig. 6 - Evolution Furnace or Fan Coil Wiring with Communicating Variable Speed HP

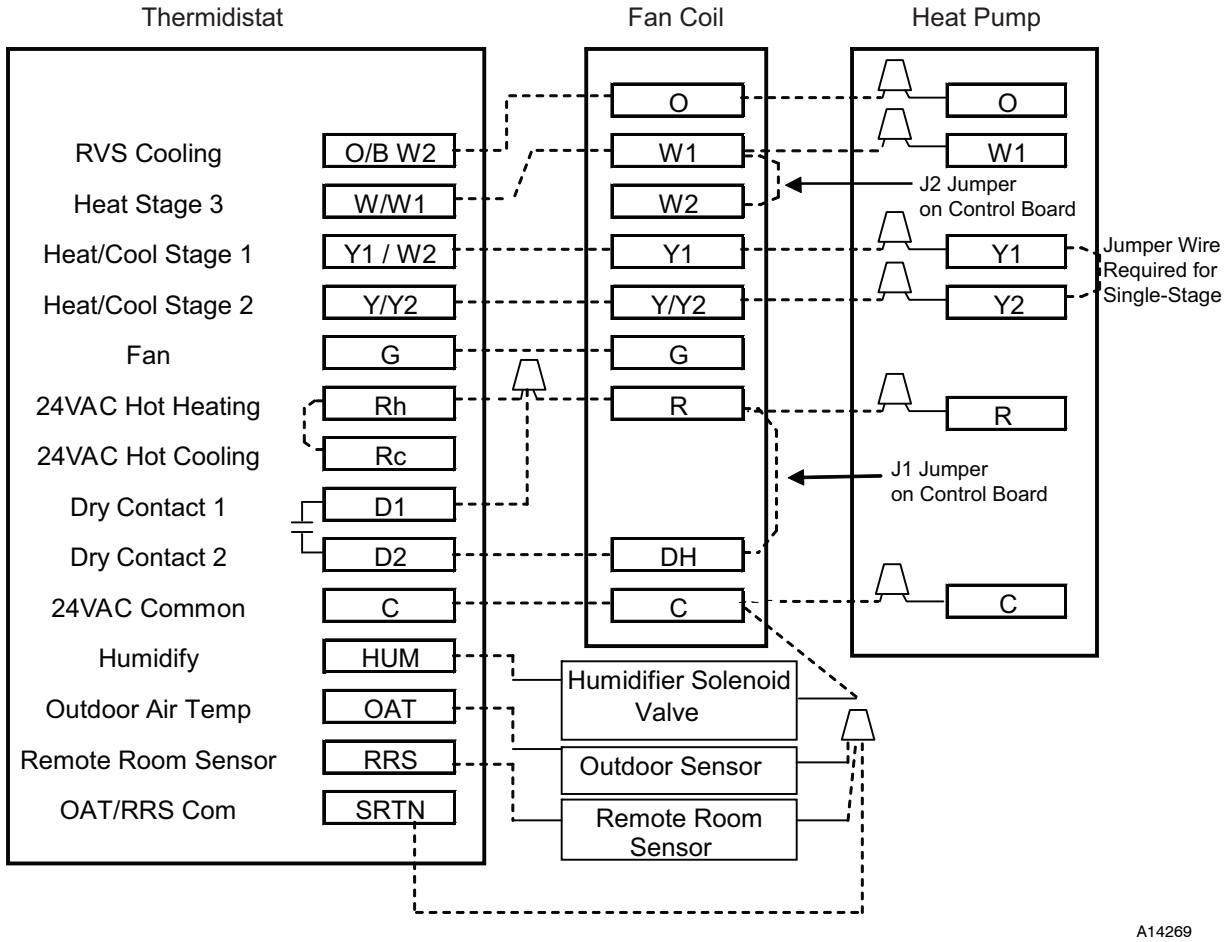

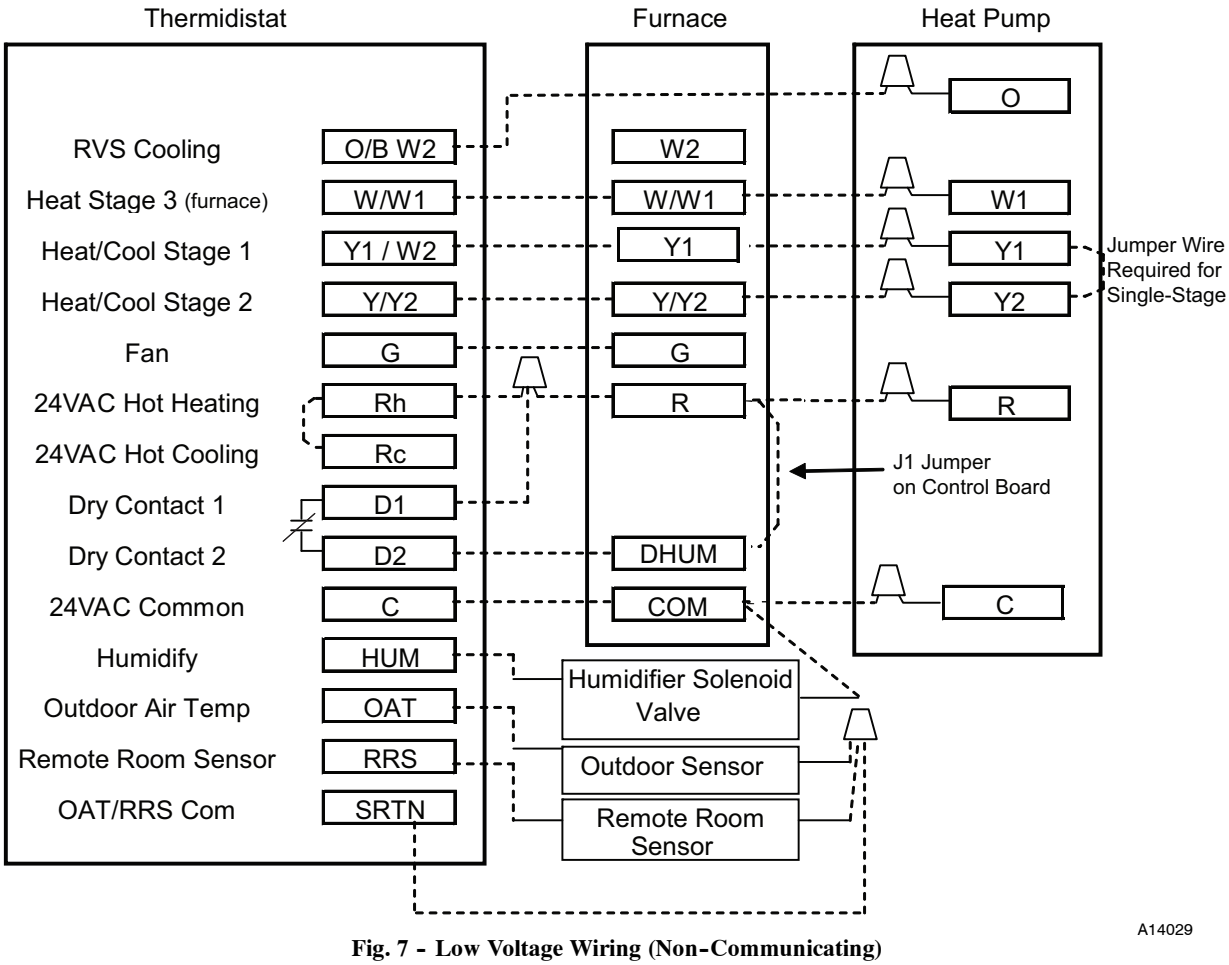

Fig. 7 - Low Voltage Wiring (Non-Communicating)

Step 8 — Compressor Crankcase Heater

This compressor has an internal crankcase heater. Furnish power to the unit a minimum of 24 hr before starting the unit for the first time.

Upon initial start-up of unit, status code 68 will be generated and system will operate at stage 2 for 11 minutes. This operation is important to system reliability and cannot be bypassed. Each time high voltage is removed and reapplied this behavior will be repeated.

To furnish power to heater only, set thermostat to OFF and close electrical disconnect to outdoor unit.

Power is not required to the indoor unit or User Interface for proper operation of heater. Crankcase heater will be intelligently energized as needed between operations, even when the UI or thermostat and indoor unit is not installed, as long as there is power to the outdoor unit.

Airflow Setup for Evolution Connex Control Furnace or FE Fan Coil (communicating)

This system can only be installed with Evolution-capable indoor and Evolution Connex User Interface (UI) SYSTXBBECC01, SYSTXBBECW01 or SYSTXBBECN01 with version 11 software or newer. Version 12 or newer software required on model size 13. When using an Evolution Connex User Interface, airflow is automatically selected based on equipment size. The user has the option of selecting Comfort, Efficiency and Max airflow for Heating and/or Cooling modes. These should be selected based on balance between the homeowner's comfort and energy consumption expectations. See User Interface Installation Instructions for additional available adjustments.

Due to using a communicating control with the fan coil or the furnace, dip switch adjustments are not necessary. The outdoor unit configuration and the indoor airflows are determined by communicating control setup.

Airflow Setup for Non-communicating Fan Coil

The system can be installed with a standard 2-stage heat pump thermostat and FV4C fan coil without additional accessories. Select appropriate unit size on fan coil Easy select board.

For replacement applications with older FV4(A,B), FK4 and 40FK fan coils, the model plug in the outdoor unit must be changed per Table 2 below.

The model plug adjusts compressor speed to match available low stage indoor airflow.

NOTE: 288BNV013 is AHRI rated with communicating indoor units only due to low stage airflow requirements.

Table 2 – Alternate Model Plug

FV4(A,B), FK4, 40FK Fan Coil Models* (Requires outdoor model plug change)		
288BNV	**Factory Model Plug # HK70EZ*** **	**Required Accessory Model Plug # HK70EZ*** **
24	009	015
25	001	016
36	002	017
48	003	018
60	004	019

* FK4 and 40FK also require a TXV change. See accessory list for approved TXV.

Airflow Setup for Non-communicating Furnaces

For installations with non-communicating furnaces, set airflows to 350-400 cfm/nominal ton in high stage and 70-80 percent of high stage airflow in low stage.

Step 9 — Install Accessories

No refrigeration circuit accessories are required or are available for installation within the unit. External to the unit, the same accessories such as support feet, snow rack, wind baffle etc., available on other Bryant units, can also be used on this line of product. For models utilizing 23 inch x 23 inch base pans, it is recommended to use 5 support feet in order to fully support unit. See Fig. 8. Refer to the individual Installation Instructions packaged with kits or accessories when installing.

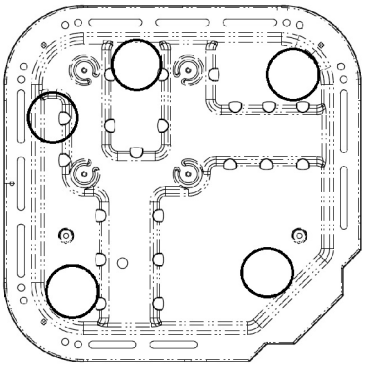

A14008

Fig. 8 - Recommended Support Feet Location
(for 23" x 23" basepan)

Step 10 — Start-Up

⚠ CAUTION

UNIT OPERATION AND SAFETY HAZARD

Failure to follow this caution may result in minor personal injury, equipment damage or improper operation.

Observe the following:

1. Do not overcharge system with refrigerant.
2. Do not operate unit in a vacuum or at negative pressure.
3. Do not disable low pressure transducer or system safety devices such as discharge thermistor or the high pressure switch.
4. Dome temperatures may be hot.
5. Discharge thermistor is engaged tight on the discharge tube.

⚠ CAUTION

PERSONAL INJURY HAZARD

Failure to follow this caution may result in personal injury.

Wear safety glasses, protective clothing, and gloves when handling refrigerant.

⚠ CAUTION

ENVIRONMENTAL HAZARD

Failure to follow this caution may result in environmental damage.

Federal regulations require that you do not vent refrigerant to the atmosphere. Recover during system repair or final unit disposal.

Follow these steps to properly start up the system:

1. After system is evacuated, close the disconnects to energize indoor unit, outdoor unit, and User Interface (UI). Do not attempt to operate the system in heating or cooling mode at this time. Mode: OFF.
2. Navigate to the service area by pressing MENU from main screen. Scroll down to service icon and hold until icon turns green. Once in the Installation and Service menu, select Refrigerant Charging, then select Charging Cooling.

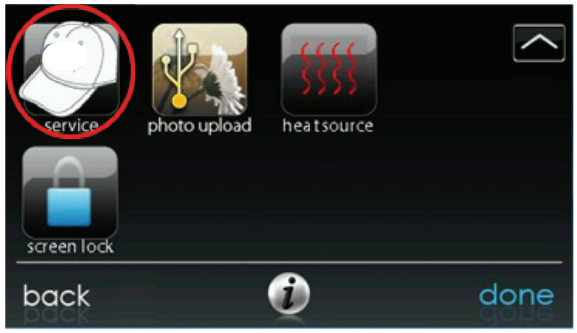

A14566

Fig. 9 - Service Icon

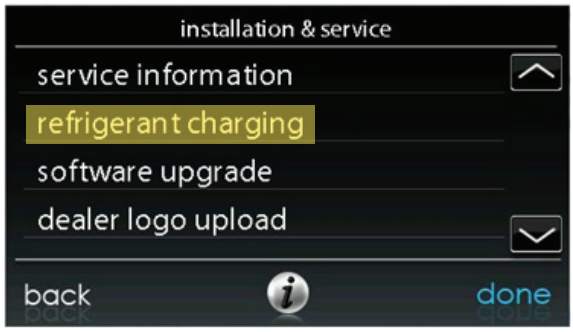

A14567

Fig. 10 - Select Refrigerant Charging

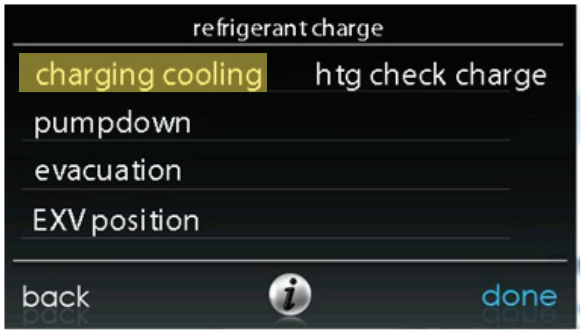

A14568

Fig. 11 - Select Charging Subcooling

3. If installed indoor unit is a furnace coil, model should have been selected manually during the initial discovery process. Press the text "line set" and "vapor line" to choose line set length and vapor line diameter. After complete, press "next" to advance to next screen. The "weigh in" value is the total charge weight and includes refrigerant shipped in unit. If "weigh in" text is selected the additional charge required is broken down into the line set adder and indoor coil size adder.

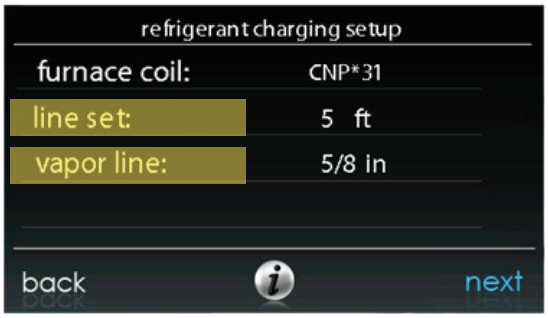

A14569

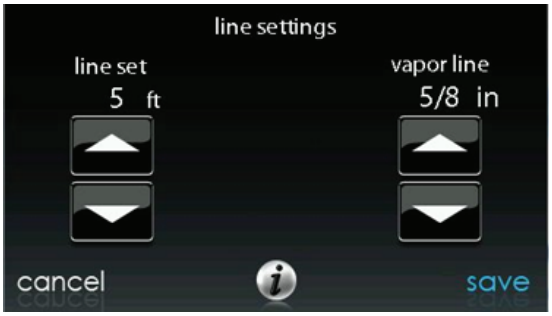

A14570

Fig. 12 - Select Line Set Length & Vapor Line Diameter

⚠ CAUTION

UNIT OPERATION HAZARD

Failure to follow this caution may result in improper unit operation.

For new installations only. Add additional refrigerant due to indoor coil, line set, and vapor line settings. Outdoor unit is pre-charged with weight of refrigerant shown on rating plate.

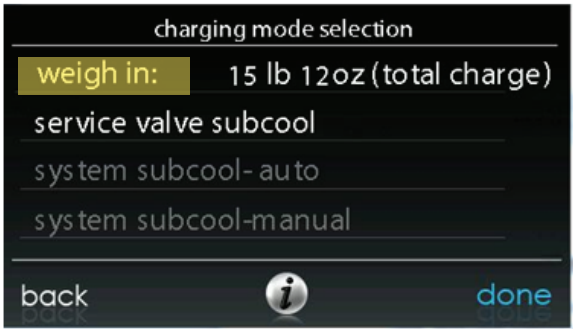

A14571

Fig. 13 - Weigh In Value

4. Add additional required charge for line set and indoor coil size then fully open liquid and vapor service valves. If lineset is less than 15 feet (4.57 m) in length, charge removal may be necessary and will be shown as a negative number on UI screen. UI screen displays charge in lb and oz, while unit rating plate is in decimal format.

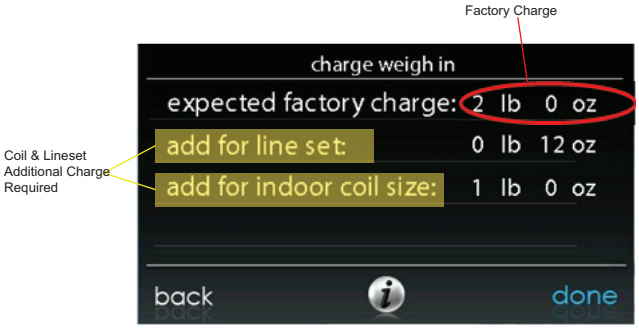

A14572

Fig. 14 - Additional Required Charge

Step 11 — System Functions and Sequence of Operation

The 288BNV models utilize either Evolution Connex Communicating User Interface (UI) or conventional HP thermostat. When using UI controls, a call for cooling will energize the outdoor fan and compressor to run at lowest cooling demand. If this does not satisfy cooling demand, the system will ramp up in stages until it satisfies the demand. After coping with the higher demand, the unit returns to lower capacity operation until the demand is satisfied or until an increase in demand. When using a conventional thermostat, the thermostat controls the staging of outdoor unit.

When all demand is satisfied, the compressor will shut off. As the unit operates at lower capacity, system vapor (suction) pressure will be higher than it is during a standard single-stage system operation or during a higher capacity operation.

The user interface (UI) displays the operation mode and fault codes as specified in the troubleshooting section. See Table 7 for codes and definitions.

The conventional thermostat inputs are designed to work with most indoor units. See AHRI for approved combinations. Connections are Y/Y2, Y1, O, R, W, and C. Depending on thermostat and indoor unit, the system will operate at 1 or 2 capacities in heating or cooling mode.

NOTE: Only one code will be displayed on the outdoor unit control board (the most recent, with the highest priority). The latest codes are stored and can be accessed via the UI.

Upon a call for cooling through the UI (or the Y1 and/or Y2 connections in a non-communicating system), the Application Operation Control (AOC) board (see Fig. 33) will open the EXV to the fully open position. For heating, the AOC board will open the EXV to a preset position, depending upon the conditions. Based upon the indoor space demand and the outdoor conditions, the UI will then request a compressor speed and outdoor fan motor speed.

If the conditions are correct for operation, the control board will allow the requested operation to begin, but if the control board determines that the conditions are not correct, the board will decide what other operation nearing that condition is acceptable. The inverter Motor Operational Control (MOC) then outputs the three-phase PWM signal and frequency that gently ramps the compressor speed up to stage 2, and then will adjust to the demanded speed. The gentle ramp-up results in no locked rotor amps to the compressor motor. The unit 0 for compressor LRA will be stamped N/A (not applicable).

During operation, the AOC monitors itself and the compressor operation along with the system pressures and temperatures. The MOC board monitors the temperature, current and operational status of the compressor, OD fan and the inverter itself. During operation, the compressor speed will be adjusted to meet the changes to the demand.

When the demand is satisfied, the inverter will ramp-down the compressor speed and stop. The EXV will step down to the completely closed position.

When the compressor stops, a 3.5 minute Time Guard period is activated which is followed by opening of the PEV valve for 150 seconds to equalize the refrigerant pressure difference between the high and low sides of the compressor. Upon equalizing the refrigerant pressure, and an additional 15 seconds of the Time Guard period, the compressor will be ready for the next operational demand.

If there is a power cycle, the Pressure Equalizer Valve (PEV) will open for 150 seconds before the compressor start-up. Opening the PEV valve returns the discharge gas directly back to the suction side of the compressor. This is done in either cooling or heating mode so that the rotary compressor will start with a very low pressure differential.

The 3.5 minute Time Guard can be bypassed by momentarily shorting the Forced Defrost pins. Only the 3.5 minute time delay can be bypassed. Because it is important for compressor reliability, the 150-second PEV delay cannot be bypassed.

Crankcase Heater Operation

This unit has an internal crankcase heater that will be energized during the off cycle and is intelligently demanded by the system to prevent the compressor from being the coldest part of the system thus enhancing the reliability. The crankcase heater will function as needed any time the outdoor unit is powered. The indoor unit and UI do not need to be installed for the crankcase heater to operate properly.

The compressor windings will occasionally be energized during the OFF cycle (depending on the length of the OFF cycle) to start the stator heat operation, thus maintaining a sump temperature that is essential for compressor reliability. The compressor will not run during this process.

Outdoor Fan Motor Operation

The outdoor unit control (Fig. 15) energizes outdoor fan anytime the compressor is operating, except for defrost. The OD fan motor is variable speed. The speed will change depending on the ambient temperature and the cooling or heating capacity required.

Time Delays

The unit time delays include:

- 3.5 minute time delay after last cycle, initial power up, return from brown-out condition. To bypass this feature, momentarily short and release Forced Defrost pins.
- At the end of every compressor ON cycle, there will be 150 seconds of PEV open period for pressure equalization followed by 15 seconds of PEV Off period before the next compressor ON cycle. This delay cannot be bypassed as it helps compressor reliability.
- 15 second delay at termination of defrost before the auxiliary heat is de-energized.
- See Table 7 for other delay information.

Communication and Status Function Lights

Evolution Connex Control, Green Communications (COMM)Light

A green LED (COMM light) on the outdoor board (see Fig. 15) indicates successful communication with the other system products. The green LED will remain OFF until communication is established. Once a valid command is received, the green LED will turn ON continuously. If no communication is received within 2 minutes, the LED will be turned OFF until the next valid communication. The green LED will be turned off when using a standard 2-stage non-communicating heat pump thermostat.

Amber Status Light

Amber colored **STATUS light** indicates operation and error status. See Table 7 for definitions.

- Two minute time delay to return to standby operation from last valid communication.

Defrost

This user interface (UI) offers 5 possible defrost interval times: 30, 60 and 90 minutes, or AUTO. The default is AUTO.

Defrost interval times: 30, 60, and 90 minutes or AUTO are selected by the Evolution Connex Control User Interface if using UI. The 90 and 120 minute selection will default to 60 minutes at ambient below 37 degrees. The 120 minute selection will default to 90 minutes at ambient above 37 degrees.

If using non-communicating thermostat, defrost intervals are set using dip switches on outdoor control board (see Fig. 15). AUTO defrosts adjusts the defrost interval time based on the last defrost time as follows:

- When defrost time <5 minutes, the next defrost interval=90 minutes. (outdoor temperature above 37°F)
- When defrost time 5-7 minutes, the next defrost interval=60 minutes.
- When defrost time >7 minutes, the next defrost interval=30 minutes.

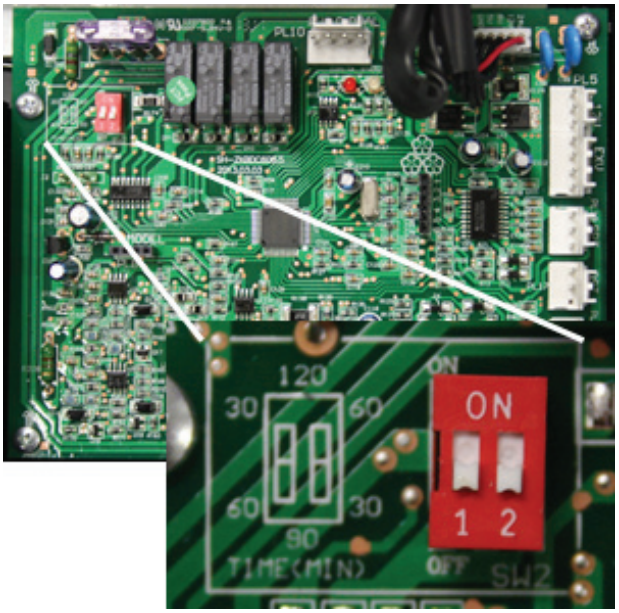

A14021

Fig. 15 - AOC Control Board

The control board accumulates compressor run time. As the accumulated run time approaches the selected defrost interval time, the control board monitors the coil temperature sensor for a defrost demand. If a defrost demand exists, a defrost cycle will be initiated at the end of the selected time interval. A defrost demand exists when the coil temperature is at or below 32°F (0°C) for 4 minutes during the interval. If the coil temperature does not reach 32°F (0°C) within the interval, the interval timer will be reset and start over.

- Upon initial power up the first defrost interval is defaulted to 30 minutes. Remaining intervals are at selected times.
- Defrost is only allowed to occur below 50°F (10°C) outdoor ambient temperature.

The defrost cycle is terminated as described below.

- When OAT is > 25°F (+3.89°C), defrost terminates if outdoor coil temperature (OCT) > 60°F (+15.6°C). And a minimum of 2 minutes defrost length.
- When OAT ≥ 25°F (+3.89°C), defrost will terminate if OCT is >45°F (+4.4°C) and a minimum of 2 minutes defrost length.
- Or 10 minutes has passed.

At the defrost termination, the outdoor fan will turn on 10 seconds before the reversing valve switching.

NOTE: Compressor speed during defrost will go to defrost speed.

Step 12 — Check Charge

Charge in CHARGING mode (communicating only)

Unit is factory charged for 15ft (4.57 m) of lineset. If any refrigerant charge adjustment is required due to the user inputted line set length or indoor coil, the UI will calculate and display the target subcooling and the amount of additional charge to be added. Therefore, the UI is your source of information for charging the system correctly. Refrigerant charge adjustment amount for adding or removing 0.6 oz/ft (17.74 g/m) of 3/8 liquid line above or below 15ft (4.57 m) respectively. Perform a final charge check only when in cooling and OD is between 65°F (18°C) and 100°F (38°C).

The use of a commercial charge metering device (restrictor) such as Imperial liquid low side charger model 535-C or Watsco ChargeFaster model CH200 is recommended when adding refrigerant to an operating system. This prevents potential damage of liquid slugging of the compressor and allows the subcooling to stabilize quicker.

Charging using the subcooling method optimizes charge volume and is preferred if possible. If the outdoor temperature is between 65°F - 100°F (18.3°C - 37.8°C) and indoor temperature is 70°F - 80°F (21.1°C - 26.7°C), the option to further adjust charge using "service valve subcool" will be available in the "charging mode selection" screen. If temperatures are outside of range, this option will be greyed out and not selectable. Inaccurate charging may result in nuisance fault codes.

Initial start-up can be performed using calculated charge only and once conditions are within range, the "Service Valve Subcool" option will become selectable.

Once start is selected the system will operate in a preset mode until "done" is selected. Wait for required stabilization time then check subcooling at service valve.

Adjust charge as required to meet target service valve subcooling shown on screen +0/-3 degrees for tolerance. If any adjustment is necessary, add or remove the charge slowly (no greater than .5 lb per minute) and allow system to operate for 25 minutes to stabilize, before declaring a properly charged system.

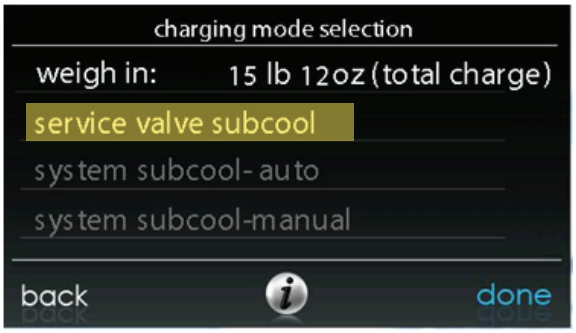

A14573

Fig. 16 - Adjusting Charge Using Service Valve Subcool

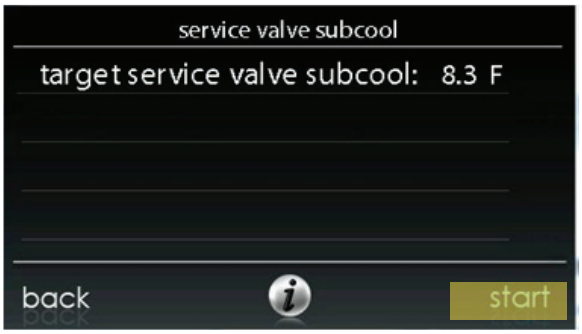

A14574

Fig. 17 - Service Valve Subcool Target Value

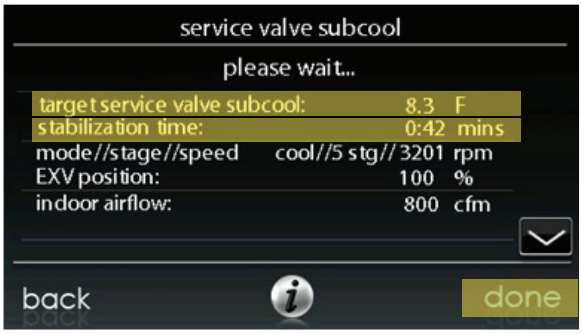

A14575

Fig. 18 - Stabilization Time

Charging Non-Communicating Systems

Charging Procedure: Force system to operate in high stage cooling by creating a large differential between room temperature and set point on thermostat. Use multi-meter to verify that 24 VAC is present between C, Y1 /Y2 terminals at outdoor unit.

Factory charge amount is shown on unit rating plate for high stage. Target subcooling chart is provided on back of control box door see Fig. 20 - 25 for example. To properly check or adjust charge, condition must be favorable for subcooling charging. Favorable conditions exists when outdoor temperature is between 65°F (18°C) and 100°F (38°C), and the indoor temperature is between 70°F (21°C) and 80°F (27°C). Follow the procedure below:

Unit is factory charged for 15ft (4.57 m) of lineset. Adjust charge by adding or removing 0.6 oz/ft (17.7 g/m) of 3/8 liquid line above or below 15ft (4.57 m) respectively.

For standard refrigerant line lengths (80ft/24.4 m or less), allow system to operate in cooling mode at least 25 minutes. If conditions are favorable, check system charge by subcooling method. If any adjustment is necessary, adjust charge slowly and allow system to operate for 25 minutes to stabilize before declaring a properly charged system.

If the indoor temperature is below 70°F (21.11°C), or the outdoor temperature is not in the favorable range, adjust charge for line set length above or below 15ft (4.57 m) and indoor fan coil /furnace coil per Table 4. Charge level should then be appropriate for the system to achieve rated capacity. The charge level should then be checked at another time when the both indoor and outdoor temperatures are in a more favorable range.

NOTE: If the line length is beyond 80ft (24.38 m) or greater than 20ft (6.10 m) vertical separation see Long line guideline for special charging requirement.

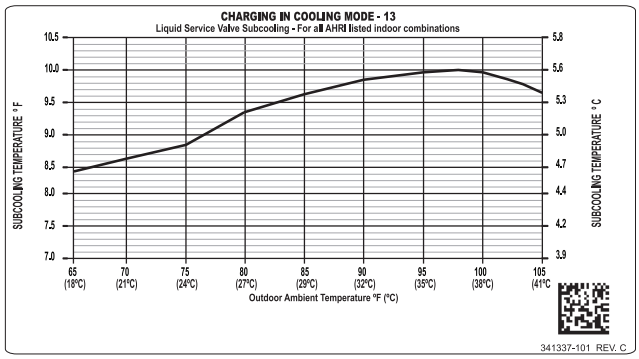

Fig. 19 - Charging in Cooling Mode 288BNV013

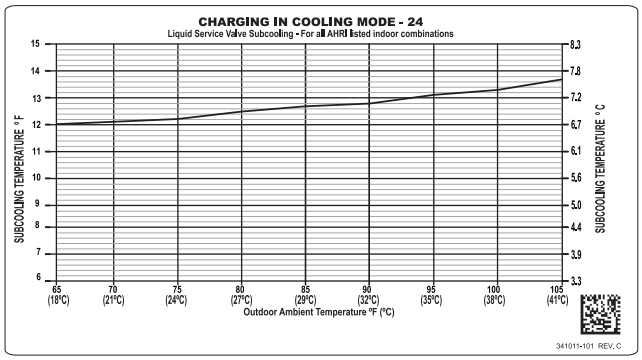

Fig. 20 - Charging in Cooling Mode 288BNV024

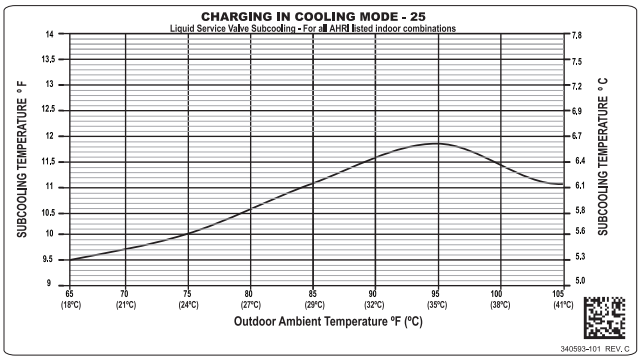

Fig. 21 - Charging in Cooling Mode 288BNV025

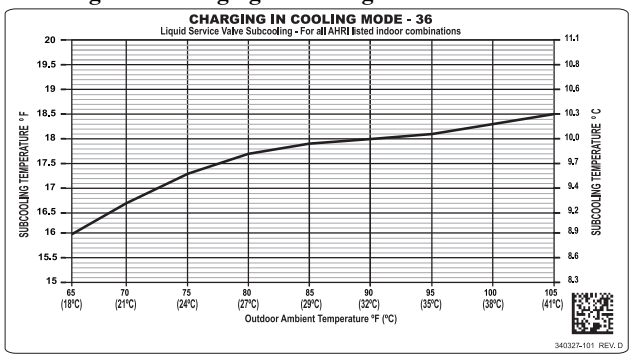

Fig. 22 - Charging in Cooling Mode 288BNV036

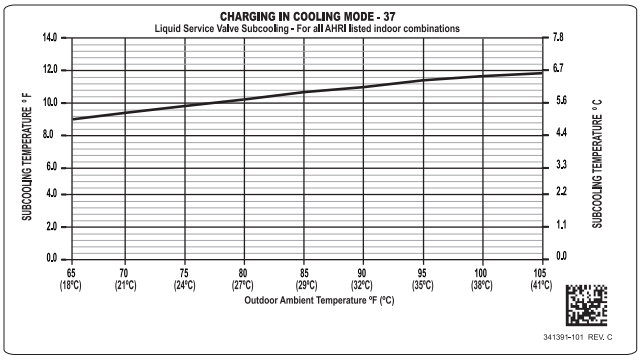

Fig. 23 - Charging in Cooling Mode 288BNV037

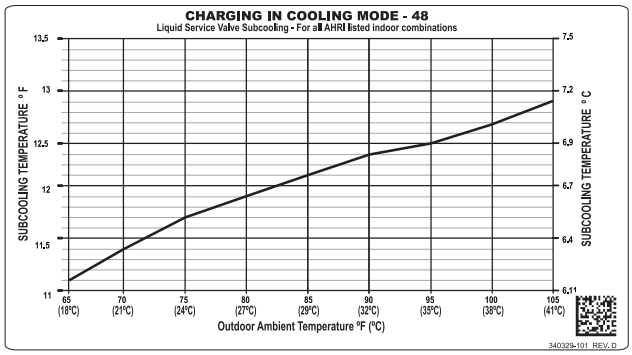

Fig. 24 - Charging in Cooling Mode 288BNV048

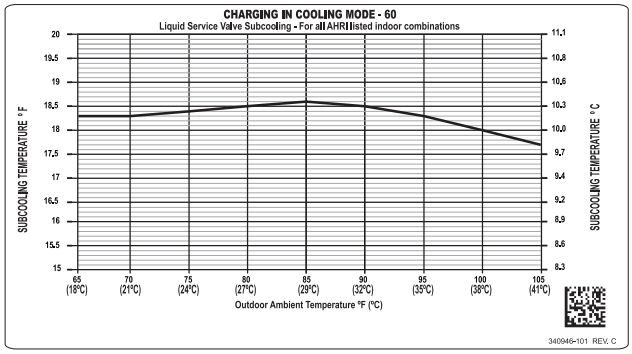

Fig. 25 - Charging in Cooling Mode 288BNV060

Heating Check Chart Procedure (See Fig.28 - 31) (Communicating / Non-communicating Systems)

In heating mode, the required charging method is by weigh-in. On new installations or complete recharge, refer to the unit 0 and indoor fan coil / furnace coil per Table 3 for additional charge needed. Refrigerant charge adjustment amount for adding or removing 0.6 oz/ft (17.74 g/m) of 3/8 liquid line above or below 15ft (4.57 m) respectively.

Use the Defrost CHECKOUT mode to remove ice or frost from coil, if present, prior to checking the heating pressures.

To use the Heating Check Chart, the user interface (UI) must be in Refrigerant Charging mode selected from the Installation and Service screen. The Charging Mode Selection screen will show selections for Weigh-In Charge Method or Heating Check Charge Method. Select Heating Check Charge Method. The Heating Check Charge method will only be displayed if the conditions are right for checking the charge in heating mode. When Heating Check Charge Method is selected, the system will operate by running in stage 5 with appropriate outdoor fan speed and indoor airflow. Upon completion of a countdown period for system stabilization, check refrigerant pressures for the appropriate ambient temperatures shown in Fig. 28, 29 or 31 based the OD unit size.

To use the Heating Check Chart in non-communicating systems, operate system at Y1+Y2–high stage. These charts indicate whether a correct relationship exists between system operating pressure and air temperature entering indoor and outdoor units. If pressure and temperature do not match on chart, system refrigerant charge may not be correct. **DO NOT USE CHART TO ADJUST REFRIGERANT CHARGE**.

NOTE: High pressure is at vapor service valve. Add 12 psig if high pressure is taken from liquid service valve.

NOTE: When charging is necessary during heating season, charge must be weighed in accordance with unit rating plate, ±0.6 oz./ft (±17.74 g/m). of 3/8-in. liquid-line above or below 15 ft (4.57 m), respectively.

Table 3 – Required Charge Adjustment for Indoor Coil Model

Furnace or Fan Coil Model Number	13	24B	25	36	37	48	60
CNPV*18**	–	/	/	/	/	/	/
CAP**18**	–	/	/	/	/	/	/
CNP**24	–	/	/	/	/	/	/
CNPV*19**	–	/	/	/	/	/	/
CAP**24	–	/	/	/	/	/	/
CSPH*24	–	/	/	/	/	/	/
CSPH*30**	/	/	/	/	/	/	/
F(E,V)4(A,B,C)NF002	+0.19	–	–	–	–	/	/
CAP**30	/	–	/	/	/	/	/
CNP**30	/	–	/	/	/	/	/
CNP**36	/	–	–	–	–	/	/
F(E,V)4(A,B,C)N(B,F)003	/	–	–	–	–	/	/
CAP**36	/	–	–	–	–	/	/
CNP**42	/	+.50	–	–	+.75	/	/
CAP**42	/	+.50	–	–	+.75	/	/
CSPH*36	/	/	–	–	+.75	/	/
CSPH*42**	/	/	+.75	+.75	+.75	/	/
CNP**31**	/	/	+.75	+.75	+.75	/	/
CNP**48	/	/	+.75	+.75	+.75	–	/
CSPH*48**	/	/	+.75	+.75	+1.00	–	/
CNP**37	/	/	/	/	/	/	/
CNP**43	/	/	/	/	/	/	/
CAP**48	/	/	/	+.75	+1.00	–	/
CNP**60	/	/	/	/	+1.00	–	–
CSPH*60	/	/	/	/	+1.00	–	–
F(E,V)4(A,B,C)N(B,F)005	/	/	+.75	+.75	+1.00	–	/
F(E,V)4(A,B,C)NB006	/	/	/	/	+1.00	+2.2	+1.00
CAP**60	/	/	/	/	/	+2.2	+1.00
CNP**61	/	/	/	/	/	/	/

/ = Comb. not allowed
– = No charge adjust for ID

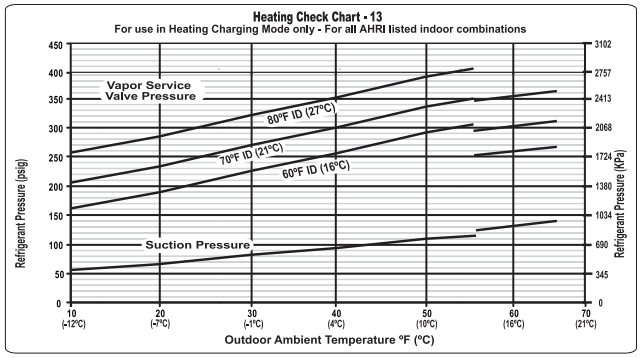

Fig. 26 - Heating Pressure Check Chart 288BNV013

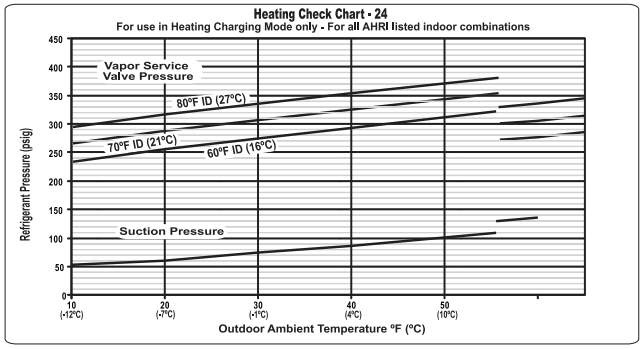

Fig. 27 - Heating Pressure Check Chart 288BNV024

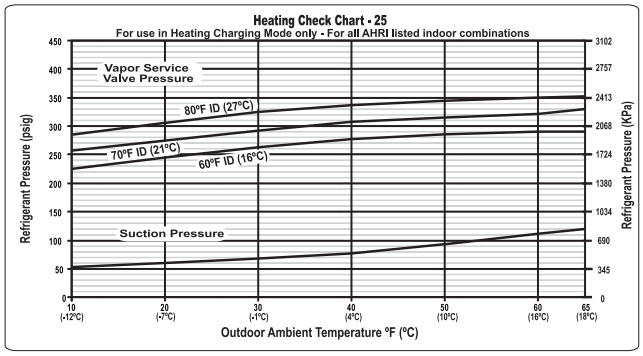

Fig. 28 - Heating Pressure Check Chart 288BNV025

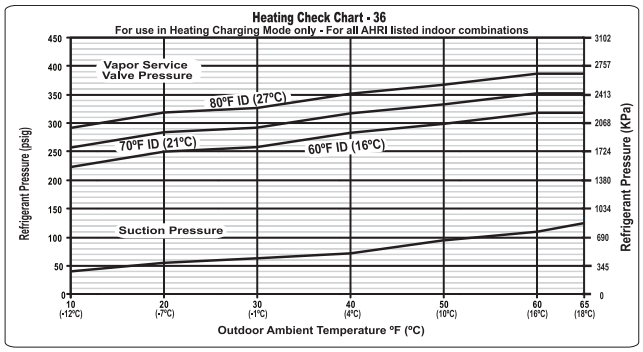

Fig. 29 - Heating Pressure Check Chart 288BNV036

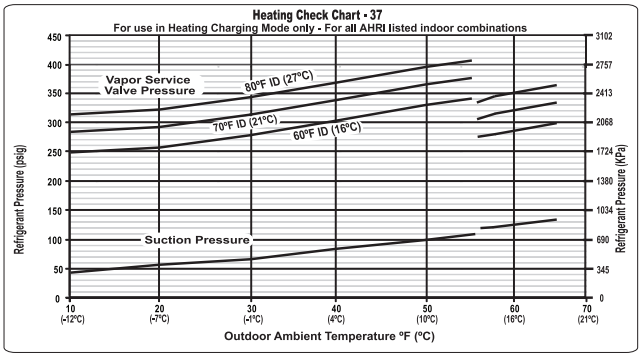

Fig. 30 - Heating Pressure Check Chart 288BNV037

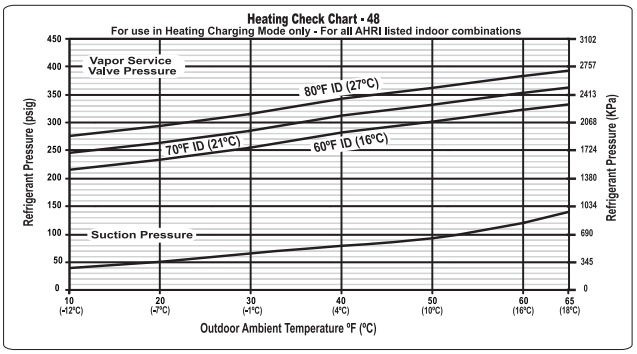

Fig. 31 - Heating Pressure Check Chart 288BNV048

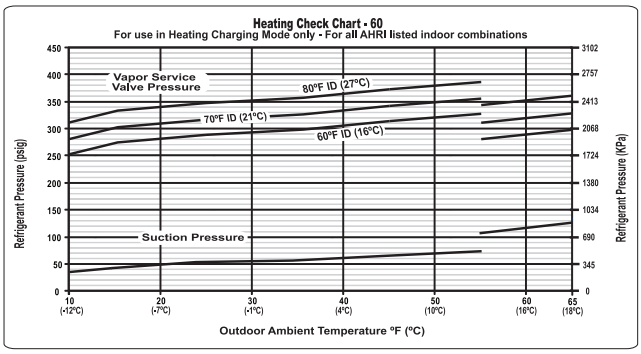

Fig. 32 - Heating Pressure Check Chart 288BNV060

Step 13 — Pumpdown & Evacuation

⚠ CAUTION

ENVIRONMENTAL HAZARD

Failure to follow this caution may result in environmental damage.

Federal regulations require that you do not vent refrigerant to the atmosphere. Recover during system repair or final unit disposal.

If this system requires either a Pump Down or Evacuation for any reason, the procedures below must be followed:

Pump Down - Evolution Communicating

Because this system is inverter controlled, compressor, suction pressure transducer and EXV, conventional procedure cannot be used to "pump down" and isolate the refrigerant into the outdoor unit. The UI (User Interface) has provisions to assist in performing this function.

1. Connect gauges to 288BNV liquid and vapor service valve ports to monitor operating pressures during and at completion of the procedure.
2. In the advanced menu of the UI, go to Checkout > Heat Pump> Pumpdown
3. Select mode to pump down in (COOL or HEAT), COOL mode allows refrigerant to be isolated in outdoor unit. HEAT mode allows the refrigerant to be isolated in indoor coil and lineset. Set desired time period. Default time period for the procedure is 120 minutes.
4. Select Start on UI to begin the pump-down process. Unit will begin running in selected mode after a brief delay.
5. Close the liquid service valve.
6. The unit will run in selected mode with the low pressure protection set to indicate pump-down is complete when the suction pressure drops below 10 psig. Compressor protections are still active to prevent damage to the compressor or inverter (high pressure, high current, high torque, etc.) .
7. Once system indicates pump-down complete or failure to complete shutdown, close vapor service valve.
8. A small quantity of charge will remain in isolated section of system dependent on ambient temperature and overall system charge. This charge must be manually recovered. A recovery system will be required to remove final quantity of refrigerant from indoor coil and line set.
9. Remove power from indoor and heat pump unit prior to servicing unit.

Pump Down – Using 2-stage HP Thermostat (Non-Communicating)

Because this system has an inverter controlled compressor, suction pressure transducer and EXV, conventional procedure cannot be used to "pump down" and isolate the refrigerant into the outdoor unit.

1. Connect gauges to 288BNV liquid and vapor service valve ports to monitor operating pressures during and at completion of the procedure.
2. Force system to operate in high stage by creating a large differential between room temperature and set point on thermostat. Use multi-meter to verify that 24 VAC is present between C and Y1 and Y2 terminals at outdoor unit.
3. Close the liquid service valve.
4. The unit will continue to run until high or low pressure switches open. Close vapor service valve once compressor shuts down.
5. Remove power from indoor and heat pump unit prior to servicing unit.
6. A quantity of charge will remain in isolated section of system dependent on ambient temperature and overall system charge. This charge must be manually recovered. A recovery system will be required to remove final quantity of refrigerant from indoor coil and line set.

Evacuation and recovery of refrigerant from 288BNV

Because this system has an EXV for the heating expansion device, additional steps may be taken to open the EXV for fastest refrigerant recovery and evacuation. If the EXV is not open when pulling a vacuum or recovering refrigerant from the heat pump unit, extended evacuation time may be required and/or inadequate vacuum obtained. The UI (User Interface) has provisions to open the EXV for refrigerant recovery and/or evacuation.

1. Connect gauges to 288BNV liquid and vapor service valve ports to monitor operating pressures during and at completion of the procedure. Attach recovery system or vacuum pump to gauge set as needed for the service procedure. The service valves must be open to evacuate the unit through the line set service ports. The suction capillary service port is a direct connection to the suction port of the compressor and may also be used.
2. In the advanced menu of the UI, go to Checkout > Heat Pump > Evacuation.
3. Set desired time period. Default time period for the procedure is 120 minutes.
4. Select START on UI to open the valve.
5. Begin evacuation or refrigerant recovery as required for the procedure after UI indicates the EXV is open. Power may be removed from heat pump after the UI indicates "READY TO EVACUATE."
6. Remove power from indoor and heat pump unit prior to servicing unit. The EXV will retain the open position.

NOTE: See service training materials for troubleshooting the EXV using EXV CHECK mode.

Evacuation and recovery of refrigerant from 288BNV when using non-communicating thermostat

Refrigerant recovery and evacuation can be performed without a UI (User Interface) but will take more time. If EXV is not forced open the recovery and evacuation must rely on check valve as a bypass.

1. Connect gauges to 288BNV liquid and vapor service valve ports to monitor operating pressures during and at completion of the procedure. Attach recovery system or vacuum pump to gauge set as needed for the service procedure. The service valves must be open to evacuate the unit through the line set service ports. The suction capillary service port is a direct connection to the suction port of the compressor and may also be used.
2. Begin evacuation or refrigerant. Allow extra time for refrigerant recovery and establishing a thorough evacuation.

MAJOR COMPONENTS

Variable speed Control Board

A13361

Fig. 33 - AOC (Application Operational Control) Board

The AOC board is located in the lower right hand side of inverter tray. It's functions include:

- Compressor speed control
- Outdoor fan motor control
- Reversing valve operation
- Defrost operation
- Crankcase heater operation
- Pressure switch monitoring
- Time Delays
- Pressure Transducer measurements
- PEV control (pressure equalizer valve)
- Temperature measurements
- EXV (Electronic Expansion Valve) operation control
- Inverter communication and control

Inverter

The inverter is located inside the control box. This is an air-cooled device that communicates with the control board and drives the compressor and fan motor to the demanded RPM. The inverter is always powered with line voltage since no contactor is used. The inverter changes the line voltage to DC volts and then recreates 3 phase sine waves that vary in frequency to drive the compressor and fan motor at the desired RPM.

NOTE: The unit may be operated with an Evolution Connex Control or a standard 2-stage HP thermostat. Evolution Connex Control will utilize 5 stages of heating and cooling, while 2-stage HP thermostat will only allow 2 discrete stages of heating and cooling operation.

Variable Speed Compressor

This unit contains a variable speed rotary compressor that has a wide operating range. It operates on a variable 3 phase sine wave provided by the inverter. This compressor can only be operated by the specific inverter supplied with the unit.

⚠ CAUTION

EQUIPMENT DAMAGE HAZARD

Failure to follow this caution may result in equipment damage and/or improper operation.

Do not attempt to apply line voltage directly to the compressor. This will destroy the compressor.

Electronic Expansion Valve (EXV)

This unit uses an electronic expansion valve for refrigerant metering in the heating mode. The control board drives the EXV to its proper position based on the operating mode and conditions. The Evolution Connex Control Service mode allows for manual opening and closing of the EXV for troubleshooting and pump down.

Field control Connections

For communicating operation use the communication Evolution plug only. Only two wires, AB (color), are required. If necessary, connect C for additional grounding (see Fig. 6). If using standard 2-stage HP thermostat, connect discrete inputs (R,C,Y2,Y1,O,W) for 2-stage control in heating and cooling modes.

Pressure Transducer (SPT)

A 5 VDC output low pressure transducer that provides a 0-5 VDC data for interpretation by the control board for a 0 to 200 psig range of pressure at the suction tube. This interpreted pressure data is then intelligently used by the AOC control board for low pressure cut-out, loss of charge management, compressor protection, oil circulation management, lubrication management and EXV control.

Pressure Equalizer Valve (PEV)

At the end of every compressor operation (after the 3.5 minute Time Guard period), the equalizer valve opens for 150 seconds plus an additional 15 seconds of protection before allowing the compressor to start ramping up.

The PEV is located next to the suction and discharge of the compressor. The function of this valve is to prevent the compressor from starting with a high refrigerant pressure differential, thus helping the reliability of the compressor.

NOTE: A hissing sound may be heard during the equalization process. This is normal.

TROUBLESHOOTING

Systems Communication Failure

If communication is lost with the User Interface (UI), the control will flash the appropriate fault code (see Table 7). Check the wiring to the User Interface and the indoor and outdoor units and power.

Model Plug

Each control board contains a model plug. The correct model plug must be installed for the system to operate properly (see Table 4).

The model plug is used to identify the type and size of unit to the control.

On new units, the model and serial numbers are inputted into the AOC board s memory at the factory. If a model plug is lost or missing at initial installation, the unit will operate according to the information input at the factory and the appropriate error code will flash temporarily. An RCD replacement AOC board contains no model and serial information. If the factory control board fails, the model plug must be transferred from the original board to the replacement board for the unit to operate.

When installing heat pump with older fan coils, a model plug change may be required. See table 2 for fan coils requiring model plug change.

NOTE: The model plug takes priority over factory model information input at the factory. If the model plug is removed after initial power up, the unit will operate according to the last valid model plug installed, and flash the appropriate fault code temporarily.

Table 4 – Factory Supplied Model Plug Information

288BNV	MODEL PLUG NUMBER	PIN RESISTANCE (K–ohms)	
		Pins 1–4	Pins 2–3
13	HK70EZ029	11K	220K
25	HK70EZ001	5.1K	11K
24B*	HK70EZ009	5.1K	91K
36	HK70EZ002	5.1K	18K
37	HK70EZ026	11K	120K
48	HK70EZ003	5.1K	24K
60	HK70EZ004	5.1K	33K

Service Tool

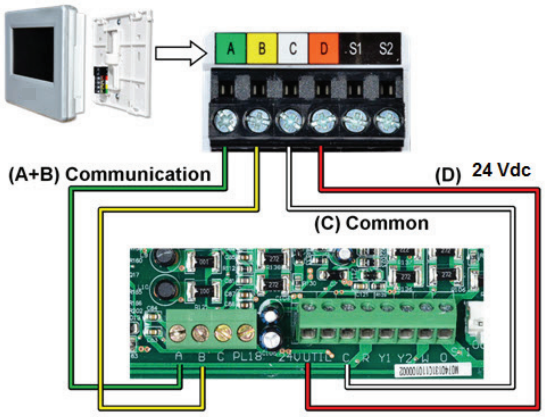

Fig. 34 - Service Tool Connection

When working on the outdoor unit of a split system, the technician would usually need to repeatedly walk between the indoor wall control and the unit outside. To save time, the communicating controls offer a service tool feature.

By wiring the service tool into the AOC board and powering it with an external adapter, the technician can have a wall control capable of running the system right at the outdoor unit.

To use a service tool, connect the A and B communication bus wires from this second communicating control to the terminals marked A and B on the terminal strip located in the bottom left corner of the AOC board (see Fig. 34). But instead of connecting the wires on the service tool to the terminals marked C and D, connect the C and D wires from the service tool to the 24V and C on ST1 as shown in Fig. 34.

When the service tool is connected and powered up, the communicating controls inside the home will "go to sleep" and let the service tool take control of the system. In this manner, the service technician can run the diagnostic checkouts right at the outdoor unit using the service tool.

After the checkouts are completed and it is no longer necessary to use the service tool, remove it from the communicating controls and the indoor communicating controls will regain control in about two minutes.

Pressure Switch Protection

The outdoor unit is equipped with high pressure switch. If the control senses the opening of a high pressure switch (open 600+/-5 psig, close 470+/-10 psig @77°F), it will respond as follows:

1. Display the appropriate fault code (see Table 7).
2. After a 15 minute delay, if there is a call for cooling or heating and HPS is reset, the PEV opens for 150 seconds to equalize system pressures. The compressor and fan will then ramp to the next lower stage of operation until demand is satisfied. In the next call for heating/cooling system will resume normal operation.
3. If the opened switch closes at any time after the 15 minute delay, then the PEV opens for 150 seconds to equalize system pressures. The compressor and fan will then ramp to the next lower stage of operation until demand is satisfied. In the next call for heating/cooling system will resume normal operation.
4. If HPS trips 3 consecutive cycles, the unit operation is locked out for 4 hours.
5. In the event of a high-pressure switch trip or high-pressure lockout, check the refrigerant charge, outdoor fan operation, and outdoor coil (in cooling) for airflow restrictions, or indoor airflow in heating.
6. In the event of a low-pressure trip or low-pressure lockout, check the refrigerant charge and indoor airflow (cooling) and outdoor fan operation and outdoor coil in heating.

Control Fault

If the outdoor unit control board has failed, the control will flash the appropriate fault code (see Table 7). The control board should be replaced.

Brown-Out Protection

If the line voltage is less than 187V for at least 4 seconds, the Compressor and OD fan goes to 0 rpm. Compressor and fan operation are not allowed until voltage is a minimum of 190V. The control will flash the appropriate fault code (see Table 7).

230V Line (Power Disconnect) Detection

The control board senses the presence of absence of 230V through inverter feedback. Voltage should present at all times when system is in service regardless if system is running or standby. If there is no 230V at the inverter when the indoor unit is powered with a cooling or heating demand, the appropriate fault code is displayed on UI (communicating only – see Table 7). If system is configured with conventional heat pump thermostat (non-communicating), no fault code will be displayed on AOC board, nor will any status LEDs be lit. Use multimeter to check for the presence of 230V in this situation.

Temperature Thermistors

Thermistors are electronic devices which sense temperature. As the temperature increases, the resistance decreases. 10Kohm thermistors are used to sense outdoor air temperature (OAT), coil temperature (OCT) and the suction line temperature (OST) located between the reversing valve and the accumulator. A 50Kohm thermistor is used to sense discharge temperature (ODT).

Refer to Table 5 and Fig. 35 and 36 for resistance values versus temperature.

Table 5 – 10K/50Kohm Resistance Values vs Temperature

10Kohm °C (°F)	
TEMPERATURE	**RESISTANCE (ohms)**
25.0 (77.0)	10.0 + / – 2.3%
0.0 (32.0)	32.6 + / – 3.2%
-28.0 (-18.4)	85.5 + / – 3.4%
50Kohm	
125.0 (257.0)	1.7 + / – 1.6%
75.0 (167.0)	7.40 + / – 2.0%
25.0 (77.0)	50.0 + / – 2.3%

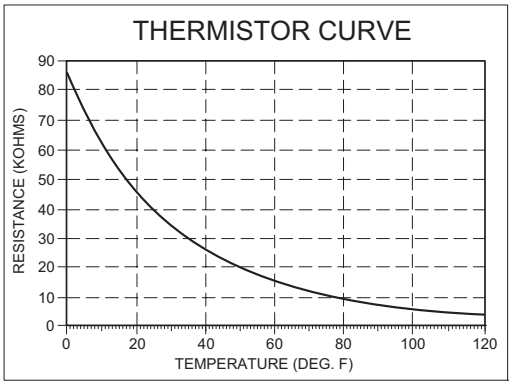

A91431

Fig. 35 - 10K Thermistor Resistance Versus Temperature

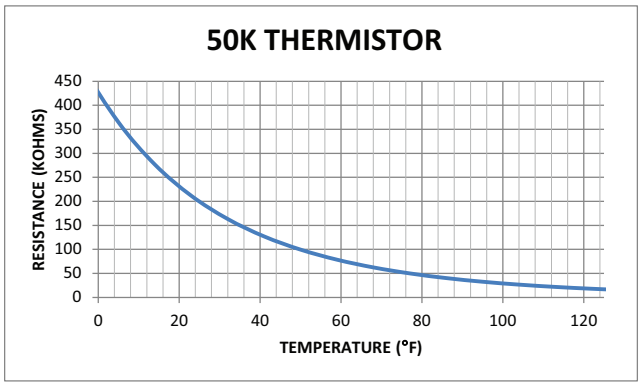

A14022

Fig. 36 - 50K Thermistor Resistance Versus Temperature

If the outdoor air or coil thermistor should fail, the control will flash the appropriate fault code (see Table 7).

IMPORTANT: The outdoor air thermistor, coil thermistor and suction thermistor should be factory mounted in the final locations. **Check to ensure thermistors are mounted properly (See Fig. 37, 38, 39 and 40).**

Thermistor Sensor Comparison

The control continuously monitors and compares the outdoor air temperature sensor and outdoor coil temperature sensor to ensure proper operating conditions. The comparison is:

- In cooling if the outdoor air sensor indicates ≥ 10°F (≥ 5.6°C) warmer than the coil sensor (or) the outdoor air sensor indicates ≥ 25°F (≥ 15°C) cooler than the coil sensor, the sensors are out of range.
- In heating if the outdoor air sensor indicates ≥ 35°F (≥ 19.4°C) warmer than the coil sensor (or) the outdoor air sensor indicates ≥ 10°F (≥ 5.6°C) cooler than the coil sensor, the sensors are out of range.

If the sensors are out of range, the control will flash the appropriate fault code as shown in Table 7.

The thermistor comparisons are not performed during low ambient cooling or defrost operation.

Failed Thermistor Default Operation

Factory defaults have been provided in the event of failure of outdoor air thermistor (OAT) and/or outdoor coil thermistor (OCT).

If the OAT sensor should fail, defrost will be initiated based on coil temperature and time.

If the OCT sensor should fail, defrost will occur at each time interval during heating operation, but will terminate after 2 minutes.

If there is a thermistor out-of-range error, defrost will occur at each time interval during heating operation, but will terminate after 2 minutes.

Count the number of short and long flashes to determine the appropriate flash code. Table 7 gives possible causes and actions related to each error.

Outdoor Coil Thermistor

The outdoor coil thermistor is a 10Kohm resistor used for multiple system operations. It provides the coil/liquid line temperature to the heat pump board and user interface. Low ambient operation, defrost initiation, defrost termination and assistance with OAT temperature measurement of some of the functions. The sensor must be securely mounted to the tube connecting the EXV and distributor. See Fig. 38 for proper placement. See Table 5 for proper resistances.

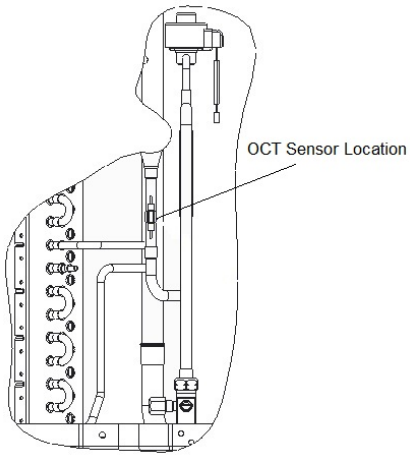

A14302

Fig. 37 - Outdoor Coil Thermistor (OCT) Attachment (On Distributor Tube)

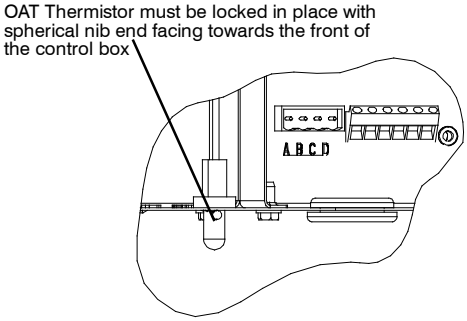

A11142

Fig. 38 - OAT Thermistor Location (Bottom of Control Box)

Suction Thermistor (OST)

Suction Thermistor is used for assisting in EXV control and must be secured on the suction tube and aligned longitudinally to the vertical surface of the tube axis (see Fig. 39).

⚠ CAUTION

UNIT DAMAGE HAZARD

Failure to follow this caution may result in equipment damage or improper operation.

In order to minimize the ambient influence, make sure the thermistor curved surface hugs the pipe surface and is secured tight using the wire tie fished through the original slot insulating polymer body.

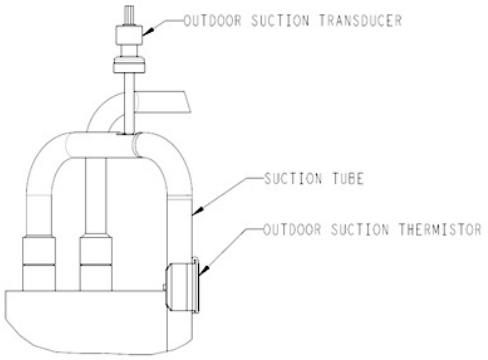

A14023

Fig. 39 - Suction Thermistor (OST) Attachment (On Suction Tube)

Discharge Thermistor (ODT)

Discharge Thermistor is used for protection against over temperature of the compressor. The ODT is located on the compressor discharge stub-out (see Fig. 40).

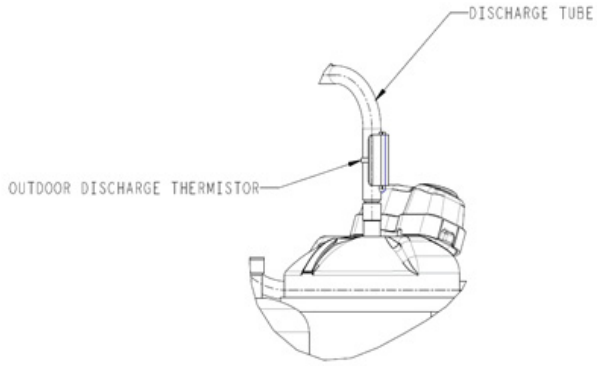

A14024

Fig. 40 - Discharge Thermistor (ODT)

Variable Speed Compressor Winding Resistance

This compressor operates with 3-phase variable frequency PWM variable voltage. For troubleshooting certain fault codes related to compressor resistances, follow these steps:

1. Disconnect compressor power leads from the inverter MOC terminals, U (YEL), V (RED), and W (BLK).
2. Measure the resistance between YEL to RED, YEL to BLK, and RED to BLK and compare to Table 6 values. Each resistance set should be equal.
3. Measure the resistance to ground for each lead.
4. If the resistances check out, reconnect power leads to appropriate terminal.
5. If the resistances appear to be abnormal, it will be necessary to measure the resistance at the compressor fusite terminals.
6. During the removal of the compressor fusite cap, do not remove the RTV sealant. Remove the harness plug, measure the resistances, and compare to Table 6.
7. Special care will need to be taken with the replacement of the compressor fusite cap. Make sure the two holes in the compressor fusite terminal box are still full of RTV sealant before the cap is reinstalled. The factory RTV can be reused as long as none of it has been removed during the cap removal.
8. Reinstall compressor sound blanket making sure discharge thermistor and compressor power harness are routed as they were from the factory

Table 6 – Variable Speed Compressor Resistance (winding resistance at 70°F ± 20°F)

WINDING	MODEL 288BNV				
	13, 24B	25	36	37, 48	60
Between terminals	1.13 OHM	.59 OHM	.59 OHM	.37 OHM	.24 OHM
Between terminal & ground	>1 mega OHM				

⚠ CAUTION

UNIT DAMAGE HAZARD

Failure to follow this caution may result in equipment damage and/or improper operation.

Do not use Meggar for measuring the winding resistance.

⚠ CAUTION

UNIT DAMAGE HAZARD

Failure to follow this caution may result in equipment damage and/or improper operation.

To maintain water integrity of the compressor fusite terminal box, the two holes in outer ring need to be full of RTV sealant.

Fan Motor

If verification of proper operation is required for the fan motor used in this unit, follow these steps:

1. Disconnect fan motor connector from control board.
2. Measure resistance between any 2 of the 3 leads present.
3. Compare measurement to values below

Fan Motor Resistance	
Unit Size	Resistance (Ohms)
13, 24B	21.2
25, 36, 37, 48, 60	11.1

Status Codes

⚠ ATTENTION

Unit may occasionally become unresponsive due to certain combinations of previous fault codes. There may not be anything wrong with the unit or components. The unit may require a high voltage power cycling for at least 2 minutes or longer to clear the condition. If the condition persists, conduct further troubleshooting per Service Manual.

Table 7 shows the status codes flashed by the amber status light. Most system problems can be diagnosed by reading the status code as flashed by the amber status light on the control board.

The codes are flashed by a series of short and long flashes of the status light. The short flashes indicate the first digit in the status code, followed by long flashes indicating the second digit of the error code.

The short flash is 0.25 seconds ON and the long flash is 1.0 second ON. Time between flashes is 0.25 seconds. Time between short flash and first long flash is 1.0 second. Time between code repeating is 2.5 seconds with LED OFF.

Codes are easily read from user interface (UI)

EXAMPLE:

3 short flashes followed by 2 long flashes indicates a 32 code. Table 7 shows this to be low pressure switch open.

Utility Interface With Evolution Connex Control

The utility curtailment relay should be wired between the two UTIL connections on the control board for this Evolution Communicating System (see Fig. 41). This input allows a power utility device to interrupt compressor operation during peak load periods. When the utility sends a signal to shut the system down, the User Interface status screen will display, "Curtailment Yes". See UI installation instructions for setup details.

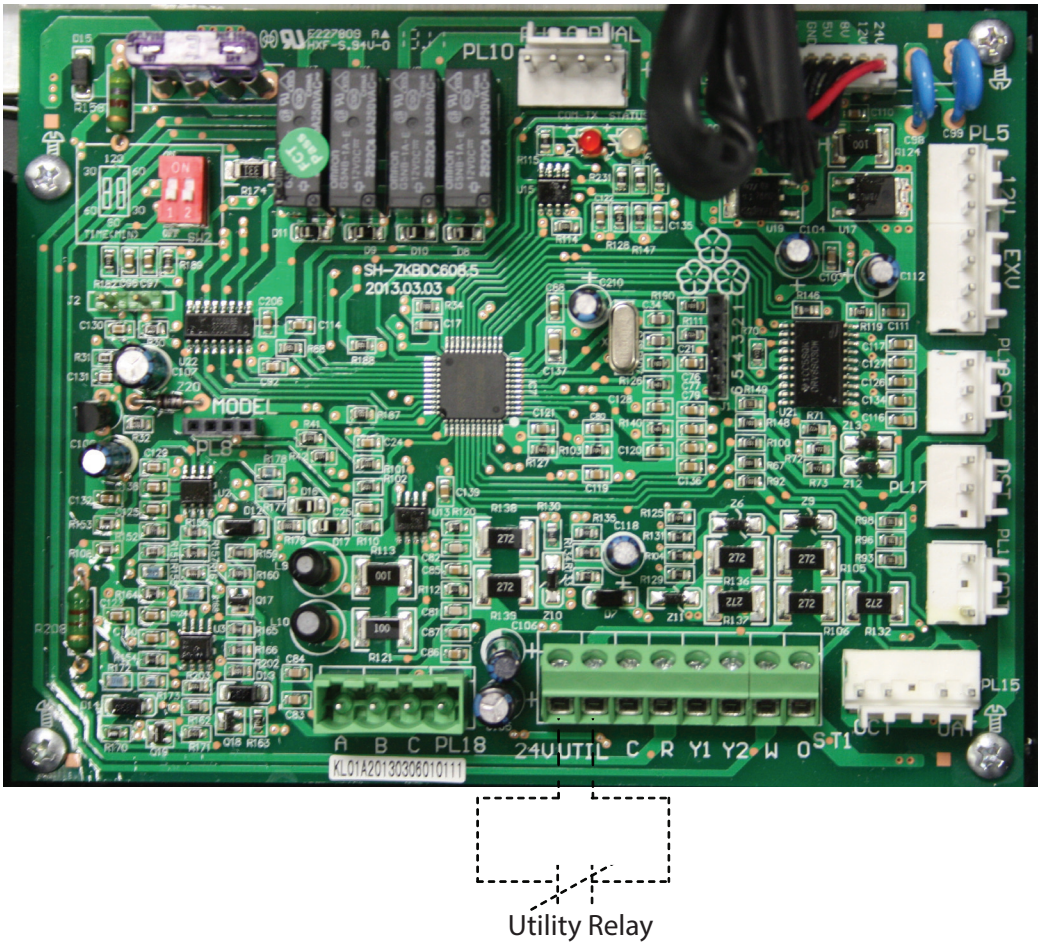

A13414

Fig. 41 - Variable Speed Control Board with optional Utility Relay

Table 7 – Troubleshooting

Flash Code	Type	Amber LED Description	Reset Time	Mode	Possible Causes	Actions
ON, no flash		Standby				
1, pause		Variable Capacity				
1, (2 sec ON), longer pause (1 second OFF)		Variable Capacity (Range Cutback)				
25	System Malfunction	INVALID MODEL PLUG/INVERTER SIZE	NA	Both	Wrong Model Plug Installed	Verify correct model plug installed
					Damaged Model Plug	Check model plug for corrosion or breakage; replace if necessary
					Missing model plug on service board	Re–install original model plug
					Damaged AOC control	Replace AOC control
					Incorrect Model Plug with Inverter Size	Replace plug or inverter with correct size (If model plug is for 2 Ton but Inverter is 3 Ton, fault code 25 will be shown)
31	Local	HIGH PRESSURE SWITCH OPEN (stage/speed down for each occurrence, elevates to fault code 84 when it occurs while running on the lowest stage)	6 Minutes (then reduced stage operation)	Both	High Pressure Event	System will self–mitigate by reducing the stage, persistent conditions will lead to lockout (refer to Error Code 84). 2 hours of accumulated operation without further fault will reset fault reduced stage operation.
32	Local	LOW PRESSURE TRIP (elevates to fault code 83 after 3 occurrences)	6 Minutes	Both	Low Pressure Event	System will self–mitigate, persistent conditions will lead to lockout (refer to Error Code 83) 2 hours of accumulated operation without further fault will reset fault counter
33	Local	LOST INVERTER COMMUNICATIONS (Occurs after 2 minutes of no communications between AOC and MOC) (Elevates to fault code 48 after 3 consecutive failures within 20 minute or 20 minutes continuous loss of connection)	6 Minutes	Both	Loose or disconnected harness (Hardness between AOC (PL20) and MOC)	Verify good harness connection
					Radio or Electrical noise	System will try to self–mitigate with repeated start attempts
					Possible damage to inverter	change out the Inverter drive
46	Local	BROWNOUT EVENT	6 Minutes	Both	low line voltages	if persistent contact power provider
48	System Malfunction	LOST INVERTER COMMUNICATIONS (Elevated from fault code 33 after 3 occurrences)	6 Minutes	Both	Loose or disconnected harness (Hardness between AOC (PL20) and MOC)	Verify good harness connection
					Radio or Electrical noise	System will try to self–mitigate with repeated start attempts
					Possible damage to inverter	change out the Inverter drive
49	Local	COMPRESSOR OVER CURRENT FAULT (Elevates to fault code 95 after 3 occurrences)	6 Minutes	Both	Refer to fault code 95	Refer to fault code 95
53	Fault	OUTDOOR AIR TEMP SENSOR FAULT	NA	Both	Sensor Harness not connected to AOC control	Ensure plug is connected to AOC control
					Broken or loose harness wire	Check harness for continuity; see resistance chart to check resistance at given temperature
					Broken or Damaged Sensor	Check harness for continuity; see resistance chart to check resistance at given temperature
					Hardware damage to AOC control	Replace AOC control
54	Fault	SUCTION TEMP SENSOR FAULT	NA	Both	Sensor Harness not connected to AOC control	Ensure plug is connected to AOC control
					Broken or loose harness wire	Check harness for continuity; see resistance chart to check resistance at given temperature
					Suction Thermistor not properly attached or in wrong location	Ensure Sensor is properly attached to the accumulator entry–tube
					Broken or Damaged Sensor	Check harness for continuity; see resistance chart to check resistance at given temperature
					Hardware damage to AOC control	Replace AOC control

Flash Code	Type	Amber LED Description	Reset Time	Mode	Possible Causes	Actions
55	Fault	COIL TEMP SENSOR FAULT	NA	Both	Sensor Harness not connected to AOC control	Ensure plug is connected to AOC control
					Broken or loose harness wire	Check harness for continuity; see resistance chart to check resistance at given temperature
					Coil Thermistor not properly attached or in wrong location	Ensure Sensor is properly clipped to the distributor entry–tube
					Broken or Damaged Sensor	Check harness for continuity; see resistance chart to check resistance at given temperature
					Hardware damage to AOC control	Replace AOC control
56	Local	OAT–OCT THERMISTOR OUT OF RANGE	NA	Both	Coil Thermistor not properly attached or in wrong location	Ensure Sensor is properly clipped to the distributor entry–tube
					Outdoor Ambient Temperature sensor improperly installed (sensor body may be in contact with sheet metal)	Properly install OAT sensor
				Cool	Heating when cooling is demanded	Check fuse on AOC control
						Check wiring between AOC and reversing valve
						troubleshoot reversing valve
						Inspect outdoor coil for obstructions
57	Fault	SUCTION PRESSURE SENSOR FAULT	NA	Both	Sensor Harness not connected to AOC control	Ensure plug is connected to AOC control
					Broken or loose harness wire	Check harness
					Electrical short destroyed Transducer electronics	Compare transducer reading to gauge reading at service valve (see transducer measurement chart); Check system for electrical shorts and correct; replace transducer
					Heat damage during brazing	Compare transducer reading to gauge reading at service valve (see transducer measurement chart); replace transducer
59	Local	DISCHARGE TEMP OUT OF RANGE EVENT (elevates to fault code 74 after 3 occurrences)	6 Minutes	Both	See fault 74	Same actions for 74
61	Local	FAN INVERTER FAULT (elevates to fault code 76 after 5 occurrences)	6 Minutes	Both	OFM failed to start	Troubleshoot outdoor fan motor & blade and make sure they are working
					Fan motor misalignment	System will attempt to run again
					See Fault 76	Same actions for 76
62	Local	FAN INVERTER TEMP HIGH (elevates to fault code 85 after 3 occurrences)	NA	Both	See fault 85	Same actions for 85
63	Local	FAN INVERTER CURRENT FAULT (elevates to fault code 86 after 3 occurrences)	6 Minutes	Both	See fault 86	Same actions for 86
65	Local	DC VOLTS LOW – SPEED LIMITING	NA	Both	Low supply line voltage (< 197 VAC)	Check supply voltage to ODU; if low contact utility provider
					Loose wire in control box area	Loose wire: check for loose wire in ODU
					Inverter internal damage	Replace Inverter
66	Local	OUTDOOR FAN DROPPED OUT	6 Minutes	Both	MOC is reporting that OFM isn't running	Troubleshoot outdoor fan motor and make sure it is working
67	Local	STATOR HEATER FAULT	6 Minutes	Both	There is a demand for stator heat but MOC doesn't detect it	Check compressor winding resistance or miswire of compressor leads at terminals U,V,W
68	Event	10 MIN STAGE 2 WARMUP DELAY	10 Minutes	Both	High voltage power cycle	No action
69	System Malfunction	INVERTER/COMPRESSOR INTERNAL FAULT	15 Minutes	Both	Phase imbalance/ compressor or inverter miswire	Check compressor winding resistance or miswire of compressor leads at terminals U,V,W
					Flooded start	Troubleshoot EXV & TXV
					Incorrect refrigerant charge	Check refrigerant amount
					Inverter damage	Replace inverter
					Compressor damage	Replace compressor

Flash Code	Type	Amber LED Description	Reset Time	Mode	Possible Causes	Actions
71	Local	COMPRESSOR DROPPED OUT	6 Minutes	Both	MOC is reporting that compressor isn't running	Check compressor winding resistance or miswire of compressor leads at terminals U,V,W
72	Local	SUCTION OVER TEMPERATURE EVENT (elevates to fault code 82 after 3 occurrences)	15 Minutes	Both	See fault 82	Same actions for 82
74	System Malfunction	DISCHARGE TEMP OUT OF RANGE LOCKOUT (Elevated from fault code 59 after 3 occurrences)	2 Hours	Both	Sensor Harness not connected to AOC control	Ensure plug is connected to AOC control
					Broken or loose harness wire	Check harness for continuity; see resistance chart to check resistance at given temperature
					Broken or Damaged Sensor	Check harness for continuity; see resistance chart to check resistance at given temperature
					Hardware damage to AOC control	Replace AOC control
					Indoor Unit Airflow too low or off	Troubleshoot indoor fan motor and make sure it is working
					Outdoor Unit Airflow too low or off	Troubleshoot outdoor fan motor and make sure it is working
					Reversing Valve Bypass or Reversing Valve not energized	Reversing Valve stuck halfway Ensure AOC fuse is good 24 VDC in cooling mode Check harness and connectors
				Cool	High Load conditions	Over charge: Check system charge
				Heat	Low Charge or Loss of Charge at low ambient heating conditions	Undercharged or No charge: check charge
				Heat	Expansion Device Restriction	Heating: Trouble shoot EXV (coil, harnesses); Trouble shoot the TXV Power Cycle system, is EXV moving on power up (audible)
75	Local	MAXIMUM POWER MODE – TEMP (Temporary RPM reduction or stage lowering will result.)	NA	Both	Outdoor Airflow too low or off	Check ODU coil for clogging (ice or debris) and clean if necessary; Troubleshoot ODU fan motor and make sure it is working
					Blocked Inverter Heat Exchanger (fins)	Check Inverter fins for debris and clean if necessary
					Application violates guideline	Consult Application Guideline for compliance
76	System Malfunction	FAN INVERTER LOCKOUT (Elevated from fault code 61 after 5 occurrences)	2 Hours	Both	Fan blade bent/out of balance	Check outdoor fan blade Check for ice build up
					Fan blade restricted	Check outdoor fan blade clearance Check for ice build up
					Fan motor wiring	Check outdoor fan motor connectors and harness
					Fan motor	Replace outdoor fan motor
					Inverter damage	Replace inverter
77	Local	MAXIMUM POWER MODE – COMP CURRENT (Temporary RPM reduction or stage lowering will result.	NA	Both	Compressor is operating outside the allowed operational envelope	Inverter will reduce speed to a lower stage
					Incorrect refrigerant charge	Check refrigerant amount
					Outdoor Airflow too low or off	Check ODU coil for clogging (ice or debris) and clean if necessary; Troubleshoot ODU fan motor and make sure it is working
					Incoming power supply voltage	Check voltage versus unit rating plate for allowable range
					Loose or incorrect wire connections	Check incoming power leads and leads to the compressor plug
79	Local	COMPRESSOR/INVERTER FAULT (Elevates to fault code 88 after 3 occurrences)	6 Minutes	Both	Compressor fails to start	System will try to self–mitigate with repeated start attempts

Flash Code	Type	Amber LED Description	Reset Time	Mode	Possible Causes	Actions
82	System Malfunction	SUCTION OVER TEMP LOCKOUT (Elevated from fault code 72 after 3 occurrences)	4 Hours	Both	Incorrect refrigerant charge	Check refrigerant amount
				Cool	Uninsulated vapor line	Insulate the vapor line
				Cool	Indoor TXV operation	Troubleshoot TXV
				Heat	Outdoor EXV operation	Troubleshoot EXV
				Both	Reversing valve bypass	troubleshoot reversing valve
83	System Malfunction	LOW PRESSURE LOCKOUT FOR 4 HOURS (Elevated from fault code 32 after 3 occurrences)	4 Hours	Cool	Cooling in Low Ambient region (55 °F and below) with "Low Ambient Cooling Control" disabled	Enable "Low Ambient Cooling" via user interface
				Cool	Outside Normal Operating Range (e.g. improper load calculation, system match issue, outside cooling range etc.)	Consult Application Guidelines
				Cool	Service Valve left closed (Liquid or Vapor)	Ensure Service Valves are open
				Cool	Undercharged System	Check system subcooling to determine charge status, if low add charge using Charging Mode (follow proper charging procedures)
				Cool	Indoor Airflow too low or off	Check Indoor for clogging (ice or debris) and clean or de–ice if necessary; Troubleshoot Indoor fan motor and make sure it is working; follow Indoor Airflow troubleshooting instruction
				Cool	Restriction in Filter Drier plus Long Line Application and filter drier on Indoor Unit	Clean System (refer to application guideline) and replace filter drier
				Cool	Restriction due to debris	Clean System (refer to application guideline) and replace filter drier
				Cool	Restriction in Circuits or Tubing	Check kinks and straighten or replace circuits
				Heat		Troubleshoot EXV (see guide below)
				Heat	Outside Normal Operating Range (e.g. improper load calculation, system match issue, outside heating range etc.)	Consult Application Guidelines
				Heat	Service Valve left closed (Liquid Service Valve)	Ensure Liquid Service Valve is open
				Heat	Outdoor Airflow too low or off	Check Outdoor for clogging (ice or debris) and clean or de–ice if necessary; Troubleshoot Outdoor fan motor and make sure it is working; follow Outdoor Airflow troubleshooting instruction
				Heat	Undercharged System	Check charge in cooling (if in Cooling Charge Mode Ambient Range), if low add charge using Charging Mode (follow proper charging procedures); if outside cooling charge mode range, pull out charge, weigh in using heating charge mode
				Heat	Restriction due to debris	Clean System (refer to application guideline) and replace filter drier
				Both	Restriction in Filter Drier plus filter drier on Outdoor Unit	Clean System (refer to application guideline) and replace filter drier
				Both	Expansion Device Restriction	If short lineset (less than 15 ft.) Troubleshoot TXV (see guide below); replace if necessary

Flash Code	Type	Amber LED Description	Reset Time	Mode	Possible Causes	Actions
84	System Malfunction	HIGH PRESSURE LOCK-OUT FOR 4 HOURS (Elevated from fault code 31 when the stage (speed) can no longer be lowered)	4 Hours	Both	Outside Normal Operating Range (e.g. improper load calculation, system match issue, outside cooling range, outside heating range etc.)	Consult Application Guidelines
				Both	Service Valve left closed (Liquid or Vapor)	Ensure Service Valves are open
				Both	Loose High Pressure Switch harness leads	Check HPS harness
				Both	Pressure Switch disconnected from ODU Control Board	Check HPS connection on ODU control
				Cool	Outdoor Airflow too low or off	Check Outdoor Coil for clogging (ice or debris) and clean or de−ice if necessary; Troubleshoot Outdoor fan motor and make sure it is working; follow Outdoor Airflow troubleshooting instruction
				Cool	Overcharged System	Check system charge using Cooling Charging Mode (follow proper charging procedures)
				Heat	Indoor Airflow too low or off	Check Indoor for clogging (ice or debris) and clean or de−ice if necessary; Troubleshoot Indoor fan motor and make sure it is working; follow Indoor Airflow troubleshooting instruction
				Both	Restriction due to debris leading to Overcharge when charging	Clean System (refer to application guideline) and replace filter drier
				Both	Restriction in EXV plus Long Line Application leading to Overcharge when charging in Cooling mode	If long line, troubleshoot EXV
				Both	Non−condensable leading to high load	Clean System (refer to application guideline) and replace filter drier
				Cool	Restriction in Filter Drier plus Long Line Application and filter drier on Outdoor Unit	Clean System (refer to application guideline) and replace filter drier
				Cool	Restriction in EXV plus Overcharge	troubleshoot EXV
				Cool	Restriction in Circuits or Tubing	Check kinks and straighten or replace circuits
				Both	Faulty Pressure Switch	Check Discharge pressure with gauge, if less than 610 +/− 20 psig and switch is open (measure resistance) then replace pressure switch
				Heat	Electric Heater plus Heat pump application: Electric Heater stuck on	If User Interface is not requesting Electric Heat check for heater relays, if on troubleshoot Electric Heater
				Heat	Furnace plus Heat pump application: Furnace stuck on	If not in Defrost and Furnace is running same time as heat pump, troubleshoot Furnace
				Heat	Restriction in Filter Drier plus Long Line Application and filter drier on Indoor Unit	Clean System (refer to application guideline) and replace filter drier
				Both	Expansion Device Restriction	Troubleshoot TXV Troubleshoot EXV
				Heat	Overcharged System	Check charge in cooling (if in Cooling Charge Mode Ambient Range), if low add charge using Charging Mode (follow proper charging procedures); if out side cooling charge mode range, pull out charge, weigh in using heating charge mode
				Heat	Reversing Valve Stuck in Cooling	troubleshoot reversing valve
85	System Malfunction	FAN INVERTER TEMP LOCKOUT (Elevated from fault code 62 after 3 occurrences)	15 minutes	Both	Unusual loading of the fan	Troubleshoot outdoor fan motor & blade and make sure they are working Check for fan outlet blockage due to snow/ice etc.
					Improper airflow across inverter heat sink	Inspect outdoor coil for obstructions
				Both	Inverter damage	Replace inverter

Flash Code	Type	Amber LED Description	Reset Time	Mode	Possible Causes	Actions
86	System Malfunction	FAN INVERTER CURRENT LOCKOUT (Elevated from fault code 63 after 3 occurrences)	5 minutes	Both	Sudden supply voltage change	Investigate incoming voltage
					Sudden load change on fan/motor	Troubleshoot outdoor fan motor & blade and make sure they are working. Check harness and connectors
					Inverter damage	Replace inverter
88	System Malfunction	COMPRESSOR / INVERTER LOCKOUT (Elevated from fault code 79 after 3 occurrences)	2 Hours	Both	Blocked Inverter Heat Exchanger (fins)	Check Inverter fins for debris and clean if necessary
					Condenser Airflow too low or off	Check Condenser (IDU in heating, ODU in cooling) for clogging (ice or debris) and clean if necessary; Troubleshoot Condenser fan motor and make sure it is working
					Evaporator Airflow too low or off	Check Evaporator (IDU in cooling, ODU in heating) for clogging (ice or debris) and clean if necessary; Troubleshoot Evaporator fan motor and make sure it is working
					High Load conditions at cold ambient heating or high ambient cooling	Over charge: Check system charge
					Inverter damage	Replace inverter
91	Local	INVERTER VDC–OUT OVER VOLTAGE EVENT	5 Minutes	Both	Occurs when bus voltage exceeds 410 VDC	Check operation of compressor
					Compressor is suddenly unloaded	Check that the service valves are fully open
					Inverter damage	Replace inverter
92	Local	INVERTER VDC–OUT UNDER VOLTAGE EVENT	5 Minutes	Both	Occurs when bus voltage falls below 220 VDC	Check for interruption in main power supply
93	Local	230VAC UNDER VOLTAGE EVENT (elevates to fault code 96 after 3 occurrences)	5 Minutes	Both	Occurs when incoming voltage is less than 197 VAC	System will try to ride through voltage spikes (possibly caused by weather event) and self–recover in trip condition; persistent over voltage rips will lead to fault 96
94	Local	230VAC OVER VOLTAGE EVENT (elevates to fault code 97 after 5 occurrences)	5 Minutes	Both	Occurs when incoming voltage is more than 253 VAC	System will try to ride through voltage spikes (possibly caused by weather event) and self–recover in trip condition; persistent over voltage trips will lead to fault 97
95	System Malfunction	COMPRESSOR OVER CURRENT LOCKOUT (Elevated from fault code 49 after 3 occurrences)	2 Hours	Both	High superheat	Troubleshoot TXV
						Troubleshoot EXV
						Check suction pressure transducer and suction temperature sensor
				Both	Compressor is operating outside the allowed operational envelope	Inverter will reduce speed to a lower stage
				Both	Incoming power supply voltage	Check voltage versus unit rating plate for allowable range
					Loose or incorrect wire connections	Check incoming power leads and leads to the compressor plug
					Phase imbalance	Check compressor winding resistance or miswire of compressor leads at terminals U,V,W
					Outdoor Airflow too low or off	Check ODU coil for clogging (ice or debris) and clean if necessary; Troubleshoot ODU fan motor and make sure it is working
					Refrigerant overcharge	Check refrigerant amount
					Inverter damage	Replace inverter
					Compressor internal damage	Replace compressor
96	System Malfunction	VDC UNDER VOLTAGE LOCKOUT (Elevated from fault code 93 after 3 occurrences)	2 Hours	Both	Low supply line voltage (< 197 VAC)	Check supply voltage to ODU; if low contact utility provider
					Loose wire in control box area	Loose wire: check for loose wire in ODU
					Inverter internal damage	Replace Inverter
97	System Malfunction	VDC OVER VOLTAGE LOCKOUT (Elevated from fault code 94 after 3 occurrences)	2 Hours	Both	High supply line voltage (> 253 VAC)	Check supply voltage to ODU; if high contact utility provider
					Inverter internal damage	Replace Inverter
98	Local	HIGH TORQUE EVENT (Event will cause stage down and when stage is at lowest level, will elevate to fault code 99)	NA	Both	Compressor is operating outside the allowed operational envelope	Inverter will reduce speed to a lower stage

Flash Code	Type	Amber LED Description	Reset Time	Mode	Possible Causes	Actions
98	Local	HIGH TORQUE EVENT (Event will cause stage down and when stage is at lowest level, will elevate to fault code 99)	NA	Both	Refer to 99	Refer to 99
99	System Malfunction	HIGH TORQUE LOCKOUT (Elevated from fault code 98 when 98 occurs at lowest stage)	2 hours	Both	Miswire	Check miswire of compressor leads at terminals U,V,W
				Both	Refrigerant overcharge	Check refrigerant amount
				Both	Outdoor Airflow too low or off	Check ODU coil for clogging (ice or debris) and clean if necessary; Troubleshoot ODU fan motor and make sure it is working
				Both	Expansion Device Restriction	Troubleshoot TXV
						Troubleshoot EXV

FINAL CHECKS

IMPORTANT: Before leaving job, be sure to do the following:

1. Ensure that all wiring is routed away from tubing and sheet metal edges to prevent rub-through or wire pinching.
2. Ensure that all wiring and tubing is secure in unit before adding panels and covers. Securely fasten all panels and covers.
3. Tighten service valve stem caps to 1/12-turn past finger tight.
4. Leave User's Manual with owner. Explain system operation and periodic maintenance requirements outlined in manual.
5. Fill out Dealer Installation Checklist and place in customer file.

CARE AND MAINTENANCE

For continuing high performance and to minimize possible equipment failure, periodic maintenance must be performed on this equipment.

Frequency of maintenance may vary depending upon geographic areas, such as coastal applications. See Owner's Manual for information.

PURON® (R-410A) REFRIGERANT QUICK REFERENCE GUIDE

- Puron refrigerant operates at 50-70 percent higher pressures than R-22. Be sure that servicing equipment and replacement components are designed to operate with Puron refrigerant.
- Puron refrigerant cylinders are rose colored.
- Recovery cylinder service pressure rating must be 400 psig, DOT 4BA400 or DOT BW400.
- Puron refrigerant systems should be charged with liquid refrigerant. Use a commercial type metering device in the manifold hose when charging into suction line with compressor operating.
- Manifold sets should be 700 psig high side and 180 psig low side with 550 psig low-side retard.
- Use hoses with 700 psig service pressure rating.
- Leak detectors should be designed to detect HFC refrigerant.
- Puron refrigerant, as with other HFCs, is only compatible with POE oils.
- Vacuum pumps will not remove moisture from oil.
- Do not use liquid-line filter driers with rated working pressures less than 600 psig.
- Do not leave Puron refrigerant suction line filter driers in line longer than 72 hours.
- Do not install a suction-line filter drier in liquid-line.
- POE oils absorb moisture rapidly. Do not expose oil to atmosphere.
- POE oils may cause damage to certain plastics and roofing materials.
- Wrap all filter driers and service valves with wet cloth when brazing.
- A factory-approved liquid-line filter drier is required on every unit.
- Do NOT use an R-22 TXV.
- If indoor unit is equipped with an R-22 TXV or piston metering device, it must be changed to a hard-shutoff Puron refrigerant TXV.
- Never open system to atmosphere while it is under a vacuum.
- When system must be opened for service, recover refrigerant, evacuate then break vacuum with dry nitrogen and replace filter driers. Evacuate to 500 microns prior to recharging.
- Do not vent Puron refrigerant into the atmosphere.
- Do not use capillary tube coils.
- Observe all **warnings**, **cautions**, and **bold** text.
- All indoor coils must be installed with a hard-shutoff Puron refrigerant TXV metering device.

©2016 Bryant Heating & Cooling Systems ● 7310 W. Morris St. ● Indianapolis, IN 46231
Edition Date: 01/16

Catalog No. II288B–06

Manufacturer reserves the right to discontinue, or change at any time, specifications or designs without notice and without incurring obligations.

Replaces: II288B–05