EVM5X / W5VM Series B

Multipoise Cased Evaporator Coil for R-454B Refrigerant (no separate Dissipation Control; Sensor only)

***Refer to AHRI Directory for Approved Rated Combinations.**

Installation Instructions

IMPORTANT: This unit is to be used with R-454B refrigerant only. This system includes an internal Gen 2 sensor to detect any refrigerant leaks and must be connected to the factory-approved furnace control or compatible Gen 2 dissipation control accessory kit. This is only compatible with outdoor condensers that are R-454B certified. If you are installing a gas furnace model that does not support factory-approved integrated dissipation, a Dissipation Accessory Kit is required. Refer to the furnace product data sheet to determine if integrated dissipation is supported on that model. See the evaporator coil product data sheet for applicable factory-approved accessory kits.

NOTE: Read the entire instruction manual before starting the installation.

Table of Contents

Safety Considerations 1
Introduction. 2
Installation 2
Inspect Equipment 2
Table 1 – Coil Connections / Orientations. 3
Airflow. 3
TXV 3
Cabinet Sweating 3
Select Installation Procedure 3
Upflow Coil Installation. 4
Downflow Coil Installation 5
Horizontal Coil Installation 5
Refrigerant Line Connections 7
Connect Refrigerant, Liquid, and Suction Lines 7
Waste Line Connection 9
Humidifier Application 9
Electrical Connections 10
Leak Dissipation System 10
Troubleshooting 11
A2L Gen 2 Sensor Connector. 11
Care and Maintenance 11

SAFETY CONSIDERATIONS

Improper installation, adjustment, alteration, service, maintenance, or use can cause explosion, fire, electrical shock, or other conditions which may cause death, personal injury or property damage. Consult a qualified installer, service agency, or your distributor or branch for information or assistance. The qualified installer or agency must use factory-authorized kits or accessories when modifying this product. Refer to the individual instructions packaged with the kits or accessories when installing.

Follow all safety codes. Wear safety glasses, protective clothing, and work gloves. Use quenching cloth for brazing operations. Have fire extinguisher available. Read these instructions thoroughly and follow all warning or cautions included in literature and attached to the unit. Consult local building codes and the current editions of the National Electrical Code (NEC) NFPA 70.

In Canada, refer to the current editions of the Canadian Electrical Code CSA C22.1.

Recognize safety information. When you see this symbol ⚠ on the unit and in instructions or manuals, be alert to the potential for personal injury. Understand the signal words DANGER, WARNING, CAUTION, and NOTE. These words are used with the safety-alert symbol. DANGER identifies the most serious hazards which will result in severe personal injury or death. WARNING signifies hazards which could result in personal injury or death. CAUTION is used to identify unsafe practices which may result in minor personal injury or product and property damage. NOTE is used to highlight suggestions which will result in enhanced installation, reliability, or operation.

⚠ WARNING

PROPERTY DAMAGE HAZARD — FURNACE/COIL MATCHING

Failure to follow this warning could result in property damage, personal injury, or death.

This coil must be matched to heating equipment that meets all CSA/ANSI Z21.47 or cooling equipment that meets UL 1995 or UL 60335-2-40. Refer to the furnace/blower installation instructions for any potential considerations when installing coils with composite drain pans.

⚠ WARNING

PERSONAL INJURY / PROPERTY DAMAGE HAZARD

Failure to follow this warning could result in property damage, personal injury, or death.

For continued performance, reliability, and safety, the only approved accessories and replacement parts are those specified by the equipment manufacturer. The use of non-manufacturer approved parts and accessories could invalidate the equipment limited warranty and result in fire risk, equipment malfunction, and failure. Please review manufacturer's instructions and replacement part catalogs available from your equipment supplier.

⚠ CAUTION

HOT TUBE WARNING

Failure to follow this caution could result in personal injury and/or property damage.

Refrigerant lines can reach or exceed 130 °F (54 °C). Avoid contact with the vapor header or vapor line, especially in Heating Mode. Do not service A2L refrigerant fan coils while these components are hot to avoid risk of ignition source.

⚠ WARNING

ELECTRICAL SHOCK HAZARD

Failure to follow this warning could result in personal injury or death.

Before installing, modifying or servicing system, always turn off main power to system. There may be more than one disconnect switch. Lock out and tag switch with a suitable warning label.

⚠ WARNING

PERSONAL INJURY HAZARD

Failure to follow this caution may result in personal injury.

This coil contains Nitrogen precharge of 7 – 10 PSIG. Release this pressure through the center of the rubber plugs before removing plugs.

⚠ WARNING

EXPLOSION HAZARD

Failure to follow this warning could result in death, serious personal injury, and/or property damage.

Never use air or gases containing oxygen for leak testing or operating refrigerant compressors. Pressurized mixtures of air or gases containing oxygen can cause an explosion.

⚠ CAUTION

CUT HAZARD

Failure to follow this caution may result in personal injury.

Sheet metal parts may have sharp edges or burrs. Use care and wear appropriate protective clothing and gloves when handling parts.

⚠ CAUTION

UNIT OR PROPERTY DAMAGE HAZARD

Failure to follow this caution may result in property damage.

Make sure that Aluminum tubes do not come in direct contact or allow for condensate run off with a dissimilar metal. Dissimilar metals can cause galvanic corrosion and possible premature failure.

⚠ WARNING

PROPERTY OR PERSONAL INJURY HAZARD

Risk of fire. Flammable refrigerant used.

To be repaired only by trained service personnel. Do not puncture refrigerant tubing.

Auxiliary devices which may be ignition sources shall not be installed in the ductwork, other than auxiliary devices listed for use with the specific appliance. See instructions.

Dispose of refrigerant properly in accordance with federal or local regulations.

IMPORTANT: Nitrogen can leak out through the hole that the needle pierced in the plugs. This does not indicate a leaking coil nor warrant return of the coil.

IMPORTANT: Dry fit all connections to systems (electrical, drains, refrigerant lines, flue & intake, etc.) first to verify no interferences before final connections are made.

INTRODUCTION

IMPORTANT: All accessories MUST be approved for use with R-454B refrigerant systems. Refer to specific installation instructions for additional requirements or considerations of accessories.

Use this instruction manual to install indoor coils on upflow, downflow, or horizontal furnaces in cooling or heating applications. Refer to the AHRI Directory for Approved Rated Combinations. These coils are enclosed in a painted casing, have factory-installed TXVs, and are used with R-454B refrigerant systems.

INSTALLATION

Inspect Equipment

Inspect equipment for damage prior to installation. File claim with shipping company if shipment is damaged or incomplete. Locate the rating plate attached to the coil assembly. Check the rating plate model number and the AHRI Directory to ensure outdoor and indoor units are properly matched and meet job specifications.

These units can be installed in upflow, downflow, or horizontal configurations. Before installation, there are several performance requirements that must be considered, because poor installation can negatively affect performance. This section will briefly discuss those factors.

Table 1 – Coil Connections / Orientations

Model	Nom. Tons	Line Set Connection Tube Size, in.		Flush Fit to Furnace Width, in. (mm)	Fits Next Smaller Furnace Width			90° Rotation to Furnace (4" Min. Transition Required)	180° Rotation to Furnace
		Suction	Liquid		Equal Overhang	Offset Left	Offset Right		
EVM5X24S14B / W5VM24S14XB	2	5/8	3/8	14-3/16 (360)				ALL Upflow, Downflow, Horizontal Right, Horizontal Left	
EVM5X24S17B / W5VM24S17XB	2	5/8	3/8	17-1/2 (445)	X	X	X		
EVM5X25S17B / W5VM25S17XB	2	5/8	3/8	17-1/2 (445)	X	X	X		
EVM5X30S17B / W5VM30S17XB	2.5	3/4	3/8	17-1/2 (445)	X	X	X		
EVM5X31S17B / W5VM31S17XB	2.5	3/4	3/8	17-1/2 (445)	X	X	X		
EVM5X32S17B / W5VC32S17XB	2.5	3/4	3/8	17-1/2 (445)	X	X	X		
EVM5X36S17B / W5VM36S17XB	3	3/4	3/8	17-1/2 (445)	X	X	X		
EVM5X42S21B / W5VM42S21XB	3.5	7/8	3/8	21 (533)	X	X	X		
EVM5X43S21B / W5VM43S21XB	3.5	7/8	3/8	21 (533)	X	X	X		
EVM5X44S21B / W5VM44S21XB	3.5	7/8	3/8	21 (533)	X	X	X		
EVM5X48S21B / W5VM48S21XB	4	7/8	3/8	21 (533)	X	X	X		
EVM5X49S21B / W5VM49S21XB	4	7/8	3/8	21 (533)	X	X	X		
EVM5X60S21B / W5VM60S21XB	5	7/8	3/8	21 (533)	X	X	X		
EVM5X60S24B / W5VM60S24XB	5	7/8	3/8	24-1/2 (622)	X	X	X		
EVM5X61S24B / W5VM61S24XB	5	7/8	3/8	24-1/2 (622)	X	X	X		

Airflow

Airflow amount and distribution are vital to adequate system performance. Problems that can be experienced with incorrect airflow include:

- low system performance
- restricted TXV
- frosted coil
- poor humidity control
- water blow-off

When attaching the coil and building the plenum, pay special attention to the effect these details will have on airflow. After system start-up, check the cfm to insure that it is correct. (Generally, the cfm should be 350 to 450 cfm/ton during normal cooling operation.)

TXV

NOTE: These TXV's are equipped with mechanical connections. There is no brazing required.

A thermal expansion valve is utilized in this coil design to optimize performance and comfort throughout the entire cooling operating range of the system. Special attention needs to be taken to the TXV when installing the coil (Fig. 1):

- Do not overheat valve. Temperatures that exceed 212°F (100°C) can harm valve performance. Use a wet cloth or heat sink when brazing.
- Place liquid filter dryer near indoor unit to reduce the risk of debris clogging the valve.
- Make sure TXV bulb is securely fastened with a metal strap and wrapped in the indentation on vapor line tube.

These specific coils have a factory-installed hard-shutoff TXV designed only for use with R-454B refrigerant. Use only with outdoor units designed for R-454B.

NOTE: These TXV's are factory set at approximately 10° superheat measured at the suction service valve, and are **not** field adjustable.

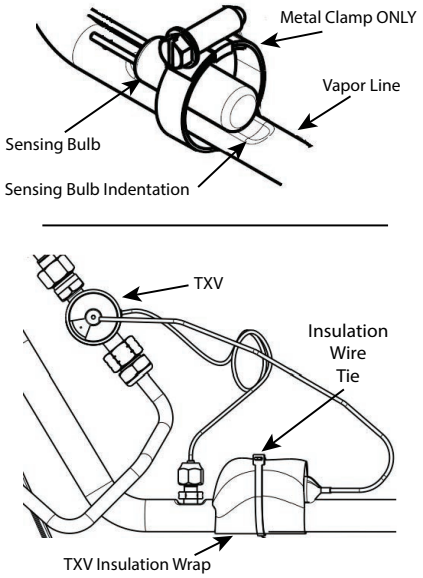

Fig. 1 – TXV Bulb

Cabinet Sweating

If this unit is installed in a garage, attic, or other unconditioned space, special attention needs to be given to the potential of cabinet sweating. A 6-in (152 mm) wide piece of insulation should be wrapped around the coil casing and supply duct connection point.

⚠ CAUTION

ENVIRONMENTAL HAZARD

Failure to follow this caution may result in environmental damage.

Federal regulations require that you do not vent refrigerant to the atmosphere. Recover during system repair or final unit disposal.

Select Installation Procedure

NOTE: Furnace coils are not approved to be used in fan coil or "draw-through" type applications.

To install cased coils in upflow applications, follow the instructions below (Upflow Coil Installation on p4).

To install cased coils in downflow applications, follow the instructions below, (Downflow Coil Installation on p5).

To install cased coils in horizontal applications, follow the instructions below, (Horizontal Coil Installation on p5).

See Table 1 for coil connection options. Refer to instructions for placement of coil casing on furnace.

NOTE: We recommend a 4" transition for peak performance, but it is not required unless stated.

Residential Duct Systems shall be designed in compliance with ACCA's Manual D, Residential Duct Systems (ANSI/ACCA 1 Manual D 2016).

⚠ CAUTION

PROPERTY DAMAGE HAZARD

Failure to follow this caution may result in property damage.

Installing coils rotated 90° from the front of the furnace, in upflow, downflow, or horizontal applications, may cause water blow-off or coil freeze-up due to the concentration of air on one slab of the coil or lack of air to a slab of the coil. It is required that on this type of application, a field-supplied adapter be placed between the coil and furnace to allow air to distribute properly between all slabs of the coil.

Upflow Coil Installation

The cased coil is designed to fit furnaces of the same width (Fig. 2).

1. Set coil in place on upflow furnace discharge air opening.
2. Ensure coil is level for proper condensate drainage. Do not tip coil toward condensate drain. Coil casing does not need to be fastened or screwed to furnace.
3. When installing wider coil on narrower furnace, it is recommended to use a transition adapter (Fig. 3).

NOTE: On upflow installations where the indoor coil is placed in an unconditioned space, a 6" wide piece of insulation should be applied and wrapped around the outside of the coil casing and supply duct contact point. Consult the furnace installation instructions for any special requirements when installing the coil to the furnace.

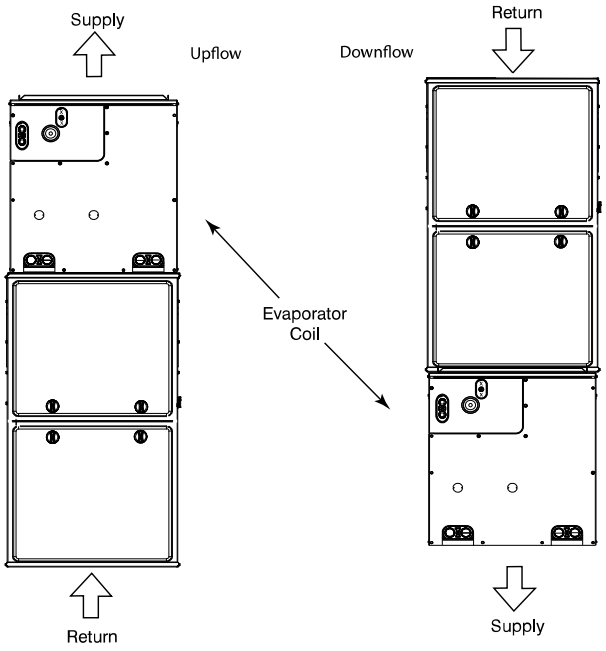

A221121B

Fig. 2 – Typical Flush-Fit Coil Installation on Furnace (recommended)

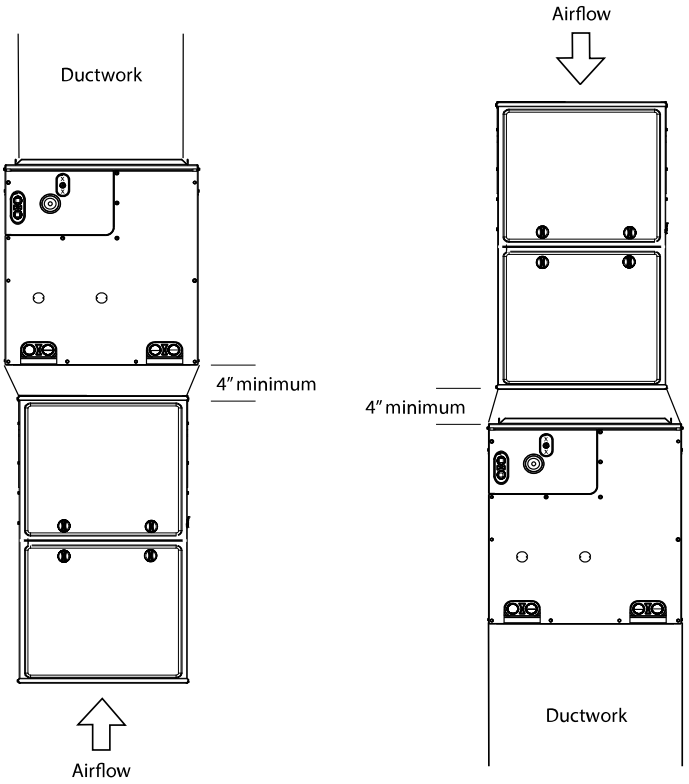

p

A221122B

Fig. 3 – Adapter(s) Installation When Coil is Larger than Furnace (recommended)

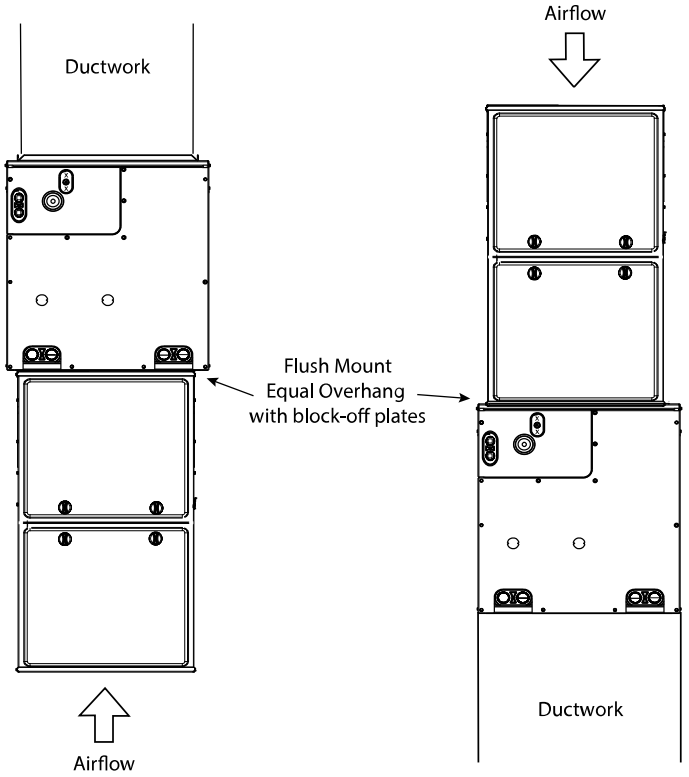

A221123B

Fig. 4 – Smaller Furnace, Equal Overhang, Flush Mount (not recommended)

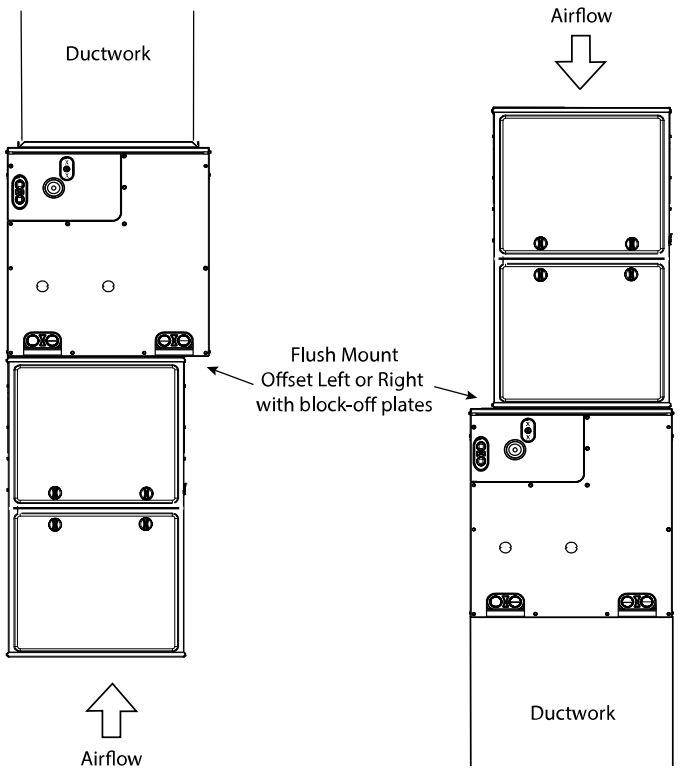

Fig. 5 – Smaller Furnace, Offset, Flush Mount Right or Left (not recommended)

IMPORTANT: Any installation configuration shown here that is noted as '**not recommended**' indicates that this configuration has not been factory tested and therefore full performance specifications have not been certified. In instances where a 'not recommended' installation configuration is required, it is the responsibility of the installer to ensure all performance criteria is met.

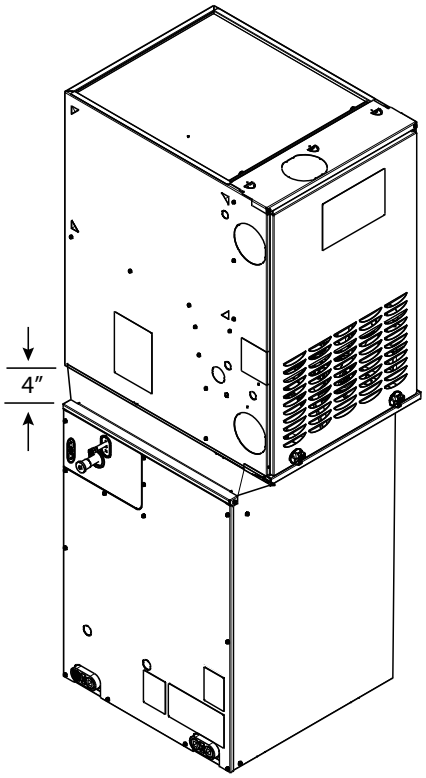

Fig. 6 – 90° Rotation (shown in downflow) 4" Transition Required (not recommended)

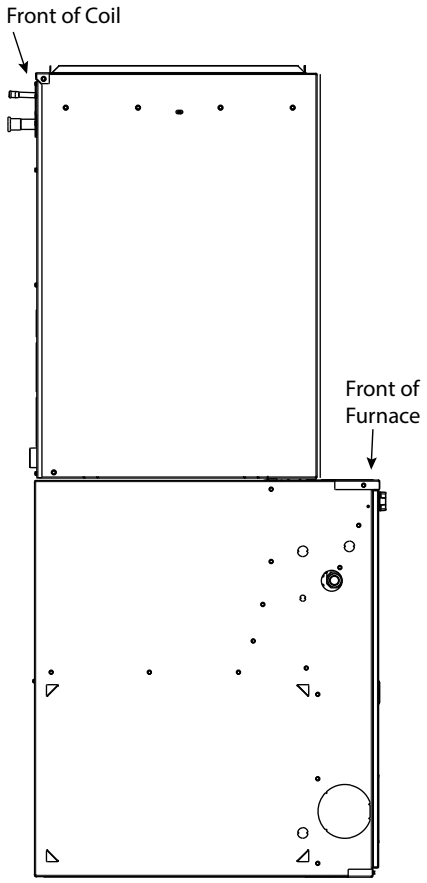

Fig. 7 – 180° Rotation (shown in upflow) (not recommended)

Downflow Coil Installation

NOTE: In downflow installation with a 4-way multipoise furnace, break off perforated duct flanges on furnace. See furnace Installation Instructions.

Horizontal Coil Installation

In horizontal installation with a 4-way multipoise furnace, break off perforated duct flanges on furnace. See furnace Installation Instructions. For condensate connections, use the correct drain lines per Fig. 15.

The unit can be installed on a work platform, secured to roof truss in attic, suspended from hangers on floor joists in crawl space, or installed on blocks. It is designed to allow airflow in either direction, to mate with horizontal-left or horizontal-right furnace installations. Ensure coil cabinet is level side to side and front to back. It is allowable to add up to 1/2-in. additional slope over length and depth of coil cabinet in the direction of drain pan connection (Fig. 10).

NOTE: In horizontal applications, the vertical condensate drain ports must be plugged. When connecting condensate drain lines to the horizontal drain ports, transfer the horizontal drain plugs to the vertical drain pan ports to assure that all vertical drain ports are plugged.

Horizontal Right Installation

1. Use field fabricated attachment plates to secure coil to furnace (Fig. 8).
2. Use self-tapping screws to mount attachment plates to coil casing. Install screws no more than 1" from the outer edge to avoid contacting or interfering with internal components.
3. Connect furnace snugly against coil casing.

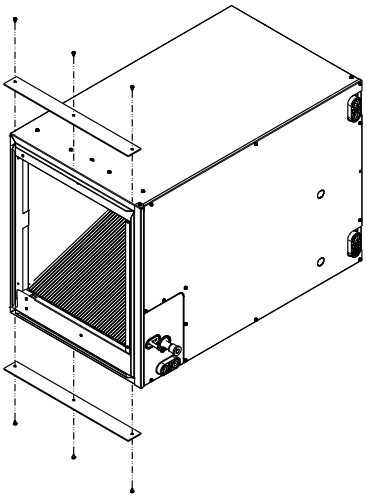

A221202

Fig. 8 – Horizontal Right Attachment Plates

4. Use self-tapping screws to attach furnace (Fig. 9).

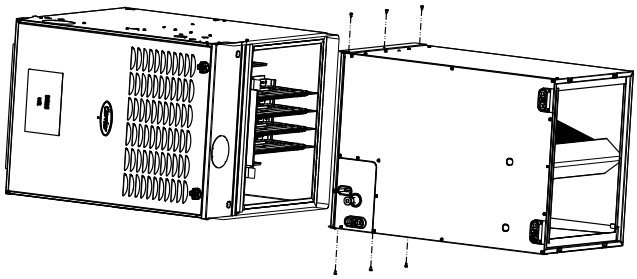

A221203

Fig. 9 – Horizontal Right Installation

5. Seal joint between coil casing and furnace to create an air tight seal using locally approved materials.
6. If coil is wider than furnace, use 18-in minimum transition and self tapping screws to attach furnace (Fig. 10).

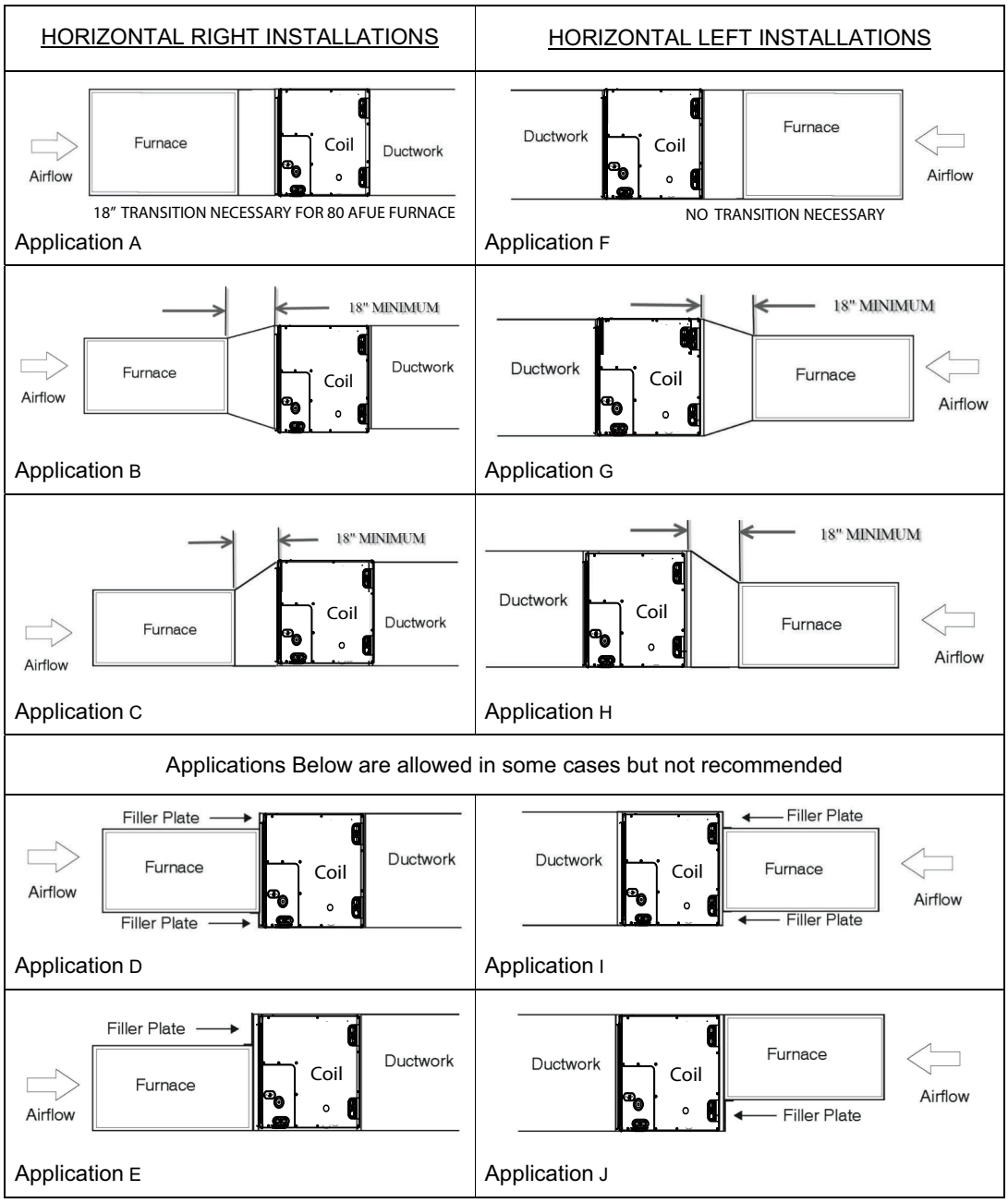

A221216B

Fig. 10 – Horizontal Installation Applications

Horizontal Right with Pan Extension (6124 Size Only)

The pan extension is shipped with the unit. There should not be any gaps between the plastic condensate pan and the pan extension. All condensate should flow from the pan extension to the plastic condensate pan and not leak into the coil cabinet or duct.

Install the pan extension onto the right end of the horizontal-condensate pan. The pan extension is slotted to fit onto the condensate pan edge and will extend into the supply plenum (Fig. 11).

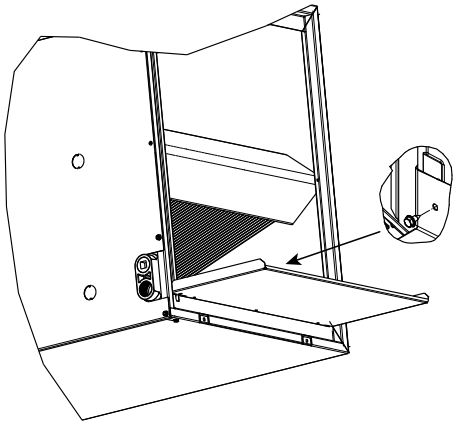

A221204

Fig. 11 – Horizontal-Right Pan Extension (6124 size only)

Horizontal Left Installation

1. Unbend the 4 tabs at the right side of the casing (Fig. 12).
2. Connect furnace snugly against coil casing.

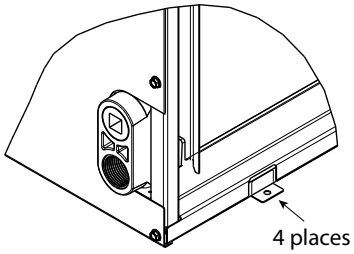

A221205

Fig. 12 – Horizontal Left Installation

3. Use self-tapping screws to attach furnace (Fig. 13).
4. Seal joint between coil casing and furnace to create air tight seal using locally approved materials.
5. If coil is wider than furnace, use 18-in. minimum transition and self tapping screws to attach furnace (Fig. 10).

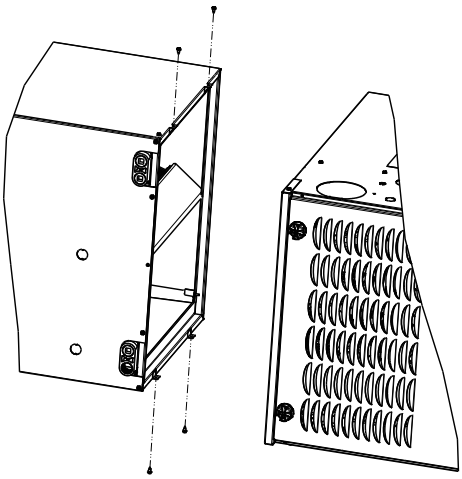

A221206

Fig. 13 – Horizontal Left Installation

Refrigerant Line Connections

⚠ CAUTION

WATER MANAGEMENT HAZARD

Failure to follow this caution could cause product and/or property damage.

The furnace coil door must be properly installed when the coil is in operation. To ensure proper condensate water management, the drain pan must not touch the coil. When properly installed the furnace coil door will correctly align the condensate pan with the coil.

⚠ WARNING

PERSONAL INJURY HAZARD

Failure to follow this warning could result in personal injury.

Wear eye protection. Coil is factory charged with 7–10 psi nitrogen. The coil is under pressure and TXV screen is in place behind liquid line plug. DO NOT remove liquid line plug first, always remove the suction line plug first to depressurize the coil.

NOTE: Factory nitrogen charge may escape past rubber plugs during storage. This does not indicate leaking coil nor warrant return of the coil.

Size and install refrigerant lines according to information provided with outdoor unit. Coil connection tube sizes are shown in Table 1. Route refrigerant lines to the coil in a manner that will not obstruct service access to the unit or removal of the filter.

Do not use damaged, dirty, or contaminated tubing because it may plug refrigerant flow-control device. ALWAYS evacuate the coil and field-supplied tubing before opening outdoor unit service valves.

Connect Refrigerant, Liquid, and Suction Lines

For matched and mismatched systems, use line sizes recommended in outdoor unit Installation Instructions.

⚠ CAUTION

UNIT OR PROPERTY DAMAGE HAZARD

Failure to follow this caution may result in property damage.

Take precautions to ensure Aluminum tubes do not come in direct contact or allow for condensate run off with a dissimilar metal. Dissimilar metals can cause galvanic corrosion and possible premature failure.

Mechanical Fittings

IMPORTANT: Mechanical fittings must meet or exceed maximum operating pressure of 700 psig for evaporator coils.

Follow mechanical fitting supplier's instructions for installation.

Brazed Fittings

⚠ CAUTION

UNIT DAMAGE HAZARD

Failure to follow this caution may result in product damage.

To avoid valve damage to the refrigerant control device while brazing, valves must be wrapped with a heat-sinking material such as a wet cloth.

The coil can be connected to outdoor units using field-supplied tubing of refrigerant grade. Always evacuate tubing and reclaim refrigerant when

making connections or flaring tubing. Leak check connections before insulating entire suction line.

See Table 1 for coil connection tube size.

1. Remove cabinet access door.
2. Remove rubber plugs, suction plug then liquid plug, from coil stubs using a pulling and twisting motion. Hold coil stubs steady to avoid bending or distorting.
3. Remove fitting door with rubber grommets and slide fitting door with grommets onto the refrigerant lines (field line-set), away from braze joints.

⚠ CAUTION

UNIT DAMAGE HAZARD

Failure to follow this caution may result in damage.

All aluminum tubing and coils must be adequately shielded from any copper braze splatter.

4. For optimal performance, swedge stub outs according to the outdoor unit's recommended lineset size. Wrap a heat sinking material such as a wet cloth behind braze joints.
5. Wrap TXV and nearby tubing with a heat-sinking material such as a wet cloth.
6. Use 1/2 psig Nitrogen purge in the suction and out the liquid line.
7. Braze using a Sil-Fos or Phos-copper alloy. Do not use soft solder.
8. After brazing, allow joints to cool. Carefully remove TXV bulb insulation and verify that the TXV bulb is securely fastened with hose clamp. Tighten screw a half-turn past hand tight with TXV bulb placed in the indentation with full contact with the vapor line tube. Re-wrap TXV bulb with insulation.
9. Perform a pressure check of the unit with a nitrogen charge of approx. 200psi. The nitrogen holding charge must not decrease in pressure for 1 hour.
10. Perform a leak check on the unit. Vacuum unit to 500 microns. When isolating the unit from the pump, the pressure shall not rise above 1000 microns in 7 minutes (Fig. 14).

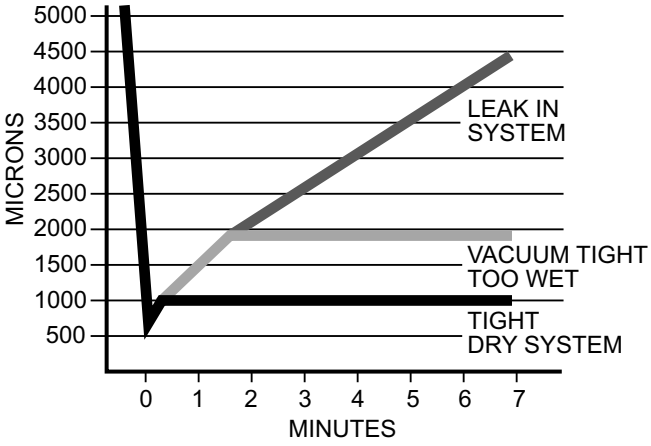

A95424

Fig. 14 – Deep Vacuum Graph

11. Slide fitting door with rubber grommets over joints. Position tubing at center of each grommet to ensure an air seal around the tube. Reinstall cabinet door.

⚠ CAUTION

UNIT DAMAGE HAZARD

Failure to follow this caution may result in product damage.

DO NOT BURY MORE THAN 36 IN. OF REFRIGERANT TUBING IN GROUND. If any section of tubing is buried, there must be a 6-in. vertical rise to the valve connections on the outdoor unit. If more than the recommended length is buried, refrigerant may migrate to cooler buried section during extended periods of unit shutdown, causing refrigerant slugging and possible compressor damage at start-up.

Condensate Drain Line Connection

⚠ CAUTION

PROPERTY DAMAGE HAZARD

Failure to follow this caution may result in property damage.

It is required that all drain connections that are not being used be fitted with ¾-inch male PVC plugs.

When installing over a finished ceiling and/or living area, install a field-fabricated secondary condensate pan under the entire unit.

IMPORTANT: Depending on the date of manufacture, the unit's primary and secondary drains may be reversed from what you are accustomed to. Please check carefully before connecting the drain. Refer to Fig. 15.

The coil is designed to dispose of accumulated water through built-in condensate drain fittings. It is recommended that PVC fittings be used on the condensate pan. Do not over-tighten. Finger tighten plus 1-1/2 turns. **Be sure to install PVC plugs in all unused condensate drain fittings (if not factory supplied).** Six (6) ¾-inch female threaded pipe connections are provided in each coil condensate pan.

It is highly RECCOMMENDED and in some locals is it a code requirement to install a trap on the drain line(s). Please use the following guidelines to assure proper drainage:

Make trap at least 3 inches (76 mm) deep and no higher than the bottom of unit condensate drain opening (Fig. 15).

Install traps in the condensate lines as close to the coil as possible. Make sure that the outlet of each trap is below its connection to the condensate pan to prevent condensate from overflowing the drain pan. Prime all traps, test for leaks, and insulate traps if located above a living area. Condensate drain lines should be pitched downward at a minimum slope of 1" (25 mm) for every 10 ft (3 m) of length. Consult local codes for additional restrictions or precautions.

NOTE: When connecting condensate drain lines, avoid blocking filter access panel, thus preventing filter removal. After connection, prime both primary and secondary condensate traps.

⚠ CAUTION

PROPERTY DAMAGE HAZARD

Failure to follow this warning could result in property damage.

Provide trap with air gap in drain line when connecting to waste (sewer) line.

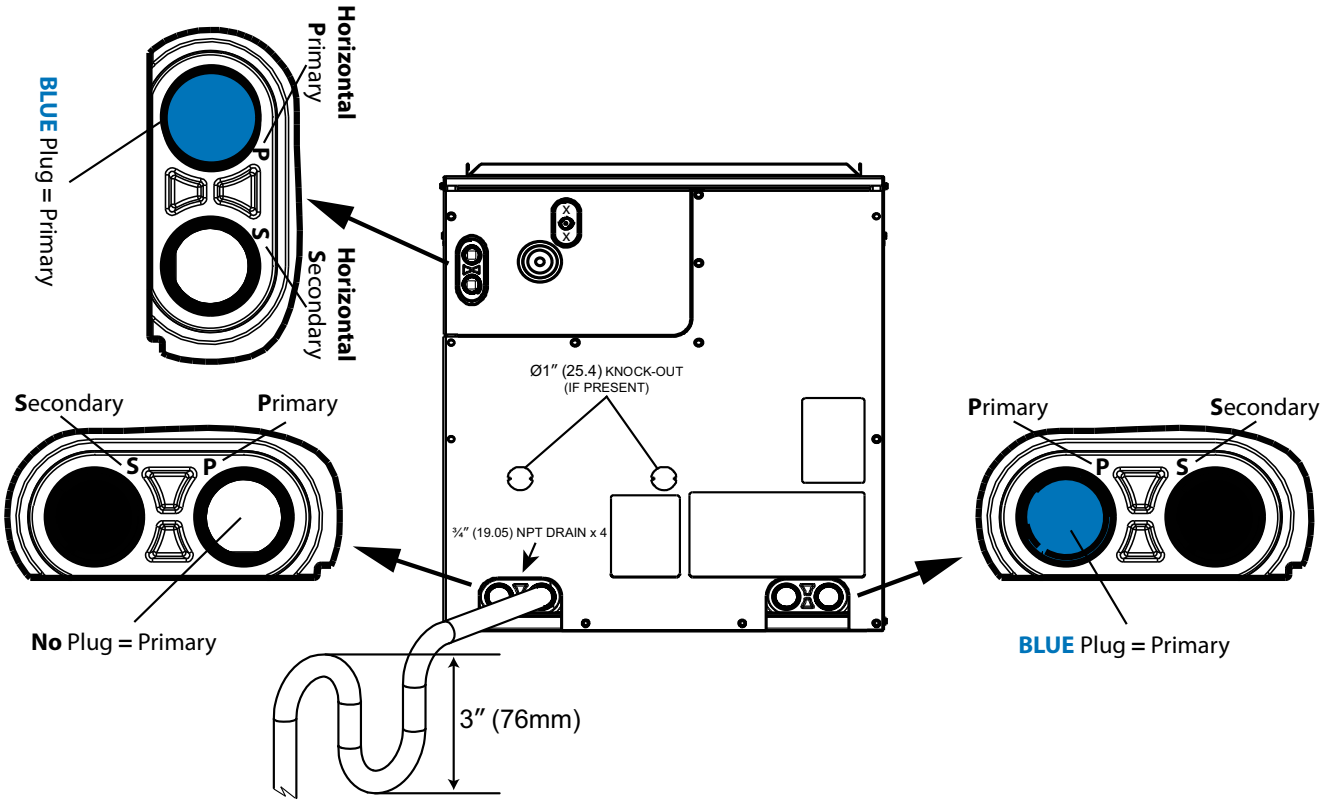

A221126D

Fig. 15 – Condensate Trap and Drains (shown in vertical configuration)

NOTE: If unit is located in or above a living space, where damage may result from condensate overflow, a field-supplied, external condensate pan should be installed underneath the entire unit, and a secondary condensate line (with appropriate trap) should be run from the unit into the pan. Any condensate in this external condensate pan should be drained to a noticeable place. As an alternative to using an external condensate pan, some localities may allow the running of a separate 3/4 inch (19 mm) condensate line (with appropriate trap) per local code to a place where the condensate will be noticeable. The property owner must be informed that when condensate flows from the secondary drain or external condensate pan, the unit requires servicing or property damage may occur.

To further protect against water damage, the International Mechanical Code (IMC) and local code may require a float switch to be installed to shut the equipment OFF if the drainage system is blocked. In 24V wired systems, a float switch listed to UL508 should be wired in the field "R" circuit from the "R" field connection terminal of the furnace leading to the thermostat. When communicating equipment is installed and wired with a communicating wall control, follow unit instructions for wiring the float switch and configuring the wall control.

⚠ WARNING

FIRE HAZARD

Failure to follow this warning could result in property damage, personal injury, or death.

When using a float switch in a secondary condensate pan or drain line, DO NOT wire the switch to break the 24V power directly from the transformer "R" circuit, as this will defeat the refrigerant leak dissipation and mitigation functions.

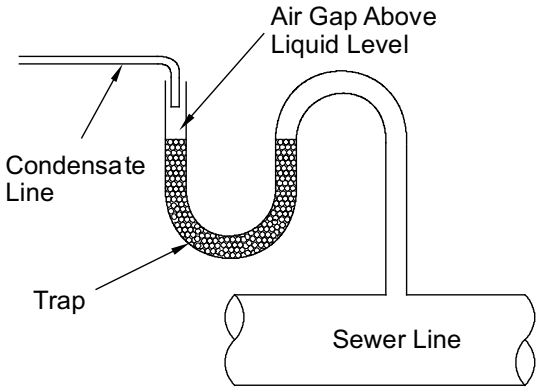

A10216

Fig. 16 – Condensate Drain to Waste Line

Waste Line Connection

If the condensate line is to be connected to a waste (sewer) line, an open trap must be installed ahead of the waste line to prevent escape of sewer gases (Fig. 16).

Humidifier Application

When installing a humidifier in a system which contains a V-coil, consideration must be given to location of coil slabs (Fig. 17).

1. The humidifier should be mounted to the supply plenum or return duct whenever possible.
2. Ensure that humidifier has adequate airflow.

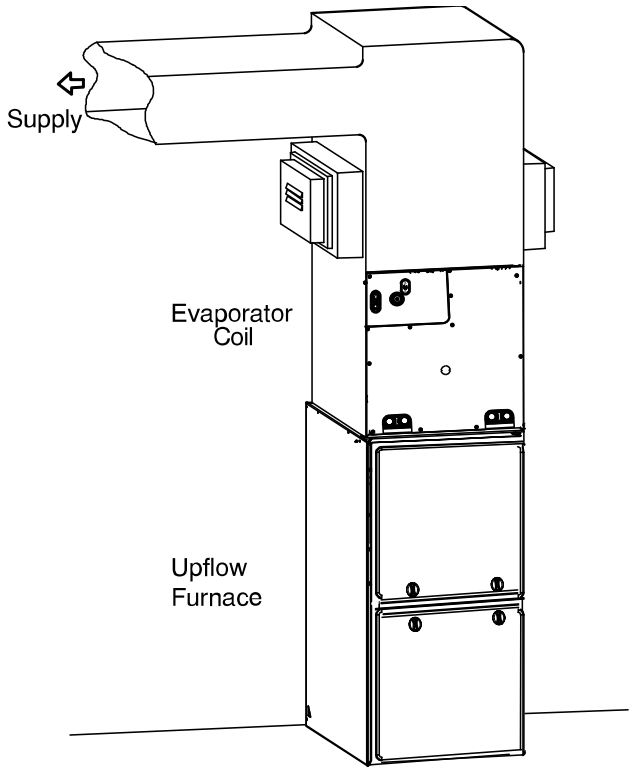

A221127

Fig. 17 – Humidifier Application

ELECTRICAL CONNECTIONS

This evaporator includes low voltage electrical equipment. ALL equipment must be installed for proper operation of the system and to prevent hazardous conditions per UL60335-2-40.

Leak Dissipation System

This system is comprised of a refrigerant sensor and sensor wire harness, and is integrated into the gas furnace's control board.

Disabling or bypassing this system will result in potentially hazardous conditions and improper equipment operation, and void all system warranties and liabilities.

Refrigerant Sensor

The 5V refrigerant sensor will be factory installed inside of the evaporator coil. For proper operation, the sensor must remain in the factory installed location inside of the evaporator coil. Verify that the refrigerant sensor is installed in the correct location and orientation (Fig. 18).

IMPORTANT: This sensor is **Generation 2** and is **not** compatible with **Generation 1 dissipation boards**. Refer to the Product Data Sheet for details on available dissipation accessory kits to ensure proper compatibility and performance.

⚠ WARNING

PRODUCT OPERATION / INJURY HAZARD

Failure to follow this warning could cause property damage or personal injury.

Make sure the sensor is not exposed to significant amounts of dust/dirt contamination. This could clog the sensor and prevent proper functioning. For sensor cleaning instructions, refer to service manual.

IMPORTANT: When installing in horizontal orientation, the sensor **must** be moved to the correct location for horizontal application.

A label will indicate where the sensor must be moved for horizontal use (Fig. 19).

IMPORTANT: Sensor **must** be installed with the connector facing **down**. Incorrect sensor position could result in premature failure.

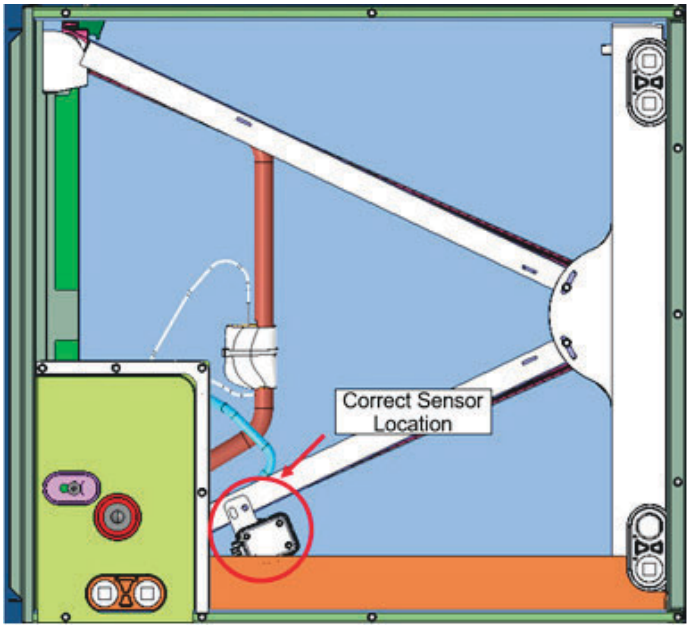

A230508

Fig. 18 – R-454B Leak Sensor Mounting Location (Horizontal only)

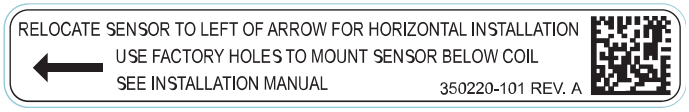

A230509A

Fig. 19 – Sensor Location Label

Sensor Wire Harness

The sensor wire harness will be factory installed to the sensor inside of the evaporator coil. Verify that the sensor wire harness is connected to the refrigerant sensor (Fig. 18).

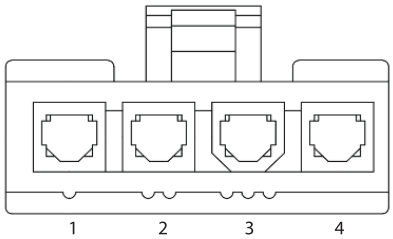

A260411

Fig. 20 – Sensor Wire Harness Pin Layout

Leak Dissipation Control Board

Refer to the Installation Instructions for the gas furnace. It contains detailed information on the communicating A2L plug and its connection to the furnace control. Follow these specifications to ensure proper installation and integration with the dissipation system.

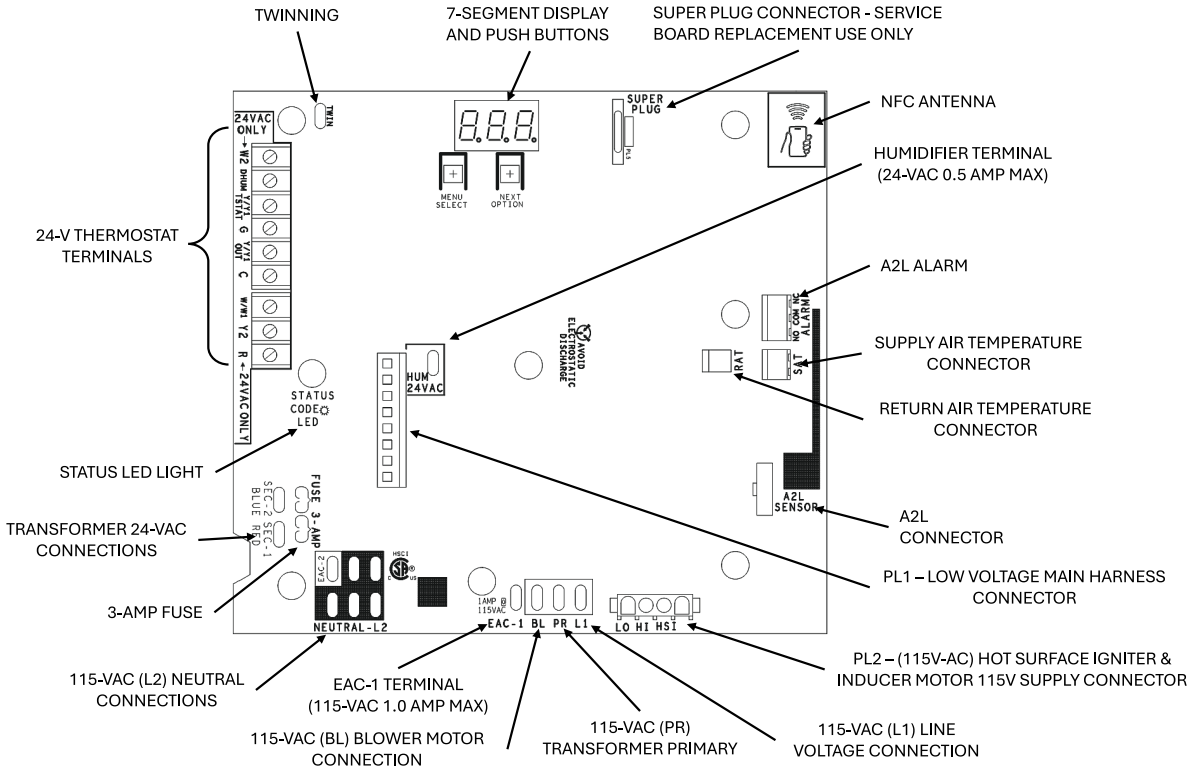

Fig. 21 – Connector for A2L G2 Sensor on Gas Furnace Control Board

TROUBLESHOOTING

For Troubleshooting information and actions, refer to the gas furnace Installation, Start-Up, Operating and Service and Maintenance instructions, or dissipation accessory kit.

A2L GEN 2 SENSOR CONNECTOR

⚠ WARNING

PERSONAL INJURY HAZARD

Failure to follow this warning could result in property damage, personal injury, or death.

Operational checks to confirm proper dissipation system function must be performed prior to normal operation of the system.

1. After installing evaporator coil and line set, route the sensor cable through the liquid grommet on the fitting door. Ensure that the wire harness has tension relief and does not come into contact with sharp edges.
2. Route the A2L harness to the furnace and connect it to the control board of the gas furnace. Refer to the furnace model Installation Instructions.
3. During operational function testing refer to the dissipation kit or gas furnace manual for proper dissipation system function. **This must be performed prior to normal operation system.**

CARE AND MAINTENANCE

To continue high performance and minimize possible equipment failure, it is essential that periodic maintenance be performed on this equipment. Consult your local dealer as to the proper frequency of maintenance, but it should be done at least annually.

The ability to properly perform maintenance on this equipment requires certain mechanical skills and tools. If you do not possess these, contact your dealer for maintenance. The only consumer service recommended or required is filter replacement or cleaning on a monthly basis.

⚠ CAUTION

ENVIRONMENTAL HAZARD

Failure to follow this caution may result in environmental damage.

Remove and recycle all components or materials (i.e., oil, refrigerant, etc.) before unit final disposal.

POWER-V™ TECHNOLOGY

NOTES:

©2026 Carrier. All rights reserved.
Edition Date: 10/26

Catalog No: IM-EVM5X-W5VM-07

Replaces: **IM-EVM5X-W5VM-06**

Manufacturer reserves the right to change, at any time, specifications and designs without notice and without obligations.