PG80MSA/PG80MSLA
80% AFUE, Single-Stage, Multi-Speed ECM, 4-Way Multipoise, Non–Condensing Gas Furnace

Installation, Start–Up, Operating and Service and Maintenance Instructions

NOTE: Read the entire instruction manual before starting the installation.

TABLE OF CONTENTS

Table 1 – Dimensions 2
SAFETY CONSIDERATIONS 3
INTRODUCTION 4
ELECTROSTATIC DISCHARGE (ESD) PRECAUTIONS PROCEDURE 5
LOCATION 6
AIR FOR COMBUSTION AND VENTILATION 7
Table 2 – Minimum Free Area Required for Each Combustion Air Opening or Duct to Outdoors 8
Table 3 – Minimum Space Volumes for 100% Combustion, Ventilation, and Dilution from Indoors 8
INSTALLATION 9
Table 4 – Opening Dimensions - In. (mm) 11
FILTER ARRANGEMENT 12
AIR DUCTS 12
GAS PIPING 13
Table 5 – Maximum Capacity of Pipe* 14
ELECTRICAL CONNECTIONS 15
Table 6 – Electrical Data 16
VENTING 18
Table 7 – Combined Appliance Maximum Input Rating in Thousands of BTUh per Hour 20
Table 8 – Minimum Allowable Input Rating of Space-Heating Appliance in Thousands of BTUh per Hour 20
AIR DELIVERY - CFM 24
Table 9 – Air Delivery - CFM (with filter)* 24
Table 10 – Airflow Settings 28
FURNACE CONTROL PROGRAMMING AND NAVIGATION 28
Table 11 – System Status Display Codes 29
Table 12 – Main Menu Options 29
SERVICE LABEL 30
START-UP, ADJUSTMENT, AND SAFETY CHECK 31
Table 13 – Test Sequence 31
WIRING DIAGRAM 32
Table 14 – Altitude Derate Multiplier for U.S.A. 33
Table 15 – Gas Rate (Cu Ft./Hr.) 34
Table 16 – Orifice Size* and Manifold Pressure (in. w.c.) for Gas Input Rate 34
Table 17 – Orifice Size* And Manifold Pressure (in. w.c.) for Gas Input Rate 35
SERVICE AND MAINTENANCE PROCEDURES 36
CARE AND MAINTENANCE 37
Table 18 – Filter Size Information (In. / mm) 38
SEQUENCE OF OPERATION 40
TROUBLESHOOTING 42
PARTS REPLACEMENT INFORMATION GUIDE 46
MODEL NOMENCLATURE 46

To learn more about this appliance and installation via a mobile device, go to https://www.weathermaker.com/en/us/nfc or use the QR code below. To access airflow tables or troubleshooting guide on your mobile device go to https://mlctraining.com/training/techdocs/37/ or use the QR code below.

Mobile App QR Code

Airflow QR Code

A220930

Use of the AHRI Certified TM Mark indicates a manufacturer's participation in the program. For verification of certification for individual products, go to www.ahridirectory.org .

ISO 9001 Quality

A200103

⚠ WARNING

CARBON MONOXIDE POISONING HAZARD

Failure to follow this warning could result in personal injury and/or death.

Carbon Monoxide (CO) is a colorless, odorless, and tasteless poisonous gas that can be fatal when inhaled. Follow all installation, maintenance, and service instructions. See additional information below regarding the installation of a CO Alarm.

Most states in the USA and jurisdictions in Canada have laws that require the use of Carbon Monoxide (CO) alarms with fuel burning products. Examples of fuel burning products are furnaces, boilers, space heaters, generators, water heaters, stoves/ranges, clothes dryers, fireplaces, incinerators, automobiles, and other internal combustion engines. Even if there are no laws in your jurisdiction requiring a CO Alarm, it's highly recommended that whenever any fuel burning product is used in or around the home or business that the dwelling be equipped with a CO Alarm(s). The Consumer Product Safety Commission recommends the use of CO Alarm(s). The CO Alarm(s) must be installed, operated, and maintained according to the CO Alarm manufacturer's instructions. For more information about Carbon Monoxide, local laws, or to purchase a CO Alarm online, please visit the following website. https://www.kidde.com.

Portions of the text and tables are reprinted from current edition of NFPA 54/ANSI Z223.1E, with permission of National Fire Protection Association, Quincy, MA 02269 and American Gas Association, Washington DC 20001. This reprinted material is not the complete and official position of the NFPA or ANSI on the referenced subject, which is represented only by the standard in its entirety.

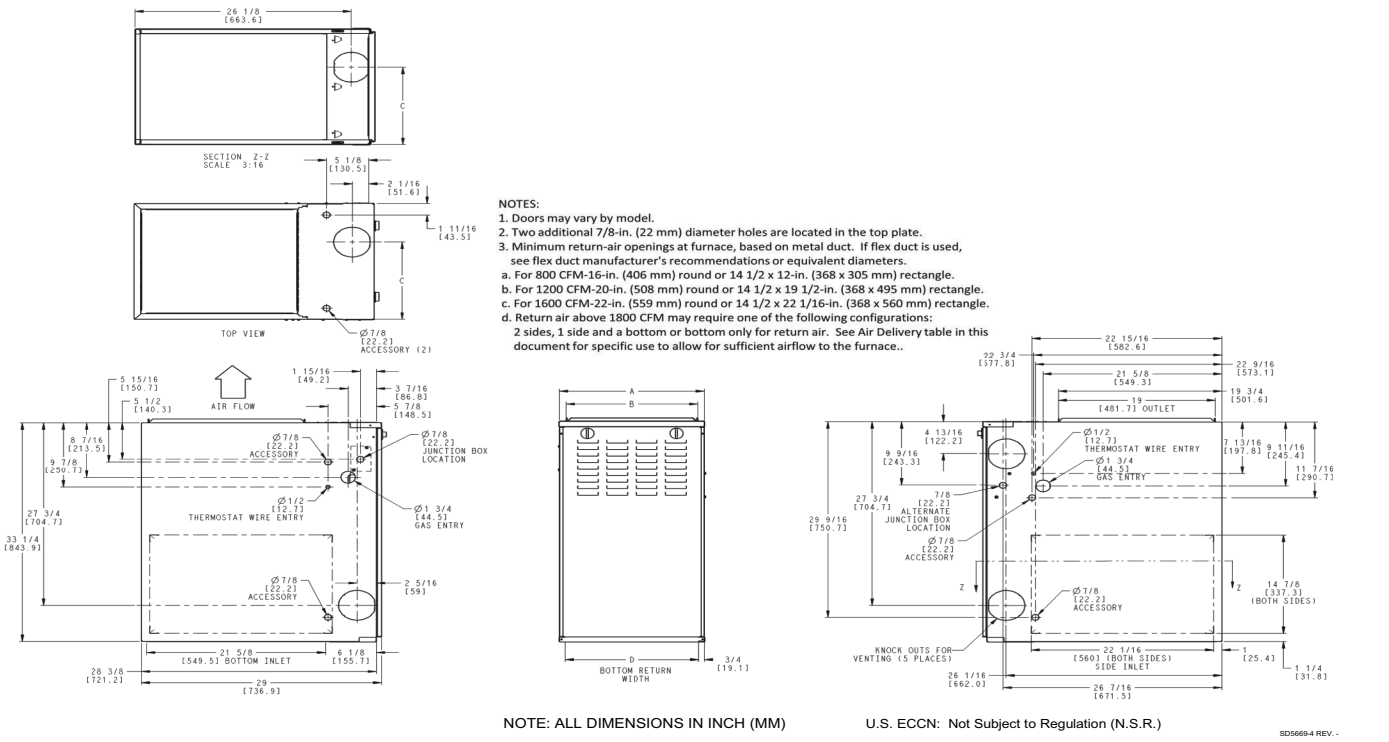

A210785

Fig. 1 – Dimensional Drawing

Table 1 – Dimensions

Unit Size	A CABINET WIDTH	B OUTLET WIDTH	C TOP AND BOTTOM FLUE COLLAR	D BOTTOM INLET WIDTH	VENT CONNECTION SIZE	SHIP WT. LB. (KG)
36045A	14-3/16 (360)	12-9/16 (319)	9-5/16 (237)	12-11/16 (322)	4 (102)	108 (49)
42045B	17-1/2 (445)	15-7/8 (403)	11-9/16 (294)	16 (406)	4 (102)	121 (55)
36070A	14-3/16 (360)	12-9/16 (319)	9-5/16 (237)	12-11/16 (322)	4 (102)	114 (52)
36070B	17-1/2 (445)	15-7/8 (403)	11-9/16 (294)	16 (406)	4 (102)	124 (56)
48070B	17-1/2 (445)	15-7/8 (403)	11-9/16 (294)	16 (406)	4 (102)	127 (58)
48070C	21 (533)	19-3/8 (492)	13-5/16 (338)	19-1/2 (495)	4 (102)	139.5 (63)
42090B	17-1/2 (445)	15-7/8 (403)	11-9/16 (294)	16 (406)	4 (102)	133 (60)
48090C	21 (533)	19-3/8 (492)	13-5/16 (338)	19-1/2 (495)	4 (102)	140.5 (64)
60090C	21 (533)	19-3/8 (492)	13-5/16 (338)	19-1/2 (495)	4 (102)	147 (67)
60110C	21 (533)	19-3/8 (492)	13-5/16 (338)	19-1/2 (495)	4 (102)	150 (68)
60110D	24-1/2 (622)	22-7/8 (581)	15-1/16 (383)	23 (584)	4 (102)	165 (75)
60135D	24-1/2 (622)	22-7/8 (581)	15-1/16 (383)	23 (584)	4 (102)*	167 (76)
60155D	24-1/2 (622)	22-7/8 (581)	15-1/16 (383)	23 (584)	4 (102)*	171 (77)

*. 135 and 155 size furnaces requires a 5 or 6-in. (127 or 152 mm) vent. Use a vent adapter between furnace and vent stack. See Installation Instructions for complete installation requirements

SAFETY CONSIDERATIONS

⚠ WARNING

FIRE, INJURY, OR DEATH HAZARD

Failure to follow this warning could result in property damage, personal injury, or death.

This furnace was manufactured to operate with natural gas. When fuel supply is Liquid Propane (LP), this furnace must be converted with a factory approved LP conversion kit. See furnace rating plate for approved conversion kit.

⚠ WARNING

FIRE, EXPLOSION, ELECTRICAL SHOCK, AND CARBON MONOXIDE POISONING HAZARD

Failure to follow this warning could result in dangerous operation, serious injury, death, or property damage.

Improper installation, adjustment, alteration, service, maintenance, or use could cause carbon monoxide poisoning, explosion, fire, electrical shock, or other conditions which may cause personal injury or property damage. Consult a qualified service agency, local gas supplier, or your distributor or branch for information or assistance. The qualified service agency must use only factory-authorized accessories and replacement parts when installing and servicing this product.

⚠ WARNING

FIRE, EXPLOSION, ELECTRICAL SHOCK, AND CARBON MONOXIDE POISONING HAZARD

Failure to follow this warning could result in dangerous operation, personal injury, death, or property damage.

Furnaces shall NOT be twinned (i.e. tandem or staged operation) unless approved in factory technical specifications literature for the furnace. A factory authorized, field-supplied Twinning Kit MUST be used. Consult furnace pre-sale literature for specific models approved for twinning and the correct twinning kit. Twinned furnaces must be installed on both a common supply AND a common return duct system as shown in the Twinning Kit Installation Instructions. Only two furnaces can be twinned on a common supply and return duct system using a factory authorized twinning kit.

⚠ CAUTION

FURNACE RELIABILITY HAZARD

Improper installation or misapplication of furnace may require excessive servicing or cause premature component failure.

Application of this furnace should be indoors with special attention given to vent sizing and material, gas input rate, air temperature rise, unit leveling, and unit sizing.

⚠ WARNING

FIRE, INJURY, OR DEATH HAZARD

Failure to follow this warning could result in property damage, personal injury, or death.

Do not bypass any of the safety controls in the furnace, including but not limited to the main limit switch, rollout or burner thermal switch, and pressure switch/pressure transducer.

⚠ WARNING

PERSONAL INJURY AND PROPERTY DAMAGE HAZARD

Failure to follow this warning could result in property damage, personal injury, or death.

For continued performance, reliability, and safety, the only approved accessories and replacement parts are those specified by the equipment manufacturer. The use of non-manufacturer approved parts and accessories could invalidate the equipment limited warranty and result in fire risk, equipment malfunction, and failure. Please review manufacturer's instructions and replacement part catalogs available from your equipment supplier

Improper installation, adjustment, alteration, service, maintenance, or use can cause explosion, fire, electrical shock, or other conditions which may cause death, personal injury, or property damage. Consult a qualified installer, service agency, or your distributor or branch for information or assistance. The qualified installer or agency must use factory-authorized kits or accessories when modifying this product. Refer to the individual instructions packaged with the kits or accessories when installing.

Follow all safety codes. Wear safety glasses, protective clothing, and work gloves. Have a fire extinguisher available. Read these instructions thoroughly and follow all warnings or cautions include in literature and attached to the unit. Consult local building codes, the current editions of the current edition of National Fuel Gas Code (NFGC) NFPA 54/ANSI Z223.1 and the current edition of National Electrical Code (NEC) NFPA 70.

Recognize safety information. This is the safety-alert symbol ⚠. When you see this symbol on the unit and in instructions or manuals, be alert to the potential for personal injury.

Understand the signal words **DANGER**, **WARNING**, and **CAUTION**. These words are used with the safety-alert symbol. **DANGER** identifies the most serious hazards which will result in severe personal injury or death. **WARNING** signifies hazards which could result in personal injury or death. **CAUTION** is used to identify unsafe practices which may result in minor personal injury or product and property damage. **NOTE** is used to highlight suggestions which will result in enhanced installation, reliability, or operation.

⚠ CAUTION

CUT HAZARD

Failure to follow this caution may result in personal injury.

Sheet metal parts may have sharp edges or burrs. Use care and wear appropriate protective clothing, safety glasses and gloves when handling parts and servicing furnaces.

The following additional safety considerations should be followed for gas furnaces:

1. Use only with type of gas approved for this furnace. Refer to the furnace rating plate.
2. Install this furnace only in a location and position as specified in the “Location” section of these instructions.
3. Provide adequate combustion and ventilation air to the furnace space as specified in “Air for Combustion and Ventilation” section.
4. Combustion products must be discharged outdoors. Connect this furnace to an approved vent system only, as specified in the “Venting” section of these instructions.

5. Never test for gas leaks with an open flame. Use a commercially available soap solution made specifically for the detection of leaks to check all connections, as specified in the “Gas Piping” section.
6. Always install furnace to operate within the furnace’s intended temperature-rise range with a duct system which has an external static pressure within the allowable range, as specified in the “Start-Up, Adjustments, and Safety Check” section. See furnace rating plate.
7. When a furnace is installed so that supply ducts carry air circulated by the furnace to areas outside the space containing the furnace, the return air shall also be handled by duct(s) sealed to the furnace casing and terminating outside the space containing the furnace. See “Air Ducts” section.
8. A gas-fired furnace for installation in a residential garage must be installed as specified in the warning box in the “Location” section.
9. The furnace may be used for construction heat provided that the furnace installation and operation complies with the first CAUTION in the LOCATION section of these instructions.
10. These Multipoise Gas-Fired Furnaces are CSA (formerly A.G.A. and C.G.A). design-certified for use with natural and propane gases (see furnace rating plate) and for installation in alcoves, attics, basements, closets, utility rooms, crawlspaces, and garages. The furnace is factory-shipped for use with natural gas. A CSA listed accessory gas conversion kit is required to convert furnace for use with propane gas.
11. See Fig. 2 for required clearances to combustible construction.
12. Maintain a 1-in. (25 mm) clearance from combustible materials to supply air ductwork for a distance of 36 inches (914 mm) horizontally from the furnace. See current edition of NFPA 90B or local code for further requirements.
13. These furnaces SHALL NOT be installed directly on carpeting, tile, or any other combustible material other than wood flooring. In downflow installations, factory accessory floor base MUST be used when installed on combustible materials and wood flooring. Special base is not required when this furnace is installed on manufacturer’s cased evaporator coils or when manufacturer’s evaporator coil casing is used. See Fig. 2 for clearance to combustible construction information.

INTRODUCTION

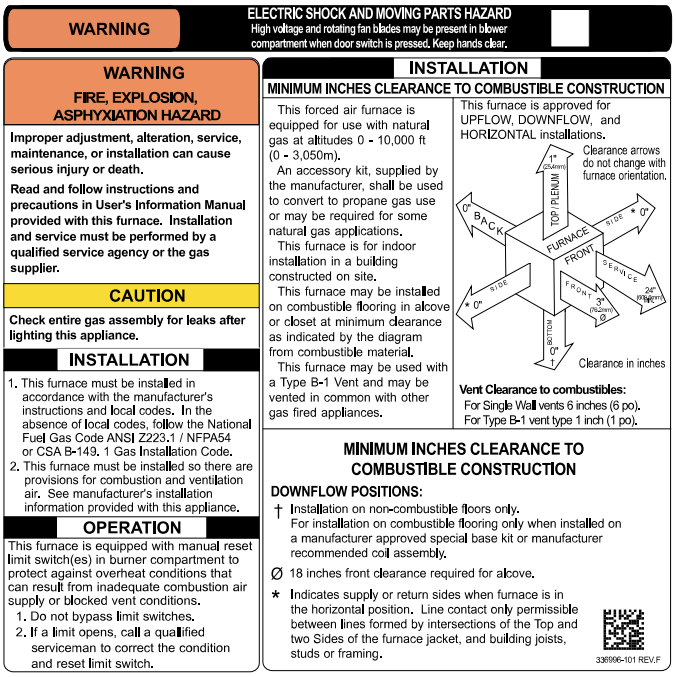

A220231

Fig. 2 – Clearances to Combustibles

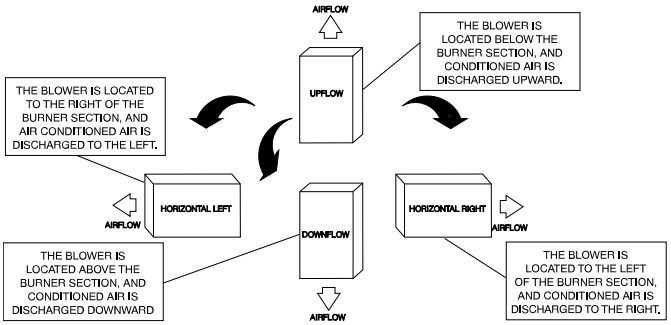

A02097

Fig. 3 – Multipoise Orientations

This 4-way multipoise Category I fan-assisted furnace is CSA design-certified. A Category I fan-assisted furnace is an appliance equipped with an integral mechanical means to either draw or force products of combustion through the combustion chamber and/or heat exchanger. The furnace is factory-shipped for use with natural gas.

This furnace is not approved for installation in mobile homes, recreational vehicles, or outdoors. This furnace is designed for minimum continuous return-air temperature of 60°F (16°C) db or intermittent operation down to 55°F (13°C) db such as when used with a night setback thermostat. Return-air temperature must not exceed 80°F (27°C) db. Failure to follow these return-air temperature limits may affect reliability of heat exchangers, motors, and controls (see Fig. 4).

For accessory installation details, refer to the applicable instruction literature.

NOTE: Remove all shipping brackets and materials before operating the furnace.

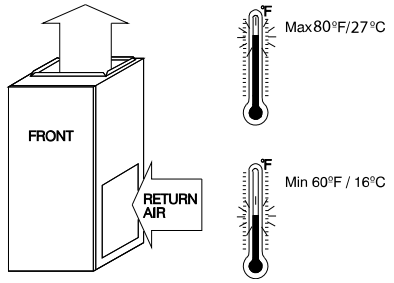

Fig. 4 – Return Air Temperature

WARNING

FIRE HAZARD

Failure to follow this warning could result in personal injury, death and/or property damage.

Do not install the furnace on its back or hang furnace with control compartment facing downward. Safety control operation will be adversely affected. Never connect return-air ducts to the back of the furnace (see Fig. 5).

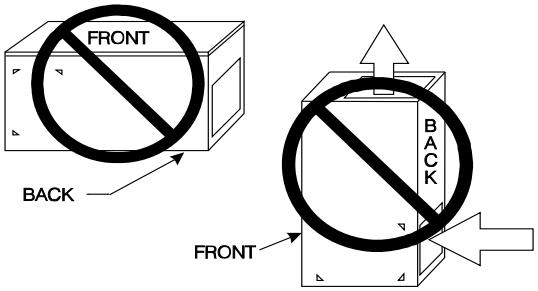

Fig. 5 – Prohibit Installation on Back

WARNING

FIRE HAZARD

Failure to follow this warning could result in personal injury, death, and/or property damage.

When the furnace is installed in a residential garage, the burners and ignition sources must be located at least 18 inches above the floor. The furnace must be located or protected to avoid damage by vehicles. When the furnace is installed in a public garage, airplane hangar, or other building having a hazardous atmosphere, the furnace must be installed in accordance with the NFGC (see Fig. 6).

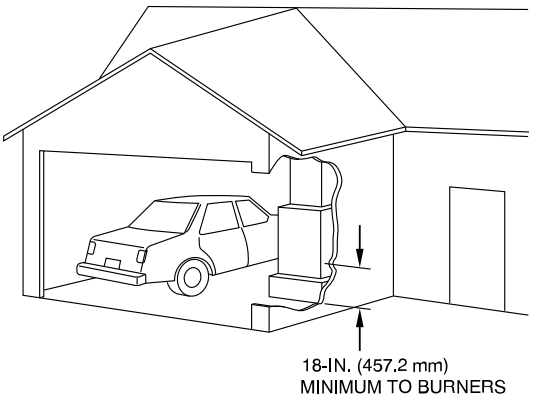

Fig. 6 – Installation in a Garage

CODES AND STANDARDS

Follow all national and local codes and standards in addition to these instructions. The installation must comply with regulations of the serving gas supplier, local building, heating, plumbing, and other codes. In absence of local codes, the installation must comply with the national codes listed below and all authorities having jurisdiction.

In the United States, follow all codes and standards for the following:

Safety

- USA: Current edition of National Fuel Gas Code (NFGC) NFPA 54/ANSI Z223.1 and the Installation Standards, Warm Air Heating and Air Conditioning Systems ANSI/NFPA 90B.

General Installation

- Current edition of the NFGC and the NFPA 90B. For copies, contact the National Fire Protection Association Inc., Batterymarch Park, Quincy, MA 02269; (www.NFPA.org) or for only the NFGC, contact the American Gas Association, 400 N. Capitol Street, N.W., Washington, DC 20001 (www.AGA.org).

Combustion and Ventilation Air

- Current edition of NFGC NFPA54/ANSI Z223.1 Section 9.3, Air for Combustion and Ventilation.

Duct Systems

- Air Conditioning Contractors Association (ACCA) Manual D, Sheet Metal and Air Conditioning Contractors National Association (SMACNA), or American Society of Heating, Refrigeration, and Air Conditioning Engineers (ASHRAE) 2005 Fundamentals Handbook Chapter 35 or 2004 HVAC Systems and Equipment Handbook Chapters 9 and 16.

Acoustical Lining and Fibrous Glass Duct

- Current edition of SMACNA and NFPA 90B as tested by UL Standard 181 for Class I Rigid Air Ducts.

Gas Piping and Gas Pipe Pressure Testing

- Current edition of NFGC NFPA54/ANSI Z223.1; chapters 5, 6, 7, and 8 and National Plumbing Codes.

Electrical Connections

- Current edition of National Electrical Code (NEC) NFPA 70.

Venting

- Current edition of NFGC NFPA 54 / ANSI Z223.1; Chapters 12 and 13.

ELECTROSTATIC DISCHARGE (ESD) PRECAUTIONS PROCEDURE

1. Disconnect all power to the furnace. Multiple disconnects maybe required. DO NOT TOUCH THE CONTROL OR ANY WIRE CONNECTED TO THE CONTROL PRIOR TO DISCHARGING YOUR BODY'S ELECTROSTATIC CHARGE TO GROUND.

CAUTION

FURNACE RELIABILITY HAZARD

Improper installation or service of furnace may cause premature furnace component failure.

Electrostatic discharge can affect electronic components. Follow the Electrostatic Discharge Precautions Procedure listed below during furnace installation and servicing to protect the furnace electronic control. Precautions will prevent electrostatic discharges from personnel and hand tools which are held during the procedure. These precautions will help to avoid exposing the control to electrostatic discharge by putting the furnace, the control, and the person at the same electrostatic potential.

2. Firmly touch the clean, unpainted, metal surface of the furnace chassis which is close to the control. Firmly touch the clean, unpainted, metal surface of the furnace chassis which is close to the control. Tools held in a person's hand during grounding will be satisfactorily discharged.
3. After touching the chassis, you may proceed to service the control or connecting wires as long as you do nothing to recharge your body with static electricity (for example; DO NOT move or shuffle your feet, do not touch ungrounded objects, etc.).
4. If you touch ungrounded objects (and recharge your body with static electricity), firmly touch a clean, unpainted metal surface of the furnace again before touching control or wires.
5. Use this procedure for installed and uninstalled (ungrounded) furnaces.
6. Before removing a new control from its container, discharge your body's electrostatic charge to ground to protect the control from damage. If the control is to be installed in a furnace, follow items 1 through 4 before bringing the control or yourself in contact with the furnace. Put all used and new controls into containers before touching ungrounded objects.
7. An ESD service kit (available from commercial sources) may also be used to prevent ESD damage.

LOCATION

GENERAL

This multipoise furnace is shipped in packaged configuration. Some assembly and modifications are required when used in any of the four applications (see Fig. 3).

This furnace must:

- be installed so the electrical components are protected from water.
- not be installed directly on any combustible material other than wood flooring for upflow applications. Downflow installations require use of a factory-approved floor base or coil assembly when installed on combustible materials or wood flooring (refer to SAFETY CONSIDERATIONS).
- be located as close to the chimney or vent and attached to an air distribution system. Refer to Air Ducts section.
- be provided ample space for servicing and cleaning. Always comply with minimum fire protection clearances shown on the furnace clearance to combustible label.

The following types of furnace installations may require OUTDOOR AIR for combustion due to chemical exposures:

- Commercial buildings
- Buildings with indoor pools
- Laundry rooms
- Hobby or craft rooms, and
- Chemical storage areas

If air is exposed to the following substances, it should not be used for combustion air, and outdoor air may be required for combustion:

- Permanent wave solutions
- Chlorinated waxes and cleaners
- Chlorine based swimming pool chemicals
- Water softening chemicals
- De-icing salts or chemicals
- Carbon tetrachloride
- Halogen type refrigerants
- Cleaning solvents (such as perchloroethylene)
- Printing inks, paint removers, varnishes, etc.
- Hydrochloric acid
- Cements and glues
- Antistatic fabric softeners for clothes dryers
- Masonry acid washing materials

All fuel-burning equipment must be supplied with air for fuel combustion. Sufficient air must be provided to avoid negative pressure in the equipment room or space. A positive seal must be made between the furnace cabinet and the return-air duct to prevent pulling air from the burner area and from draft safeguard opening.

LOCATION RELATIVE TO COOLING EQUIPMENT

The cooling coil must be installed parallel with, or on the downstream side of the unit to avoid condensation in the heat exchangers. When installed parallel with the furnace, dampers or other flow control must prevent chilled air from entering the furnace. If the dampers are manually operated, they must be equipped with means to prevent operation of either unit unless the damper is in the full-heat or full-cool position.

⚠ CAUTION

PERSONAL INJURY AND/OR PROPERTY DAMAGE HAZARD

Improper use or installation of this furnace may cause premature furnace component failure.

This gas furnace may be used for heating buildings under construction provided that:

- The furnace is permanently installed with all electrical wiring, piping, venting and ducting installed according to these installation instructions. A return air duct is provided, sealed to the furnace casing, and terminated outside the space containing the furnace. This prevents a negative pressure condition as created by the circulating air blower, causing a flame rollout and/or drawing combustion products into the structure.
- The furnace is controlled by a thermostat. It may not be "hot wired" to provide heat continuously to the structure without thermostatic control.
- Clean outside air is provided for combustion. This is to minimize the corrosive effects of adhesives, sealers and other construction materials. It also prevents the entrainment of drywall dust into combustion air, which can cause fouling and plugging of furnace components.
- The temperature of the return air to the furnace is maintained between 55°F (13°C) and 80°F (27°C), with no evening setback or shutdown. The use of the furnace while the structure is under construction is deemed to be intermittent operation per our installation instructions.
- The air temperature rise is within the rated rise range on the furnace rating plate, and the gas input rate has been set to the nameplate value.
- The filters used to clean the circulating air during the construction process must be either changed or thoroughly cleaned prior to occupancy.
- The furnace, ductwork and filters are cleaned as necessary to remove drywall dust and construction debris from all HVAC system components after construction is completed.
- Verify proper furnace operating conditions including ignition, gas input rate, air temperature rise, and venting according to these installation instructions.

WARNING

CARBON MONOXIDE POISONING HAZARD

Failure to follow this warning could result in personal injury or death, and unit component damage.

Corrosive or contaminated air may cause failure of parts containing flue gas, which could leak into the living space. Air for combustion must not be contaminated by halogen compounds, which include fluoride, chloride, bromide, and iodide. These elements can corrode heat exchangers and shorten furnace life. Air contaminants are found in aerosol sprays, detergents, bleaches, cleaning solvents, salts, air fresheners, and other household products. Do not install furnace in a corrosive or contaminated atmosphere. Make sure all combustion and circulating air requirements are met, in addition to all local codes and ordinances.

CAUTION

FURNACE CORROSION HAZARD

Failure to follow this caution may result in furnace damage.

Air for combustion must not be contaminated by halogen compounds, which include fluoride, chloride, bromide, and iodide. These elements can corrode heat exchangers and shorten furnace life. Air contaminants are found in aerosol sprays, detergents, bleaches, cleaning solvents, salts, air fresheners, and other household products.

AIR FOR COMBUSTION AND VENTILATION

Provisions for adequate combustion, ventilation, and dilution air must be provided in accordance with:

- U.S. installations: Section 9.3 of the current edition of NFGC NFPA54/ANSI Z223.1, Air for Combustion and Ventilation, and applicable provisions of the local building codes.

WARNING

CARBON MONOXIDE POISONING HAZARD

Failure to follow this warning could result in personal injury or death.

The operation of exhaust fans, kitchen ventilation fans, clothes dryers, attic exhaust fans or fireplaces could create a NEGATIVE PRESSURE CONDITION at the furnace. Make-up air MUST be provided for the ventilation devices, in addition to that required by the furnace. Refer to Carbon Monoxide Poisoning Hazard warning in venting section of these instructions to determine if an adequate amount of make-up air is available.

The requirements for combustion and ventilation air depend upon whether or not the furnace is located in a space having a volume of at least 50 cubic feet per 1,000 BTUh input rating for all gas appliances installed in the space.

- Spaces having less than 50 cubic feet per 1,000 BTUh require the OUTDOOR COMBUSTION AIR METHOD.
- Spaces having at least 50 cubic feet per 1,000 BTUh may use the INDOOR COMBUSTION AIR, STANDARD or KNOWN AIR INFILTRATION METHOD.

Outdoor Combustion Air Method

1. Provide the space with sufficient air for proper combustion, ventilation, and dilution of flue gases using permanent horizontal or vertical duct(s) or opening(s) directly communicating with the outdoors or spaces that freely communicate with the outdoors.
2. Fig. 7 illustrates how to provide TWO OUTDOOR OPENINGS, one inlet and one outlet combustion and ventilation air opening, to the outdoors.
   a. One opening **MUST** commence within 12-in. (300 mm) of the ceiling and the second opening **MUST** commence within 12-in. (300 mm) of the floor.
   b. Size openings and ducts per Fig. 7 and Table 2.
   c. TWO HORIZONTAL DUCTS require 1 square inch of free area per 2,000 BTUh (1,100 mm2/kW) of combined input for all gas appliances in the space per Fig. 7 and Table 2.
   d. TWO OPENINGS OR VERTICAL DUCTS require 1 square inch of free area per 4,000 BTUh (550 mm2/kW) for combined input of all gas appliances in the space per Fig. 7 and Table 2.
3. ONE OUTDOOR OPENING requires:
   a. 1 square inch of free area per 3,000 BTUh (734 mm2/kW) for combined input of all gas appliances in the space per Table 2 and
   b. Not less than the sum of the areas of all vent connectors in the space.

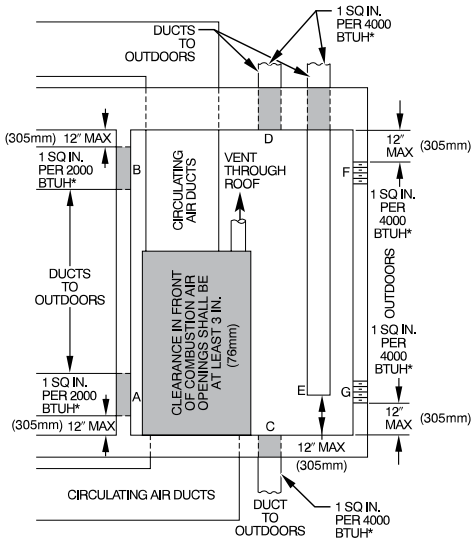

A03174

* Minimum dimensions of 3 in. (76 mm).

NOTE: Use any of the following combinations of openings: A&B, C&D, D&E, F&G

Fig. 7 – Air for Combustion, Ventilation, and Dilution for Outdoors

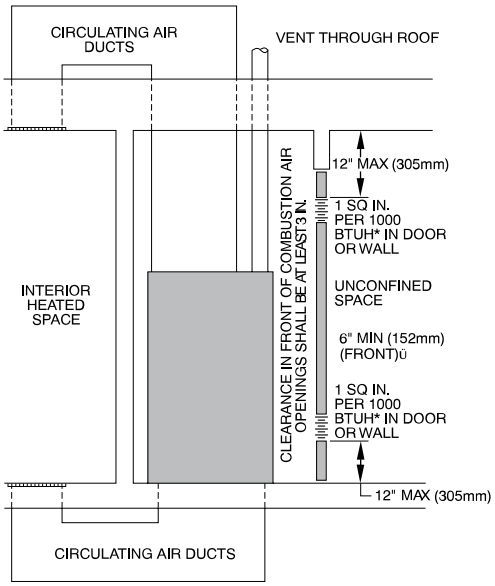

A03175

* Minimum opening size is 100 in.2 with minimum dimensions of 3 in. (76 mm).

* Minimum of 3 in. (76 mm), when type -B1 vent is used.

Fig. 8 – Air for Combustion, Ventilation, and Dilution from Indoors

The opening shall commence within 12” (300 mm) of the ceiling. Appliances in the space shall have clearances of at least 1” (25 mm) from the sides and back and 6” (150 mm) from the front. The opening shall directly communicate with the outdoors or shall communicate through a vertical or horizontal duct to the outdoors or spaces (crawl or attic) that freely communicate with the outdoors.

Indoor Combustion Air - NFPA & AGA Standard and Known-Air-Infiltration Rate Methods

Indoor air is permitted for combustion, ventilation, and dilution, if the **Standard** or **Known-Air-Infiltration** Method is used.

⚠ WARNING

CARBON MONOXIDE POISONING HAZARD

Failure to follow this warning could result in death and/or personal injury.

Many homes require air to be supplied from outdoors for furnace combustion, ventilation, and dilution of flue gases. The furnace combustion air supply must be provided in accordance with this instruction manual.

Table 2 – Minimum Free Area Required for Each Combustion Air Opening or Duct to Outdoors

FURNACE INPUT (BTUH)	TWO HORIZONTAL DUCTS (1 SQ. IN./2,000 BTUH) (1,100 SQ. MM/KW)		SINGLE DUCT OR OPENING (1 SQ. IN./3,000 BTUH) (734 SQ. MM/KW)		TWO OPENINGS OR VERTICAL DUCTS (1 SQ. IN./4,000 BTUH) (550 SQ. MM/KW)	
	Free Area of Opening and Duct (sq. in. / sq. mm)	Round Duct Diameter (in./mm)	Free Area of Opening and Duct (sq. In. / sq. mm)	Round Duct Diameter (in. / mm)	Free Area of Opening and Duct (sq. In. / sq. mm)	Round Duct Diameter (In./mm)
44,000	22 (14193)	6 (152)	14.7 (9484)	5 (127)	11 (7097)	4 (102)
66,000	33 (21290)	7 (178)	22 (14193)	6 (152)	16.5 (10645)	5 (127)
88,000	44 (28387)	8 (203)	29.3 (18903)	7 (178)	22 (14193)	6 (152)
110,000	55 (35484)	9 (229)	36.7 (23677)	7 (178)	27.5 (17742)	6 (152)
132,000	66 (42581)	10 (254)	44 (28387)	8 (203)	33 (21290)	7 (178)
154,000	77 (49677)	10 (254)	51.3 (33096)	9 (229)	38.5 (24839)	8 (203)

EXAMPLES: Determining Free Area

FURNACE		WATER HEATER		TOTAL INPUT		
110,000	+	30,000	=	(140,000 divided by 4,000)	=	35.0 Sq. In. for each two Vertical Ducts or Openings
66,000	+	40,000	=	(106,000 divided by 3,000)	=	35.3 Sq. In. for a Single Duct or Opening
88,000	+	30,000	=	(118,000 divided by 2,000)	=	59.0 Sq. In. for each of two Horizontal Ducts

Table 3 – Minimum Space Volumes for 100% Combustion, Ventilation, and Dilution from Indoors

ACH*	OTHER THAN FAN-ASSISTED TOTAL (1,000’S BTUH GAS INPUT RATE			FAN-ASSISTED TOTAL (1,000’S BTUH GAS INPUT RATE)				
	30	40	50	44	66	88	110	132
	Space Volume (ft.^{3})							
0.60	1,050	1,400	1,750	1,100	1,650	2,200	2,750	3,300
0.50	1,260	1,680	2,100	1,320	1,980	2,640	3,300	3,960
0.40	1,575	2,100	2,625	1,650	2,475	3,300	4,125	4,950
0.30	2,100	2,800	3,500	2,200	3,300	4,400	5,500	6,600
0.20	3,150	4,200	5,250	3,300	4,950	6,600	8,250	9,900
0.10	6,300	8,400	10,500	6,600	9,900	13,200	16,500	19,800
0.00	NP	NP	NP	NP	NP	NP	NP	NP

*. Air Changes/Hour

The Standard Method

Use the **Standard Method** if:

1. The space has no less volume than 50 cubic feet per 1,000 BTUh of the maximum input ratings for all gas appliances installed in the space and
2. The air infiltration rate is not known to be less than 0.40 air changes per hour (ACH).

Use the **Known Air Infiltration Rate Method** if the infiltration rate is known to be:

1. Less than 0.40 ACH and
2. Equal to or greater than 0.10 ACH

Infiltration rates greater than 0.60 ACH shall not be used. The minimum required volume of the space varies with the number of ACH and shall be determined per Table 3 or Equations 1 and 2. Determine the minimum required volume for each appliance in the space and add the volumes together to get the total minimum required volume for the space.

Table 3 - Minimum Space Volumes were determined by using the following equations from the current edition of National Fuel Gas Code ANSI Z223.1/NFPA 54:

1. For other than fan-assisted appliances, such as a draft hood-equipped water heater:

$$\text{Volume}_{\text{Other}} = \frac{21\,\text{ft}^3}{\text{ACH}}\left(\frac{I_{\text{other}}}{1000\ \text{Btu/hr}}\right)$$

A04002

2. For fan-assisted appliances such as this furnace:

$$\text{Volume}_{\text{Fan}} = \frac{15\,\text{ft}^3}{\text{ACH}}\left(\frac{I_{\text{fan}}}{1000\ \text{Btu/hr}}\right)$$

A04003

If the following is applied to either equation:

- I_{other} = combined input of all other than fan-assisted appliances in BTUh/hr
- I_{fan} = combined input of all fan-assisted appliances in BTUh/hr
- ACH = air changes per hour (ACH shall not exceed 0.60.)

The following requirements apply to the **Standard Method** and to the **Known Air Infiltration Rate Method**.

1. Adjoining rooms can be considered part of a space if:
   a. There are no closeable doors between rooms.
   b. Combining spaces on same floor level. Each opening shall have free area of at least 1 in.^{2}/1,000 BTUh (2,000 mm^2/kW) of the total input rating of all gas appliances in the space, but not less than 100 in.^{2} (0.06 m^2). One opening shall commence within 12" (300 mm) of the ceiling and the second opening shall commence within 12" (300 mm) of the floor. The minimum dimension of air openings shall be at least 3 in. (80 mm) (see Fig. 8).
   c. Combining space on different floor levels. The volumes of spaces on different floor levels shall be considered as communicating spaces if connected by one or more permanent openings in doors or floors having free area of at least 2 in.^{2}/1,000 BTUh (4,400 mm^2/kW) of total input rating of all gas appliances.
2. An attic or crawlspace may be considered a space that freely communicates with the outdoors provided there are adequate permanent ventilation openings directly to outdoors having free area of at least 1-in.^{2}/4,000 BTUh of total input rating for all gas appliances in the space.
3. In spaces that use the Indoor Combustion Air Method, infiltration should be adequate to provide air for combustion, permanent ventilation and dilution of flue gases. However, in buildings with unusually tight construction, additional air **MUST** be provided using the methods described in the Outdoor Combustion Air Method section.
4. Unusually tight construction is defined as construction with:
   a. Walls and ceilings exposed to the outdoors have a continuous, sealed vapor barrier. Openings are gasketed or sealed and
   b. Doors and openable windows are weatherstripped and
   c. Other openings are caulked or sealed. These include joints around window and door frames, between sole plates and floors, between wall-ceiling joints, between wall panels, at penetrations for plumbing, electrical and gas lines, etc.

Combination of Indoor and Outdoor Air

1. Indoor openings shall comply with the Indoor Combustion Air Method below and,
2. Outdoor openings shall be located as required in the Outdoor Combustion Air Method mentioned previously and,
3. Outdoor openings shall be sized as follows:
   a. Calculate the Ratio of all Indoor Space volume divided by required volume for Indoor Combustion Air Method below.
   b. Outdoor opening size reduction Factor is 1 minus the Ratio in a. above.
   c. Minimum size of Outdoor openings shall be the size required in Outdoor Combustion Air Method above multiplied by reduction Factor in b. above. The minimum dimension of air openings shall be not less than 3 in. (80 mm).

INSTALLATION

Upflow Installation

Bottom Return Air Inlet

These furnaces are shipped with bottom closure panel installed in bottom return-air opening. Remove and discard this panel when bottom return air is used. To remove bottom closure panel, perform the following:

1. Tilt or raise furnace and remove two screws holding bottom filler panel (see Fig. 9).
2. Rotate bottom filler panel downward to release holding tabs.
3. Remove bottom closure panel.
4. Reinstall bottom filler panel and screws.

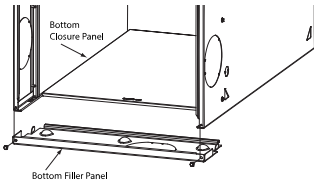

A10273

Fig. 9 – Removing Bottom Closure Panel

Side Return Air Inlet

These furnaces are shipped with bottom closure panel installed in bottom return-air opening. This panel MUST be in place when only side return air is used.

NOTE: Side return-air openings can be used in UPFLOW and most HORIZONTAL configurations. Do not use side return-air openings in DOWNFLOW configuration.

Leveling Legs (If Desired)

In upflow position with side return inlet(s), leveling legs may be used (see Fig. 10). Install field-supplied, 5/16 x 1-1/2 in. (8 x 38 mm) (max) corrosion-resistant machine bolts, washers and nuts.

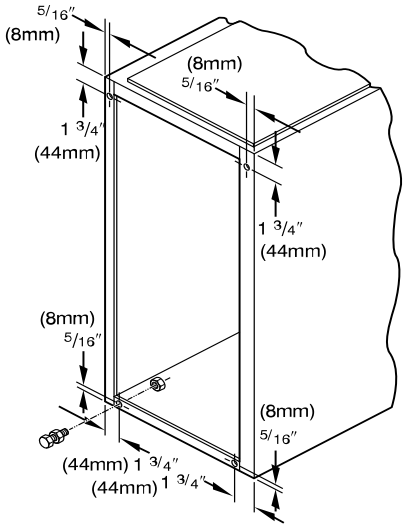

A89014

Fig. 10 – Leveling Legs

NOTE: Bottom closure must be used when leveling legs are used. It may be necessary to remove and reinstall bottom closure panel to install leveling legs. To remove bottom closure panel, see Item 1. in Bottom Return Air Inlet section.

To install leveling legs:

1. Position furnace on its back. Locate and drill a hole in each bottom corner of furnace (see Fig. 10).
2. For each leg, install nut on bolt and then install bolt and nut in hole. (Install flat washer if desired.)

3. Install another nut on other side of furnace base. (Install flat washer if desired.)
4. Adjust outside nut to provide desired height, and tighten inside nut to secure arrangement.
5. Reinstall bottom closure panel if removed.

Downflow Installation

CAUTION

EQUIPMENT OR PROPERTY DAMAGE

Failure to follow this caution could result in equipment or property damage

When furnace is installed in a downflow application, make sure water lines and other sources of water cannot drip or fail in such a way that water can collect on the blower motor, wiring, and furnace control board.

NOTE: For downflow applications, this furnace is approved for use on combustible flooring when any one of the following 3 accessories are used:

- Manufacturer's approved downflow combustible floor subbase
- Manufacturer's approved cased evaporator coil
- Manufacturer's approved evaporator coil casing

1. Determine application being installed from Table 4.
2. Construct hole in floor (see Table 4 and Fig. 11).
3. Construct plenum to dimensions specified (see Table 4 and Fig. 11).
4. If downflow subbase is used, install as shown in Fig. 12. If manufacturer's cased evaporator coil or coil casing is used, install as shown in see Fig. 13.

NOTE: It is required that the perforated supply-air duct flanges be completely folded over or removed from furnace when installing the furnace on a factory-supplied cased coil or coil box. To remove the supply-air duct flange, use wide duct pliers or hand seamers to bend flange back and forth until it breaks off. Be careful of sharp edges. Refer to Duct Flanges (Fig. 17) in the "Air Ducts" section.

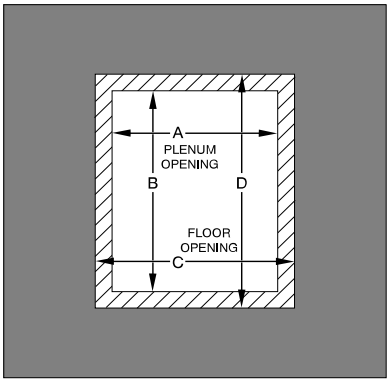

A96283

Fig. 11 – Floor and Plenum Opening Dimensions

Bottom Return Air Inlet

These furnaces are shipped with bottom closure panel installed in bottom return-air opening. Remove and discard this panel when bottom return air is used. To remove bottom closure panel, perform the following:

1. Tilt or raise furnace and remove two screws holding bottom filler panel (see Fig. 9).
2. Rotate bottom filler panel downward to release holding tabs.
3. Remove bottom closure panel.
4. Reinstall bottom filler panel and screws

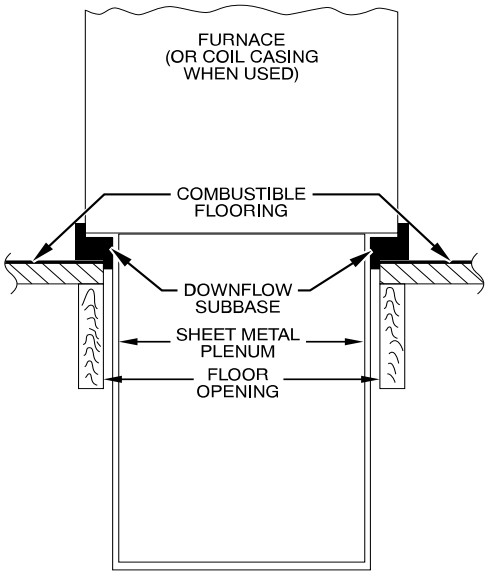

A96285

Fig. 12 – Furnace, Plenum, and Subbase Installed on a Combustible Floor

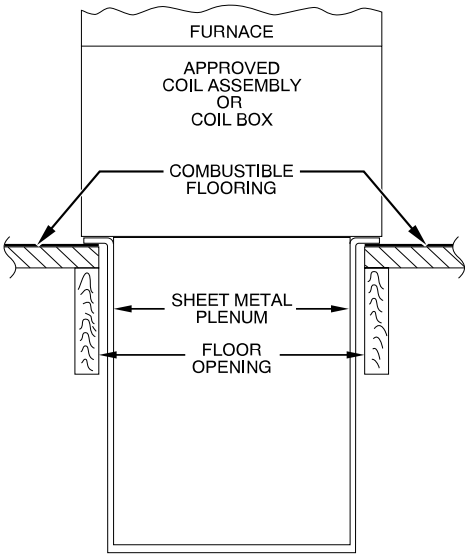

A08556

Fig. 13 – Furnace, Plenum, and Coil Assembly or Coil Box Installed on a Combustible Floor

Table 4 – Opening Dimensions - In. (mm)

FURNACE CASING WIDTH	APPLICATION	PLENUM OPENING		FLOOR OPENING	
		A	B	C	D
14–3/16 (360)	Upflow Applications on Combustible or Noncombustible Flooring (subbase not required)	12-11/16 (322)	21-5/8 (549)	13-5/16 (338)	22-1/4 (565)
	Downflow Applications on Noncombustible Flooring (subbase not required)	12-9/16 (319)	19 (483)	13-3/16 (335)	19-5/8 (498)
	Downflow Applications on Combustible Flooring (subbase required)	11-13/16 (284)	19 (483)	13-7/16 (341)	20-5/8 (600)
	Downflow Applications on Combustible Flooring with Cased Coil (subbase not required)	12-5/16 (319)	19 (483)	13-5/16 (338)	20 (508)
17–1/2 (445)	Upflow Applications on Combustible or Noncombustible Flooring (subbase not required)	16 (406)	21-5/8 (549)	16-5/8 (422)	22-1/4 (565)
	Downflow Applications on Noncombustible Flooring (subbase not required)	15-7/8 (403)	19 (483)	16-1/2 (419)	19-5/8 (498)
	Downflow Applications on Combustible Flooring (subbase required)	15-1/8 (384)	19 (483)	16-3/4 (425)	20-5/8 (600)
	Downflow Applications on Combustible Flooring with Cased Coil (subbase not required)	15-1/2 (394)	19 (483)	16-1/2 (419)	20 (508)
21 (533)	Upflow Applications on Combustible or Noncombustible Flooring (subbase not required)	19-1/2 (495)	21-5/8 (549)	20-1/8 (511)	22-1/4 (565)
	Downflow Applications on Noncombustible Flooring (subbase not required)	19-3/8 (492)	19 (483)	20 (508)	19-5/8 (498)
	Downflow Applications on Combustible Flooring (subbase required)	18-5/8 (473)	19 (483)	20-1/4 (514)	20-5/8 (600)
	Downflow Applications on Combustible Flooring with Cased Coil (subbase not required)	19 (483)	19 (483)	20 (508)	20 (508)
24-1/2 (622)	Upflow Applications on Combustible or Noncombustible Flooring (subbase not required)	23 (584)	21-1/8 (537)	23-5/8 (600)	22-1/4 (565)
	Downflow Applications on Noncombustible Flooring (subbase not required)	22-7/8 (581)	19 (483)	23-1/2 (597)	19-5/8 (498)
	Downflow Applications on Combustible flooring (subbase required)	22-1/8 (562)	19 (483)	23-3/4 (603)	20-5/8 (600)
	Downflow Applications on Combustible Flooring with Cased Coil (subbase not required)	22-1/2 (572)	19 (483)	23-1/2 (597)	20 (508)

⚠ WARNING

FIRE, EXPLOSION, AND CARBON MONOXIDE POISONING HAZARD

Failure to follow this warning could result in personal injury, death, and/or property damage.

Do not install the furnace on its back or hang furnace with control compartment facing downward. Safety control operation will be adversely affected. Never connect return-air ducts to the back of the furnace.

Horizontal Installation

The furnace can be installed horizontally in an attic or crawl space on either the left-hand (LH) or right-hand (RH) side. The furnace can be hung from floor joists, rafters or trusses or installed on a non-combustible platform, blocks, bricks or pad.

Suspended Furnace Support

The furnace may be supported under each end with threaded rod, angle iron or metal plumber's strap as shown (see Fig. 15 and Fig. 16). Secure angle iron to bottom of furnace as shown. Heavy-gauge sheet metal straps (plumber's straps) may be used to suspend the furnace from each bottom corner. To prevent screws from pulling out, use 2 #8 x 3/4-in. (19 mm) screws into the side and 2 #8 x 3/4-in. (19 mm) screws in the bottom of the furnace casing for each strap (see Fig. 15 and Fig. 16). If the screws are attached to ONLY the furnace sides and not the bottom, the straps must be vertical against the furnace sides and not pull away from the furnace sides, so that the strap attachment screws are not in tension (are loaded in shear) for reliable support.

Platform Furnace Support

Construct working platform at location where all required furnace clearances are met (see Fig. 2 and Fig. 14). For furnaces with 1-in. (25 mm) clearance requirement on side, set furnace on noncombustible blocks, bricks or angle iron. For crawl space installations, if the furnace is not suspended from the floor joists, the ground underneath furnace must be level and the furnace set on blocks or bricks.

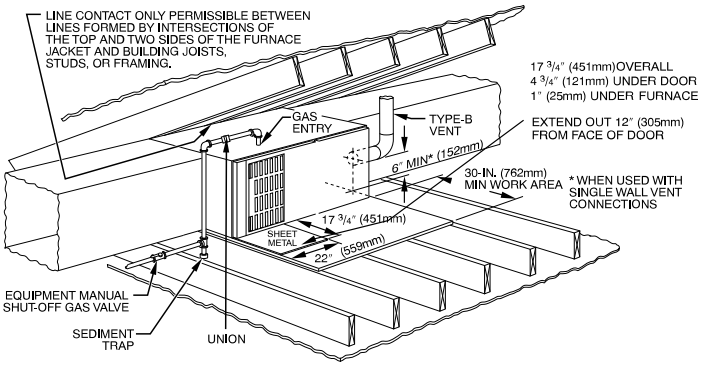

Fig. 14 – Typical Attic Installation

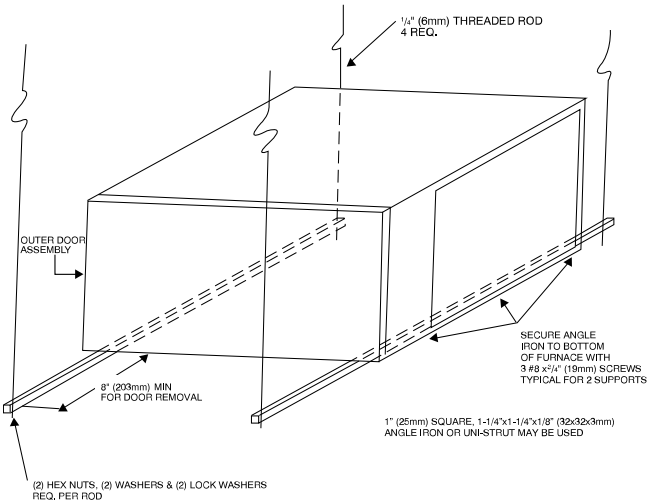

Fig. 15 – Horizontal Unit Suspension

Roll-Out Protection

Provide a minimum 17-3/4 in. x 22 in. (451 mm x 559 mm) piece of sheet metal for flame roll-out protection in front of burner area for furnaces closer than 12 inches (305 mm) above the combustible deck or suspended furnaces closer than 12 inches (305 mm) to joists. The sheet metal MUST extend underneath the furnace casing by 1 in. (25 mm) with the door removed.
The bottom closure panel on furnaces of widths 17-1/2 in. (445 mm) and larger may be used for flame roll-out protection when bottom of furnace is used for return air connection. See Fig. 14 for proper orientation of roll-out shield.

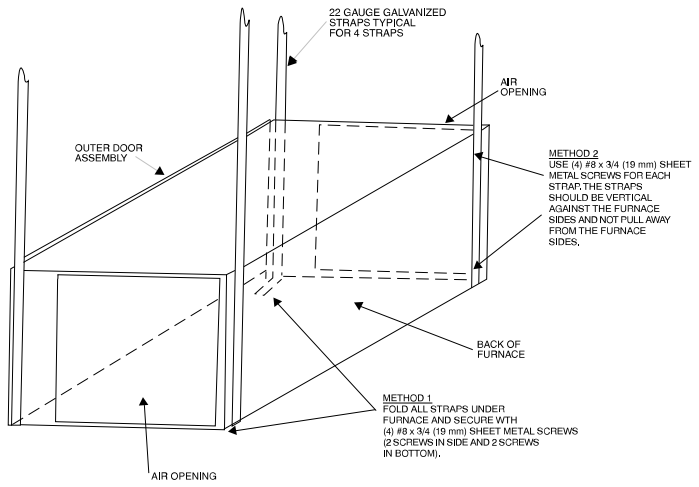

Fig. 16 – Horizontal Suspension with Straps

Bottom Return Air Inlet

These furnaces are shipped with bottom closure panel installed in bottom return-air opening. Remove and discard this panel when bottom return air is used. To remove bottom closure panel, perform the following:

1. Tilt or raise furnace and remove two screws holding bottom filler panel (see Fig. 9).
2. Rotate bottom filler panel downward to release holding tabs.
3. Remove bottom closure panel.
4. Reinstall bottom filler panel and screws. Side Return Air Inlet

Side Return Air Inlet

These furnaces are shipped with bottom closure panel installed in bottom return-air opening. This panel MUST be in place when side return air inlet(s) is used without a bottom return air inlet. Not all horizontal furnaces are approved for side return air connections (see Fig. 20).

FILTER ARRANGEMENT

⚠ WARNING

CARBON MONOXIDE AND POISONING HAZARD

Failure to follow this warning could result in personal injury, or death.

Never operate a furnace without a filter or with filter access door removed.

There are no provisions for an internal filter rack in these furnaces.

A field-supplied accessory external filter is required.

Refer to the instructions supplied with the external filter rack for assembly and installation options.

AIR DUCTS

General Requirements

The duct system should be designed and sized according to accepted national standards such as those published by: Air Conditioning Contractors Association (ACCA), Sheet Metal and Air Conditioning Contractors National Association (SMACNA) or American Society of Heating, Refrigerating and Air Conditioning Engineers (ASHRAE) or consult The Air Systems Design Guidelines reference tables available from your local distributor. The duct system should be sized to handle the required system design CFM at the design external static pressure. The furnace airflow rates are provided in Table 9-AIR DELIVERY-CFM (with filter).

When a furnace is installed so that the supply ducts carry air circulated by the furnace to areas outside the space containing the furnace, the return air shall also be handled by duct(s) sealed to the furnace casing and terminating outside the space containing the furnace. Secure ductwork with proper fasteners for type of ductwork used. Seal supply- and return-duct connections to furnace with code approved tape or duct sealer.

NOTE: Flexible connections should be used between ductwork and furnace to prevent transmission of vibration. Ductwork passing through unconditioned space should be insulated and sealed to enhance system performance. When air conditioning is used, a vapor barrier is recommended.

Maintain a 1-in. (25 mm) clearance from combustible materials to supply air ductwork for a distance of 36 in. (914 mm) horizontally from the furnace. See NFPA 90B or local code for further requirements.

Ductwork Acoustical Treatment

NOTE: Metal duct systems that do not have a 90 degree elbow and 10 ft. (3 M) of main duct to the first branch take-off may require internal acoustical lining. As an alternative, fibrous ductwork may be used if constructed and installed in accordance with the latest edition of SMACNA construction standard on fibrous glass ducts. Both acoustical lining and fibrous ductwork shall comply with NFPA 90B as tested by UL Standard 181 for Class 1 Rigid air ducts.

Supply Air Connections

For a furnace not equipped with a cooling coil, the outlet duct shall be provided with a removable access panel. This opening shall be accessible when the furnace is installed and shall be of such a size that the heat exchanger can be viewed for possible openings using light assistance or a probe can be inserted for sampling the airstream. The cover attachment shall prevent leaks.

Upflow and Horizontal Furnaces

Connect supply-air duct to flanges on furnace supply-air outlet. Bend flange upward to 90° with wide duct pliers (see Fig. 17). The supply-air duct must be connected to ONLY the furnace supply-outlet-air duct flanges or air conditioning coil casing (when used). DO NOT cut main furnace casing side to attach supply air duct, humidifier, or other accessories. All accessories **MUST** be connected to duct external to furnace main casing.

NOTE: For horizontal applications, the top-most flange may be bent past 90 degrees to allow the evaporator coil to hang on the flange temporarily while the remaining attachment and sealing of the coil are performed.

Downflow Furnaces

Connect supply-air duct to supply-air outlet on furnace. Bend flange inward past 90° with wide duct pliers (see Fig. 17). The supply-air duct must be connected to ONLY the furnace supply outlet or air conditioning coil casing (when used). When installed on combustible material, supply-air duct must be connected to ONLY the factory-approved accessory subbase or a factory- approved air conditioning coil casing. DO NOT cut main furnace casing to attach supply side air duct, humidifier, or other accessories. All accessories **MUST** be connected to duct external to furnace casing.

Return Air Connections

⚠ CAUTION

FIRE HAZARD

Failure to follow this warning could cause personal injury, death and/or property damage.

Never connect return-air ducts to the back of the furnace. Follow instructions below.

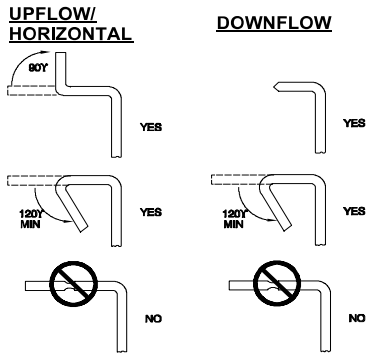

A190346

Fig. 17 – Duct Flanges

Downflow Furnaces

The return-air duct must be connected to return-air opening bottom inlet (see Fig. 1). DO NOT cut into casing sides (left or right). Side opening is permitted for only upflow and most horizontal furnaces (see Fig. 18). Bypass humidifier connections should be made at ductwork or coil casing sides exterior to furnace.

Upflow Furnaces

The return-air duct must be connected to bottom, sides (left or right), or a combination of bottom and side(s) of main furnace casing (see Fig. 19 and Fig. 20). Bypass humidifier may be attached into unused return air side of the furnace casing (see Fig. 19 and Fig. 20). Not all horizontal furnaces are approved for side return air connections (see Fig. 20).

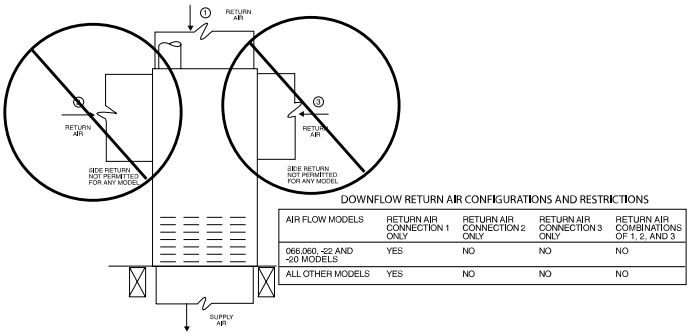

AIR FLOW MODELS	RETURN AIR CONNECTION 1 ONLY	RETURN AIR CONNECTION 2 ONLY	RETURN AIR CONNECTION 3 ONLY	RETURN AIR COMBINATIONS OF 1, 2, AND 3
066,060, -22 AND -20 MODELS	YES	NO	NO	NO
ALL OTHER MODELS	YES	NO	NO	NO

A02163

Fig. 18 – Downflow Return Air Configurations and Restrictions

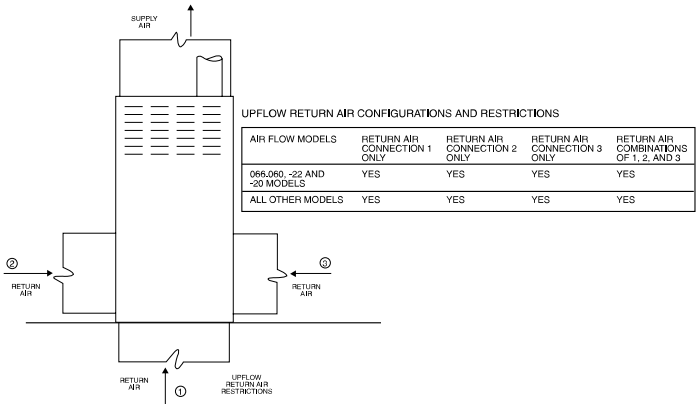

AIR FLOW MODELS	RETURN AIR CONNECTION 1 ONLY	RETURN AIR CONNECTION 2 ONLY	RETURN AIR CONNECTION 3 ONLY	RETURN AIR COMBINATIONS OF 1, 2, AND 3
066,060, -22 AND -20 MODELS	YES	YES	YES	YES
ALL OTHER MODELS	YES	YES	YES	YES

A02075

Fig. 19 – Upflow Return Air Configurations and Restrictions

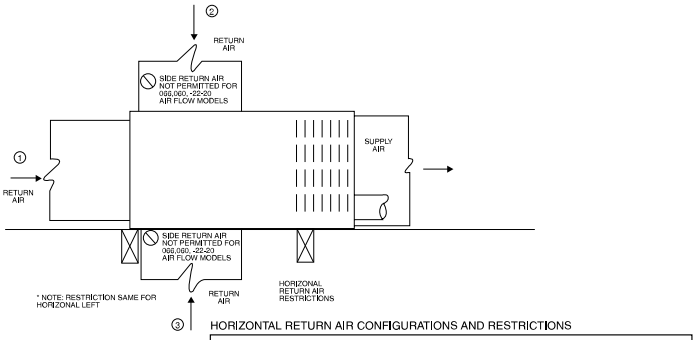

HORIZONTAL RETURN AIR CONFIGURATIONS AND RESTRICTIONS

AIR FLOW MODELS	RETURN AIR CONNECTION 1 ONLY	RETURN AIR CONNECTION 2 ONLY	RETURN AIR CONNECTION 3 ONLY	RETURN AIR COMBINATIONS OF 1, 2, AND 3
066,060, -22 AND -20 MODELS	YES	NO	NO	NO
ALL OTHER MODELS	YES	YES	YES	YES

A02162

Fig. 20 – Horizontal Return Air Configurations and Restrictions

GAS PIPING

Gas piping must be installed in accordance with national and local codes. Refer to current edition of NFGC.

Installations must be made in accordance with all authorities having jurisdiction. If possible, the gas supply line should be a separate line running directly from meter to furnace.

NOTE: In the state of Massachusetts:

1. Gas supply connections MUST be performed by a licensed plumber or gas fitter.
2. When flexible connectors are used, the maximum length shall not exceed 36 inches (915 mm).
3. When lever handle type manual equipment shutoff valves are used, they shall be T-handle valves.
4. The use of copper tubing for gas piping is NOT approved by the state of Massachusetts.

⚠ WARNING

FIRE OR EXPLOSION HAZARD

Failure to follow this warning could result in personal injury, death, and/or property damage.

Never purge a gas line into a combustion chamber. Never test for gas leaks with an open flame. Use a commercially available soap solution made specifically for the detection of leaks to check all connections.

⚠ WARNING

FIRE OR EXPLOSION HAZARD

Failure to follow this warning could result in personal injuriousness, and/or property damage.

Use proper length of pipe to avoid stress on gas control assembly and a gas leak.

⚠ WARNING

FIRE OR EXPLOSION HAZARD

Failure to follow this warning could result in personal injury, death, and/or property damage.

Gas valve inlet and/or inlet pipe must remain capped until gas supply line is permanently installed to protect the valve from moisture and debris. Also, install a sediment trap in the gas supply piping at the inlet to the gas valve.

Refer to Table 5 for recommended gas pipe sizing. Risers must be used to connect to furnace and to meter. Support all gas piping with appropriate straps, hangers, etc. Use a minimum of 1 hanger every 6 ft. (2 M). Joint compound (pipe dope) should be applied sparingly and only to male threads of joints. Pipe dope must be resistant to the action of propane gas.

Table 5 – Maximum Capacity of Pipe*

NOMINAL IRON PIPE	INTERNAL DIAMETER	LENGTH OF PIPE - FT. (M)				
SIZE IN. (mm)	In. (mm)	10	20	30	40	50
1/2 (13)	0.622 (16)	175 (53)	120 (37)	97 (30)	82 (25)	73 (22)
3/4 (19)	0.824 (21)	360 (110)	250 (76)	200 (61)	170 (52)	151 (46)
1 (25)	1.049 (27)	680 (207)	465 (142)	375 (114)	320 (98)	285 (87)
1-1/4 (32)	1.380 (35)	1400 (427)	950 (290)	770 (235)	660 (201)	580 (177)
1-1/2 (38)	1.610 (41)	2100 (640)	1460 (445)	1180 (360)	990 (301)	900 (274)

* Cubic ft. of natural gas per hr for gas pressures of 0.5 psig (14-in. w.c.) or less and a pressure drop of 0.5-in. w.c. (based on a 0.60 specific gravity gas). Ref: Chapter 6 current edition of ANSI Z223/NFPA 54.

⚠ WARNING

FIRE OR EXPLOSION HAZARD

Failure to follow this warning could result in personal injury, death, and/or property damage.

If local codes allow the use of a flexible gas appliance connector, always use a new listed connector. Do not use a connector which has previously served another gas appliance. Black iron pipe shall be installed at the furnace gas control valve and extend a minimum of 2 in.(51 mm) outside the furnace.

⚠ CAUTION

FURNACE OVERHEAT HAZARD

Failure to follow this caution may result in property damage.

Connect gas pipe to gas valve using a backup wrench to avoid damaging gas controls and burner misalignment.

An accessible manual equipment shutoff valve **MUST** be installed external to furnace casing and within 6 ft. (2 M) of furnace. A 1/8-in. (3 mm) NPT plugged tapping, accessible for test gauge connection, **MUST** be installed immediately upstream of gas supply connection to furnace and downstream of manual equipment shutoff valve.

NOTE: The furnace gas control valve inlet pressure tap connection is suitable to use as test gauge connection providing test pressure DOES NOT exceed maximum 0.5 psig (14-in. w.c.) stated on gas control valve (see Fig. 21).

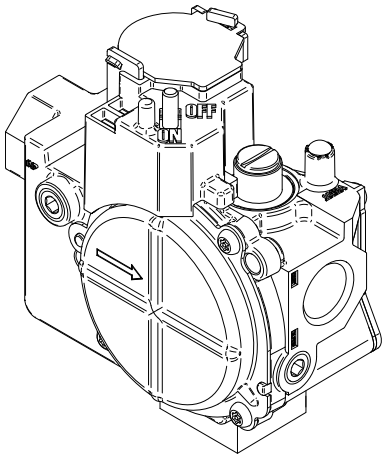

A06666

Fig. 21 – Gas Control Valve

Some installations require gas entry on right side of furnace (as viewed in upflow.) (See Fig. 22).

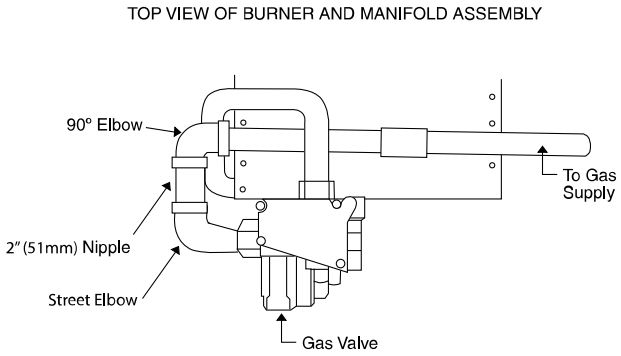

A08551

Fig. 22 – Burner and Manifold

Install a sediment trap in riser leading to furnace (see Fig. 23). Connect a capped nipple into lower end of tee. Capped nipple should extend below level of furnace gas controls. Place a ground joint union between furnace gas control valve and exterior manual equipment gas shutoff valve.

A 1/8-in. (3 mm) NPT plugged tapping, accessible for test gauge connection, MUST be installed immediately upstream of gas supply connection to furnace and downstream of manual equipment shutoff valve.

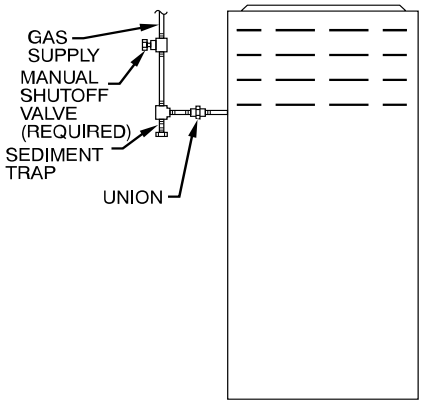

Fig. 23 – Typical Gas Pipe Arrangement

Piping should be pressure and leak tested in accordance with NFGC in the United States, local, and national plumbing and gas codes before the furnace has been connected. After all connections have been made, purge lines and check for leakage at furnace prior to operating furnace.

If pressure exceeds 0.5 psig (14-in. w.c.), gas supply pipe must be disconnected from furnace and capped before and during supply pipe pressure test. If test pressure is equal to or less than 0.5 psig (14-in. w.c.), turn off electric shutoff switch located on furnace gas control valve and accessible manual equipment shutoff valve before and during supply pipe pressure test. After all connections have been made, purge lines and check for leakage at furnace prior to operating furnace.

The gas supply pressure shall be within the maximum and minimum inlet supply pressures marked on the rating plate with the furnace burners ON and OFF.

ELECTRICAL CONNECTIONS

See Fig. 24 for field wiring diagram showing typical field 115-V wiring. Check all factory and field electrical connections for tightness.

Field-supplied wiring shall conform with the limitations of 63°F (35°C) rise.

WARNING

ELECTRICAL SHOCK, FIRE OR EXPLOSION HAZARD

Failure to follow safety warnings could result in dangerous operation, serious injury, death or property damage.

Improper servicing could result in dangerous operation, serious injury, death or property damage.

- Before servicing, disconnect all electrical power to furnace.
- When servicing controls, label all wires prior to disconnection. Reconnect wires correctly.
- Verify proper operation after servicing.
- Always reinstall access doors after completing service and maintenance.

WARNING

ELECTRICAL SHOCK HAZARD

Failure to follow this warning could result in personal injury or death.

Blower access panel door switch opens 115-V power to control. No component operation can occur. Do not bypass or close switch with panel removed.

WARNING

ELECTRICAL SHOCK AND FIRE HAZARD

Failure to follow this warning could result in personal injury, death, or property damage.

The cabinet MUST have an uninterrupted or unbroken ground according to current edition of NEC NFPA 70 or local codes to minimize personal injury if an electrical fault should occur. This may consist of electrical wire, conduit approved for electrical ground or a listed, grounded power cord (where permitted by local code) when installed in accordance with existing electrical codes. Refer to the power cord manufacturer's ratings for proper wire gauge. Do not use gas piping as an electrical ground.

CAUTION

FURNACE MAY NOT OPERATE

Failure to follow this caution may result in intermittent furnace operation.

Furnace control must be grounded for proper operation or else control will lock out. Control must remain grounded through green/yellow wire routed to gas valve and manifold bracket screw.

115-V Wiring

Verify that the voltage, frequency, and phase correspond to that specified on unit rating plate. Also, check to be sure that service provided by utility is sufficient to handle load imposed by this equipment. Refer to rating plate or Table 6 for equipment electrical specifications.

U.S. Installations: Make all electrical connections in accordance with National Electrical Code (NEC) NFPA 70 and any local codes or ordinances that might apply.

Use a separate, fused branch electrical circuit with a properly sized fuse or circuit breaker for this furnace. See Table 6 for wire size and fuse specifications. A readily accessible means of electrical disconnect must be located within sight of the furnace.

NOTE: Proper polarity must be maintained for 115-V wiring. If polarity is incorrect, control LED status indicator light will flash rapidly and Status code (10 . 1) is displayed. The furnace will NOT operate.

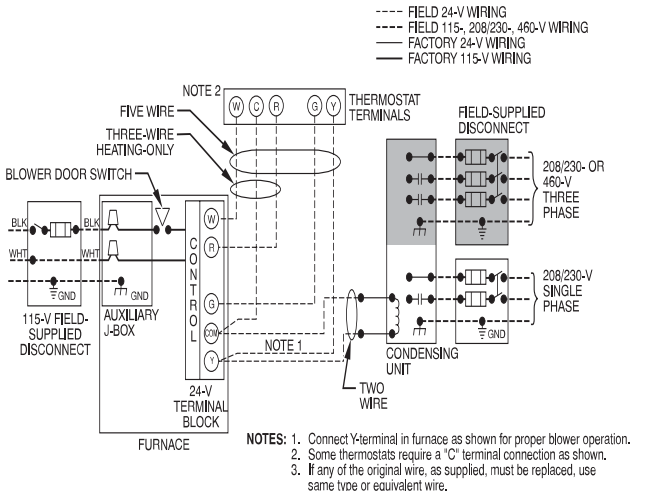

Fig. 24 – Heating and Cooling Application Wiring Diagram with 1-Stage Thermostat

Table 6 – Electrical Data

Unit Size	Volts-Hertz-Phase	Operating Voltage* Range		Maximum Unit Amps	Unit Ampacity†	Minimum Wire Size AWG	Maximum Wire Length‡ Ft. (M)	Maximum Fuse or CKT BKR Amps**
		Maximum	Minimum					
36045A	115-60-1	127	104	6.0	8.3	14	44 (13.6)	15
42045B	115-60-1	127	104	7.9	10.7	14	34 (10.6)	15
36070A	115-60-1	127	104	6.0	8.3	14	44 (13.6)	15
36070B	115-60-1	127	104	5.9	8.2	14	45 (13.8)	15
48070B	115-60-1	127	104	10.4	13.8	14	26 (8.2)	15
48070C	115-60-1	127	104	10.4	13.8	14	26 (8.2)	15
42090B	115-60-1	127	104	8.2	11.0	14	34 (10.3)	15
48090C	115-60-1	127	104	8.2	11.0	14	34 (10.3)	15
60090C	115-60-1	127	104	13.9	18.1	12	31 (9.6)	20
60110C	115-60-1	127	104	14.4	18.6	12	30 (9.4)	20
60110D	115-60-1	127	104	11.1	14.6	14	25 (7.7)	15
60135D	115-60-1	127	104	11.0	14.4	14	25 (7.8)	15
60155D	115-60-1	127	104	10.7	14.1	14	26 (8.0)	15

*. Permissible limits of the voltage range at which the unit operates satisfactorily.
†. Unit ampacity = 125 percent of largest operating component's full load amps plus 100 percent of all other potential operating components' (EAC, humidifier, etc.) full load amps.
‡. Length shown is as measured one way along wire path between unit and service panel for maximum 2 percent voltage drop.
**. Time-delay type is recommended.

WARNING

FIRE HAZARD

Failure to follow this warning could result in personal injury, death, or property damage.

Do not connect aluminum wire between disconnect switch and furnace. Use only copper wire (see Fig. 25).

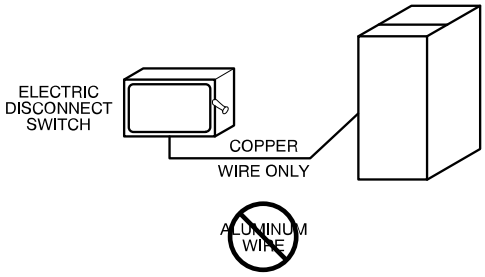

A190279

Fig. 25 – Field-Supplied External Electrical Box on Furnace Casing

J-BOX RELOCATION

NOTE: If factory location of J-Box is acceptable, go to next section (ELECTRICAL CONNECTION TO J-BOX).

NOTE: On 14-in. (356 mm) wide casing models, the J-Box shall not be relocated to other side of furnace casing when the vent pipe is routed within the casing.

1. Remove and save two screws holding J-Box.

NOTE: The J-Box cover need not be removed from the J-Box in order to move the J-Box. Do NOT remove green ground screw inside J-Box (see Fig. 26).

2. Cut wire tie on loop in furnace wires attached to J-box.
3. Move J-Box to desired location.
4. Fasten J-Box to casing with two screws removed in Step 1.
5. Route J-Box wires within furnace away from sharp edges, rotating parts and hot surfaces.

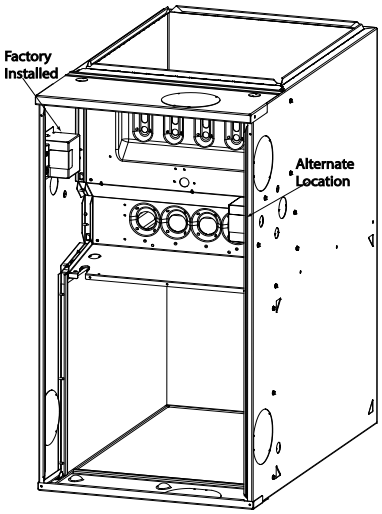

A10291

Fig. 26 – Relocating J-Box

Electrical Connection to J-Box Electrical Box on Furnace Casing Side

WARNING

FIRE OR ELECTRICAL SHOCK HAZARD

Failure to follow this warning could result in personal injury, death, or property damage.

High voltage field connections must be located in J-Box with furnace, or in field supplied external disconnect mounted to furnace.

If field-supplied manual disconnect switch is to be mounted on furnace casing side, select a location where a drill or fastener cannot damage electrical or gas components.

1. Refer to Fig. 27 when installing an electrical box.
2. Select and remove a hole knockout in the casing where the electrical box is to be installed.

NOTE: Check that duct on side of furnace will not interfere with installed electrical box.

3. Remove the desired electrical box hole knockout and position the hole in the electrical box over the hole in the furnace casing.

4. Fasten the electrical box to casing by driving two field supplied screws from inside electrical box into casing steel.

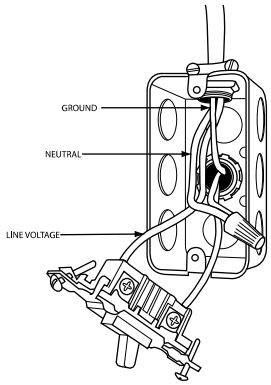

A190278

Fig. 27 – Field-Supplied Electrical Box on Furnace Casing

5. Remove and save two screws holding J-Box.
6. Pull furnace power wires out of 1/2-in. (12 mm) diameter hole in J-Box. Do not loosen wires from strain-relief wire-tie on outside of J-Box.
7. Route furnace power wires through holes in casing and electrical box and into electrical box.
8. Pull field power wires into electrical box.
9. Remove cover from furnace J-Box.
10. Route field ground wire through holes in electrical box and casing, and into furnace J-Box.
11. Reattach furnace J-Box to furnace casing with screws removed in Step 4.
12. Secure field ground wire to J-Box green ground screw.
13. Complete electrical box wiring and installation. Connect line voltage leads (see Fig. 24). Use best practices (NEC in U.S. for wire bushings, strain relief, etc.)
14. Reinstall cover to J-Box. Do not pinch wires between cover and bracket.

Power Cord Installation in Furnace J-Box

NOTE: Power cords must be able to handle the electrical requirements listed in Table 6. Refer to power cord manufacturer's listings.

1. Remove cover from J-Box.
2. Route listed power cord through 7/8-in. (22 mm) diameter hole in J-Box.
3. Secure power cord to J-Box bracket with a strain relief bushing or a connector approved for the type of cord used.
4. Secure field ground wire to green ground screw on J-Box bracket.
5. Connect line voltage leads (see Fig. 24).
6. Reinstall cover to J-Box. Do not pinch wires between cover and bracket.

BX Cable Installation in Furnace J-Box

1. Remove cover from J-Box.
2. Route BX cable into 7/8-inch diameter hole in J-Box.
3. Secure BX cable to J-Box bracket with connectors approved for the type of cable used.
4. Secure field ground wire to green ground screw on J-Box bracket.
5. Connect line voltage leads (see Fig. 24).
6. Reinstall cover to J-Box. Do not pinch wires between cover and bracket.

24-V Wiring

Make field 24-V connections at the 24-V terminal strip (see Fig. 20). Connect terminal Y for proper cooling operation (see Fig. 28). Use only AWG No. 18, color-coded, copper thermostat wire.

The 24-V circuit contains an automotive-type, 3-amp. fuse located on the control. Any direct shorts during installation, service, or maintenance could cause this fuse to blow. If fuse replacement is required, use ONLY a 3-amp. fuse of identical size.

ACCESSORIES

1. Electronic Air Cleaner (EAC)
   Connect an accessory Electronic Air Cleaner (if used) using 1/4-in female quick connect terminals to the two male 1/4-in quick-connect terminals on the control board marked EAC-1 and EAC-2. The terminals are rated for 115 VAC, 1.0 amps maximum and are energized during blower motor operation (see Fig. 28).
2. Humidifier (HUM)
   Connect an accessory 24 VAC, 0.5 amp. maximum humidifier (if used) to the 1/4-in male quick-connect HUM terminal and COM-24V screw terminal on the control board thermostat strip. The HUM terminal is energized when the pressure switch closes during a call for heat (see Fig. 28).

NOTE: DO NOT connect furnace control HUM terminal to HUM (humidifier) terminal on humidity sensing thermostat, zone controller or similar device. See humidity sensing thermostat, zone controller, thermostat, or controller manufacturer's instructions for proper connection.

NOTE: For 24-V & 115-V EAC or Humidifier Accessory details, see Accessory instructions.

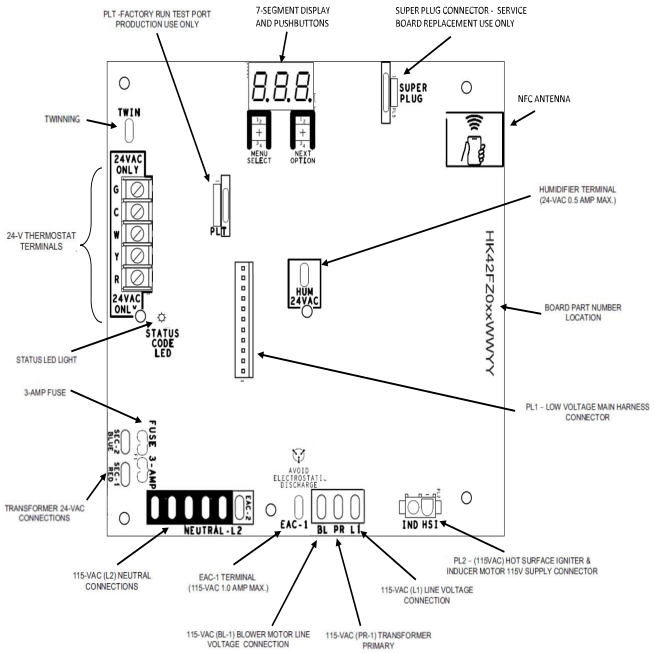

A210192

Fig. 28 – Furnace Control

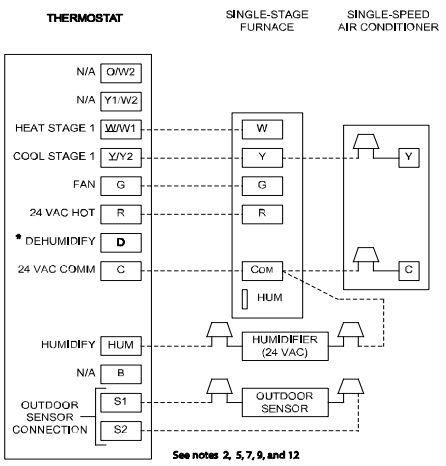

Single-Stage Furnace with Single-Speed Air Conditioner

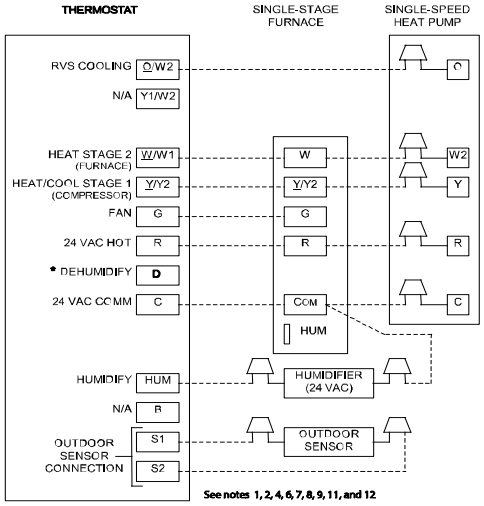

Single-Stage Furnace with Single-Speed Heat Pump

A200134

Fig. 29 – Thermostat Wiring Diagrams

Notes for thermostat wiring diagrams

1. Heat pump MUST have a high pressure switch for HYBRID HEAT® dual fuel applications.
2. Refer to outdoor equipment Installation Instructions for additional information and setup procedure.
3. If the heat pump date code is 1501E or earlier, select the “ZONE” position on the two speed heat pump control. Heat pumps with date code 1601E and later do not have or require a “ZONE” selection.
4. Outdoor Air Temperature Sensor must be attached in all HYBRID HEAT® dual fuel applications.
5. Configure the thermostat for air conditioner, installations. Refer to thermostat instructions.
6. Configure the thermostat for heat pump installations. Refer to thermostat instructions.
7. Configure the thermostat for single-stage compressor installations. Refer to thermostat instructions.
8. Configure the thermostat for HYBRID HEAT® dual fuel operation installations. Refer to thermostat instructions.
9. NO connection should be made to the furnace HUM terminal when using a thermostat with a 24 volt humidifier output.
10. When connecting humidifier with its own 115 VAC supply use isolation relay between furnace and humidifier.
11. If thermostat has internal control of heat pump balance point, DO NOT SELECT the “FURNACE INTERFACE” or “BALANCE POINT” option on the two-speed heat pump control board. Refer to thermostat instructions.
12. Thermostat signals may vary. Consult thermostat installation instructions for more information.

VENTING

The furnace shall be connected to a listed factory built chimney or vent, or a clay-tile lined masonry or concrete chimney. Venting into an unlined masonry chimney or concrete chimney is prohibited.

When an existing Category I furnace is removed or replaced, the original venting system may no longer be sized to properly vent the attached appliances. An improperly sized Category I venting system could cause the formation of condensate in the furnace and vent, leakage of condensate and combustion products, and spillage of combustion products into the living space.

Vent system or vent connectors may need to be resized. Vent systems or vent connectors, must be sized to approach minimum size as determined using appropriate table found in the NFGC.

General Venting Requirements

Follow all safety codes for proper vent sizing and installation requirements, including local building codes, the current edition of National Fuel Gas Code ANSI Z223.1/NFPA 54 (NFGC), Parts 12 and 13, the local building codes, and furnace and vent manufacturers’ instructions.

These furnaces are design-certified as Category I furnaces in accordance with current edition of ANSI Z21.47/CSA 2.3 and operate with a non-positive vent static pressure to minimize the potential for vent gas leakage. Category I furnaces operate with a flue loss not less than 17 percent to minimize the potential for condensation in the venting system. These furnaces are approved for common venting and multistory venting with other fan assisted or draft hood equipped appliances in accordance with the NFGC, the local building codes, and furnace and vent manufacturers’ instructions.

The following information and warning must be considered in addition to the requirements defined in the NFGC.

1. If a vent (common or dedicated) becomes blocked, the furnace will be shut off by the draft safeguard switch located on the vent elbow.
2. Do not vent this Category I furnace into a single-wall dedicated or common vent. The dedicated or common vent is considered to be the vertical portion of the vent system that terminates outdoors.
3. Vent connectors serving Category I furnaces shall not be connected into any portion of a mechanical draft system operating under positive pressure.
4. Do not vent this appliance with any solid fuel burning appliance.
5. Category I furnaces must be vented vertically or nearly vertically unless equipped with a listed power venter.
6. Do not vent this appliance into an unlined masonry chimney. (Refer to Chimney Inspection Chart, Fig. 30).

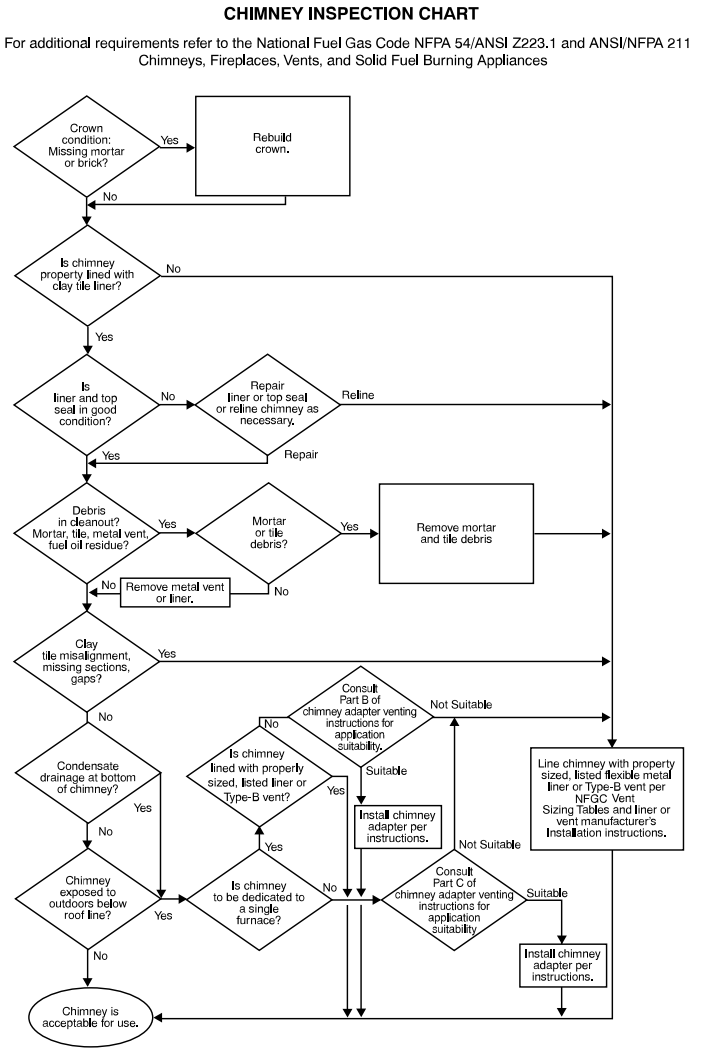

Fig. 30 – Chimney Inspection Chart

Masonry Chimney Requirements

NOTE: These furnaces are CSA design-certified for use in exterior tile-lined masonry chimneys with a factory accessory Chimney Adapter Kit. Refer to the furnace rating plate for correct kit usage. The Chimney Adapter Kits are for use with ONLY furnaces having a Chimney Adapter Kit numbers marked on the furnace rating plate.

If a clay tile-lined masonry chimney is being used and it is exposed to the outdoors below the roof line, relining might be required. Chimneys shall conform to the Standard for Chimneys, Fireplaces, Vents, and Solid Fuel Burning Appliances current edition of ANSI/NFPA 211 and must be in good condition.

U.S.A.— Refer to Sections 13.1.8 and 13.2.20 of the current edition of NFGC NFPA54/ANSI Z223.1 or the authority having jurisdiction to determine whether relining is required. If relining is required, use a properly sized listed metal liner, Type-B vent, or a listed alternative venting design.

NOTE: See the current edition of NFPA54/ANSI Z223.1, 13.1.8 and 13.2.20 regarding alternative venting design and the Exception, which cover installations such as the Chimney Adapter Kits, which are listed for use with these furnaces. See Product Data Sheet for accessory listing.

⚠ WARNING

CARBON MONOXIDE POISONING HAZARD

Failure to follow the steps outlined below for each appliance connected to the venting system being placed into operation could result in carbon monoxide poisoning or death.

The following steps shall be followed for each appliance connected to the venting system being placed into operation, while all other appliances connected to the venting system are not in operation:

- Seal any unused openings in venting system.
- Inspect the venting system for proper size and horizontal pitch, as required in the current edition of National Fuel Gas Code, ANSI Z223.1/NFPA 54 and these instructions. Determine that there is no blockage or restriction, leakage, corrosion and other deficiencies, which could cause an unsafe condition.
- As far as practical, close all building doors and windows and all doors between the space in which the appliance(s) connected to the venting system are located and other spaces of the building.
- Close fireplace dampers.
- Turn on clothes dryers and any appliance not connected to the venting system. Turn on any exhaust fans, such as range hoods and bathroom exhausts, so they are operating at maximum speed. Do not operate a summer exhaust fan.
- Follow the lighting instructions. Place the appliance being inspected into operation. Adjust the thermostat so appliance is operating continuously.
- Test for spillage from draft hood equipped appliances at the draft hood relief opening after 5 minutes of main burner operation. Use the flame of a match or candle.
- If improper venting is observed during any of the above tests, the venting system must be corrected in accordance with the current edition of National Fuel Gas Code, ANSI Z223.1/NFPA 54.
- After it has been determined that each appliance connected to the venting system properly vents when tested as outlined above, return doors, windows, exhaust fans, fireplace dampers and any other gas-fired burning appliance to their previous conditions of use.

The Chimney Adapter Kit is listed alternative venting system for these furnaces. See the kit instructions for complete details.

This furnace is permitted to be vented into a clay tile-lined masonry chimney that is exposed to the outdoors below the roof line, provided:

1. Vent connector is Type-B double-wall, and
2. This furnace is common vented with at least 1 draft hood equipped appliance, and
3. The combined appliance input rating is less than the maximum capacity given in Table 7, and
4. The input rating of each space heating appliance is greater than the minimum input rating given in Table 8 for the local 99% Winter Design Temperature. Chimneys having internal areas greater than 38 square inches require furnace input ratings greater than the input ratings of these furnaces. See footnote at bottom of Table 8, and
5. The authority having jurisdiction approves.

Exterior Masonry Chimney FAN + NAT Installations with Type-B Double Wall Vent Connectors© NFPA & AGA

Table 7 – Combined Appliance Maximum Input Rating in Thousands of BTUh per Hour

VENT HEIGHT FT. (M)	INTERNAL AREA OF CHIMNEY IN^2 (MM^2)			
	12 (7741)	19 (12258)	28 (18064)	38 (24516)
6 (1.8)	74	119	178	257
8 (2.4)	80	130	193	279
10 (3.0)	84	138	207	299
15 (4.5)	NR	152	233	334
20 (6.0)	NR	NR	250	368
30 (9.1)	NR	NR	NR	404

If all of these conditions cannot be met, an alternative venting design shall be used, such as the listed chimney adapter kit with these furnaces, which are listed for use with the kit, a listed chimney-lining system, or a Type-B common vent.

Table 8 – Minimum Allowable Input Rating of Space-Heating Appliance in Thousands of BTUh per Hour

VENT HEIGHT FT (M)	INTERNAL AREA OF CHIMNEY IN^2. (MM^2)			
	12 (7741)	19 (12258)	28 (18064)	38 (24516)
Local 99% Winter Design Temperature: 17 to 26°F (-8 to -3°C)				
6 (1.8)	0	55	99	141
8 (2.4)	52	74	111	154
10 (3.0)	NR	90	125	169
15 (4.6)	NR	NR	167	212
20 (6.1)	NR	NR	212	258
30 (9.1)	NR	NR	NR	362
Local 99% Winter Design Temperature: 5 to 16°F* (-15 to -9°C)				
6 (1.8)	NR	78	121	166
8 (2.4)	NR	94	135	182
10 (3.0)	NR	111	149	198
15 (4.6)	NR	NR	193	247
20 (6.1)	NR	NR	NR	293
30 (9.1)	NR	NR	NR	377
Local 99% Winter Design Temperature: -10 to 4°F* (-23 to -16°C)				
6 (1.8)	NR	NR	145	196
8 (2.4)	NR	NR	159	213
10 (3.0)	NR	NR	175	231
15 (4.6)	NR	NR	NR	283
20 (6.1)	NR	NR	NR	333
30 (9.1)	NR	NR	NR	NR
Local 99% Winter Design Temperature: -11°F (-24°C) or lower				
Not recommended for any vent configuration.				

* The 99.6% heating db temperatures found in the 1997 or 2001 ASHRAE Fundamentals Handbook, Climatic Design Information chapter, Table 1A (United States) or the 2005 ASHRAE Fundamentals handbook, Climatic Design Information chapter, and the CD-ROM included with the 2005 ASHRAE Fundamentals Handbook.

Inspections before the sale and at the time of installation will determine the acceptability of the chimney or the need for repair and/or (re)lining. Refer to the Fig. 30 to perform a chimney inspection. If the inspection of a previously used tile-lined chimney:

a. Shows signs of vent gas condensation, the chimney should be relined in accordance with local codes and the authority having jurisdiction. The chimney should be relined with a listed metal liner, Type-B vent, or a listed chimney adapter kit shall be used to reduce condensation. If a condensate drain is required by local code, refer to the current edition of NFGC NFPA54/ANSI Z223.1, Section 12.10 for additional information on condensate drains.
b. Indicates the chimney exceeds the maximum permissible size in the tables, the chimney should be rebuilt or relined to conform to the requirements of the equipment being installed and the authority having jurisdiction.

A chimney without a clay tile liner, which is otherwise in good condition, shall be rebuilt to conform to current edition of ANSI/NFPA 211 or be lined with a UL listed metal liner or UL listed Type-B vent. Relining with a listed metal liner or Type-B vent is considered to be a vent-in-a-chase.

If a metal liner or Type-B vent is used to line a chimney, no other appliance shall be vented into the annular space between the chimney and the metal liner.

Appliance Application Requirements

Appliance operation has a significant impact on the performance of the venting system. If the appliances are sized, installed, adjusted, and operated properly, the venting system and/or the appliances should not suffer from condensation and corrosion. The venting system and all appliances shall be installed in accordance with applicable listings, standards, and codes.

The furnace should be sized to provide 100 percent of the design heating load requirement plus any margin that occurs because of furnace model size capacity increments. Heating load estimates can be made using approved methods available from Air Conditioning Contractors of America (Manual J); American Society of Heating, Refrigerating, and Air-Conditioning Engineers; or other approved engineering methods. Excessive oversizing of the furnace could cause the furnace and/or vent to fail prematurely. When a metal vent or metal liner is used, the vent must be in good condition and be installed in accordance with the vent manufacturer's instructions.

To prevent condensation in the furnace and vent system, the following precautions must be observed:

1. The return-air temperature must be at least 60°F (16°C)db except for brief periods of time during warm-up from setback at no lower than 55°F (13°C) db or during initial start-up from a standby condition.
2. Adjust the gas input rate per the installation instructions. Low gas input rate causes low vent gas temperatures, causing condensation and corrosion in the furnace and/or venting system. Derating is permitted only for altitudes above 2000 ft. (610 M).
3. Adjust the air temperature rise to the midpoint of the rise range or slightly above. Low air temperature rise can cause low vent gas temperature and potential for condensation problems.
4. Set the thermostat heat anticipator or cycle rate to reduce short cycling.

⚠ CAUTION

BURN HAZARD

Failure to follow this caution may cause personal injury.

Hot vent pipe is within reach of small children when installed in downflow position. See the following instruction.

Air for combustion must not be contaminated by halogen compounds which include chlorides, fluorides, bromides, and iodides. These compounds are found in many common home products such as

detergent, paint, glue, aerosol spray, bleach, cleaning solvent, salt, and air freshener, and can cause corrosion of furnaces and vents. Avoid using such products in the combustion-air supply. Furnace use during construction of the building could cause the furnace to be exposed to halogen compounds, causing premature failure of the furnace or venting system due to corrosion.

Vent dampers on any appliance connected to the common vent can cause condensation and corrosion in the venting system. Do not use vent dampers on appliances common vented with this furnace.

Additional Venting Requirements

A 4” (101 mm) round vent elbow is supplied with the furnace. A 5-inch (127 mm) or 6- inch (152 mm) vent connector may be required for some model furnaces. A field-supplied 4-inch-to-5-inch (101 - 127 mm) or 4-inch-to-6-inch (101 - 152 mm) sheet metal increaser fitting is required when 5-inch (127 mm) or 6-inch (152 mm) vent connector is used. See Fig. 31 - Fig. 43 Venting Orientation for approved vent configurations.

NOTE: Vent connector length for connector sizing starts at furnace vent elbow. The 4-inch vent elbow is shipped for upflow configuration and may be rotated for other positions. Remove the 3 screws that secure vent elbow to furnace, rotate furnace vent elbow to position desired, reinstall screws. The factory-supplied vent elbow does NOT count as part of the number of vent connector elbows.

⚠ CAUTION

CUT HAZARD

Failure to follow this caution may result in personal injury.

Sheet metal parts may have sharp edges or burrs. Use care and wear appropriate protective clothing, safety glasses and gloves when handling parts and servicing furnaces.

The vent connector can exit the furnace through one of 5 locations on the casing.

1. Attach the single wall vent connector to the furnace vent elbow, and fasten the vent connector to the vent elbow with at least two field-supplied, corrosion-resistant, sheet metal screws located 180° apart.

NOTE: An accessory flue extension is available to extend from the furnace elbow to outside the furnace casing. See Product Data Sheet for accessory listing. If flue extension is used, fasten the flue extension to the vent elbow with at least two field-supplied, corrosion-resistant, sheet metal screws located 180° apart. Fasten the vent connector to the flue extension with at least two field-supplied, corrosion resistant sheet metal screws located 180° apart.

2. Vent the furnace with the appropriate connector (see Fig. 31 - Fig. 43).
3. Determine the correct location of the knockout to be removed.
4. Use a hammer and screwdriver to strike a sharp blow between the tie points and work the slug back and forth until the slug breaks free.

An accessory Vent Guard Kit is REQUIRED for downflow applications where the vent exits through the lower portion of the furnace casing. See Fig. 35 and Product Data Sheet for accessory listing. Refer to the Vent Guard Kit Instructions for complete details.

The horizontal portion of the venting system shall slope upwards not less than 1/4-in. per linear ft. (21 mm/M) from the furnace to the vent and shall be rigidly supported every 5 ft. (2 M) or less with metal hangers or straps to ensure there is no movement after installation.

Sidewall Venting

This furnace is not approved for direct sidewall horizontal venting.

Per section 12.4.3 of the current edition of NFPA54/ANSI Z223.1, any listed mechanical venter may be used, when approved by the authority having jurisdiction.

Select the listed mechanical venter to match the BTUh input of the furnace being vented. Follow all manufacturer’s installation requirements for venting and termination included with the listed mechanical venter.

Caution!! For the following applications, use the minimum vertical vent heights as specified below.
For all other applications, follow exclusively the National Fuel Gas Code.

FURNACE ORIENTATION	VENT ORIENTATION	FURNACE INPUT (BTUH/HR)	MIN. VENT DIAMETER IN. (mm)*	MIN. VERTICAL VENT HEIGHT FT. (M)†
Downflow	Vent elbow left, then up Fig. 35	154,000 132,000 110,000	5 (127)	12 (3.6)
Horizontal Left	Vent elbow right, then up Fig. 43	154,000 132,000	5 (127)	7 (2.1)
Horizontal Left	Vent Elbow up Fig. 41	154,000 132,000	5 (127)	7 (2.1)
Horizontal Left	Vent elbow right Fig. 40	154,000	5 (127)	7 (2.1)
Downflow	Vent elbow up then left Fig. 31	110,000	5 (127)	10 (3.0)
Downflow	Vent elbow up, then right Fig. 38	110,000	5 (127)	10 (3.0)

*. 4 in. (102 mm) inside casing or vent guard
†. Including 4 in. (102 mm) vent section(s)

NOTE: All vent configurations must also meet National Fuel Gas Code venting requirements NFGC

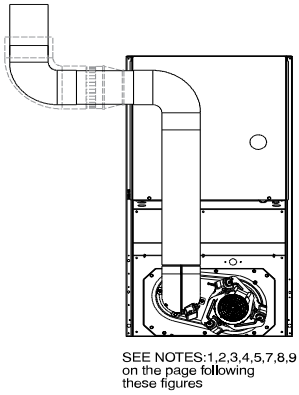

Fig. 31 – Downflow Application-Vent Elbow Up then Left A03210

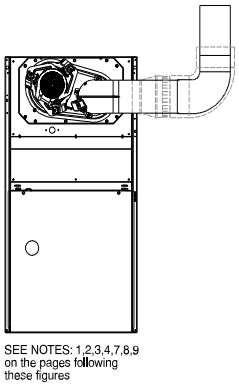

Fig. 32 – Upflow Application-Vent Elbow Right A03209

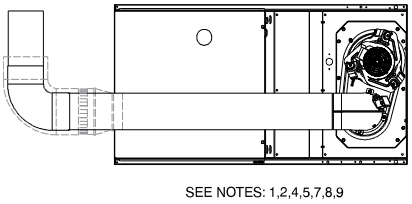

Fig. 33 – Horizontal Right Application-Vent Elbow Left A02068

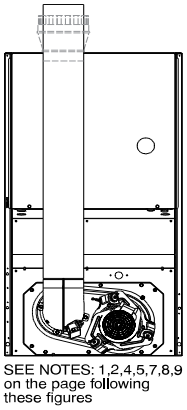

Fig. 34 – Downflow Application-Vent Elbow Up A03211

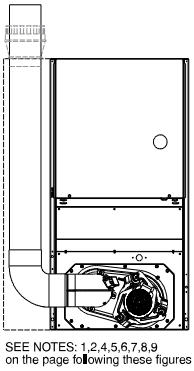

Fig. 35 – Downflow Application-Vent Elbow Left then Up A03207

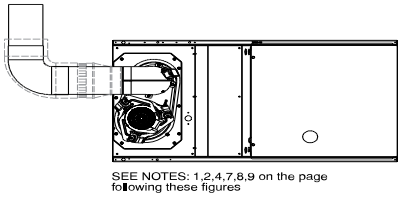

Fig. 36 – Horizontal Left Application-Vent Elbow Left A03213

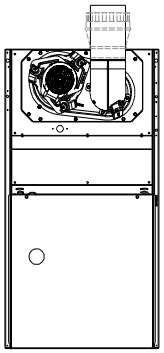

Fig. 37 – Upflow Application-Vent Elbow Up A03208

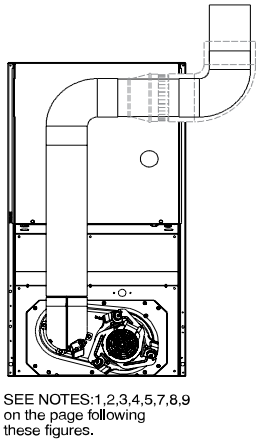

Fig. 38 – Downflow Application-Vent Elbow Up then Right A03212

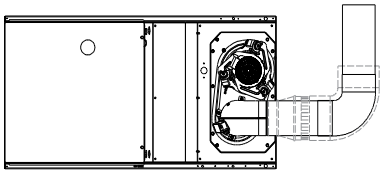

A03218

Fig. 39 – Horizontal Right Application-Vent Elbow Right

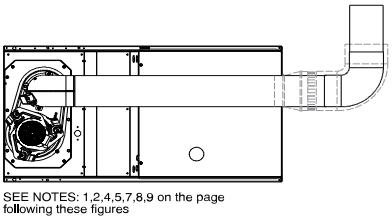

A03216

Fig. 40 – Horizontal Left Application-Vent Elbow Right

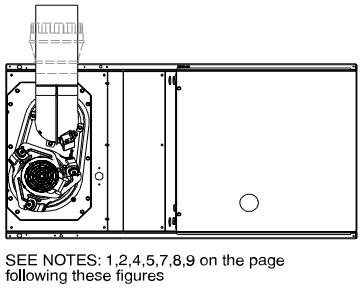

A03215

Fig. 41 – Horizontal Left Application-Vent Elbow Up

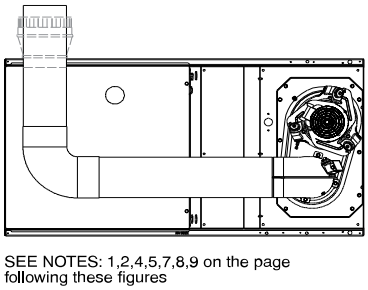

A03219

Fig. 42 – Horizontal Right Application-Vent Elbow Left then Up

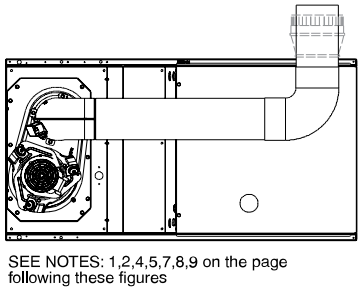

A03214

Fig. 43 – Horizontal Left Application-Vent Elbow Right then Up

Venting notes for Fig. 31 - Fig. 43

1. For common vent, vent connector sizing and vent material: United States-use the NFGC.
2. Immediately increase to 5-inch (127 mm) or 6-inch (152 mm) vent connector outside furnace casing when 5-inch (127 mm) vent connector is required, refer to Note 1 above.
3. Side outlet vent for upflow and downflow installations must use Type B vent immediately after exiting the furnace, except when factory-authorized, Downflow Vent Guard Kit, is used in the downflow position. See Product Data Sheet for accessory listing.
4. Type-B vent where required, refer to Note 1 above.
5. Four-inch single-wall (26 ga. min.) vent must be used inside furnace casing and when the Downflow Vent Guard Kit is used external to the furnace. See Product Data Sheet for accessory listing.
6. Factory-authorized accessory Downflow Vent Guard Kit required in downflow installations with lower vent configuration. See Product Data Sheet for accessory listing.
7. Chimney Adapter Kit may be required for exterior masonry chimney applications. Refer to Chimney Adapter Kit for sizing and complete application details. See Product Data Sheet for accessory listing.
8. Secure vent connector to furnace elbow with (2) corrosion-resistant sheet metal screws, spaced approximately 180° apart.
9. Secure all other single wall vent connector joints with (3) corrosion resistant screws spaced approximately 120° apart. Secure Type-B vent connectors per vent connector manufacturer's recommendations.

AIR DELIVERY - CFM

Table 9 – Air Delivery - CFM (with filter)*

Unit Size	Airflow Setting	Default Setting	External Static Pressure (in. w.c.)									
			0.1	0.2	0.3	0.4	0.5	0.6	0.7	0.8	0.9	1
36045A	1	Constant Fan	455	385	320	250	175	--	--	--	--	--
	2		490	425	360	300	225	150	--	--	--	--
	3		535	480	415	360	305	230	160	--	--	--
	4		565	510	450	395	345	285	215	135	--	--
	5		605	555	500	445	390	345	285	215	145	--
	6		645	595	545	490	440	395	350	290	225	155
	7		695	645	600	550	500	455	410	370	310	255
	8	Heating	715	670	625	575	530	485	440	400	355	290
	9		770	730	685	640	595	555	510	470	430	390
	10		825	780	740	700	660	615	575	535	500	460
	11		870	830	795	755	720	680	640	600	560	525
	12		920	880	845	810	775	735	700	660	625	590
	13		965	930	895	855	825	790	755	720	685	650
	14		1005	970	935	905	875	840	805	770	740	705
	15		1055	1020	990	960	930	895	865	835	800	770
	16		1105	1070	1040	1010	980	950	925	895	860	830
	17		1125	1095	1065	1035	1005	975	950	920	890	860
	18	Cooling	1210	1180	1150	1120	1095	1065	1040	1010	980	945
42045B	1	Constant Fan	495	425	345	270	210	135	--	--	--	--
	2		540	475	400	330	270	205	135	--	--	--
	3		580	520	455	380	320	260	200	160	--	--
	4		635	575	520	450	385	330	275	215	155	--
	5		685	630	570	515	450	390	340	290	235	180
	6	Heating	720	665	615	560	505	445	395	345	295	245
	7		770	720	665	615	565	505	450	400	355	310
	8		830	785	735	690	640	590	535	485	440	395
	9		880	840	790	745	705	660	610	555	510	465
	10		945	905	860	815	775	735	690	645	595	550
	11		1005	965	920	880	840	800	760	725	680	630
	12		1060	1025	985	940	905	865	825	790	750	710
	13		1120	1085	1050	1010	970	935	900	865	830	795
	14		1170	1135	1100	1065	1030	995	960	925	890	855
	15		1235	1205	1170	1135	1100	1065	1035	1000	965	915
	16		1295	1265	1235	1200	1170	1135	1105	1075	1020	930
	17		1365	1335	1305	1270	1240	1210	1180	1125	1035	930
	18	Cooling	1460	1420	1375	1330	1285	1235	1190	1130	1035	930
36070A	1	Constant Fan	465	400	330	250	180	115	--	--	--	--
	2		500	440	370	295	225	165	115	-	--	--
	3		550	490	430	365	300	235	175	130	---	--
	4		595	540	485	425	355	295	240	185	135	--
	5		635	580	530	475	420	355	300	245	195	145
	6		675	625	575	525	470	410	355	300	250	205
	7		715	670	625	575	525	475	420	370	320	270
	8		760	720	675	630	585	535	490	435	390	340
	9		805	765	725	685	640	595	550	505	455	410
	10		855	820	780	740	700	660	615	575	530	485
	11		905	870	835	795	760	720	685	645	600	560
	12		950	915	880	845	810	775	740	700	665	625
	13		1005	970	940	905	870	840	805	770	735	700
	14		1055	1020	990	960	930	895	865	830	800	765
	15	Heating	1085	1055	1025	995	965	935	900	870	840	810
	16		1120	1090	1060	1030	1000	970	940	910	880	850
	17		1150	1120	1095	1065	1035	1005	975	945	920	890
	18	Cooling	1220	1195	1170	1140	1115	1090	1060	1035	1005	970

Table 9 – Air Delivery - CFM (with filter)* (Continued)

Unit Size	Airflow Setting	Default Setting	External Static Pressure (in. w.c.)									
			0.1	0.2	0.3	0.4	0.5	0.6	0.7	0.8	0.9	1
36070B	1	Constant Fan	475	385	300	220	155	-	--	--	--	--
	2		515	430	350	275	200	130	--	--	--	--
	3		565	490	410	340	270	205	140	--	--	--
	4		610	540	470	400	335	265	210	150	--	--
	5		655	590	525	455	395	330	270	215	155	--
	6		700	635	570	505	445	385	325	270	220	165
	7		740	685	620	560	500	445	390	335	280	235
	8		790	735	675	620	565	510	455	400	350	300
	9		835	785	730	675	620	570	515	465	415	365
	10		880	830	780	725	675	625	575	525	480	430
	11		935	890	840	790	740	690	645	595	550	505
	12		985	940	895	845	800	750	705	665	620	575
	13		1035	990	950	900	855	810	770	730	685	640
	14		1080	1040	995	950	910	865	825	785	745	705
	15	Heating	1120	1075	1035	995	950	910	870	830	790	750
	16		1175	1140	1100	1060	1020	980	940	905	865	830
	17		1225	1190	1155	1115	1080	1040	1000	965	930	895
	18	Cooling	1300	1265	1230	1190	1160	1120	1085	1050	1015	980
48070B	1	Constant Fan	545	465	385	310	235	155	--	--	--	--
	2		605	535	455	385	315	250	175	-	--	--
	3		665	595	530	460	395	330	270	205	--	--
	4		740	675	615	550	490	430	370	315	255	190
	5		810	750	690	635	570	515	460	405	355	305
	6		870	815	760	705	650	595	545	490	440	390
	7		955	900	850	795	745	695	645	595	545	495
	8		1025	975	925	880	835	785	735	685	645	595
	9		1095	1050	1005	955	915	870	820	770	730	685
	10		1175	1135	1090	1045	1005	960	920	875	830	790
	11		1220	1180	1135	1095	1055	1015	975	935	890	850
	12	Heating	1320	1285	1245	1205	1170	1130	1095	1055	1015	980
	13		1390	1355	1315	1280	1245	1210	1170	1135	1100	1065
	14		1475	1435	1405	1370	1335	1300	1265	1235	1200	1165
	15		1550	1520	1485	1450	1415	1385	1350	1320	1290	1260
	16		1630	1600	1570	1540	1510	1480	1450	1420	1390	1365
	17		1705	1675	1640	1615	1590	1560	1535	1505	1480	1455
	18	Cooling	1840	1810	1775	1735	1700	1660	1620	1580	1540	1500
48070C	1	Constant Fan	590	495	390	290	210	120	--	--	--	--
	2		665	580	485	390	300	225	145	-	--	--
	3		730	655	565	480	385	310	245	170	--	--
	4		820	750	675	595	520	435	360	300	235	165
	5		875	810	740	665	595	515	435	370	315	250
	6		950	885	830	760	695	625	550	480	410	360
	7		1045	985	930	875	810	750	685	620	555	490
	8		1140	1085	1030	980	925	865	810	750	695	635
	9		1200	1145	1095	1050	1000	945	885	835	780	730
	10	Heating	1300	1250	1195	1155	1110	1065	1015	960	910	865
	11		1370	1320	1275	1230	1190	1150	1105	1055	1005	960
	12		1455	1410	1365	1325	1285	1245	1205	1165	1115	1070
	13		1535	1490	1450	1415	1375	1340	1305	1265	1225	1185
	14		1615	1575	1535	1495	1460	1425	1390	1355	1320	1285
	15		1705	1670	1635	1600	1565	1535	1505	1470	1435	1400
	16		1775	1745	1710	1680	1650	1620	1590	1560	1530	1505
	17		1870	1840	1810	1780	1750	1725	1705	1670	1630	1530
	18	Cooling	2025	1975	1925	1875	1820	1770	1725	1680	1630	1535

Table 9 – Air Delivery - CFM (with filter)* (Continued)

Unit Size	Airflow Setting	Default Setting	External Static Pressure (in. w.c.)									
			0.1	0.2	0.3	0.4	0.5	0.6	0.7	0.8	0.9	1
42090B	1	Constant Fan	670	595	485	405	330	245	190	130	--	--
	2		705	635	535	450	380	305	235	180	125	--
	3		760	695	625	520	450	380	310	245	195	145
	4		810	750	685	585	515	450	385	320	260	210
	5		860	800	745	675	580	510	450	390	325	270
	6		910	855	800	740	650	580	515	460	400	345
	7		950	900	850	790	730	640	575	515	465	410
	8		1025	975	925	875	820	740	670	615	560	510
	9		1075	1030	985	935	885	835	745	690	630	580
	10		1140	1095	1050	1005	960	910	855	775	715	665
	11		1210	1165	1125	1085	1040	995	950	895	815	760
	12	Heating	1255	1210	1170	1130	1085	1045	1000	955	880	820
	13		1280	1235	1200	1160	1115	1075	1030	990	925	855
	14		1340	1300	1265	1225	1185	1145	1105	1065	1025	965
	15		1410	1370	1335	1300	1265	1225	1190	1150	1110	1070
	16		1475	1440	1405	1370	1335	1300	1265	1225	1190	1150
	17		1550	1515	1480	1445	1415	1380	1345	1310	1270	1235
	18	Cooling	1620	1585	1555	1520	1490	1460	1425	1375	1315	1255
48090C	1	Constant Fan	685	585	490	395	315	240	170	--	--	--
	2		745	660	560	480	390	320	250	185	--	--
	3		810	725	635	550	475	395	325	265	200	--
	4		860	785	700	615	540	465	395	335	275	215
	5		915	845	765	680	610	535	465	400	345	285
	6		980	910	840	765	690	620	555	490	425	370
	7		1040	980	910	840	770	700	635	575	510	450
	8		1100	1040	975	910	840	770	710	650	590	530
	9		1170	1110	1055	995	930	870	800	745	685	630
	10		1225	1170	1110	1055	995	930	865	810	755	700
	11		1295	1245	1195	1135	1085	1025	970	905	850	795
	12		1315	1265	1215	1160	1110	1055	1000	935	880	830
	13	Heating	1350	1300	1250	1195	1145	1090	1035	975	915	865
	14		1420	1375	1330	1280	1230	1185	1130	1075	1020	960
	15		1495	1455	1405	1360	1315	1270	1220	1170	1120	1060
	16		1565	1525	1480	1435	1395	1350	1305	1260	1210	1160
	17		1645	1605	1565	1525	1480	1435	1390	1345	1300	1250
	18	Cooling	1725	1680	1645	1605	1565	1520	1480	1420	1340	1260
60090C	1	Constant Fan	770	655	540	430	325	195	--	--	--	--
	2		850	745	640	535	435	340	210	-	--	--
	3		925	825	725	625	530	435	345	230	--	--
	4		1030	940	845	755	665	575	490	405	315	185
	5		1120	1040	950	865	780	700	615	540	455	380
	6		1210	1130	1050	970	895	810	735	655	580	510
	7		1285	1215	1140	1065	990	915	840	765	690	620
	8		1385	1320	1250	1180	1110	1040	975	900	835	765
	9		1480	1415	1355	1290	1215	1155	1090	1025	960	895
	10		1570	1510	1450	1390	1325	1260	1200	1140	1080	1015
	11	Heating	1675	1615	1560	1505	1450	1390	1330	1270	1210	1155
	12		1775	1720	1670	1615	1560	1510	1450	1395	1340	1285
	13		1865	1815	1765	1715	1660	1610	1555	1500	1450	1395
	14		1965	1920	1875	1825	1780	1730	1680	1630	1580	1535
	15		2075	2030	1985	1940	1895	1845	1805	1760	1710	1660
	16		2170	2135	2090	2050	2005	1965	1925	1880	1835	1790
	17	Cooling	2270	2225	2190	2150	2115	2075	2035	2000	1960	1920
	18		2485	2445	2410	2365	2315	2265	2215	2160	2105	2050

Table 9 – Air Delivery - CFM (with filter)* (Continued)

Unit Size	Airflow Setting	Default Setting	External Static Pressure (in. w.c.)									
			0.1	0.2	0.3	0.4	0.5	0.6	0.7	0.8	0.9	1
60110C	1	Constant Fan	845	730	625	520	420	330	240	135	--	--
	2		920	810	705	610	515	425	345	260	155	--
	3		1025	920	825	735	645	560	475	400	320	245
	4		1115	1015	930	840	760	675	595	520	445	380
	5		1235	1150	1060	980	900	825	750	675	600	525
	6		1340	1260	1180	1100	1025	955	885	810	740	675
	7		1440	1365	1290	1215	1140	1070	1005	940	875	805
	8		1530	1460	1390	1320	1250	1185	1115	1055	995	930
	9		1640	1575	1510	1440	1375	1310	1250	1190	1130	1075
	10		1745	1685	1620	1555	1495	1430	1370	1315	1260	1205
	11		1835	1780	1720	1665	1605	1550	1490	1435	1380	1330
	12	Heating	1895	1840	1785	1730	1675	1615	1560	1505	1455	1400
	13		1950	1895	1840	1785	1725	1670	1615	1565	1510	1460
	14		2055	2005	1955	1900	1845	1790	1740	1690	1640	1590
	15		2160	2110	2065	2015	1960	1910	1860	1815	1765	1720
	16	Cooling	2260	2210	2165	2120	2070	2020	1975	1930	1885	1840
	17		2355	2310	2265	2225	2180	2135	2090	2045	2005	1960
	18		2520	2480	2435	2395	2350	2310	2255	2195	2135	2080
60110D	1	Constant Fan	840	725	615	505	400	310	215	135	--	--
	2		930	825	720	620	520	420	335	250	165	--
	3		1015	915	815	725	630	530	440	360	280	205
	4		1095	995	905	815	725	635	540	460	385	310
	5		1185	1090	1005	915	835	750	665	580	500	430
	6		1250	1160	1080	1000	915	840	755	675	595	525
	7		1335	1255	1175	1100	1020	940	870	790	710	635
	8		1435	1355	1280	1210	1140	1060	990	920	845	780
	9		1510	1435	1360	1290	1225	1155	1085	1015	950	880
	10		1600	1530	1455	1390	1325	1260	1190	1125	1060	995
	11		1685	1615	1545	1480	1420	1360	1295	1230	1165	1110
	12		1760	1695	1630	1565	1505	1450	1390	1330	1270	1210
	13		1855	1795	1730	1670	1610	1560	1505	1445	1385	1330
	14		1945	1885	1830	1770	1710	1655	1605	1555	1495	1445
	15	Heating	2025	1970	1915	1855	1800	1750	1700	1650	1600	1550
	16		2055	2000	1945	1890	1835	1785	1735	1685	1635	1585
	17		2125	2070	2015	1965	1910	1860	1815	1765	1720	1670
	18	Cooling	2220	2170	2115	2060	2005	1960	1905	1860	1810	1750
60135D	1	Constant Fan	760	635	520	405	290	175	--	--	--	--
	2		815	700	590	485	370	270	155	--	--	--
	3		905	795	685	590	490	380	290	185	--	--
	4		975	870	770	680	590	490	395	310	205	--
	5		1025	920	825	740	655	560	460	375	290	195
	6		1120	1025	935	845	770	690	600	505	420	350
	7		1205	1120	1030	945	870	800	720	635	550	470
	8		1285	1200	1120	1040	965	900	830	750	675	590
	9		1380	1305	1225	1150	1075	1010	950	885	815	735
	10		1450	1380	1305	1230	1160	1095	1030	975	910	840
	11		1555	1480	1415	1345	1275	1210	1150	1095	1045	985
	12		1635	1565	1500	1435	1370	1310	1245	1190	1140	1090
	13		1710	1645	1585	1525	1460	1400	1340	1285	1230	1185
	14		1785	1725	1665	1600	1545	1485	1425	1375	1320	1275
	15	Heating	1870	1805	1750	1695	1640	1580	1525	1475	1420	1375
	16		1940	1885	1830	1780	1725	1675	1620	1570	1520	1475
	17		2020	1965	1915	1865	1815	1765	1715	1665	1620	1580
	18	Cooling	2125	2075	2025	1975	1925	1875	1825	1775	1705	1640

Table 9 – Air Delivery - CFM (with filter)* (Continued)

Unit Size	Airflow Setting	Default Setting	External Static Pressure (in. w.c.)									
			0.1	0.2	0.3	0.4	0.5	0.6	0.7	0.8	0.9	1
60155D	1	Constant Fan	765	645	520	395	290	185	--	--	--	--
	2		860	750	635	520	410	315	220	145	--	--
	3		915	810	705	600	485	385	300	210	135	--
	4		1000	895	795	695	595	490	400	320	230	145
	5		1075	975	880	790	695	595	500	420	335	260
	6		1170	1075	985	900	815	730	635	545	470	390
	7		1260	1170	1090	1010	930	845	765	675	590	510
	8		1340	1255	1180	1100	1025	950	870	795	710	625
	9		1415	1340	1260	1190	1120	1045	970	895	815	745
	10		1505	1430	1355	1290	1220	1150	1080	1010	945	870
	11		1575	1500	1430	1365	1295	1230	1165	1100	1030	970
	12		1660	1590	1520	1455	1395	1335	1275	1210	1140	1085
	13		1735	1670	1605	1545	1485	1425	1365	1310	1250	1185
	14		1825	1760	1700	1640	1585	1530	1475	1425	1365	1310
	15		1920	1860	1800	1740	1685	1630	1580	1530	1475	1420
	16	Heating	2000	1945	1890	1825	1775	1725	1675	1625	1575	1525
	17		2085	2035	1980	1925	1870	1825	1780	1740	1695	1650
	18	Cooling	2205	2150	2095	2040	1985	1935	1885	1835	1775	1720

NOTE:

1.A filter is required for each return-air inlet. Airflow performance included 3/4-in. (19 mm) washable filter media such as contained in a factory - authorized accessory filter rack. See accessory list. To determine airflow performance without this filter, assume an additional 0.1 in. w.c. available external static pressure.

2.Adjust the blower airflow setting as necessary for the proper air temperature rise for each installation.

3.Airflows over 1800 CFM require bottom return, two-side return, or bottom and side return. A minimum filter size of 20” x 25” (508 x 635 mm) is required.

4.For upflow applications, air entering from one side into both the side of the furnace and a return air base counts as a side and bottom return

5..The -- entry indicates unstable operating conditions

Table 10 – Airflow Settings

	Default Airflow Settings*		Designated Airflow Settings	
Unit Size	Heating	Cooling	Heating	Constant Fan
36045A	8	18	(4-12)	(1-7)
42045B	6	18	(4-12)	(1-7)
36070A	15	18	(9-16)	(1-7)
36070B	15	18	(11-17)	(1-8)
48070B	12	18	(7-13)	(1-4)
48070C	10	18	(6-14)	(1-8)
42090B	12	18	(7-16)	(1-9)
48090C	13	18	(8-16)	(1-6)
60090C	11	17	(7-14)	(1-9)
60110C	12	16	(8-15)	(1-9)
60110D	15	18	(9-17)	(1-6)
60135D	15	18	(12-16)	(1-7)
60155D	16	18	(13-17)	(1-2)

*. Setting #1 is the default setting for Constant Fan

FURNACE CONTROL PROGRAMMING AND NAVIGATION

On-Board Control Method

⚠ WARNING

ELECTRICAL SHOCK HAZARD

Failure to follow this warning could result in personal injury, or death.

Blower access door switch removes 115-V power to control. No component operation can occur unless switch is closed. Caution must be taken when manually closing this switch for service purposes.

Do not tape or permanently allow the door switch to be bypassed. Temporarily depress the door switch with one hand while accessing the service buttons with your other hand. Do not touch uninsulated electrical components.

This furnace model is equipped with an on-board 3-digit LCD display with pushbutton navigation for the adjustment of operating parameters, diagnostics, and service. The control board must be powered to use the display and pushbuttons. Upon startup, the control will alternate displaying the Model Program Number (PrG) and Software Version (uEr). The control board has been programmed at the factory with a Model Program Number specific to the furnace product number. The correct Model Program Number is shown on the furnace rating plate.

The system’s status is displayed after startup or after no control buttons have been pressed for 60 seconds. Status Code LED will also be illuminated or blinking when displaying the system status. The codes which indicate the current operating mode of the system as shown in Table 11.

Table 11 – System Status Display Codes

Display	Operating Mode	Notes
idL	Idle/Standby Mode	No active demands
Ht	Heating Mode	Gas Heating active
CL	Cooling Mode	Cooling or Heat Pump active
HPd	Heat Pump Defrost Mode	Gas Heating cycle active during Heat Pump Defrost cycle
CFn	Continuous Fan Mode	Continuous Fan active
bLr	Secondary Unit Operating Blower	Only used when control is the secondary furnace of a twinned furnace system and primary furnace is active
##.#	Active Status Code	See Fig. 45 or Furnace Service Label for codes

Table 12 – Main Menu Options

Display	Menu Item	Use
FLt	Last 7 faults that occurred	Faults code menu stores the 7 latest faults in memory. If no faults, None (non) will be displayed. To clear fault history, scroll to Clear (CLr) and press MENU/SELECT. See Fig. 45 or Furnace Service Label for codes.
Ht	Heating blower speed	Heating Airflow Setting. Adjust higher to lower Temp. Rise; lower to increase Temp. Rise. See Start-Up Procedures. See Fig. 44 for allowable selections and Table 9 for airflows.
CL	Cooling and Heat Pump blower speed	Cooling Airflow Setting. See Fig. 44 for allowable selections and Table 9 for airflows. Refer to cooling or heat pump equipment data for required airflow settings.
CFn	Constant Fan blower speed	Constant Fan Airflow Setting. See Fig. 44 for allowable selections and Table 9 for airflows.
Hod	Heat OFF Delay	Value shown in seconds. Shorter delays may leave unused heat in ducts. Longer delays may blow cold air at the end of heating demands.
Cod	Cool OFF Delay	Value shown in seconds. Shorter delays may leave unused energy in furnace coil. Longer delays may re-evaporate condensate.
dir	Direction	Adjusts display orientation 180 degrees between up flow (UPF) and down flow (dnF).
tnn	Twinning	Primary (Pr i) or Secondary (SEC) furnace selection. Adjust only if furnace is used in a twinned furnace system. Use of accessory kit required. See kit instructions.
inF	Program # and Software	Do NOT program the control board with a Model Program Number different than what is specified on the rating plate. Alternates displaying the saved Model Program Number (PrG) and Software Version (uEr).
Ct	Component Test	Use to validate components are functioning as intended. See Component Self-Test instructions in the Start-Up Procedures section.
rSt	Reset	Reset settings to Factory Default by selecting Yes (YES).

The Main Menu provides access to operating parameters of the furnace control including airflows as well as other diagnostics. See Fig. 28 for the location of the pushbuttons. Scroll through Main Menu by pressing MENU/SELECT button. Press NEXT/OPTION to display the current setting of the parameter (value will flash). Additional presses will scroll through setting options. Press MENU/SELECT button to save a new setting and return to the Main Menu. The display will flash three times to confirm a new setting selection has been saved. Fig. 44 shows the flow of the menu and settings. Table 12 provides additional information on parameter adjustment and applicability.

NFC and Supported App Method

This furnace control board is also equipped with NFC (Near Field Communication) technology which allows the adjustment of operating parameters, diagnostics, and service via a field-supplied mobile device with NFC capability and supported mobile app. Remove 115-V power from the furnace control board to use this method. See Fig. 28 for the location of the NFC antenna. Additional instructions and help may be available through the supported mobile app.

Scan the mobile app QR Code on page 1 of this manual for more information and a link to download the mobile app.

Control Board Replacement

If the control board must be replaced, the new board must be programmed with the correct Model Program Number before the furnace will operate. Do NOT program the control board with a Model Program Number different than what is specified on the rating plate. The control may be programmed by either of these approved methods:

1. Use the supported mobile app to flash the model program onto the board using Near Field Communication (NFC). Scan the QR code on page 1 of this manual for more information and a link to download the mobile app.
2. Use the correct Super Plug (available from distributor / replacement component) for the control board to copy the correct model program onto the new board.

Further details and instructions for these programming methods are provided with the replacement control board.

⚠ CAUTION

FURNACE OVERHEATING HAZARD

Failure to follow this caution could result in reduced furnace life.

Do NOT program the control board with a Model Program Number different than what is specified on the rating plate. Parameter options will not match design values.

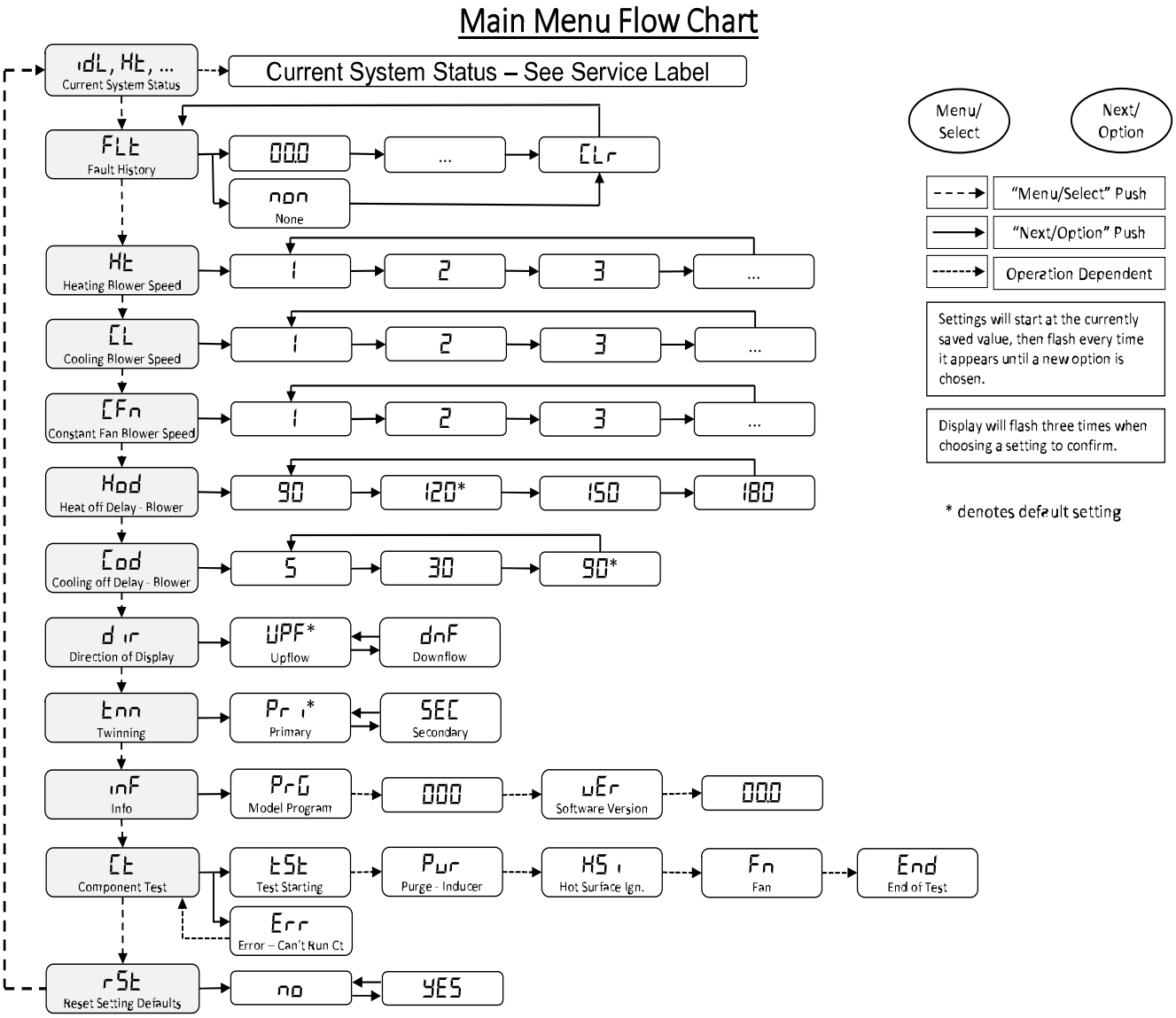

A220518

Fig. 44 – 3 Digit Display Flow Chart

SERVICE LABEL

STATUS CODE TABLE

Scan QR code or reference troubleshooting guide in installation manual.
The major status code is displayed in the first 2 digits of the display. The minor status code is displayed in the third digit. The major status code is also displayed on the LED indicator through the door with the first digit being the number of short flashes and the second digit being the number of long flashes.

Major	Minor	Description
10	1	L1 polarity fault
Rapid flash LED		
12	1	W on at power up
13	1	Limit Lockout - switch open longer than 3 minutes in Main Limit circuit
14	1	Ignition Lockout after 4 consecutive ignition tries
	2	Flame lost 3 times after 70s of heating
	3	Lockout - 7 loss of flame events during a heat request
21	1	24VAC sensed on gas valve when shouldn't be
22	1	False flame
23	1	Stuck Main pressure switch
24	1	Fuse fault
25	1	No program info in micro, no heating operation.
	2	Corrupted program file, reprogram control using service app or super plug (supplied separately), no heating operation.
	3	Twinned units are not identical, program #'s do not match. Ensure furnaces are identical (same program #) when twinning. Main unit will not operate heating.
25	4	Main program invalid, using backup program to operate. Reprogram control to correct issue. Control still operates normally.
	5	Installer settings corrupted. Try reselecting installer settings, or reprogram control. Control will operate using default installer settings.
	6	Wrong program for control used - reprogram control so program matches control used. No heating operation.
		If program in furnace control is missing, not recognized, or corrupted. Reprogram control with correct program # as listed on the rating plate.Replace control if issue remains.
27	1	Program in super plug is missing, not recognized, or corrupted. Remove super plug then retry. If still have 27 code, try a different super plug. If still fails, replace control.
	2	
	3	
31	1	Open Main pressure switch.
33	1	A switch has opened in the Main Limit circuit.
34	1	Ignition fault - during four consecutive ignition trials.
	2	After successful ignition (flame proven) flame loss before heating blower on delay.
	3	After successful ignition (flame proven) flame loss after heating blower on delay.
45	1	Control failure – flame circuit fault, memory mismatch or sequence error.
	2	Control failure – gas valve relay will not close.
	3	Control failure – EEPROM memory issue.
		For code 45, cycle power, if code 45 repeats, replace control.
46	1	Momentary loss of power

MENU NAVIGATION

Scroll through main menu by pressing the MENU/SELECT button. Press NEXT/OPTION button to view current setting (will flash on display) and to scroll through setting options. Press MENU/SELECT button to save new setting and return to main menu. The display will flash to confirm setting selection before returning to the main menu.

SYSTEM STATUS

DISPLAY	DESCRIPTION
idL	Idle / Standby Mode
Ht	Heating Mode
CL	Cooling Mode
HPd	Heat Pump Defrost Mode
CFn	Continuous Fan Mode
bLr	Secondary Unit Operating Blower during CFn, CL, or Ht
##.#	Active Status Code

COMPONENT TEST

To initiate the component test sequence, the control must be in (idL) mode. No thermostat demands (W, Y, G). Select component test (Ct) from menu select buttons to start the component test sequence.Once initiated the furnace control will perform the following sequence:
1. Pur- Inducer ON (remains ON for test).
2. HS i- After waiting 10s, HSI ON for 15 seconds.
3. Fn- After HSI, then Blower ON for 10 seconds.
4. End- After Blower, Inducer ON for 10 more seconds.
The test ends.

MAIN MENU

DISPLAY	DESCRIPTION
idL,Ht,...	Current System Status
FLt	Last 7 faults that occured
Ht	Heating Blower speed
CL	Cooling and Heat Pump Blower speed
CFn	Continuous Fan speed
Hod	Heat OFF delay
Cod	Cool OFF delay
dir	Orientation upflow or downflow
tnn	Twinning Main or Secondary
inF	Program # and Software version
Ct	Component test
rSt	Reset All Installer Settings to Factory Defaults

All copyrighted materials used herein are the property of their respective owners.

SERVICE LABEL

348061-201 REV.A

A210786

Fig. 45 – Service Label

START-UP, ADJUSTMENT, AND SAFETY CHECK

GENERAL

WARNING

FIRE HAZARD

Failure to follow this warning could result in personal injury, death and/or property damage.

This furnace is equipped with manual reset limit switches in the gas control area. The switches open and shut off power to the gas valve if a flame rollout or overheating condition occurs in the gas control area. DO NOT bypass the switches. Correct inadequate combustion air supply problem before resetting the switches.

1. Maintain 115-V wiring and ground. Improper polarity will result in rapid flashing control diagnostic light and Status code (10 . 1) is displayed. The furnace will NOT operate.
2. Make thermostat wire connections at the 24-V terminal block on the furnace control. Failure to make proper connections will result in improper operation (see Fig. 24).
3. Gas supply pressure to the furnace must be greater than 4.5-in. w.c. (0.16 psig) but not exceed 14-in. w.c. (0.5 psig).
4. Check all manual-reset switches for continuity.
5. Install blower compartment door. Door must be in place to operate furnace.
6. Replace outer door.

CAUTION

CUT HAZARD

Failure to follow this caution may result in personal injury.

Sheet metal parts may have sharp edges or burrs. Use care and wear appropriate protective clothing, safety glasses and gloves when handling parts and servicing furnaces.

Start-Up Procedures

WARNING

FIRE AND EXPLOSION HAZARD

Failure to follow this warning could cause personal injury, death and/or property damage.

Never test for gas leaks with an open flame. Use a commercially available soap solution made specifically for the detection of leaks to check all connections.

1. Purge gas lines after all connections have been made.
2. Check gas lines for leaks.

WARNING

ELECTRICAL SHOCK HAZARD

Failure to follow this warning could result in personal injury, or death.

Blower access door switch opens 115-V power to control. No component operation can occur unless switch is closed. Caution must be taken. Do not touch uninsulated electrical components when manually closing this switch. for service purposes.

3. To Begin Component Self-Test
   a. Remove thermostat wire connected to R terminal on control to ensure no thermostat demands are present.
   b. Temporarily depress blower door switch to power the control board.

CAUTION

SHOCK HAZARD

Failure to follow this caution could result in personal injury.

Do not tape or permanently allow the door switch to be bypassed. Temporarily depress the door switch with one hand while accessing the service buttons with your other hand. Do not touch uninsulated electrical components.

   c. To initiate the component test sequence, the control must be in (idL) mode. no thermostat demands (W, Y, G). Select component test (Ct) from menu select buttons to start the component test sequence. Once initiated the furnace control will perform the test sequence as shown in Table 13. Once complete, connect thermostat wire to R terminal on control board and re-install blower door.
4. Operate furnace per instruction on door.
5. Verify furnace shut down by lowering thermostat setting below room temperature.
6. Verify furnace restarts by raising thermostat setting above room temperature.

Table 13 – Test Sequence

Display	Operating Mode	Function
tSt	Test	Confirms start of Component Test mode.
PUr	Purge	Inducer ON for 10 seconds before next stage. Inducer remains ON for test duration.
HS 1	Hot Surface Igniter	Hot Surface Igniter ON for 15 seconds, then OFF.
Fn	Fan	Blower ON at 50% torque for 10 seconds, then OFF.
End	End Test	All component OFF except for Inducer for 10 seconds. Display returns to idL. If a thermostat input is detected or fault condition activates during the test sequence, control will abort and display End for 6 seconds.
Err	Error	Displayed if component test is not able start. Check for thermostat inputs or faults, and system status is Idle (idL).

WIRING DIAGRAM

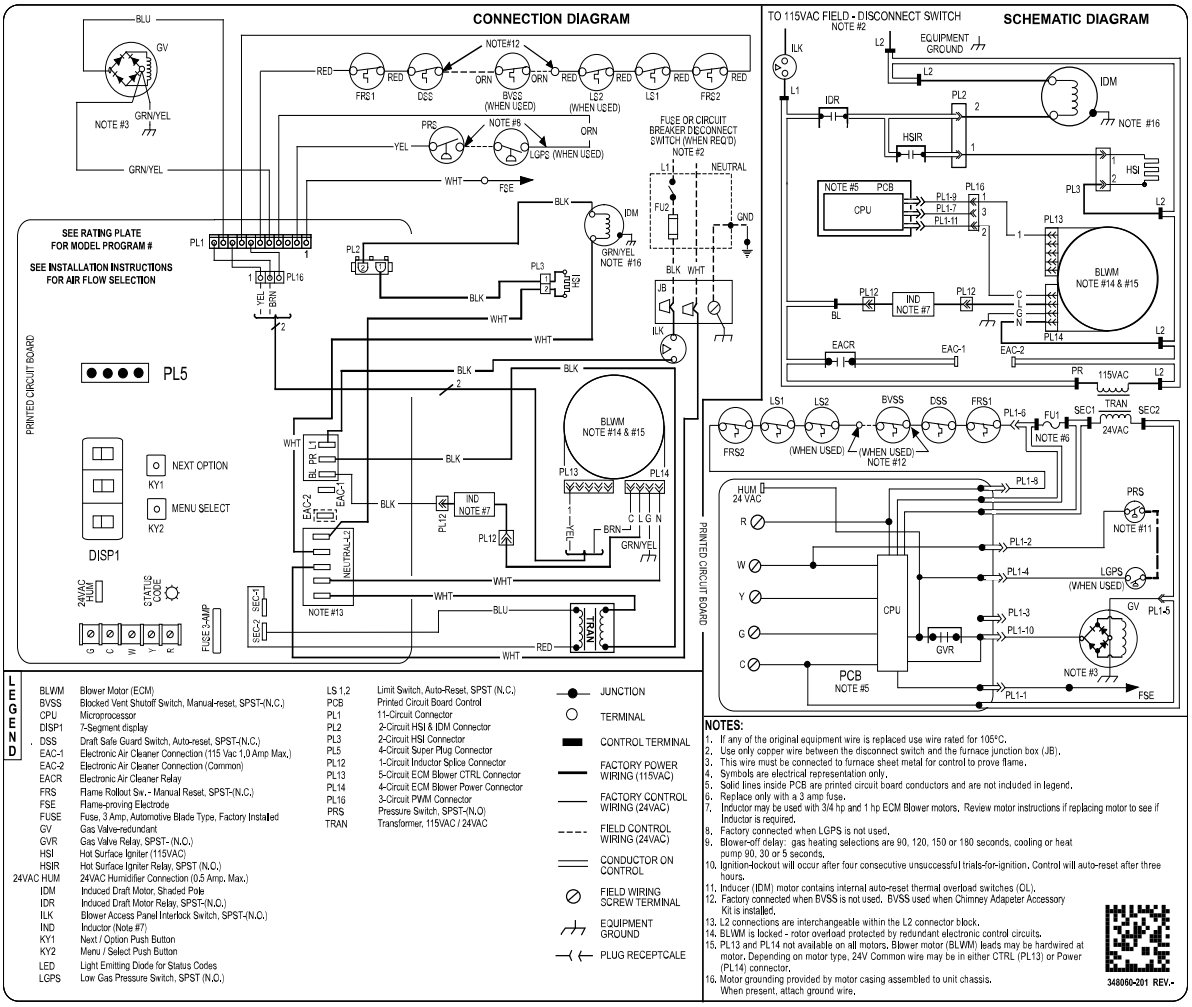

A210787

Fig. 46 – Wiring Diagram

Adjustments

Furnace gas input rate on rating plate is for installations at altitudes up to 2000 ft. (610 M). Furnace input rate must be within +/-2 percent of furnace rating plate input.

⚠ WARNING

FIRE HAZARD

Failure to follow this warning could result in injury, death and/or property damage.

DO NOT bottom out gas valve regulator adjusting screw. This can result in unregulated manifold pressure and result in excess overfire and heat exchanger failures.

1. Determine the correct gas input rate. The input rating for altitudes above 2,000 ft. (610 M) must be reduced by 4 percent for each 1,000 ft. (305 M) above sea level. For installations below 2000 ft. (610 M), refer to the unit rating plate. For installations above 2000 ft. (610 M), multiply the input on the rating plate by the de-rate multiplier in Table 14 for the correct input rate.

⚠ CAUTION

FURNACE DAMAGE HAZARD

Failure to follow this caution may result in reduced furnace life.

DO NOT redrill orifices. Improper drilling (burrs, out-of-round holes, etc.) can cause excessive burner noise and misdirection of burner flames. This can result in flame impingement of heat exchangers, causing failures (see Fig. 47).

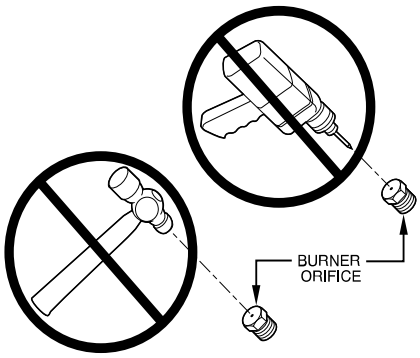

A93059

Fig. 47 – Orifice Hole

Table 14 – Altitude Derate Multiplier for U.S.A.

ALTITUDE (FT. / M)	PERCENT OF DERATE	DERATE MULTIPLIER FACTOR*
0–2000 (0-610)	0	1.00
2001–3000 (610-914)	8–12	0.90
3001–4000 (914-1219)	12–16	0.86
4001–5000 (1219-1524)	16–20	0.82
5001–6000 (1524-1829)	20–24	0.78
6001–7000 (1829-2134)	24–28	0.74
7001–8000 (2134-2438)	28–32	0.70
8001–9000 (2438-2743)	32–36	0.66
9001–10,000 (2743-3048)	36–40	0.62

*. Derate multiplier factors are based on midpoint altitude for altitude range

2. Determine the correct orifice and manifold pressure adjustment. There are two different orifice and manifold adjustment tables. All models in all positions, except Low NOx models in downflow or horizontal positions, use Table 16 (22,000 BTUh/Burner). Low NOx models in the downflow or horizontal positions must use Table 17 (21,000 BTUh/Burner). See input listed on rating plate.
   a. Obtain average yearly gas heat value (at installed altitude) from local gas supplier.
   b. Obtain average yearly gas specific gravity from local gas supplier.
   c. Find installation altitude in Table 16 or Table 17.
   d. Find closest natural gas heat value and specific gravity in Table 16 or Table 17.
   e. Follow heat value and specific gravity lines to point of intersection to find orifice size and manifold pressure settings for proper operation.
   f. Check and verify burner orifice size in furnace. NEVER ASSUME ORIFICE SIZE. ALWAYS CHECK AND VERIFY.

NOTE: If orifice hole appears damaged or it is suspected to have been redrilled, check orifice hole with a numbered drill bit of correct size. Never redrill an orifice. A burr-free and squarely aligned orifice hole is essential for proper flame characteristics.

   g. Replace orifice with correct size if required by Table 14, Table 16, Table 17 and Table 15. Use only factory-supplied orifices. See EXAMPLE 1.

EXAMPLE 1: (0 to 2000 ft. (0 to 610 M) altitude)

For 22,000 BTUh per burner application use Table 16.

Heating value = 1000 BTUh/cu ft.

Specific gravity = 0.62

Therefore: Orifice No. 43*

Manifold pressure: 3.7-in. w.c.

*Furnace is shipped with No. 43 orifices.
In this example all main burner orifices are the correct size and do not need to be changed to obtain proper input rate.

3. Adjust manifold pressure to obtain correct input rate.
   a. Turn gas valve ON/OFF switch to OFF.
   b. Remove manifold pressure tap plug from gas valve (see Fig. 21).
   c. Connect a water column manometer or similar device to manifold pressure tap.
   d. Turn gas valve ON/OFF switch to ON.
   e. Manually close blower door switch.
   f. Set thermostat to call for heat.
   g. Remove regulator seal cap and turn regulator adjusting screw counterclockwise (out) to decrease input rate of clockwise (in) to increase input rate.

NOTE: DO NOT set manifold pressure less than 3.2-in. w.c. or more than 3.8-in. w.c. for natural gas at sea level. If manifold pressure is outside this range, change main burner orifices. Refer to Table 14, Table 16, Table 17 and Table 15.

   h. Install regulator seal cap.
   i. Leave manometer or similar device connected and proceed to Step 4.

4. Verify natural gas input rate by clocking meter.

NOTE: Gas valve regulator adjustment cap must be in place for proper input to be clocked.

   a. Turn off all other gas appliances and pilots served by the meter.
   b. Run furnace for 3 minutes in heating operation.
   c. Measure time (in sec) for gas meter to complete 1 revolution and note reading. The 2 or 5 cubic feet dial provides a more accurate measurement of gas flow.
   d. Refer to Table 16 for cubic ft. of gas per hr.
   e. Multiply gas rate (cu ft./hr) by heating value (BTUh/cu ft.) to obtain input.
   f. If clocked rate does not match required input from Step 1, increase manifold pressure to increase input or decrease manifold pressure to decrease input. Repeat steps b through e until correct input is achieved. Reinstall regulator seal cap on gas valve.

Table 15 – Gas Rate (Cu Ft./Hr.)

SECONDS FOR 1 REVOLUTION	SIZE OF TEST DIAL			SECONDS FOR 1 REVOLUTION	SIZE OF TEST DIAL		
	1 Cu Ft.	2 Cu Ft.	5 Cu Ft.		1 Cu Ft.	2 Cu Ft.	5 Cu Ft.
10	360	720	1800	50	72	144	360
11	327	655	1636	51	71	141	355
12	300	600	1500	52	69	138	346
13	277	555	1385	53	68	136	340
14	257	514	1286	54	67	133	333
15	240	480	1200	55	65	131	327
16	225	450	1125	56	64	129	321
17	212	424	1059	57	63	126	316
18	200	400	1000	58	62	124	310
19	189	379	947	59	61	122	305
20	180	360	900	60	60	120	300
21	171	343	857	62	58	116	290
22	164	327	818	64	56	112	281
23	157	313	783	66	54	109	273
24	150	300	750	68	53	106	265
25	144	288	720	70	51	103	257
26	138	277	692	72	50	100	250
27	133	267	667	74	48	97	243
28	129	257	643	76	47	95	237
29	124	248	621	78	46	92	231
30	120	240	600	80	45	90	225
31	116	232	581	82	44	88	220
32	113	225	563	84	43	86	214
33	109	218	545	86	42	84	209
34	106	212	529	88	41	82	205
35	103	206	514	90	40	80	200
36	100	200	500	92	39	78	196
37	97	195	486	94	38	76	192
38	95	189	474	96	38	75	188
39	92	185	462	98	37	74	184
40	90	180	450	100	36	72	180
41	88	176	439	102	35	71	178
42	86	172	429	104	35	69	173
43	84	167	419	106	34	68	170
44	82	164	409	108	33	67	167
45	80	160	400	110	33	65	164
46	78	157	391	112	32	64	161
47	76	153	383	116	31	62	155
48	75	150	375	120	30	60	150
49	73	147	367				

Table 16 – Orifice Size* and Manifold Pressure (in. w.c.) for Gas Input Rate

(TABULATED DATA BASED ON 22,000 BTUH PER BURNER, DERATED 4%/1000 FT (305M) ABOVE SEA LEVEL)

ALTITUDE RANGE ft (m)		AVG. GAS HEAT VALUE AT ALTITUDE (Btu/cu ft)	SPECIFIC GRAVITY OF NATURAL GAS 0.58 Orifice No.	0.58 Manifold Pressure	0.60 Orifice No.	0.60 Manifold Pressure	0.62 Orifice No.	0.62 Manifold Pressure	0.64 Orifice No.	0.64 Manifold Pressure
U.S.A.	0 (0) to 2000 (610)	900	42	3.5	42	3.6	42	3.7	41	3.5
		925	42	3.3	42	3.4	42	3.5	42	3.7
		950	**43**	**3.8**	42	3.3	42	3.4	42	3.5
		975	**43**	**3.6**	**43**	**3.8**	42	3.2	42	3.3
		1000	**43**	**3.5**	**43**	**3.6**	**43**	**3.7**	**43**	**3.8**
		1025	**43**	**3.3**	**43**	**3.4**	**43**	**3.5**	**43**	**3.6**
		1050	44	3.6	**43**	**3.2**	**43**	**3.4**	**43**	**3.5**
		1075	44	3.4	44	3.5	**43**	**3.2**	**43**	**3.3**
		1100	44	3.3	44	3.4	44	3.5	**43**	**3.2**
U.S.A.	2001 (611) to 3000 (914)	800	42	3.4	42	3.5	42	3.6	42	3.7
		825	42	3.2	42	3.3	42	3.4	42	3.5
		850	**43**	**3.7**	**43**	**3.8**	42	3.2	42	3.3
		875	**43**	**3.5**	**43**	**3.6**	**43**	**3.7**	**43**	**3.8**
		900	**43**	**3.3**	**43**	**3.4**	**43**	**3.5**	**43**	**3.6**
		925	**43**	**3.1**	**43**	**3.2**	**43**	**3.3**	**43**	**3.4**
		950	**43**	**2.9**	**43**	**3.0**	**43**	**3.1**	**43**	**3.2**
		975	**43**	**2.8**	**43**	**2.9**	**43**	**3.0**	**43**	**3.1**
		1000	**43**	**2.6**	**43**	**2.7**	**43**	**2.8**	**43**	**2.9**
U.S.A.	3001 (915) to 4000 (1219)	775	42	3.2	42	3.3	42	3.4	42	3.5
		800	**43**	**3.6**	**43**	**3.8**	42	3.2	42	3.3
		825	**43**	**3.4**	**43**	**3.5**	**43**	**3.7**	**43**	**3.8**
		850	**43**	**3.2**	**43**	**3.3**	**43**	**3.4**	**43**	**3.6**
		875	**43**	**3.0**	**43**	**3.1**	**43**	**3.3**	**43**	**3.4**
		900	**43**	**2.9**	**43**	**3.0**	**43**	**3.1**	**43**	**3.2**
		925	**43**	**2.7**	**43**	**2.8**	**43**	**2.9**	**43**	**3.0**
		950	**43**	**2.6**	**43**	**2.7**	**43**	**2.8**	**43**	**2.8**
U.S.A.	4001 (1220) to 5000 (1524)	750	**43**	**3.6**	**43**	**3.8**	42	3.2	42	3.3
		775	**43**	**3.4**	**43**	**3.5**	**43**	**3.6**	**43**	**3.8**
		800	**43**	**3.2**	**43**	**3.3**	**43**	**3.4**	**43**	**3.5**
		825	**43**	**3.0**	**43**	**3.1**	**43**	**3.2**	**43**	**3.3**
		850	**43**	**2.8**	**43**	**2.9**	**43**	**3.0**	**43**	**3.1**
		875	**43**	**2.7**	**43**	**2.8**	**43**	**2.9**	**43**	**2.9**
		900	**43**	**2.5**	**43**	**2.6**	**43**	**2.7**	**43**	**2.8**
		925	**43**	**2.4**	**43**	**2.5**	**43**	**2.6**	**43**	**2.6**
U.S.A.	5001 (1525) to 6000 (1829)	725	**43**	**3.4**	**43**	**3.5**	**43**	**3.6**	**43**	**3.7**
		750	**43**	**3.2**	**43**	**3.3**	**43**	**3.4**	**43**	**3.5**
		775	**43**	**3.0**	**43**	**3.1**	**43**	**3.2**	**43**	**3.3**
		800	**43**	**2.8**	**43**	**2.9**	**43**	**3.0**	**43**	**3.1**
		825	**43**	**2.6**	**43**	**2.7**	**43**	**2.8**	**43**	**2.9**
		850	**43**	**2.5**	**43**	**2.5**	**43**	**2.6**	**43**	**2.7**
		875	**43**	**2.3**	**43**	**2.4**	**43**	**2.5**	**43**	**2.6**
		900	**43**	**2.2**	**43**	**2.3**	**43**	**2.3**	**43**	**2.4**
U.S.A.	6001 (1830) to 7000 (2133)	675	**43**	**3.4**	**43**	**3.5**	**43**	**3.6**	**43**	**3.7**
		700	**43**	**3.1**	**43**	**3.3**	**43**	**3.4**	**43**	**3.5**
		725	**43**	**2.9**	**43**	**3.0**	**43**	**3.1**	**43**	**3.2**
		750	**43**	**2.7**	**43**	**2.8**	**43**	**2.9**	**43**	**3.0**
		775	**43**	**2.6**	**43**	**2.7**	**43**	**2.7**	**43**	**2.8**
		800	**43**	**2.4**	**43**	**2.5**	**43**	**2.6**	**43**	**2.7**
		825	**43**	**2.3**	**43**	**2.3**	**43**	**2.4**	**43**	**2.5**
		850	**43**	**2.1**	**43**	**2.2**	**43**	**2.3**	**43**	**2.4**

A10180

(TABULATED DATA BASED ON 22,000 BTUH PER BURNER, DERATED 4%/1000 FT (305M) ABOVE SEA LEVEL)

ALTITUDE RANGE ft (m)		AVG. GAS HEAT VALUE AT ALTITUDE (Btu/cu ft)	SPECIFIC GRAVITY OF NATURAL GAS 0.58 Orifice No.	0.58 Manifold Pressure	0.60 Orifice No.	0.60 Manifold Pressure	0.62 Orifice No.	0.62 Manifold Pressure	0.64 Orifice No.	0.64 Manifold Pressure
U.S.A.	7001 (2134) to 8000 (2438)	650	**43**	**3.1**	**43**	**3.2**	**43**	**3.4**	**43**	**3.5**
		675	**43**	**2.9**	**43**	**3.0**	**43**	**3.1**	**43**	**3.2**
		700	**43**	**2.7**	**43**	**2.8**	**43**	**2.9**	**43**	**3.0**
		725	**43**	**2.5**	**43**	**2.6**	**43**	**2.7**	**43**	**2.8**
		750	**43**	**2.4**	**43**	**2.4**	**43**	**2.5**	**43**	**2.6**
		775	**43**	**2.2**	**43**	**2.3**	**43**	**2.4**	**43**	**2.4**
		800	**43**	**2.1**	**43**	**2.1**	**43**	**2.2**	**43**	**2.3**
		825	48	3.7	**43**	**2.0**	**43**	**2.1**	**43**	**2.2**
U.S.A.	8001 (2439) to 9000 (2743)	625	**43**	**2.9**	**43**	**3.0**	**43**	**3.1**	**43**	**3.2**
		650	**43**	**2.7**	**43**	**2.8**	**43**	**2.9**	**43**	**3.0**
		675	**43**	**2.5**	**43**	**2.6**	**43**	**2.7**	**43**	**2.8**
		700	**43**	**2.3**	**43**	**2.4**	**43**	**2.5**	**43**	**2.6**
		725	**43**	**2.2**	**43**	**2.2**	**43**	**2.3**	**43**	**2.4**
		750	**43**	**2.0**	**43**	**2.1**	**43**	**2.2**	**43**	**2.2**
		775	48	3.6	48	3.7	**43**	**2.0**	**43**	**2.1**
U.S.A.	9001 (2744) to 10000 (3048)	600	**43**	**2.7**	**43**	**2.8**	**43**	**2.9**	**43**	**3.0**
		625	**43**	**2.5**	**43**	**2.6**	**43**	**2.6**	**43**	**2.7**
		650	**43**	**2.3**	**43**	**2.4**	**43**	**2.4**	**43**	**2.5**
		675	**43**	**2.1**	**43**	**2.2**	**43**	**2.3**	**43**	**2.3**
		700	48	3.7	**43**	**2.0**	**43**	**2.1**	**43**	**2.2**
		725	48	3.5	48	3.6	48	3.7	**43**	**2.0**

* Orifice numbers shown in **BOLD** are factory-installed.

A10180A

Table 17 – Orifice Size* And Manifold Pressure (in. w.c.) for Gas Input Rate

(TABULATED DATA BASED ON 21,000 BTUH PER BURNER, DERATED 4%/1000 FT (305M) ABOVE SEA LEVEL)

ALTITUDE RANGE ft (m)		AVG. GAS HEAT VALUE AT ALTITUDE (Btu/cu ft)	SPECIFIC GRAVITY OF NATURAL GAS 0.58 Orifice No.	0.58 Manifold Pressure	0.60 Orifice No.	0.60 Manifold Pressure	0.62 Orifice No.	0.62 Manifold Pressure	0.64 Orifice No.	0.64 Manifold Pressure
U.S.A.	0 (0) to 2000 (610)	900	42	3.2	42	3.3	42	3.4	42	3.5
		925	**43**	**3.7**	**43**	**3.8**	42	3.2	42	3.3
		950	**43**	**3.5**	**43**	**3.6**	**43**	**3.7**	**43**	**3.8**
		975	**43**	**3.3**	**43**	**3.4**	**43**	**3.5**	**43**	**3.7**
		1000	44	3.6	**43**	**3.3**	**43**	**3.4**	**43**	**3.5**
		1025	44	3.4	44	3.6	**43**	**3.2**	**43**	**3.3**
		1050	44	3.3	44	3.4	44	3.5	**43**	**3.2**
		1075	45	3.8	44	3.2	44	3.3	44	3.4
		1100	46	3.8	45	3.7	44	3.2	44	3.3
U.S.A.	2001 (611) to 3000 (914)	800	**43**	**3.8**	42	3.2	42	3.3	42	3.4
		825	**43**	**3.5**	**43**	**3.7**	**43**	**3.8**	42	3.2
		850	**43**	**3.3**	**43**	**3.5**	**43**	**3.6**	**43**	**3.7**
		875	**43**	**3.2**	**43**	**3.3**	**43**	**3.4**	**43**	**3.5**
		900	**43**	**3.0**	**43**	**3.1**	**43**	**3.2**	**43**	**3.3**
		925	**43**	**2.8**	**43**	**2.9**	**43**	**3.0**	**43**	**3.1**
		950	**43**	**2.7**	**43**	**2.8**	**43**	**2.9**	**43**	**2.9**
		975	**43**	**2.5**	**43**	**2.6**	**43**	**2.7**	**43**	**2.8**
		1000	**43**	**2.4**	**43**	**2.5**	**43**	**2.6**	**43**	**2.7**
U.S.A.	3001 (915) to 4000 (1219)	775	**43**	**3.5**	**43**	**3.7**	**43**	**3.8**	42	3.2
		800	**43**	**3.3**	**43**	**3.4**	**43**	**3.5**	**43**	**3.7**
		825	**43**	**3.1**	**43**	**3.2**	**43**	**3.3**	**43**	**3.4**
		850	**43**	**2.9**	**43**	**3.0**	**43**	**3.1**	**43**	**3.2**
		875	**43**	**2.8**	**43**	**2.9**	**43**	**3.0**	**43**	**3.1**
		900	**43**	**2.6**	**43**	**2.7**	**43**	**2.8**	**43**	**2.9**
		925	**43**	**2.5**	**43**	**2.6**	**43**	**2.7**	**43**	**2.7**
		950	**43**	**2.4**	**43**	**2.4**	**43**	**2.5**	**43**	**2.6**
U.S.A.	4001 (1220) to 5000 (1524)	750	**43**	**3.3**	**43**	**3.4**	**43**	**3.5**	**43**	**3.6**
		775	**43**	**3.1**	**43**	**3.2**	**43**	**3.3**	**43**	**3.4**
		800	**43**	**2.9**	**43**	**3.0**	**43**	**3.1**	**43**	**3.2**
		825	**43**	**2.7**	**43**	**2.8**	**43**	**2.9**	**43**	**3.0**
		850	**43**	**2.6**	**43**	**2.7**	**43**	**2.8**	**43**	**2.8**
		875	**43**	**2.4**	**43**	**2.5**	**43**	**2.6**	**43**	**2.7**
		900	**43**	**2.3**	**43**	**2.4**	**43**	**2.5**	**43**	**2.5**
		925	**43**	**2.2**	**43**	**2.2**	**43**	**2.3**	**43**	**2.4**
U.S.A.	5001 (1525) to 6000 (1829)	725	**43**	**3.1**	**43**	**3.2**	**43**	**3.3**	**43**	**3.4**
		750	**43**	**2.9**	**43**	**3.0**	**43**	**3.1**	**43**	**3.2**
		775	**43**	**2.7**	**43**	**2.8**	**43**	**2.9**	**43**	**3.0**
		800	**43**	**2.5**	**43**	**2.6**	**43**	**2.7**	**43**	**2.8**
		825	**43**	**2.4**	**43**	**2.5**	**43**	**2.5**	**43**	**2.6**
		850	**43**	**2.2**	**43**	**2.3**	**43**	**2.4**	**43**	**2.5**
		875	**43**	**2.1**	**43**	**2.2**	**43**	**2.3**	**43**	**2.3**
		900	**43**	**2.0**	**43**	**2.1**	**43**	**2.1**	**43**	**2.2**
U.S.A.	6001 (1830) to 7000 (2133)	675	**43**	**3.1**	**43**	**3.2**	**43**	**3.3**	**43**	**3.4**
		700	**43**	**2.9**	**43**	**3.0**	**43**	**3.1**	**43**	**3.2**
		725	**43**	**2.7**	**43**	**2.8**	**43**	**2.9**	**43**	**2.9**
		750	**43**	**2.5**	**43**	**2.6**	**43**	**2.7**	**43**	**2.8**
		775	**43**	**2.3**	**43**	**2.4**	**43**	**2.5**	**43**	**2.6**
		800	**43**	**2.2**	**43**	**2.3**	**43**	**2.3**	**43**	**2.4**
		825	**43**	**2.1**	**43**	**2.1**	**43**	**2.2**	**43**	**2.3**
		850	48	3.7	**43**	**2.0**	**43**	**2.1**	**43**	**2.1**

A10181

(TABULATED DATA BASED ON 21,000 BTUH PER BURNER, DERATED 4%/1000 FT (305M) ABOVE SEA LEVEL)

ALTITUDE RANGE ft (m)		AVG. GAS HEAT VALUE AT ALTITUDE (Btu/cu ft)	SPECIFIC GRAVITY OF NATURAL GAS 0.58 Orifice No.	0.58 Manifold Pressure	0.60 Orifice No.	0.60 Manifold Pressure	0.62 Orifice No.	0.62 Manifold Pressure	0.64 Orifice No.	0.64 Manifold Pressure
U.S.A.	7001 (2134) to 8000 (2438)	650	**43**	**2.9**	**43**	**3.0**	**43**	**3.1**	**43**	**3.2**
		675	**43**	**2.7**	**43**	**2.7**	**43**	**2.8**	**43**	**2.9**
		700	**43**	**2.5**	**43**	**2.6**	**43**	**2.6**	**43**	**2.7**
		725	**43**	**2.3**	**43**	**2.4**	**43**	**2.5**	**43**	**2.5**
		750	**43**	**2.1**	**43**	**2.2**	**43**	**2.3**	**43**	**2.4**
		775	**43**	**2.0**	**43**	**2.1**	**43**	**2.2**	**43**	**2.2**
		800	48	3.6	48	3.7	**43**	**2.0**	**43**	**2.1**
		825	48	3.3	48	3.5	48	3.6	48	3.7
U.S.A.	8001 (2439) to 9000 (2743)	625	**43**	**2.7**	**43**	**2.7**	**43**	**2.8**	**43**	**2.9**
		650	**43**	**2.5**	**43**	**2.5**	**43**	**2.6**	**43**	**2.7**
		675	**43**	**2.3**	**43**	**2.4**	**43**	**2.4**	**43**	**2.5**
		700	**43**	**2.1**	**43**	**2.2**	**43**	**2.3**	**43**	**2.3**
		725	48	3.7	**43**	**2.0**	**43**	**2.1**	**43**	**2.2**
		750	48	3.5	48	3.6	48	3.7	**43**	**2.0**
		775	49	3.8	48	3.4	48	3.5	48	3.6
U.S.A.	9001 (2744) to 10000 (3048)	600	**43**	**2.4**	**43**	**2.5**	**43**	**2.6**	**43**	**2.7**
		625	**43**	**2.3**	**43**	**2.3**	**43**	**2.4**	**43**	**2.5**
		650	**43**	**2.1**	**43**	**2.2**	**43**	**2.2**	**43**	**2.3**
		675	48	3.6	48	3.8	**43**	**2.1**	**43**	**2.1**
		700	48	3.4	48	3.5	48	3.6	48	3.7
		725	49	3.7	49	3.8	48	3.4	48	3.5

* Orifice numbers shown in **BOLD** are factory-installed.

A10181A

Adjust Temperature Rise

5. Set temperature rise. The furnace must operate within the temperature rise ranges specified on the furnace rating plate. Do not exceed temperature rise range specified on unit rating plate. Determine the temperature rise as follows:

⚠ CAUTION

FURNACE DAMAGE HAZARD

Failure to follow this caution may result in:

- Overheating the heat exchangers or condensing flue gases in heat exchanger areas not designed for condensate.
- Shortened furnace life
- Component damage.

Temperature rise must be within limits specified on furnace rating plate. Recommended operation is at midpoint of rise range or slightly above.

NOTE: Blower access door must be installed when taking temperature rise reading. Leaving blower access door off will result in incorrect temperature measurements.

a. Place thermometers in return and supply ducts as close to furnace as possible. Be sure thermometers do not see radiant heat from heat exchangers. Radiant heat affects temperature rise readings. This practice is particularly important with straight-run ducts.
b. When thermometer readings stabilize, subtract return-air temperature from supply-air temperature to determine air temperature rise.

NOTE: If the temperature rise is outside this range, first check:

(1.) Gas input for heating operation.
(2.) Derate for altitude if applicable.
(3.) Return and supply ducts for excessive restrictions causing static pressures greater than 0.50-in. w.c.

⚠ WARNING

ELECTRICAL SHOCK HAZARD

Failure to follow this warning could result in personal injury or death.

Blower access door switch opens 115-V power to control. No component operation can occur unless switch is closed. Caution must be taken when manually closing this switch.

c. Adjust air temperature rise by adjusting blower speed. Increase blower speed to reduce temperature rise. Decrease blower speed to increase temperature rise
d. Turn thermostat down below room temperature and remove blower access door.
e. Refer to the **FURNACE CONTROL PROGRAMMING AND NAVIGATION** section of this manual for instructions on adjusting the blower speed.
f. Repeat steps a through e until temperature rise is within range on rating plate.
g. When correct input rate and temperature rise is achieved, turn gas valve ON/OFF switch to OFF.

⚠ WARNING

FIRE HAZARD

Failure to follow this warning could result in personal injury, death, and/or property damage.

Reinstall manifold pressure tap plug in gas valve to prevent gas leak.

h. Remove manometer or similar device from gas valve.
i. Reinstall manifold pressure tap plug in gas valve.

⚠ WARNING

FURNACE OVERHEATING HAZARD

Failure to follow this caution may result in reduced furnace life.

Recheck temperature rise. It must be within limits specified on the rating plate. Recommended operation is at the mid-point of rise range or slightly above.

6. Adjust heating blower-OFF delay. The blower-OFF delay has four adjustable settings from 90 sec to 180 sec. Refer to the **FURNACE CONTROL PROGRAMMING AND NAVIGATION** section of this manual for instructions. Factory off delay setting is 120 sec.
7. Set airflow CFM for cooling. See Table 9-Air Delivery-CFM (with filter).
8. Adjust cooling blower-OFF delay. Refer to the **FURNACE CONTROL PROGRAMMING AND NAVIGATION** section of this manual for instructions.

Check Safety Controls

The flame sensor, gas valve, and pressure switch were all checked in the Start-up procedure section as part of normal operation.

1. Check Main Limit Switch(es)
   This control shuts off combustion control system and energizes air-circulating blower motor, if furnace overheats. By using this method to check limit control, it can be established that limit is functioning properly and will operate if there is a restricted duct system or motor failure. If limit control does not function during this test, cause must be determined and corrected.
   a. Run furnace for at least 5 minutes.
   b. Gradually block off return air with a piece of cardboard or sheet metal until the limit trips.
   c. Unblock return air to permit normal circulation.
   d. Burners will re-light when furnace cools down.
2. Check draft safeguard switch.
   The purpose of this control is to cause the safe shutdown of the furnace during certain blocked vent conditions.
   a. Verify vent pipe is cool to the touch.
   b. Disconnect power to furnace and remove vent connector from furnace vent elbow.
   c. Restore power to furnace and set room thermostat above room temperature.
   d. After normal start-up, allow furnace to operate for 2 minutes, then block vent elbow in furnace 80 percent of vent area with a piece of flat sheet metal.
   e. Furnace should cycle off within 2 minutes. If gas does not shut off within 2 minutes, determine reason draft safeguard switch did not function properly and correct condition.
   f. Remove blockage from furnace vent elbow.
   g. Switch will auto-reset when it cools.
   h. Re-install vent connector.

NOTE: Should switch remain open longer than 3 minutes, furnace control board will lockout the furnace for 3 hours. To reset furnace control board, turn thermostat below room temperature or from HEAT to OFF and turn 115-V power OFF, then back ON.

3. Check Pressure Switch
   This control proves operation of the draft inducer blower.
   a. Turn off 115-V power to furnace.
   b. Disconnect inducer motor lead wires from wire harness.
   c. Turn on 115-V power to furnace.
   d. Set thermostat to “call for heat” and wait 1 minute. When pressure switch is functioning properly, hot surface igniter should NOT glow and control diagnostic light flashes a status code (3 1 . 1). If hot surface igniter glows when inducer motor is disconnected, shut down furnace immediately.
   e. Determine reason pressure switch did not function properly and correct condition.
   f. Turn off 115-V power to furnace.
   g. Reconnect inducer motor wires, replace outer door, and turn on 115-V power.
   h. Blower will run for 90 sec before beginning the call for heat again.
   i. Furnace should ignite normally.

Checklist

- Put away tools and instruments. Clean up debris.
- Check Input/Output gas pressure
- Check heat rise per application static pressure
- Cooling CFM per application static pressure
- Verify that blower-OFF delay time is selected as desired.
- Verify that blower and burner access doors are properly installed.
- Cycle test furnace with room thermostat.
- Check operation of accessories per manufacturer’s instructions.
- Review User’s Guide with owner.
- Attach literature packet to furnace.

SERVICE AND MAINTENANCE PROCEDURES

Untrained personnel can perform basic maintenance functions such as cleaning and replacing air filters. All other operations must be performed by trained service personnel. A qualified service person should inspect the furnace once a year.

⚠ WARNING

FIRE, INJURY, OR DEATH HAZARD

Failure to follow this warning could result in personal injury, death and/or property damage.

The ability to properly perform maintenance on this equipment requires certain knowledge, mechanical skills, tools, and equipment. If you do not possess these, do not attempt to perform any maintenance on this equipment other than those procedures recommended in the User’s Manual.

⚠ WARNING

ELECTRICAL SHOCK, FIRE OR EXPLOSION HAZARD

Failure to follow this warning could result in personal injury or death.

Before installing, modifying, or servicing system, main electrical disconnect switch must be in the OFF position and install a lockout tag. There may be more than one disconnect switch. Lock out and tag switch with a suitable warning label. Verify proper operation after servicing.

⚠ CAUTION

ELECTRICAL OPERATION HAZARD

Failure to follow this caution may result in improper furnace operation or failure of furnace.

Label all wires prior to disconnection when servicing controls. Wiring errors can cause improper and dangerous operation.

GENERAL

These instructions are written as if the furnace is installed in an upflow application. An upflow furnace application is where the blower is located below the combustion and controls section of the furnace, and

conditioned air is discharged upward. Since this furnace can be installed in any of the 4 positions (see Fig. 3), you must revise your orientation to component location accordingly.

ELECTRICAL CONTROLS AND WIRING

The electrical ground and polarity for 115-V wiring must be properly maintained. Refer to Fig. 24 for field wiring information and to Fig. 46 for furnace wiring information.

WARNING

ELECTRICAL OPERATION HAZARD

Failure to follow this warning could result in personal injury or death.

There may be more than one electrical supply to the furnace. Check accessories and cooling unit for additional electrical supplies that must be shut off during furnace servicing. Lock out and tag switch with a suitable warning label.

NOTE: If the polarity is not correct, the STATUS LED on the control will flash rapidly and Status code (10 . 1) is displayed. This will prevent the furnace from heating. The control system also requires an earth ground for proper operation of the control and flame-sensing electrode.

The 24-V circuit contains an automotive-type, 3-amp. fuse located on the control (see Fig. 28). Any shorts of the 24-V wiring during installation, service, or maintenance will cause this fuse to blow. If fuse replacement is required, use ONLY a 3-amp. fuse. The control LED will display status code (24 . 1) when fuse needs to be replaced.

Proper instrumentation is required to service electrical controls. The control in this furnace is equipped with a Status Code LED (Light-Emitting Diode) and Major/Minor 3 digit codes to aid in installation, servicing, and troubleshooting. Status codes can be viewed at the sight glass in blower access door. The furnace control LED is either ON continuously, rapid flashing, or a code composed of 2 digits. The major status code is displayed on the LED indicator through the door with the first digit being the number of short flashes and the second digit being the number of long flashes. The major status code is displayed in the first 2 digits of the display. The minor status code is displayed in the third digit.

For an explanation of status codes, refer to service label located on blower access door, or Fig. 45 and the troubleshooting guide by scanning the QR code or see Fig. 51 for a brief Troubleshooting Guide.

Retrieving Stored Fault Codes

The stored status code will not be erased from the control memory, if 115-V or 24-V power is interrupted. See the Service Label Fig. 45 for more information.

1. To retrieve the last 7 fault codes, proceed with the following:

NOTE: NO thermostat signal may be present at control, and all blower-OFF delays must be completed.

a. Leave 115-V power to furnace turned on.
b. Remove outer access door.
c. Remove the inner blower door.
d. Depress blower door switch to energize the control board.

CAUTION

SHOCK HAZARD

Failure to follow this caution could result in personal injury.

Do not tape or permanently allow the door switch to be bypassed. Temporarily press the door switch with one hand while accessing the service buttons with your other hand. Do not touch uninsulated electrical components.

e. Press menu/select button until (FLt) is displayed.
f. Press Next/Option button to cycle through the fault history. Faults remain in memory for 72 hours of powered operation after the last fault occurs. Faults may be manually cleared by selecting (CLr) with the menu/select button.

CARE AND MAINTENANCE

WARNING

FIRE OR EXPLOSION HAZARD

Failure to follow this warning could result in personal injury, death and/or property damage.

Never store anything on, near, or in contact with the furnace, such as:

1. Spray or aerosol cans, rags, brooms, dust mops, vacuum cleaners, or other cleaning tools.
2. Soap powders, bleaches, waxes or other cleaning compounds, plastic or plastic containers, gasoline, kerosene, cigarette lighter fluid, dry cleaning fluids, or other volatile fluids.
3. Paint thinners and other painting compounds, paper bags, or other paper products.

For continuing high performance and to minimize possible equipment failure, periodic maintenance must be performed on this equipment. Consult your local dealer about proper frequency of maintenance and the availability of a maintenance contract.

WARNING

ELECTRICAL SHOCK AND FIRE HAZARD

Failure to follow this warning could result in personal injury, death or property damage.

Turn off the gas and electrical supplies to the unit and install lockout tag before performing any maintenance or service. Follow the operating instructions on the label attached to the furnace.

WARNING

CARBON MONOXIDE POISONING AND FIRE HAZARD

Failure to follow this warning could result in personal injury, death and/or property damage.

Never operate unit without a filter or with filter access door removed.

CAUTION

CUT HAZARD

Failure to follow this caution may result in personal injury.

Sheet metal parts may have sharp edges or burrs. Use care and wear appropriate protective clothing, safety glasses and gloves when handling parts and servicing furnaces.

The minimum maintenance on this furnace is as follows:

1. Check and clean/replace air filter each month or more frequently if required. Replace if torn.
2. Check blower motor and wheel for cleanliness each heating and cooling season. Clean as necessary.
3. Check electrical connections for tightness and controls for proper operation each heating season. Service as necessary.
4. Inspect burner compartment before each heating season for rust, corrosion, soot or excessive dust. If necessary, have furnace and burner serviced by a qualified service agency.

5. Inspect the vent pipe/vent system before each heating season for rust, corrosion, water leakage, sagging pipes or broken fittings. Have vent pipes/vent system serviced by a qualified service agency.
6. Inspect any accessories attached to the furnace such as a humidifier or electronic air cleaner. Perform any service or maintenance to the accessories as recommended in the accessory instructions.

Cleaning and/or Replacing Air Filter

The air filter arrangement will vary depending on the application. The filter is exterior to the furnace casing.

NOTE: If the filter has an airflow direction arrow, the arrow must point towards the blower.

To clean or replace filters, proceed as follows:

⚠ WARNING

ELECTRICAL SHOCK, FIRE OR EXPLOSION HAZARD

Failure to follow this warning could result in personal injury or death, or property damage.

Before installing, modifying, or servicing system, main electrical disconnect switch must be in the OFF position and install a lockout tag. There may be more than one disconnect switch. Lock out and tag switch with a suitable warning label. Verify proper operation after servicing. Always reinstall access doors after completing service and maintenance.

1. Turn off electrical supply to furnace before removing filter access door.
2. Remove filter cabinet door.
3. Slide filter out of cabinet.
4. If equipped with permanent, washable 3/4-in. (19 mm) filter, clean filter by spraying cold tap water through filter in opposite direction of airflow. Rinse filter and let dry. Oiling or coating of the filter is not recommended. See Table 18 for size information.
5. If equipped with factory-specified disposable media filter, replace only with media filter having the same part number and size. For expandable replacement media, refer to the instructions included with the replacement media.
6. Slide filter into cabinet.
7. Replace filter cabinet door.
8. Turn on electrical supply to furnace.

Table 18 – Filter Size Information (In. / mm)

FURNACE CASING WIDTH In. (mm)	FILTER SIZE (In. / mm)		FILTER TYPE*
	Side Return	Bottom Return	
14-1/2 (368)	16 x 25 x 3/4 (406 x 635 x 19)	14 x 25 x 3/4 (356 x 635 x 19)	Washable
17-1/2 (445)	16 X 25 X 3/4 (406 x 635 x 19)	16 X 25 X 3/4 (406 x 635 x 19)	Washable
21 (533)	16 x 25 x 3/4 (406 x 635 x 19)	20 X 25 X 3/4 (508 x 635 x 19)	Washable
24 (610)	16 x 25 x 3/4 (406 x 635 x 19)	24 X 25 X 3/4 (610 x 635 x 19)	Washable

*. Recommended

Blower Motor and Wheel Maintenance

⚠ WARNING

ELECTRICAL SHOCK HAZARD

Failure to follow this warning could result in personal injury or death.

Blower access door switch opens 115-V power to control. No component operation can occur unless switch is closed. Caution must be taken when manually closing this switch for service purposes.

NOTE: The blower wheel should not be dropped or bent as balance will be affected. The following steps should be performed by a qualified service agency.

To ensure long life and high efficiency, clean accumulated dirt and grease from blower wheel and motor annually.

The inducer and blower motors are pre-lubricated and require no additional lubrication. These motors can be identified by the absence of oil ports on each end of the motor. The following steps should be performed by a qualified service agency.

Clean blower motor and wheel as follows:

1. Turn off electrical supply to furnace.
2. Remove outer door.
3. For downflow or horizontal furnaces having vent pipes within the furnace that pass in front of the blower access door:
   a. Disconnect vent connector from furnace vent elbow.
   b. Disconnect and remove short piece of vent pipe from within furnace.
4. Remove two screws from blower access door and remove blower access door.
5. All factory wires can be left connected, but field thermostat connections may need to be disconnected depending on their length and routing.

NOTE: The blower wheel should not be dropped or bent as balance will be affected.

6. Remove two screws holding blower assembly to blower deck and slide blower assembly out of furnace.
7. Clean blower wheel and motor using a vacuum with soft brush attachment. Blower wheel blades may be cleaned with a small paint or flux brush. Do not remove or disturb balance weights (clips) on blower wheel blades.
8. Vacuum any loose dust from blower housing, wheel and motor.
9. If a greasy residue is present on blower wheel, remove wheel from the blower housing and wash it with an appropriate degreaser.

NOTE: Before disassembly, mark blower motor, and blower housing so motor and each arm is positioned at the same location during reassembly.

To remove wheel:

   a. Disconnect power choke wires (if used) and ground wire attached to blower housing.
   b. Remove screws securing cutoff plate and remove cutoff plate from housing.
   c. Loosen set screw holding blower wheel on motor shaft (160+/-20 in.-lb. when reassembling).
   d. Remove bolts holding motor to blower housing and slide motor out of wheel (40+/-10 in.-lb. when reassembling).
   e. Remove blower wheel from housing.
   f. Clean wheel and housing.

10. Reassemble motor and blower by reversing steps 9f through 11a, finishing with 9a. Be sure to reattach ground wire to the blower housing.

11. Verify that blower wheel is centered in blower housing and set screw contacts the flat portion of the motor shaft. Loosen set screw on blower wheel and reposition if necessary.
12. Spin the blower wheel by hand to verify that the wheel does not rub on the housing.
13. Reinstall blower assembly in furnace.
14. Reinstall two screws securing blower assembly to blower deck.
15. Refer to furnace wiring diagram, and connect thermostat leads if previously disconnected.
16. To check blower for proper rotation:
    a. Turn on electrical supply.

WARNING

ELECTRICAL SHOCK HAZARD

Failure to follow this warning could result in personal injury, or death.

Blower access door switch opens 115-V power to furnace control. No component operation can occur unless switch is closed. Exercise caution to avoid electrical shock from exposed electrical components when manually closing this switch for service purposes.

    b. Manually close blower access door switch.

NOTE: If thermostat terminals are jumpered at the time blower access door switch is closed, blower will run for 90 sec before beginning a heating or cooling cycle.

    c. Perform component self-test as shown on page 31 or at the bottom of the SERVICE label (Fig. 45) which also located on the front of blower access door.
    d. Verify blower is rotating in the correct direction.
17. If furnace is operating properly, RELEASE BLOWER ACCESS DOOR SWITCH. Remove any jumpers or reconnect any disconnected thermostat leads. Replace blower access door.
18. Downflow or horizontal furnaces with vent pipe through furnace only:
    a. Install and connect short piece of vent pipe inside furnace to existing vent.
    b. Connect vent connector to vent elbow.
19. Reinstall outer door.
20. Cycle furnace through one complete heating and cooling cycle. Verify the furnace temperature rise as shown in “Adjustments” Section. Adjust temperature rise as shown in “Adjustments” Section. If outdoor temperature is below 70°F, (21°C) turn off circuit breaker to outdoor unit before running furnace in the cooling cycle. Turn outdoor circuit breaker on after completing cooling cycle.

Cleaning Heat Exchanger

The following steps should be performed by a qualified service agency:

NOTE: If the heat exchangers get a heavy accumulation of soot and carbon, they should be replaced rather than trying to clean them thoroughly. A heavy build-up of soot and carbon indicates that a problem exists which needs to be corrected, such as improper adjustment of manifold pressure, insufficient or poor quality combustion air, incorrect size or damaged manifold orifice(s), improper gas, or a restricted heat exchanger. Action must be taken to correct the problem.

If it becomes necessary to clean the heat exchangers because of dust or corrosion, proceed as follows:

1. Turn OFF gas and electrical power to furnace.
2. Remove outer access door.
3. Disconnect vent connector from furnace vent elbow.
4. For downflow or horizontal furnace having an internal vent pipe, remove internal vent pipe within the casing.
5. Disconnect wires to the following components. Mark wires to aid in reconnection of (be careful when disconnecting wires from switches because damage may occur):
    a. Draft safeguard switch.
    b. Inducer motor.
    c. Pressure switch(es).
    d. Limit over-temperature switch.
    e. Gas valve.
    f. Hot surface igniter.
    g. Flame-sensing electrode.
    h. Flame rollout switches.
6. Remove screws that fasten the collector box assembly to the cell panel. Be careful not to damage the collector box. Inducer assembly and elbow need not be removed from collector box.
7. Disconnect gas line from gas manifold.
8. Remove the 5 screws that attach the burner assembly to the cell panel. The gas valve and individual burners need not be removed from support assembly. Remove NOx baffles if installed.

NOTE: Be very careful when removing burner assembly to avoid breaking igniter. See Fig. 48 and Fig. 49 for correct igniter location.

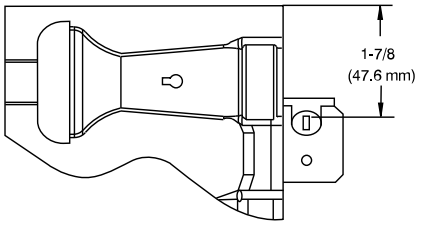

A05026

Fig. 48 – Igniter Position-Top View

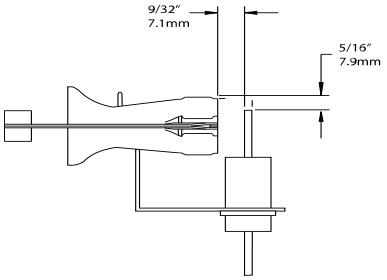

A05025

Fig. 49 – Igniter Position-Side View

NOTE: The materials needed in item 9 can usually be purchased at local hardware stores.

9. Using a field-provided 25-caliber rifle cleaning brush; a 36-in. (914 mm) long, 1/4” (6 mm) diameter steel spring cable; and a variable speed, reversible electric drill; and a vacuum cleaner, clean cells as follows:
    a. Remove metal screw fitting from wire brush to allow insertion into cable.
    b. Insert the twisted wire end of brush into end of spring cable, and crimp tight with crimping tool or crimp by striking with ball-peen hammer. TIGHTNESS IS VERY IMPORTANT.
        (1.) Attach variable-speed, reversible drill to the end of spring cable (end opposite brush).
        (2.) Insert brush end of cable into the outlet opening of cell and slowly rotate with drill. DO NOT force cable. Gradually insert cable into upper pass of cell (see Fig. 50).

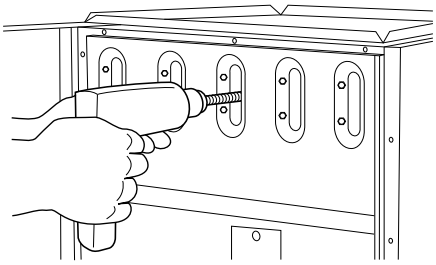

A91252

Fig. 50 – Cleaning Heat Exchanger Cell

(3.) Work cable in and out of cell 3 or 4 times to obtain sufficient cleaning. DO NOT pull cable with great force. Reverse drill and gradually work cable out.
(4.) Insert brush end of cable in burner inlet opening of cell, and proceed to clean 2 lower passes of cell in same manner as upper pass.
(5.) Repeat foregoing procedures until each cell in furnace has been cleaned.
(6.) Using vacuum cleaner, remove residue from each cell.
(7.) Using vacuum cleaner with soft brush attachment, clean burner assembly.
(8.) Clean flame sensor with fine steel wool.
(9.) Install NOx baffles (if removed).
(10.) Reinstall burner assembly. Center burners in cell openings.

10. Remove old sealant from cell panel and collector box flange.
11. Spray releasing agent on the heat exchanger cell panel where collector box assembly contacts cell panel.
12. Apply new sealant to flange of collector box and attach to cell panel using existing screws, making sure all screws are secure.
13. Reconnect wires to the following components. (Use connection diagram on wiring label, if wires were not marked for reconnection locations.):
    a. Draft safeguard switch.
    b. Inducer motor.
    c. Pressure switch(es).
    d. Limit over-temperature switch.
    e. Gas valve.
    f. Hot surface igniter.
    g. Flame-sensing electrode.
    h. Flame rollout switches.
    i. Install NOx baffles (if removed).
14. Reinstall internal vent pipe, if applicable.
15. Reinstall vent connector on furnace vent elbow. Securely fasten vent connector to vent elbow with 2 field-supplied, corrosion-resistant, sheet metal screws located 180° apart.
16. Replace blower access door only, if it was removed.
17. Set thermostat above room temperature and check furnace for proper operation.
18. Verify blower airflow and speed changes between heating and cooling.

⚠ WARNING

FIRE OR EXPLOSION HAZARD

Failure to follow this warning could result in personal injury, death and/or property damage.

Never purge a gas line into a combustion chamber. Never test for gas leaks with an open flame. Use a commercially available soap solution made specifically for the detection of leaks to check all connections.

19. Check for gas leaks.
20. Replace outer access door.

SEQUENCE OF OPERATION

NOTE: Furnace control must be grounded for proper operation or control will lock out. Control is grounded through green/yellow wire routed to gas valve and manifold bracket screw.

Using the schematic diagram, follow the sequence of operation through the different modes. Read and follow the wiring diagram very carefully.

NOTE: If a power interruption occurs during a call for heat (W), the control will start a 90-sec blower-only ON period two seconds after power is restored, if the thermostat is still calling for gas heating. The amber LED light will flash code 12 and display will show (12 . 1) during the 90-sec period, after which the LED will be ON continuous, as long as no faults are detected. After the 90-sec period, the furnace will respond to the thermostat normally.

The blower door must be installed for power to be conducted through the blower door interlock switch ILK to the furnace control CPU, transformer TRAN, inducer motor IDM, blower motor BLWM, hot-surface igniter HSI, and gas valve GV.

1. **Heating**
   The wall thermostat "calls for heat," closing the R-to-W circuit. The furnace control performs a self-check, verifies the pressure switch contacts PRS are open, and starts the inducer motor IDM.
   a. **Inducer Prepurge Period** – As the inducer motor IDM comes up to speed, the pressure switch contacts PRS close, 24 VAC power is supplied for a field installed humidifier at the HUM terminal and the control begins a 15-sec prepurge period.
   b. **Igniter Warm-Up** – At the end of the prepurge period, the Hot-Surface igniter HSI is energized for a 17-second igniter warm-up period.
   c. **Trial-for-Ignition Sequence** – When the igniter warm-up period is completed, the main gas valve relay contacts GVR close to energize the gas valve GV, the gas valve opens, The gas valve GV permits gas flow to the burners where it is ignited by the HSI. Five seconds after the GVR closes, a 2-second flame proving period begins. The HSI igniter will remain energized until the flame is sensed or until the 2-second flame proving period begins.
   d. **Flame-Proving** – When the burner flame is proved at the flame-proving sensor electrode FSE, the furnace control CPU begins the blower-ON delay period and continues to hold the gas valve GV open. If the burner flame is not proved within two seconds, the control CPU will close the gas valve GV, and the control CPU will repeat the ignition sequence for up to three more Trials-For-Ignition before going to Ignition-Lockout. **Lockout will be reset** automatically after three hours or by momentarily interrupting 115 vac power to the furnace, or by interrupting 24 vac power at SEC1 or SEC2 to the furnace control CPU (not at W, G, R, etc.) If flame is proved when flame should not be present, the furnace control CPU will lock out of Gas-Heating mode and operate the inducer motor IDM until flame is no longer proved.
   e. **Blower-ON Delay** – If the burner flame is proven, the blower motor is turned on at HEAT speed 25 sec after the gas valve GV is energized.
   Simultaneously, the electronic air cleaner terminal EAC-1 is energized and remains energized as long as the blower motor BLWM is energized.
   f. **Heat-OFF Delay** – When the thermostat is satisfied, the R-to-W circuit is opened, de-energizing the gas valve GV, stopping gas flow to the burners, and de-energizing the 24-V humidifier terminal 24VAC HUM. The inducer motor IDM will remain ON for a 5-second post-purge period. Then turn off the inducer motor and HUM (115-V) humidifier terminal. The blower motor

BLWM and air cleaner terminal EAC 1 will remain energized for 90, 120, 150, or 180 seconds (depending on the HEAT-OFF delay selection). The furnace control CPU is factory-set for a 120-second Heat-Off Delay.

2. **Cooling Mode**
(See Fig. 29 for thermostat connections.) The thermostat closes the R-to-Y circuits. The R-to-Y circuit starts the outdoor unit, and the R-to-Y circuits start the furnace blower motor BLWM on COOL speed. The electronic air cleaner terminal EAC-1 is energized with 115 vac when the blower motor BLWM is operating. When the thermostat is satisfied, the R-to-Y circuits are opened. The outdoor unit will stop, and the furnace blower motor BLWM will continue operating on the COOL speed for an additional 5, 30, or 90 seconds (depending on the cooling blower-OFF delay selection). The furnace CPU is factory set for a 90 second cooling blower-OFF delay (see Fig. 28).
3. **Continuous Fan Mode**
When the R-to-G circuit is closed by the thermostat, the blower motor BLWM will operate at the continuous-blower speed selected. Terminal EAC-1 is energized as long as the blower motor BLWM is ON.
During a call for heat, the blower BLWM will stop during igniter warm-up (17 sec), ignition, and blower-ON delay (25 sec), allowing the furnace heat exchangers to heat up more quickly, then restarts at the end of the blower-ON delay period at HEAT speed. When the thermostat “calls for cooling”, the blower motor BLWM will continue to operate at COOL speed. When the thermostat is satisfied, the blower motor BLWM will continue to operate on COOL speed based on the cooling blower-OFF delay setting before reverting back to continuous fan speed. When the R-to-G circuit is opened, the blower motor BLWM will continue operating for an additional 5 sec, if no other function requires blower motor BLWM operation.
4. **Heat Pump**
When installed with a heat pump, the furnace control automatically changes the timing sequence to avoid long blower off times during demand defrost cycles. When the R-to-W-and-Y or R-to-W-and-Y-and-G circuits are energized the furnace control CPU will continue to turn on the blower motor BLWM at HEAT speed, and begin a heating cycle. The blower motor BLWM will remain on until the end of the prepurge period, then shut off for 24 sec then come back on at HEAT speed. When the W input signal disappears, the furnace control begins a normal inducer post-purge period and the blower switches to COOL speed after a 3 sec delay. If the R-to-W-and-Y-and-G signals disappear at the same time, the blower motor BLWM will remain on for the selected blower- OFF delay period. If the R-to-W-and-Y signals disappear, leaving the G signal, the blower motor BLWM will continue running the blower motor at CONTINUOUS FAN speed after the selected heating blower-OFF delay period is completed.

Wiring Diagram

Fig. 46 shows a schematic for the furnace wiring diagram.

Troubleshooting

Refer to the service label (see Fig. 45). The Troubleshooting Guide (see Fig. 51) can be a useful tool in isolating furnace operation problems. Beginning with the word “Start,” answer each question and follow the appropriate arrow to the next item. The Guide will help to identify the problem or failed component. After replacing any component, verify correct operation sequence.

TROUBLESHOOTING

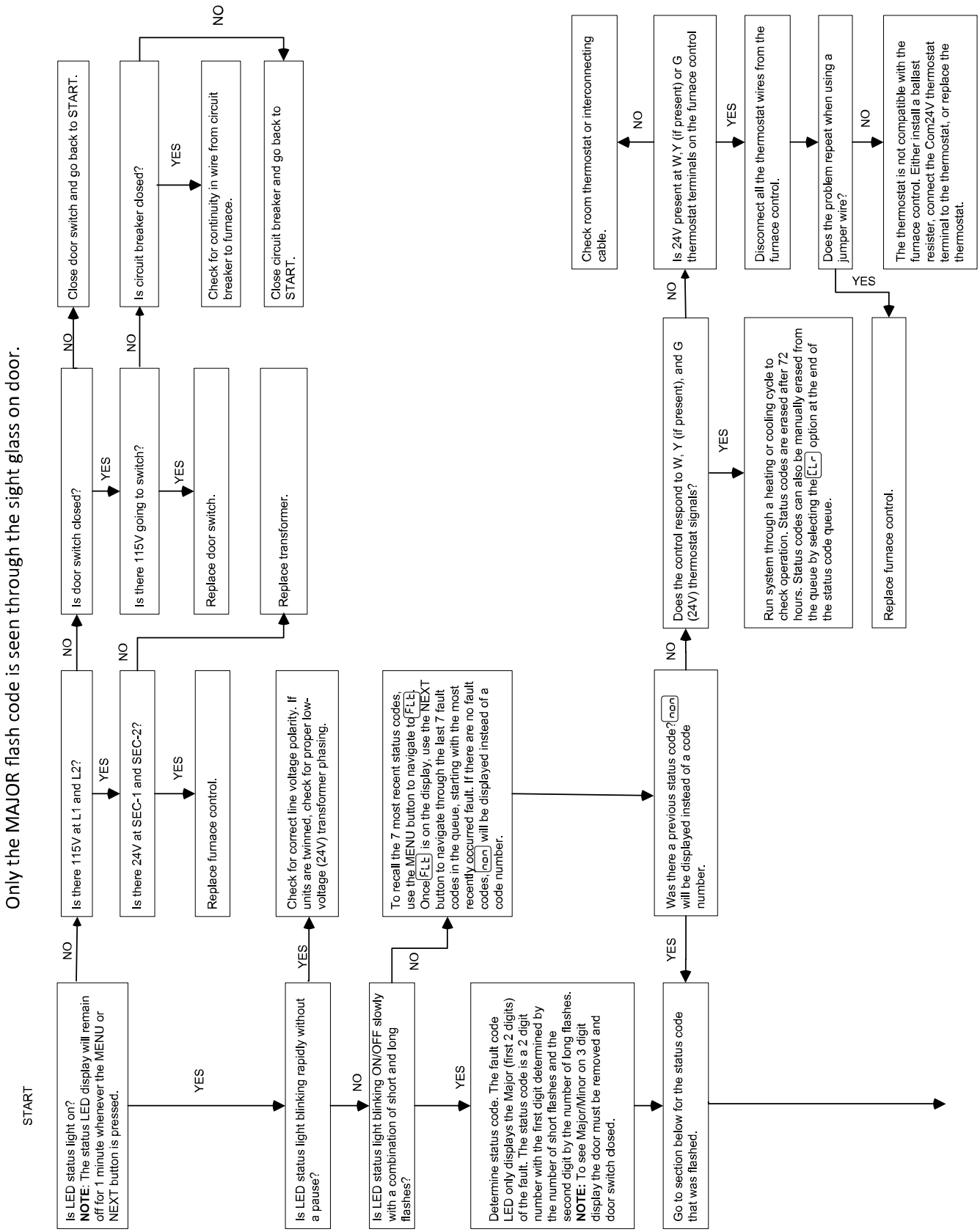

A221116

Only the MAJOR flash code is seen through the sight glass on door.

10.1 L1 POLARITY FAULT - Rapid flash LED. Polarity of incoming 115V power is reversed.

Check for:
- Correct line voltage (115V) wiring polarity at each junction.
- If units are twinned, check for proper low-voltage (24V) transformer phasing.

12.1 "W" ON at power up – Normal operation. Blower runs for 90 seconds, if unit is powered up during a call for heat (R-W closed) or when (R-W opens) during the blower on-delay period.

13.1 LIMIT CIRCUIT LOCKOUT – Lockout occurs If the limit, draft safeguard, flame rollout, or blocked vent switch*(if used) is open longer than 3 minutes. Control will auto-reset after 3 hours. See code 33.

14.1 IGNITION LOCKOUT – System failed to ignite gas and prove flame in 4 attempts. Control will auto-reset after 3 hours. See status code 34.1.

14.2 FLAME LOST LOCKOUT – Flame signal was lost 3 times after heating blower on delay. Control will auto-reset after 3 hours. See status code 34.3.

14.3 FLAME LOST LOCKOUT – Flame signal was lost 7 times during a single heat request. See status code 34.2 to 34.3.

Check for (applies to all):
- Correct manifold pressure and gas firing rate
- Gas inlet pressure fluctuations
- See Code 34 for additional help

21.1 GAS HEATING LOCKOUT - 24VAC sensed on gas valve when shouldn't be. Turn off power and wait 5 minutes to retry.

Check for:
- Stuck closed gas valve relay on control.
- Miswire or short on gas valve wire.

22.1 FALSE FLAME – Flame is proved while gas valve is de-energized. Inducer will run until faut is cleared.

Check for:
- Stuck open or leaky gas valve.

23.1 STUCK MAIN pressure switch

Check for:
- Obstructed pressure tube.
- Pressure switch stuck closed.

31.1 OPEN MAIN PRESSURE SWITCH - If open longer than 5 minutes, inducer shuts off for 15 minutes before retry. If opens during blower on-delay period, blower will come on for the selected blower off-delay.

Check for:
- Proper vent sizing
- Low inducer voltage (115V).
- Low inlet gas pressure (if LGPS used)
- Inadequate combustion air supply
- Disconnected or obstructed pressure tubing
- Defective inducer motor
- Defective pressure switch
- Excessive wind
- Restricted

33.1 A SWITCH HAS OPENED IN THE MAIN LIMIT – Indicates the limit, draft safeguard, flame rollout, or blocked vent shutoff switch* (if used) is open. Blower will run for 4 minutes or until open switch remakes whichever is longer. If open longer than 3 minutes, code changes to lockout #13. If open less than 3 min. status code #33 continues to flash until blower shuts off. Flame rollout switch and BVSS requires manual reset.

Check for:
- Dirty filter or restricted duct system
- Loose blower wheel
- Defective switch or connections
- Defective blower motor or capacitor
- Inadequate combustion air supply (flame rollout switch open)
- Restricted vent
- Proper vent sizing
- Excessive wind

* Blocked vent shutoff switch used in Chimney Adapter Kit

45.1 CONTROL FAILURE – flame circuit fault, memory mismatch or sequence error.

45.2 CONTROL FAILURE – gas valve relay will not close.

45.3 CONTROL FAILURE – EEPROM memory issue.

For code 45, cycle power, if code 45 repeats, replace control.

46.1 MOMENTARY LOSS of power – Heating operation will stop and will restart once the power fluctuation is resolved.

A230343

A221118

Fig. 51 – Troubleshooting Guide

GAS FURNACE CHECKLIST

Installation Date: _____

Equipment		
	Model	Serial #
Furnace		
Thermostat		
Humidifier		
Indoor Coil		
Outdoor Unit		

Furnace Location_____ Installed altitude _____

Furnace Orientation: ____Upflow ___Downflow ___Horizontal Right ___Horizontal Left

Gas Adjustment

LOCAL GAS HEAT CONTENT_____(btu/cu. ft.) SPECIFIC GRAVITY_____/cu. ft.
(contact your local gas utility-not required for propane)

INLET SUPPLY PRESSURE** _____ in. W.C. ORIFICE #_____
MANIFOLD PRESSURE: High fire_____ in. W.C. Low fire_____ in. W.C.
**Supply pressure should be checked with furnace and all other gas appliances running

FIRING RATE: (CLOCKED METER FOR NAT. GAS – assure only furnace is running)
Firing rate = heat content (btu/cu. ft.) X size of the dial (cu. ft/rev) X # of rev. per 60 sec (rev/sec) X 3600 (sec/hr)
Example- (1050 btu/cu. ft.) X (0.5 cu. f ./rev.) X (2 revs./60sec) X (3600 sec/hr)= 63,000 btu/hr
OR use the "Gas Rate" chart in the startup and adjustment section of the installation manual

HIGH HEAT_____ btu/hr LOW HEAT _____ btu/hr

LEAVING AIR TEMPERATURE _____(F) high _____ (F) low

RETURN AIR TEMPERATURE _____(F) high _____ (F) low

TEMPERATURE RISE _____(F) high _____ (F) low

Temperature rise is equal to the supply air temp minus the return air temp @ steady state operation.
The supply temperature should be measured away from the line of sight of the Heat Exchanger

+90 % VENTING SYSTEM

Pipe Dia_____ # of Elbows_____ Total Length _____ft.

Termination Type: (circle one) Concentric 2 pipe (std)

Termination Locat on: (circle one) Roof Sidewall

MID-EFFICIENCY VENTING SYSTEM

METAL: (circle one) B vent Chimney Liner

Vent Dia_____Total Ht._____ft. Vent Conn. Dia_____ Conn. Length _____ft. # of Elbows_____

Connector Type: Single Wall B Vent Connector Rise Above Furnace _____ft.

A220915

Fig. 52 – Gas Furnace Checklist

PARTS REPLACEMENT INFORMATION GUIDE

Casing Group

Outer door and Blower door
Top filler plate
Bottom filler plate
Bottom enclosure

Electrical Group

Control bracket
Junction box
Limit switch(es)
Circuit board
Super plug
Door switch
Transformer
Wiring harness 115-V
Wiring harness 24-V

Blower Group

Blower cutoff
Blower motor and Blower housing
Blower wheel
Grommet and Power choke (where used)

Gas Control Group

Manifold
Orifice
Flame sensor
Hot surface igniter
Gas valve
Manual reset limit switches
Burner assembly and Burner support assembly

Heat Exchanger Group

Heat exchanger cell
Cell panel
Low NOx baffle (California models only)

Inducer Group

Inducer motor and Inducer wheel
Pressure switch
Housing assembly
Vent elbow assembly
Draft safeguard switch

TO OBTAIN INFORMATION ON PARTS: Consult your installing dealer or a licensed Heating and Air Conditioning company of your choice:

CAC/BDP
a division of Carrier Corporation
7310 West Morris Street
Indianapolis, IN 46231 U.S.A.

Have available the model number, series number, and serial number located on the unit rating plate to ensure correct replacement part.

MODEL NOMENCLATURE

MODEL	COOLING CAPACITY	HEATING CAPACITY	WIDTH	SERIES	VARIATIONS
PG80MSAA	36	070	A	A	A

⚠ WARNING

FIRE, EXPLOSION, ELECTRICAL SHOCK AND CARBON MONOXIDE POISONING HAZARD

Failure to follow this warning could result in dangerous operation, personal injury, death or property damage.

Improper installation, adjustment, alteration, service, or maintenance can cause personal injury, property damage, or death. Consult a qualified installer, service agency, or your local gas supplier for information or assistance. The qualified installer or service agency must use only factory-authorized replacement parts, kits, or accessories when modifying this product.

© 2026 Carrier. All rights reserved.
A Proud Member of the Carrier Family

Edition Date: 06/26

Catalog No: IM-PG80MSAA-02
Replaces: IM-PG80MSAA-01 REV B

Manufacturer reserves the right to change, at any time, specifications and designs without notice and without obligations.