PG8MVA
PG8JVA

VARIABLE–SPEED
INDUCED–COMBUSTION
4–WAY MULTIPOISE GAS FURNACE

Installation Instructions

SAFETY CONSIDERATIONS 2
INTRODUCTION 4
CODES AND STANDARDS 4
Safety 4
General Installation 4
Combustion and Ventilation Air 4
Duct Systems 4
Acoustical Lining and Fibrous Glass Duct 4
Gas Piping and Gas Pipe Pressure Testing 4
Electrical Connections 4
Venting 4
ELECTROSTATIC DISCHARGE (ESD) PRECAUTIONS PROCEDURE 4
LOCATION 5
AIR FOR COMBUSTION AND VENTILATION 8
Outdoor Combustion Air Method 9
The Standard Method: 9
Combination of Indoor and Outdoor Air 10
INSTALLATION 10
Bottom Return Air Inlet 10
Side Return Air Inlet 10
Leveling Legs (If Desired) 11
Bottom Return Air Inlet 11
Suspended Furnace Support 11
Platform Furnace Support 11
Roll–Out Protection 12
Bottom Return Air Inlet 12
Side Return Air Inlet 12
Filter Arrangement 13
AIR DUCTS 13
General Requirements 13
Ductwork Acoustical Treatment 13
Supply Air Connections 14
Upflow and Horizontal Furnaces 14
Downflow Furnaces 15
Return Air Connections 18
Downflow Furnaces 18
Upflow and Horizontal Furnaces 18
GAS PIPING 19
ELECTRICAL CONNECTION 20
ACCESSORIES 22
VENTING 22
START–UP, ADJUSTMENT, AND SAFETY CHECK 34
General 34
Start–Up Procedures 37
Adjustments 37
Check Safety Controls 45
Checklist 46
SERVICE AND MAINTENANCE PROCEDURES 46
General 46
Care and Maintenance 47
Sequence of Operation 52
Wiring Diagram 56
Troubleshooting 56
Accessory List 59
PARTS REPLACEMENT INFORMATION GUIDE 60

Always Ask For FACTORY AUTHORIZED PARTS

Use of the AHRI Certified TM Mark indicates a manufacturer's participation in the program. For verification of certification for individual products, go to www.ahridirectory.org.

ISO 9001 QMI-SAI Global

NOTE: Read the entire instruction manual before starting the installation.

Portions of the text and tables are reprinted from NFPA 54/ANSI Z223.1–2009©, with permission of National Fire Protection Association, Quincy, MA 02269 and American Gas Association, Washington DC 20001. This reprinted material is not the complete and official position of the NFPA or ANSI on the referenced subject, which is represented only by the standard in its entirety.

SAFETY CONSIDERATIONS

⚠ WARNING

FIRE, EXPLOSION, ELECTRICAL SHOCK, AND CARBON MONOXIDE POISONING HAZARD

Failure to follow this warning could result in dangerous operation, personal injury, death, or property damage.

Improper installation, adjustment, alteration, service, maintenance, or use can cause carbon monoxide poisoning, explosion, fire, electrical shock, or other conditions which may cause personal injury or property damage. Consult a qualified service agency, local gas supplier, or your distributor or branch for information or assistance. The qualified service agency must use only factory-authorized and listed kits or accessories when modifying this product.

⚠ CAUTION

FURNACE RELIABILITY HAZARD

Failure to follow this caution may result in unit component damage.

Application of this furnace should be indoors with special attention given to vent sizing and material, gas input rate, air temperature rise, unit leveling, and unit sizing.

Installing and servicing heating equipment can be hazardous due to gas and electrical components. **Only trained and qualified personnel should install, repair, or service heating equipment.** Untrained personnel can perform basic maintenance functions such as cleaning and replacing air filters. All other operations must be performed by trained service personnel. When working on heating equipment, observe precautions in literature, on tags, and on labels attached to or shipped with furnace and other safety precautions that may apply.

These instructions cover minimum requirements and conform to existing national standards and safety codes. In some instances, these instructions exceed certain local codes and ordinances, especially those that may not have kept up with changing residential construction practices. We require these instructions as a minimum for a safe installation.

⚠ CAUTION

CUT HAZARD

Failure to follow this caution may result in personal injury.

Sheet metal parts may have sharp edges or burrs. Use care and wear appropriate protective clothing, safety glasses and gloves when handling parts, and servicing furnaces.

Wear safety glasses, protective clothing and work gloves. Have fire extinguisher available during start-up and adjustment procedures and service calls.

This is the safety-alert symbol ⚠. When you see this symbol on the furnace and in instructions or manuals, be alert to the potential for personal injury.

Understand the signal words DANGER, WARNING, and CAUTION. These words are used with the safety-alert symbol. DANGER identifies the most serious hazards which **will** result in severe personal injury or death. WARNING signifies a hazard which **could** result in personal injury or death. CAUTION is used to identify hazards which **may** result in minor personal injury or product and property damage. NOTE is used to highlight suggestions which will result in enhanced installation, reliability, or operation.

1. Use only with type of gas approved for this furnace. Refer to the furnace rating plate.
2. Install this furnace only in a location and position as specified in the “Location” section of these instructions.
3. Provide adequate combustion and ventilation air to the furnace space as specified in “Air for Combustion and Ventilation” section.
4. Combustion products must be discharged outdoors. Connect this furnace to an approved vent system only, as specified in the “Venting” section of these instructions.
5. Never test for gas leaks with an open flame. Use a commercially available soap solution made specifically for the detection of leaks to check all connections, as specified in the “Gas Piping” section.
6. Always install furnace to operate within the furnace’s intended temperature-rise range with a duct system which has an external static pressure within the allowable range, as specified in the “Start-Up, Adjustments, and Safety Check” section. See furnace rating plate.
7. When a furnace is installed so that supply ducts carry air circulated by the furnace to areas outside the space containing the furnace, the return air shall also be handled by duct(s) sealed to the furnace casing and terminating outside the space containing the furnace. See “Air Ducts” section.
8. A gas-fired furnace for installation in a residential garage must be installed as specified in the warning box in the “Location” section.
9. The furnace may be used for construction heat provided that the furnace installation and operation complies with the first CAUTION in the LOCATION section of these instructions.
10. These Multipoise Gas-Fired Furnaces are CSA (formerly A.G.A. and C.G.A.) design-certified for use with natural and propane gases (see furnace rating plate) and for installation in alcoves, attics, basements, closets, utility rooms, crawlspaces, and garages. The furnace is factory-shipped for use with natural gas. A CSA (A.G.A. and C.G.A.) listed accessory gas conversion kit is required to convert furnace for use with propane gas.
11. See Fig. 1 for required clearances to combustible construction.
12. Maintain a 1-in. (25 mm) clearance from combustible materials to supply air ductwork for a distance of 36 in. (914 mm) horizontally from the furnace. See NFPA 90B or local code for further requirements.
13. These furnaces SHALL NOT be installed directly on carpeting, tile, or any other combustible material other than wood flooring. In downflow installations, factory accessory floor base MUST be used when installed on combustible materials and wood flooring. Special base is not required when this furnace is installed on manufacturer’s Coil Assembly Part No. CNRV, CNPV, CAP, or CAR or when Coil Box Part No. KCAKC is used. See Fig. 1 for clearance to combustible construction information.

⚠ WARNING

FIRE, EXPLOSION, ASPHYXIATION HAZARD

Improper adjustment, alteration, service, maintenance, or installation can cause serious injury or death.

Read and follow instructions and precautions in User's Information Manual provided with this furnace. Installation and service must be performed by a qualified service agency or the gas supplier.

⚠ CAUTION

Check entire gas assembly for leaks after lighting this appliance.

INSTALLATION

1. This furnace must be installed in accordance with the manufacturer's instructions and local codes. In the absence of local codes, follow the National Fuel Gas Code ANSI Z223.1 / NFPA54 or CSA B-149. 1 Gas Installation Code.
2. This furnace must be installed so there are provisions for combustion and ventilation air. See manufacturer's installation information provided with this appliance.

OPERATION

This furnace is equipped with manual reset limit switch(es) in burner compartment to protect against overheat conditions that can result from inadequate combustion air supply or blocked vent conditions.

1. Do not bypass limit switches.
2. If a limit opens, call a qualified serviceman to correct the condition and reset limit switch.

INSTALLATION

MINIMUM INCHES CLEARANCE TO COMBUSTIBLE CONSTRUCTION

This forced air furnace is equipped for use with natural gas at altitudes 0 - 10,000 ft (0 - 3,050m).

An accessory kit, supplied by the manufacturer, shall be used to convert to propane gas use or may be required for some natural gas applications.

This furnace is for indoor installation in a building constructed on site.

This furnace may be installed on combustible flooring in alcove or closet at minimum clearance as indicated by the diagram from combustible material.

This furnace may be used with a Type B-1 Vent and may be vented in common with other gas fired appliances.

This furnace is approved for UPFLOW, DOWNFLOW, and HORIZONTAL installations.

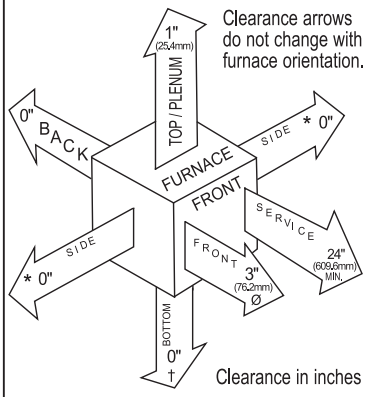

Vent Clearance to combustibles:
For Single Wall vents 6 inches (6 po).
For Type B-1 vent type 1 inch (1 po).

MINIMUM INCHES CLEARANCE TO COMBUSTIBLE CONSTRUCTION

DOWNFLOW POSITIONS:

† Installation on non-combustible floors only.
For Installation on combustible flooring only when installed on special base, Part No. KGASB0201ALL or NAHA01101SB, Coil Assembly, Part No. CAR, CAP, CNPV, CNRV, END4X, ENW4X, WENC, WTNC, WENW OR WTNW.

Ø 18 inches front clearance required for alcove.

* Indicates supply or return sides when furnace is in the horizontal position. Line contact only permissible between lines formed by intersections of the Top and two Sides of the furnace jacket, and building joists, studs or framing.

336996-101 REV. C

A10269

Fig. 1 - Clearances to Combustibles

PG8MVA

INTRODUCTION

The Series 150/F 4-way multipoise Category I fan-assisted furnace is CSA (formerly A.G.A. and C.G.A.) design-certified. A Category I fan-assisted furnace is an appliance equipped with an integral mechanical means to either draw or force products of combustion through the combustion chamber and/or heat exchanger. The furnace is factory-shipped for use with natural gas. This furnace is not approved for installation in mobile homes, recreational vehicles, or outdoors.

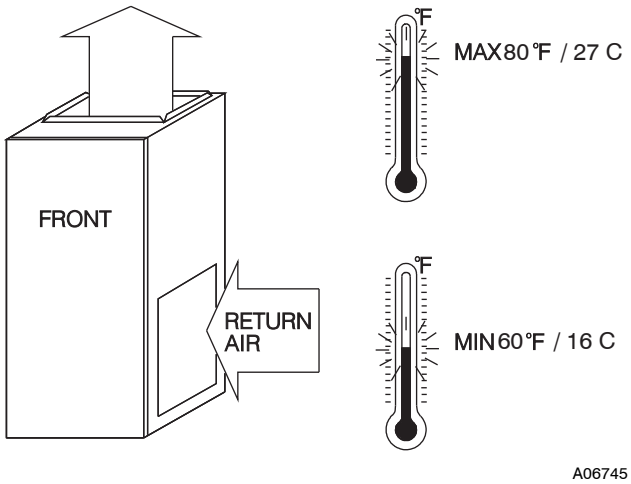

Fig. 2 - Return Air Temperature

This furnace is designed for minimum continuous return-air temperature of 60°F (15°C) db or intermittent operation down to 55°F (13°C)db such as when used with a night setback thermostat. Return-air temperature must not exceed 80°F (27°C) db. Failure to follow these return-air temperature limits may affect reliability of heat exchangers, motors, and controls. (See Fig. 2.)

For accessory installation details, refer to the applicable instruction literature.

NOTE: Remove all shipping brackets and materials before operating the furnace.

CODES AND STANDARDS

Follow all national and local codes and standards in addition to these instructions. The installation must comply with regulations of the serving gas supplier, local building, heating, plumbing, and other codes. In absence of local codes, the installation must comply with the national codes listed below and all authorities having jurisdiction.

In the United States, follow all codes and standards for the following:

Safety

NFPA 54/ANSI Z223.1-2009 and the Installation Standards, Warm Air Heating and Air Conditioning Systems ANSI/NFPA 90B .

General Installation

Current edition of the NFGC and the NFPA 90B. For copies, contact the National Fire Protection Association Inc., Batterymarch Park, Quincy, MA 02269; (www.NFPA.org) or for only the NFGC, contact the American Gas Association, 400 N. Capitol Street, N.W., Washington, DC 20001 (www.AGA.org.) .

Combustion and Ventilation Air

Section 9.3 NFPA 54/ANSI Z223.1-2009, Air for Combustion and Ventilation .

Duct Systems

Air Conditioning Contractors Association (ACCA) Manual D, Sheet Metal and Air Conditioning Contractors National Association (SMACNA), or American Society of Heating, Refrigeration, and Air Conditioning Engineers (ASHRAE) 2001 Fundamentals Handbook Chapter 34 or 2000 HVAC Systems and Equipment Handbook Chapters 9 and 16.

Acoustical Lining and Fibrous Glass Duct

Current edition of SMACNA and NFPA 90B as tested by UL Standard 181 for Class I Rigid Air Ducts

Gas Piping and Gas Pipe Pressure Testing

NFPA 54/ANSI Z223.1-2009 ; chapters 5, 6, and 7 and National Plumbing Codes .

Electrical Connections

National Electrical Code (NEC) ANSI/NFPA70-2011 .

Venting

NFPA 54/ANSI Z223.1-2009; chapters 12 and 13.

ELECTROSTATIC DISCHARGE (ESD) PRECAUTIONS PROCEDURE

⚠ CAUTION

FURNACE RELIABILITY HAZARD

Failure to follow this caution may result in unit component damage.

Electrostatic discharge can affect electronic components. Take precautions during furnace installation and servicing to protect the furnace electronic control. Precautions will prevent electrostatic discharges from personnel and hand tools which are held during the procedure. These precautions will help to avoid exposing the control to electrostatic discharge by putting the furnace, the control, and the person at the same electrostatic potential.

1. Disconnect all power to the furnace. Multiple disconnects may be required. DO NOT TOUCH THE CONTROL OR ANY WIRE CONNECTED TO THE CONTROL PRIOR TO DISCHARGING YOUR BODY'S ELECTROSTATIC CHARGE TO GROUND.
2. Firmly touch the clean, unpainted, metal surface of the furnace chassis which is close to the control. Tools held in a person's hand during grounding will be satisfactorily discharged.
3. After touching the chassis, you may proceed to service the control or connecting wires as long as you do nothing to recharge your body with static electricity (for example; DO NOT move or shuffle your feet, do not touch ungrounded objects, etc.).

FURNACE SIZE (MODELS)	A (CABINET WIDTH)		B (OUTLET WIDTH)		C TOP AND BOTTOM (VENT KNOCKOUT LOCATION)		D (BOTTOM INLET WIDTH)		FLUE COLLAR		SHIPPING WEIGHT	
(PG8JVA/PG8MVA)	inches	mm	inches	mm	inches	mm	inches	mm	inches	mm	LBS	KG
036-070	14 3/16	360	12 9/16	319	9 5/16	237	12 11/16	322	4	102	115	52.1
048-090	17 1/2	445	15 7/8	403	11 9/16	294	16	406			130	59.0
060-110	21	533	19 3/8	495	13 5/16	338	19 1/2	495			155	70.3
066-135	24 1/2	622	22 7/8	584	15 1/16	383	23	584			166	75.3

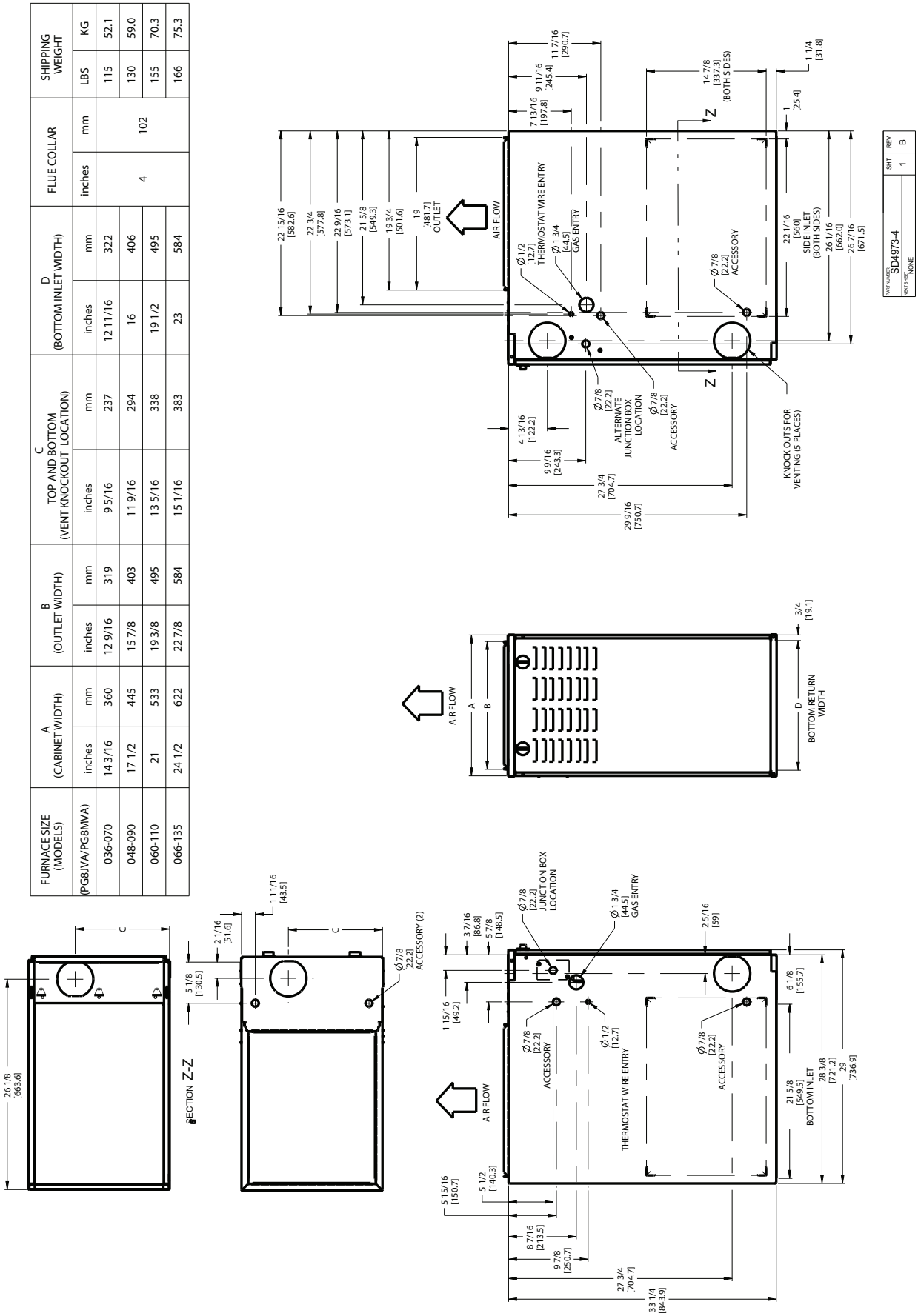

*135 size furnaces requires a 5 or 6−in. (127 or 152 mm) vent. Use a vent adapter between furnace and vent stack. See Installation Instructions for complete installation requirements.

A12051

Fig. 3 - Dimensional Drawing

PG8MVA

4. If you touch ungrounded objects (and recharge your body with static electricity), firmly touch a clean, unpainted metal surface of the furnace again before touching control or wires.
5. Use this procedure for installed and uninstalled (ungrounded) furnaces.
6. Before removing a new control from its container, discharge your body's electrostatic charge to ground to protect the control from damage. If the control is to be installed in a furnace, follow items 1 through 4 before bringing the control or yourself in contact with the furnace. Put all used and new controls into containers before touching ungrounded objects.
7. An ESD service kit (available from commercial sources) may also be used to prevent ESD damage.

LOCATION

GENERAL

This multipoise furnace is shipped in packaged configuration. Some assembly and modifications are required when used in any of the four applications shown in Fig. 5.

NOTE: For high-altitude installations, the high-altitude conversion kit MUST be installed at or above 5500 ft. (1676 M) above sea level. Obtain high-altitude conversion kit from your area authorized distributor.

This furnace must:

- be installed so the electrical components are protected from water.
- not be installed directly on any combustible material other than wood flooring (refer to SAFETY CONSIDERATIONS).
- be located close to the chimney or vent and attached to an air distribution system. Refer to Air Ducts section.
- be provided ample space for servicing and cleaning. Always comply with minimum fire protection clearances shown on the furnace clearance to combustible construction label.

⚠ WARNING

CARBON MONOXIDE POISONING / COMPONENT DAMAGE HAZARD

Failure to follow this warning could result in personal injury or death and unit component damage.

Corrosive or contaminated air may cause failure of parts containing flue gas, which could leak into the living space. Air for combustion must not be contaminated by halogen compounds, which include fluoride, chloride, bromide, and iodide. These elements can corrode heat exchangers and shorten furnace life. Air contaminants are found in aerosol sprays, detergents, bleaches, cleaning solvents, salts, air fresheners, and other household products. Do not install furnace in a corrosive or contaminated atmosphere. Make sure all combustion and circulating air requirements are met, in addition to all local codes and ordinances.

The following types of furnace installations may require OUTDOOR AIR for combustion due to chemical exposures:

- Commercial buildings
- Buildings with indoor pools
- Laundry rooms
- Hobby or craft rooms, and
- Chemical storage areas

If air is exposed to the following substances, it should not be used for combustion air, and outdoor air may be required for combustion:

- Permanent wave solutions
- Chlorinated waxes and cleaners
- Chlorine based swimming pool chemicals
- Water softening chemicals
- De-icing salts or chemicals
- Carbon tetrachloride
- Halogen type refrigerants
- Cleaning solvents (such as perchloroethylene)
- Printing inks, paint removers, varnishes, etc.
- Hydrochloric acid
- Cements and glues
- Antistatic fabric softeners for clothes dryers
- Masonry acid washing materials

All fuel-burning equipment must be supplied with air for fuel combustion. Sufficient air must be provided to avoid negative pressure in the equipment room or space. A positive seal must be made between the furnace cabinet and the return-air duct to prevent pulling air from the burner area and from draft safeguard opening.

⚠ WARNING

FIRE, INJURY OR DEATH HAZARD

Failure to follow this warning could result in personal injury, death and/or property damage.

When the furnace is installed in a residential garage, the burners and ignition sources must be located at least 18 in. (457 mm) above the floor. The furnace must be located or protected to avoid damage by vehicles. When the furnace is installed in a public garage, airplane hangar, or other building having a hazardous atmosphere, the furnace must be installed in accordance with the NFPA 54/ANSI Z223.1-2009 . (See Fig. 4.)

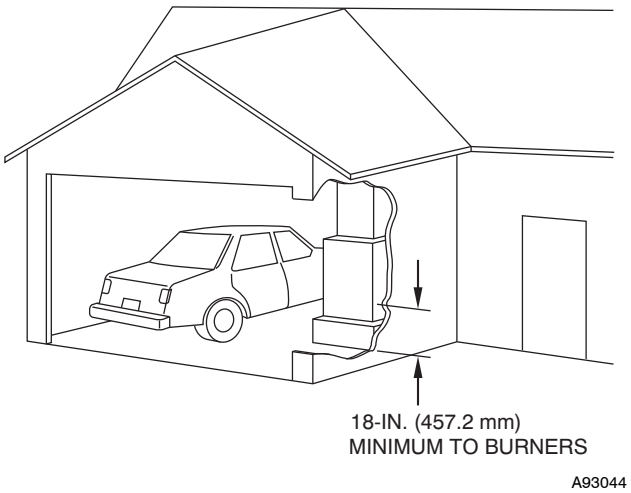

Fig. 4 - Installation in a Garage

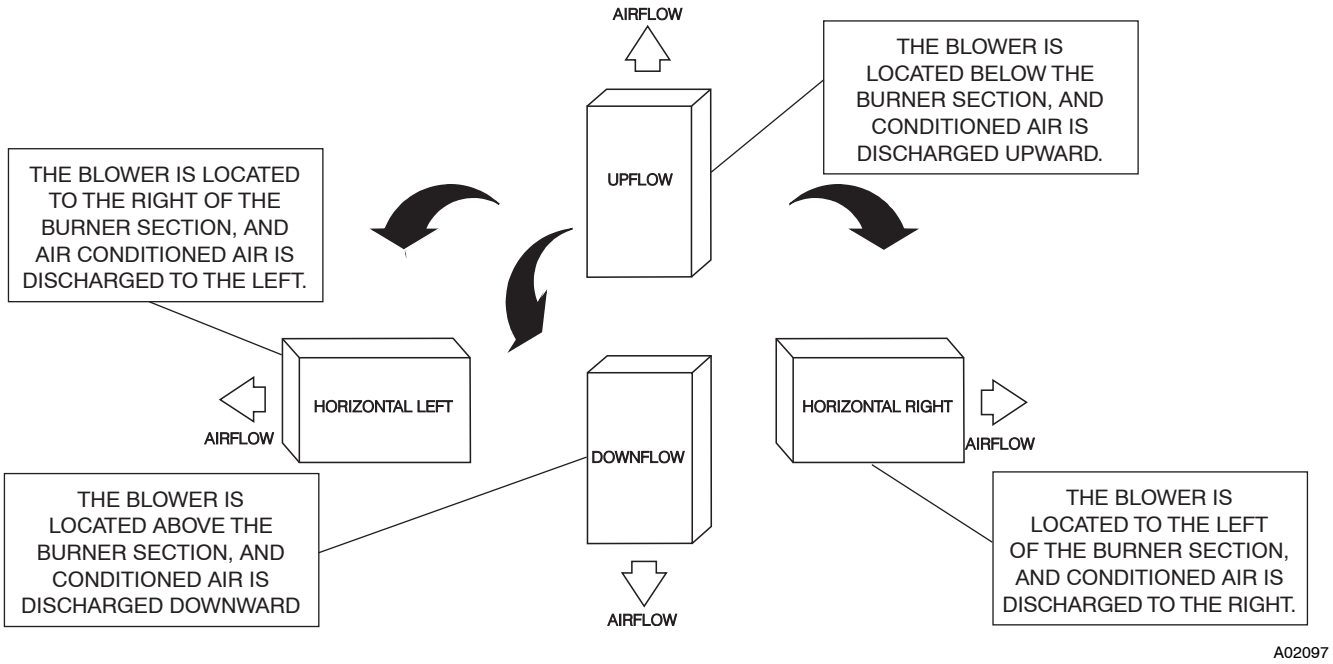

Fig. 5 - Multipoise Orientations

PG8MVA

⚠ WARNING

FIRE HAZARD

Failure to follow this warning could result in personal injury, death and/or property damage.

Do not install the furnace on its back or hang furnace with control compartment facing downward. Safety control operation will be adversely affected. Never connect return-air ducts to the back of the furnace. (See Fig. 6.)

LOCATION RELATIVE TO COOLING EQUIPMENT

The cooling coil must be installed parallel with, or on the downstream side of the unit to avoid condensation in the heat exchangers. When installed parallel with the furnace, dampers or other flow control must prevent chilled air from entering the furnace. If the dampers are manually operated, they must be equipped with means to prevent operation of either unit unless the damper is in the full-heat or full-cool position.

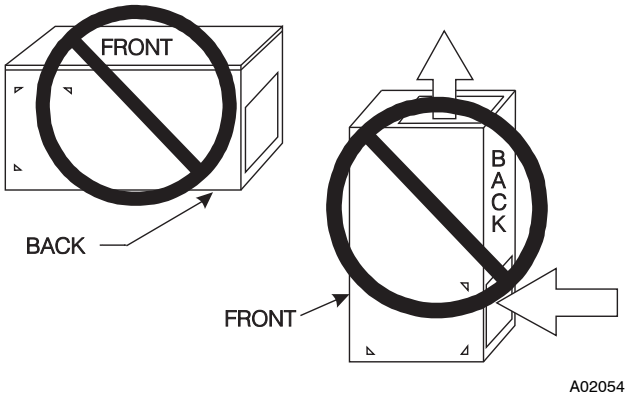

Fig. 6 - Prohibit Installation on Back

⚠ CAUTION

PERSONAL INJURY AND/OR PROPERTY DAMAGE HAZARD

Improper use or installation of this furnace may result in premature furnace component failure. This gas furnace may be used for heating buildings under construction provided that:

-The furnace is permanently installed with all electrical wiring, piping, venting and ducting installed according to these installation instructions. A return air duct is provided, sealed to the furnace casing, and terminated outside the space containing the furnace. This prevents a negative pressure condition as created by the circulating air blower, causing a flame rollout and/or drawing combustion products into the structure.

-The furnace is controlled by a thermostat. It may not be "hot wired" to provide heat continuously to the structure without thermostatic control.

-Clean outside air is provided for combustion. This is to minimize the corrosive effects of adhesives, sealers and other construction materials. It also prevents the entrainment of drywall dust into combustion air, which can cause fouling and plugging of furnace components.

-The temperature of the return air to the furnace is maintained between 55°F (13°C) and 80°F (27°C), with no evening setback or shutdown. The use of the furnace while the structure is under construction is deemed to be intermittent operation per our installation instructions.

-The air temperature rise is within the rated rise range on the furnace rating plate, and the gas input rate has been set to the nameplate value. -The filters used to clean the circulating air during the construction process must be either changed or thoroughly cleaned prior to occupancy.

-The furnace, ductwork and filters are cleaned as necessary to remove drywall dust and construction debris from all HVAC system components after construction is completed.

-Verify proper furnace operating conditions including ignition, gas input rate, air temperature rise, and venting according to these installation instructions.

Table 1 – Minimum Free Area Required for Each Combustion Air opening of Duct to Outdoors

FURNACE INPUT (BTUH)	TWO HORIZONTAL DUCTS (1 SQ. IN./2,000 BTUH) (1,100 SQ. MM/KW)		SINGLE DUCT OR OPENING (1 SQ. IN./3,000 BTUH) (734 SQ. MM/KW)		TWO OPENINGS OR VERTICAL DUCTS (1 SQ. IN./4,000 BTUH) (550 SQ. MM/KW)	
	Free Area of Opening and Duct Sq. In. (Sq. mm)	Round Duct Dia. In. (mm)	Free Area of Opening and Duct Sq. In. (Sq. mm)	Round Duct Dia. In. (mm)	Free Area of Opening and Duct Sq. In. (Sq. mm)	Round Duct Dia. In. (mm)
44,000	22 (14194)	6 (152)	14.7 (9484)	5 (127)	11 (7096)	4 (102)
66,000	33 (21290)	7 (178)	22 (14193)	6 (152)	16.5 (10645)	5 (127)
88,000	44 (28387)	8 (203)	29.3 (18903)	7 (178)	22 (14193)	6 (152)
110,000	55 (35484)	9 (229)	36.7 (23677)	7 (178)	27.5 (17742)	6 (152)
132,000	66 (42580)	10 (254)	44 (28387)	8 (203)	33 (21290)	7 (178)
154,000	77 (49677)	10 (254)	51.3 (33096)	9 (229)	38.5 (24839)	8 (203)

EXAMPLES: Determining Free Area

FURNACE		WATER HEATER		TOTAL INPUT		
110,000	+	30,000	=	(140,000 divided by 4,000)	=	35.0 Sq. In. for each two Vertical Ducts or Openings
66,000	+	40,000	=	(106,000 divided by 3,000)	=	35.3 Sq. In. for a Single Duct or Opening
88,000	+	30,000	=	(118,000 divided by 2,000)	=	59.0 Sq. In. for each of two Horizontal Ducts

PG8MVA

Table 2 – Minimum Space Volumes for 100% Combustion, Ventilation, and Dilution from Indoors

ACH	OTHER THAN FAN-ASSISTED TOTAL (1,000'S BTUH GAS INPUT RATE)			FAN-ASSISTED TOTAL (1,000'S BTUH GAS INPUT RATE)					
	30	40	50	44	66	88	110	132	154
	Space Volume Ft^3 (M^3)								
0.60	1,050 (29.7)	1,400 (39.6)	1,750 (49.5)	1,100 (31.1)	1,650 (46.7)	2,200 (62.2)	2,750 (77.8)	3,300 (93.4)	3,850 (109.0)
0.50	1,260 (35.6)	1,680 (47.5)	2,100 (59.4)	1,320 (37.3)	1,980 (56.0)	2,640 (74.7)	3,300 (93.4)	3,960 (112.1)	4,620 (130.8)
0.40	1,575 (44.5)	2,100 (59.4)	2,625 (74.3)	1,650 (46.7)	2,475 (70.0)	3,300 (93.4)	4,125 (116.8)	4,950 (140.1)	5,775 (163.5)
0.30	2,100 (59.4)	2,800 (79.2)	3,500 (99.1)	2,200 (62.2)	3,300 (93.4)	4,400 (124.5)	5,500 (155.7)	6,600 (186.8)	7,700 (218.0)
0.20	3,150 (89.1)	4,200 (118.9)	5,250 (148.6)	3,300 (93.4)	4,950 (140.1)	6,600 (186.8)	8,250 (233.6)	9,900 (280.3)	11,550 (327.0)
0.10	6,300 (178.3)	8,400 (237.8)	10,500 (297.3)	6,600 (186.8)	9,900 (280.3)	13,200 (373.7)	16,500 (467.2)	19,800 (560.6)	23,100 (654.1)
0.00	NP	NP	NP	NP	NP	NP	NP	NP	NP

NP = Not Permitted

AIR FOR COMBUSTION AND VENTILATION

Provisions for adequate combustion, ventilation, and dilution air must be provided in accordance with:

- U.S. Installations: Section 9.3 of the NFPA 54/ANSI Z223.1-2009 , Air for Combustion and Ventilation and applicable provisions of the local building codes.

⚠ CAUTION

FURNACE CORROSION HAZARD

Failure to follow this caution may result in furnace damage.

Air for combustion must not be contaminated by halogen compounds, which include fluoride, chloride, bromide, and iodide. These elements can corrode heat exchangers and shorten furnace life. Air contaminants are found in aerosol sprays, detergents, bleaches, cleaning solvents, salts, air fresheners, and other household products.

⚠ WARNING

CARBON MONOXIDE POISONING HAZARD

Failure to follow this warning could result in personal injury or death.

The operation of exhaust fans, kitchen ventilation fans, clothes dryers, attic exhaust fans or fireplaces could create a NEGATIVE PRESSURE CONDITION at the furnace. Make-up air MUST be provided for the ventilation devices, in addition to that required by the furnace. Refer to the Carbon Monoxide Poisoning Hazard warning in the venting section of these instructions to determine if an adequate amount of make-up air is available.

The requirements for combustion and ventilation air depend upon whether or not the furnace is located in a space having a volume of at least 50 cubic feet per 1,000 Btuh input rating for all gas appliances installed in the space.

- Spaces having less than 50 cubic feet per 1,000 Btuh require the OUTDOOR COMBUSTION AIR METHOD.

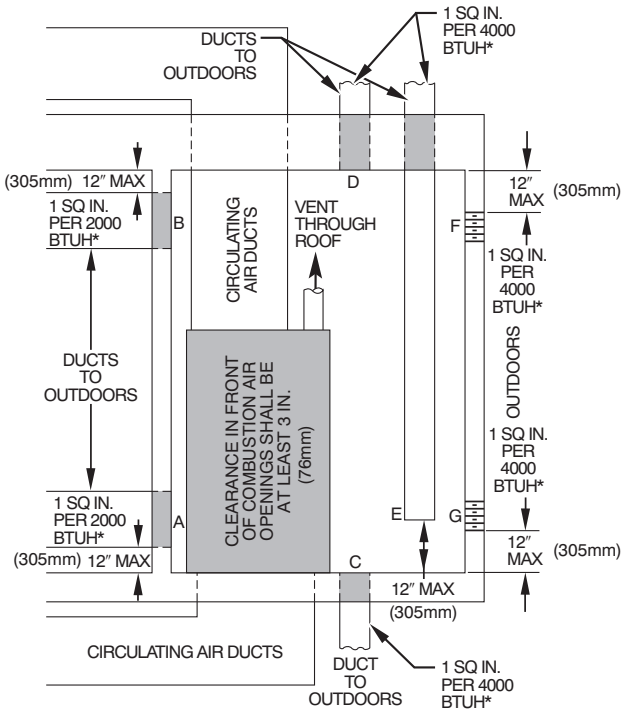

*Minimum dimensions of 3–in. (76 mm).

NOTE: Use any of the following combinations of openings:
A & B C & D D & E F & G

A03174

Fig. 7 - Air for Combustion, Ventilation, and Dilution for Outdoors

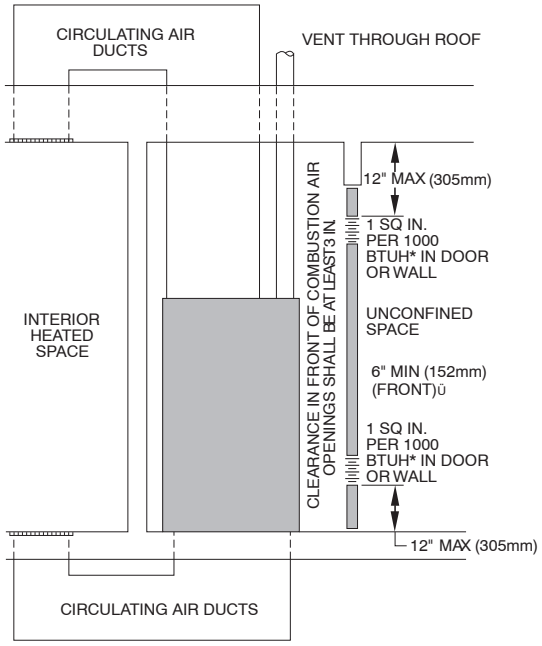

* Minimum opening size is 100 sq in. (64516 sq. mm)with minimum dimensions of 3 in. (76 mm)
† Minimum of 3 in. (76 mm) when type-B1 vent is used.

A03175

Fig. 8 - Air for Combustion, Ventilation, and Dilution from Indoors

- Spaces having at least 50 cubic feet per 1,000 Btuh may use the **INDOOR COMBUSTION AIR, STANDARD or KNOWN AIR INFILTRATION** METHOD.

Outdoor Combustion Air Method

1. Provide the space with sufficient air for proper combustion, ventilation, and dilution of flue gases using permanent horizontal or vertical duct(s) or opening(s) directly communicating with the outdoors or spaces that freely communicate with the outdoors.
2. Fig. 7 illustrates how to provide TWO OUTDOOR OPENINGS, one inlet and one outlet combustion and ventilation air opening, to the outdoors.
   a. One opening MUST commence within 12 in. (300 mm) of the ceiling and the second opening MUST commence within 12 in. (300 mm) of the floor.
   b. Size openings and ducts per Fig. 7 and Table 1.
   c. TWO HORIZONTAL DUCTS require 1 sq. in. (645 sq. mm) of free area per 2,000 Btuh (1,100 mm^2/kW) of combined input for all gas appliances in the space per Fig. 7 and Table 1.
   d. TWO OPENINGS OR VERTICAL DUCTS require 1 sq. in. (645 sq. mm) of free area per 4,000 Btuh (550 mm^2/kW) for combined input of all gas appliances in the space per Fig. 7 and Table 1.
3. ONE OUTDOOR OPENING requires:
   a. 1 sq. in. (645 sq. mm) of free area per 3,000 Btuh (734 mm^2/kW) for combined input of all gas appliances in the space per Table 1 and
   b. Not less than the sum of the areas of all vent connectors in the space.

The opening shall commence within 12 in. (300 mm) of the ceiling. Appliances in the space shall have clearances of at least 1 in. (25 mm) from the sides and back and 6 in. (150 mm) from the front. The opening shall directly communicate with the outdoors or shall communicate through a vertical or horizontal duct to the outdoors or spaces (crawl or attic) that freely communicate with the outdoors.

Indoor Combustion Air© NFPA & AGA

Standard and **Known-Air-Infiltration Rate** Methods

Indoor air is permitted for combustion, ventilation, and dilution, if the **Standard** or **Known-Air-Infiltration** Method is used.

⚠ WARNING

CARBON MONOXIDE POISONING HAZARD

Failure to follow this warning could result in personal injury or death.

Many homes require air to be supplied from outdoors for furnace combustion, ventilation, and dilution of flue gases.

The furnace combustion air supply must be provided in accordance with this instruction manual.

The Standard Method:

1. The space has no less volume than 50 cubic feet per 1,000 Btuh of the maximum input ratings for all gas appliances installed in the space and
2. The air infiltration rate is not known to be less than 0.40 air changes per hour (ACH).

The **Known Air Infiltration Rate** Method shall be used, if the infiltration rate is known to be:

1. Less than 0.40 ACH and
2. Equal to or greater than 0.10 ACH

Infiltration rates greater than 0.60 ACH shall not be used. The minimum required volume of the space varies with the number of ACH and shall be determined per Table 2 or Equations 1 and 2. Determine the minimum required volume for each appliance in the space and add the volumes together to get the total minimum required volume for the space.

Table 2 - Minimum Space Volumes were determined by using the following equations from the *National Fuel Gas Code ANSI Z223.1-2009/NFPA 54-2009, 9.3.2.2:*

1. For other than fan-assisted appliances, such as a draft hood-equipped water heater:

$$\text{Volume}_{\text{Other}} = \frac{21\text{ft}^3}{\text{ACH}}\left(\frac{I_{\text{other}}}{1000\ \text{Btu/hr}}\right)$$

A04002

2. For fan-assisted appliances such as this furnace:

$$\text{Volume}_{\text{Fan}} = \frac{15\text{ft}^3}{\text{ACH}}\left(\frac{I_{\text{fan}}}{1000\ \text{Btu/hr}}\right)$$

A04003

If: Iother = combined input of all other than fan-assisted appliances in Btuh/hr

Ifan = combined input of all fan-assisted appliances in Btuh/hr

ACH = air changes per hour (ACH shall not exceed 0.60.)

The following requirements apply to the **Standard** Method and to the **Known Air Infiltration Rate** Method.

1. Adjoining rooms can be considered part of a space if:
   a. There are no closeable doors between rooms.
   b. Combining spaces on same floor level. Each opening shall have free area of at least 1 in.^{2}/1,000 Btuh (2,000 mm^2/kW) of the total input rating of all gas appliances in the space, but not less than 100 in.^{2} (0.06 m^2). One opening shall commence within 12 in. (300 mm) of the ceiling and the second opening shall commence within 12 in. (300 mm) of the floor. The minimum dimension of air openings shall be at least 3 in. (80 mm). (See Fig. 8.)
   c. Combining space on different floor levels. The volumes of spaces on different floor levels shall be considered as communicating spaces if connected by one or more permanent openings in doors or floors having free area of at least 2 in.^{2}/1,000 Btuh (4,400 mm^2/kW) of total input rating of all gas appliances.
2. An attic or crawlspace may be considered a space that freely communicates with the outdoors provided there are adequate permanent ventilation openings directly to outdoors having free area of at least 1-in.^{2}/4,000 Btuh of total input rating for all gas appliances in the space.
3. In spaces that use the **Indoor Combustion Air** Method, infiltration should be adequate to provide air for combustion, permanent ventilation and dilution of flue gases. However, in buildings with unusually tight construction, additional air MUST be provided using the methods described in the **Outdoor Combustion Air** Method section.
4. Unusually tight construction is defined as Construction with:
   a. Walls and ceilings exposed to the outdoors have a continuous, sealed vapor barrier. Openings are gasketed or sealed and
   b. Doors and openable windows are weatherstripped and
   c. Other openings are caulked or sealed. These include joints around window and door frames, between sole plates and floors, between wall-ceiling joints, between wall panels, at penetrations for plumbing, electrical and gas lines, etc.

Combination of Indoor and Outdoor Air

1. Indoor openings shall comply with the **Indoor Combustion Air** Method below and,
2. Outdoor openings shall be located as required in the **Outdoor Combustion Air** Method mentioned previously and,
3. Outdoor openings shall be sized as follows:
   a. Calculate the Ratio of all Indoor Space volume divided by required volume for **Indoor Combustion Air** Method below.
   b. Outdoor opening size reduction **Factor** is 1 minus the **Ratio** in a. above.
   c. Minimum size of Outdoor openings shall be the size required in **Outdoor Combustion Air** Method above multiplied by reduction **Factor** in b. above. The minimum dimension of air openings shall be not less than 3 in. (80 mm).

INSTALLATION

UPFLOW INSTALLATION

Bottom Return Air Inlet

These furnaces are shipped with bottom closure panel installed in bottom return-air opening. Remove and discard this panel when bottom return air is used. To remove bottom closure panel, perform the following:

1. Tilt or raise furnace and remove 2 screws holding bottom filler panel. (See Fig. 9.)
2. Rotate bottom filler panel downward to release holding tabs.
3. Remove bottom closure panel.
4. Reinstall bottom filler panel and screws.

Side Return Air Inlet

These furnaces are shipped with bottom closure panel installed in bottom return-air opening. This panel MUST be in place when only side return air is used.

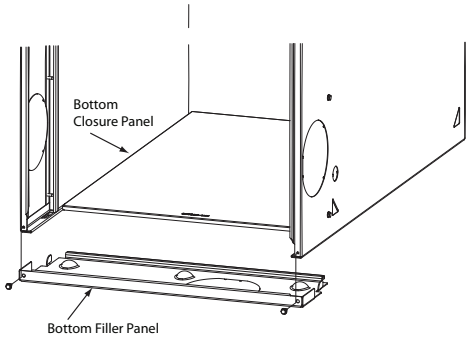

A10273

Fig. 9 - Removing Bottom Closure Panel

NOTE: Side return-air openings can be used in UPFLOW and most HORIZONTAL configurations. Do not use side return-air openings in DOWNFLOW configuration.

Leveling Legs (If Desired)

In upflow position with side return inlet(s), leveling legs may be used. (See Fig. 10.) Install field-supplied, 5/16 X 1-1/2 in. (8 X 38 mm) (max) corrosion-resistant machine bolts, washers and nuts.

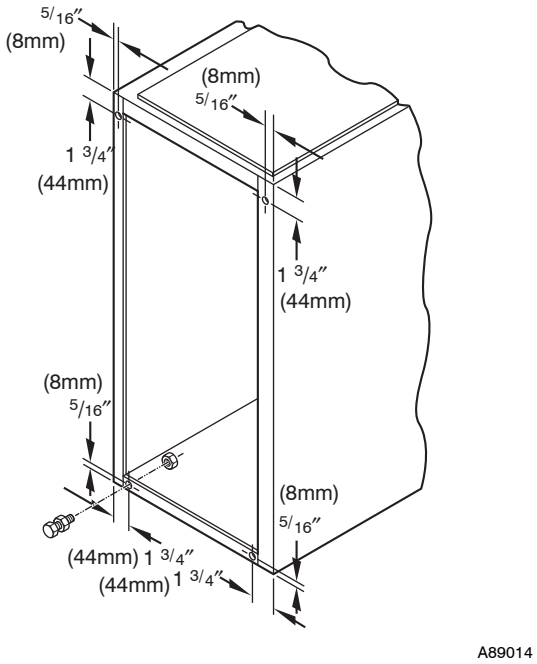

Fig. 10 - Leveling Legs

NOTE: Bottom closure must be used when leveling legs are used. It may be necessary to remove and reinstall bottom closure panel to install leveling legs. To remove bottom closure panel, see Item 1 in Bottom Return Air Inlet section in Step 1 above.

To install leveling legs:

1. Position furnace on its back. Locate and drill a hole in each bottom corner of furnace. (See Fig. 10.)
2. For each leg, install nut on bolt and then install bolt with nut in hole. (Install flat washer if desired.)
3. Install another nut on other side of furnace base. (Install flat washer if desired.)
4. Adjust outside nut to provide desired height, and tighten inside nut to secure arrangement.
5. Reinstall bottom closure panel if removed.

DOWNFLOW INSTALLATION

NOTE: For downflow applications, this furnace is approved for use on combustible flooring when any one of the following 3 accessories are used:

- Special Base, KGASB
- Cased Coil Assembly Part No. CNPV, CNRV, CAP, or CAR
- Coil Box Part No. KCAKC

1. Determine application being installed from Table 3.
2. Construct hole in floor per Table 3 and Fig. 11.
3. Construct plenum to dimensions specified in Table 3 and Fig. 11.
4. If downflow subbase, KGASB is used, install as shown in Fig. 12. If Coil Assembly Part No. CPVP, CAPMP or CNPVP Coil Box Part No. KCAKC is used, install as shown in Fig. 13.

NOTE: It is recommended that the perforated supply-air duct flanges be completely folded over or removed from furnace when installing the furnace on a factory-supplied cased coil or coil box. To remove the supply-air duct flange, use wide duct pliers or hand seamers to bend flange back and forth until it breaks off. Be careful of sharp edges. (See Fig. 14.)

Bottom Return Air Inlet

These furnaces are shipped with bottom closure panel installed in bottom return-air opening. Remove and discard this panel when bottom return air is used. To remove bottom closure panel, perform the following:

1. Tilt or raise furnace and remove 2 screws holding bottom filler panel. (See Fig. 9.)
2. Rotate bottom filler panel downward to release holding tabs.
3. Remove bottom closure panel.
4. Reinstall bottom filler panel and screws.

HORIZONTAL INSTALLATION

⚠ WARNING

FIRE, EXPLOSION, AND CARBON MONOXIDE POISONING HAZARD

Failure to follow this warning could result in personal injury, death, or property damage.

Do not install the furnace on its back or hang furnace with control compartment facing downward. Safety control operation will be adversely affected. Never connect return-air ducts to the back of the furnace.

The furnace can be installed horizontally in an attic or crawlspace on either the left-hand (LH) or right-hand (RH) side. The furnace can be hung from floor joists, rafters or trusses or installed on a non-combustible platform, blocks, bricks or pad.

Suspended Furnace Support

The furnace may be supported under each end with threaded rod, angle iron or metal plumber's strap as shown. (See Fig. 15 and 16.) Secure angle iron to bottom of furnace as shown. Heavy-gauge sheet metal straps (plumber's straps) may be used to suspend the furnace from each bottom corner. To prevent screws from pulling out, use 2 #8 x in. screws into the side and 2 #8 x in. screws in the bottom of the furnace casing for each strap. (See Fig. 15 and 16.)

If the screws are attached to ONLY the furnace sides and not the bottom, the straps must be vertical against the furnace sides and not pull away from the furnace sides, so that the strap attachment screws are not in tension (are loaded in shear) for reliable support.

Platform Furnace Support

Construct working platform at location where all required furnace clearances are met. (See Fig. 2 and 17.) For furnaces with 1-in. (25 mm) clearance requirement on side, set furnace on non-combustible blocks, bricks or angle iron. For crawlspace installations, if the furnace is not suspended from the floor joists, the ground underneath furnace must be level and the furnace set on blocks or bricks.

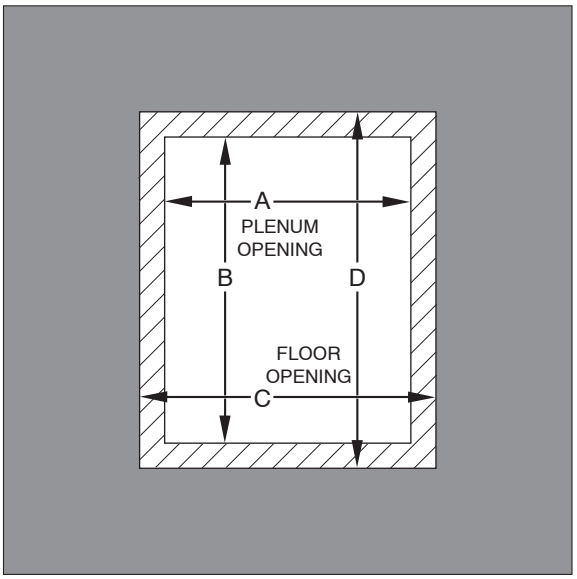

A96283

Fig. 11 - Floor and Plenum Opening Dimensions

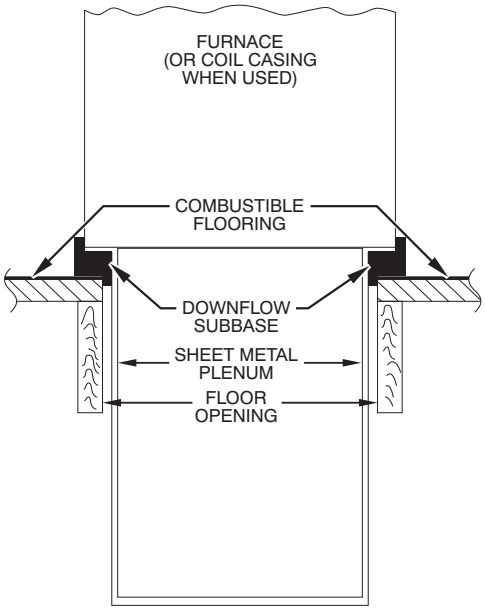

A96285

Fig. 12 - Furnace, Plenum, and Subbase Installed on a Combustible Floor

Roll-Out Protection

Provide a minimum 17-3/4-in. X 22-in. (451 X 559 mm) piece of sheet metal for flame roll-out protection in front of burner area for furnaces closer than 12-in. (305 mm) above the combustible deck or suspended furnaces closer than 12-in. (305 mm) to joists. The sheet metal MUST extend underneath the furnace casing by 1-in. (25 mm)with the door removed.

The bottom closure panel on furnaces of widths 17-1/2-in. (445 mm) and larger may be used for flame roll-out protection when bottom of furnace is used for return air connection. See Fig. 17 for proper orientation of roll-out shield.

Bottom Return Air Inlet

These furnaces are shipped with bottom closure panel installed in bottom return-air opening. Remove and discard this panel when bottom return air is used. To remove bottom closure panel, perform the following:

1. Tilt or raise furnace and remove two screws holding bottom filler panel. (See Fig. 9.)
2. Rotate bottom filler panel downward to release holding tabs.
3. Remove bottom closure panel.
4. Reinstall bottom filler panel and screws.

Side Return Air Inlet

These furnaces are shipped with bottom closure panel installed in bottom return-air opening. This panel MUST be in place when side return air inlet(s) are used without a bottom return air inlet.

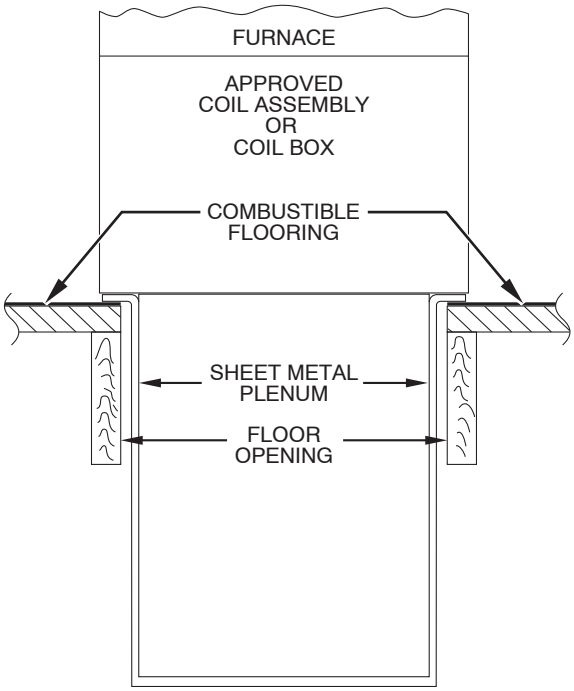

A08556

Fig. 13 - Furnace, Plenum, and Coil Assembly or Coil Box Installed on a Combustible Floor

Not all horizontal furnaces are approved for side return air connections (See Fig. 20.)

Table 3 – Opening Dimensions - In. (mm)

FURNACE CASING WIDTH IN. (mm)	APPLICATION	PLENUM OPENING		FLOOR OPENING	
		A	B	C	D
14–3/16 (360)	Upflow Applications on Combustible or Noncombustible Flooring (KGASB subbase not required)	12–11/16 (322)	21–5/8 (549)	13–5/16 (338)	22–1/4 (565)
	Downflow Applications on Noncombustible Flooring (KGASB subbase not required)	12–9/16 (319)	19 (483)	13–3/16 (335)	19–5/8 (498)
	Downflow applications on combustible flooring (KGASB subbase required)	11–13/16 (284)	19 (483)	13–7/16 (341)	20–5/8 (600)
	Downflow Applications on Combustible Flooring with CNPV, CNRV, CAR or CAP Coil Assembly or KCAKC coil box (KGASB subbase not required)	12–5/16 (319)	19 (483)	13–5/16 (338)	20 (508)
17–1/2 (445)	Upflow Applications on Combustible or Noncombustible Flooring (KGASB subbase not required)	16 (406)	21–5/8 (549)	16–5/8 (422)	22–1/4 (565)
	Downflow Applications on Noncombustible Flooring (KGASB subbase not required)	15–7/8 (403)	19 (483)	16–1/2 (419)	19–5/8 (498)
	Downflow applications on combustible flooring (KGASB subbase required)	15–1/8 (384)	19 (483)	16–3/4 (425)	20–5/8 (600)
	Downflow Applications on Combustible Flooring with CNPV, CNRV, CAR or CAP Coil Assembly or KCAKC coil box (KGASB subbase not required)	15–1/2 (394)	19 (483)	16–1/2 (419)	20 (508)
21 (533)	Upflow Applications on Combustible or Noncombustible Flooring (KGASB subbase not required)	19–1/2 (495)	21–5/8 (549)	20–1/8 (511)	22–1/4 (565)
	Downflow Applications on Noncombustible Flooring (KGASB subbase not required)	19–3/8 (492)	19 (483)	20 (508)	19–5/8 (498)
	Downflow applications on combustible flooring (KGASB subbase required)	18–5/8 (473)	19 (483)	20–1/4 (514)	20–5/8 (600)
	Downflow Applications on Combustible Flooring with CNPV, CNRV, CAR or CAP Coil Assembly or KCAKC coil box (KGASB subbase not required)	19 (483)	19 (483)	20 (508)	20 (508)
24–1/2 (622)	Upflow Applications on Combustible or Noncombustible Flooring (KGASB subbase not required)	23 (584)	21–1/8 (537)	23–5/8 (600)	22–1/4 (565)
	Downflow Applications on Noncombustible Flooring (KGASB subbase not required)	22–7/8 (581)	19 (483)	23–1/2 (597)	19–5/8 (498)
	Downflow applications on Combustible flooring (KGASB subbase required)	22–1/8 (562)	19 (483)	23–3/4 (603)	20–5/8 (600)
	Downflow Applications on Combustible Flooring with CNPV, CNRV, CAR or CAP Coil Assembly or KCAKC coil box (KGASB subbase not required)	22–1/2 (572)	19 (483)	23–1/2 (597)	20 (508)

PG8MVA

Filter Arrangement

⚠ WARNING

CARBON MONOXIDE POISONING HAZARD

Failure to follow this warning could result in personal injury, or death.

Never operate a furnace without a filter or with filter access door removed.

There are no provisions for an internal filter rack in these furnaces. A field-supplied accessory external filter rack is required.

Refer to the instructions supplied with the external filter rack for assembly and installation options.

AIR DUCTS

General Requirements

The duct system should be designed and sized according to accepted national standards such as those published by: Air Conditioning Contractors Association (ACCA), Sheet Metal and Air Conditioning Contractors National Association (SMACNA) or American Society of Heating, Refrigerating and Air Conditioning Engineers (ASHRAE) or consult *The Air Systems Design Guidelines* reference tables available from your local distributor. The duct system should be sized to handle the required system design CFM at the design external static pressure. The furnace airflow rates are provided in Table 4-Air Delivery-CFM (With Filter). When a furnace is installed so that the supply ducts carry air circulated by the furnace to areas outside the space containing the furnace, the return air shall also be handled by duct(s) sealed to the furnace casing and terminating outside the space containing the furnace.

Secure ductwork with proper fasteners for type of ductwork used. Seal supply- and return-duct connections to furnace with code approved tape or duct sealer.

NOTE: Flexible connections should be used between ductwork and furnace to prevent transmission of vibration.

Ductwork passing through unconditioned space should be insulated to enhance system performance. When air conditioning is used, a vapor barrier is recommended.

Maintain a 1-in. (25 mm) clearance from combustible materials to supply air ductwork for a distance of 36-in. (914 mm) horizontally from the furnace. See NFPA 90B or local code for further requirements.

Ductwork Acoustical Treatment

NOTE: Metal duct systems that do not have a 90 degree elbow and 10 ft. (3 M) of main duct to the first branch take-off may require internal acoustical lining. As an alternative, fibrous ductwork may be used if constructed and installed in accordance with the latest edition of SMACNA construction standard on fibrous glass ducts. Both acoustical lining and fibrous ductwork shall comply with NFPA 90B as tested by UL Standard 181 for Class 1 Rigid air ducts.

Supply Air Connections

For a furnace not equipped with a cooling coil, the outlet duct shall be provided with a removable access panel. This opening shall be accessible when the furnace is installed and shall be of such a size that the heat exchanger can be viewed for possible openings using light assistance or a probe can be inserted for sampling the air stream. The cover attachment shall prevent leaks.

Upflow and Horizontal Furnaces

Connect supply-air duct to flanges on furnace supply-air outlet. Bend flange upward to 90° with wide duct pliers. (See Fig. 14.) The supply-air duct must be connected to ONLY the furnace supply-outlet-air duct flanges or air conditioning coil casing (when used). DO NOT cut main furnace casing side to attach supply air duct, humidifier, or other accessories. All accessories MUST be connected to duct external to furnace main casing.

NOTE: For horizontal applications, the top most flange may be bent past 90° to allow the evaporator coil to hang on the flange temporarily while the remaining attachment and sealing of the coil are performed.

Downflow Furnaces

Connect supply-air duct to supply-air outlet on furnace. Bend flange inward past 90° with wide duct pliers (See Fig. 14.) The supply-air duct must be connected to ONLY the furnace supply outlet or air conditioning coil casing (when used). When installed on combustible material, supply-air duct must be connected to ONLY the factory-approved accessory subbase, or a factory-approved air conditioning coil casing. DO NOT cut main furnace casing to attach supply side air duct, humidifier, or other accessories. All accessories MUST be connected to duct external to furnace casing.

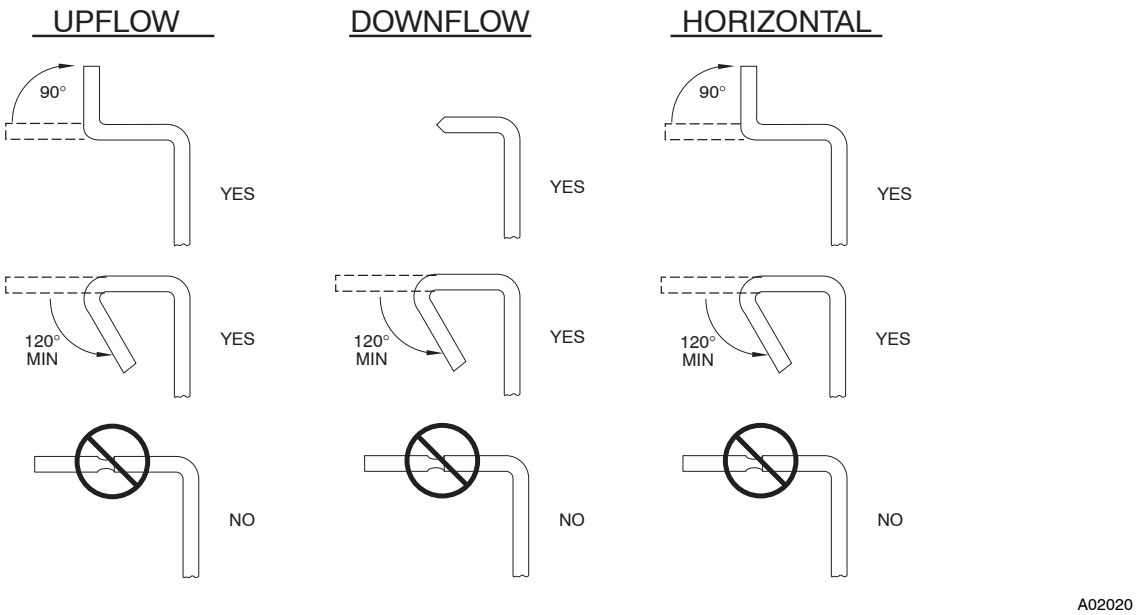

Fig. 14 - Duct Flanges

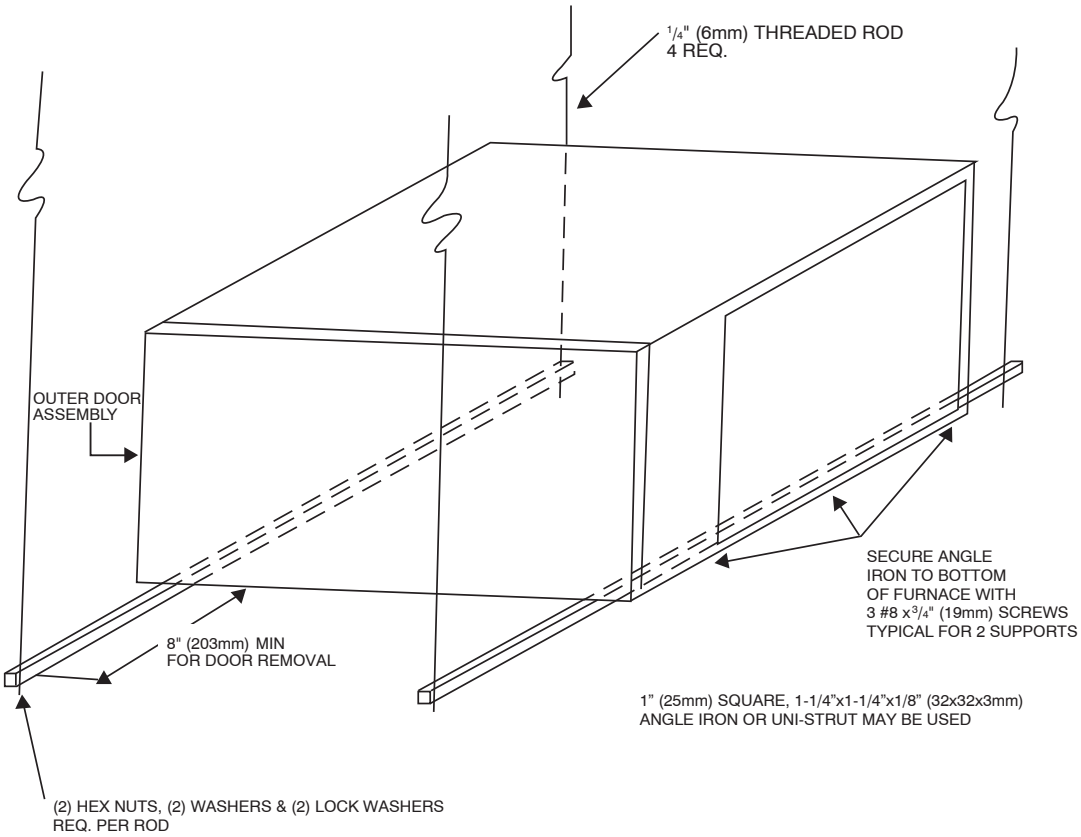

Fig. 15 - Horizontal Unit Suspension

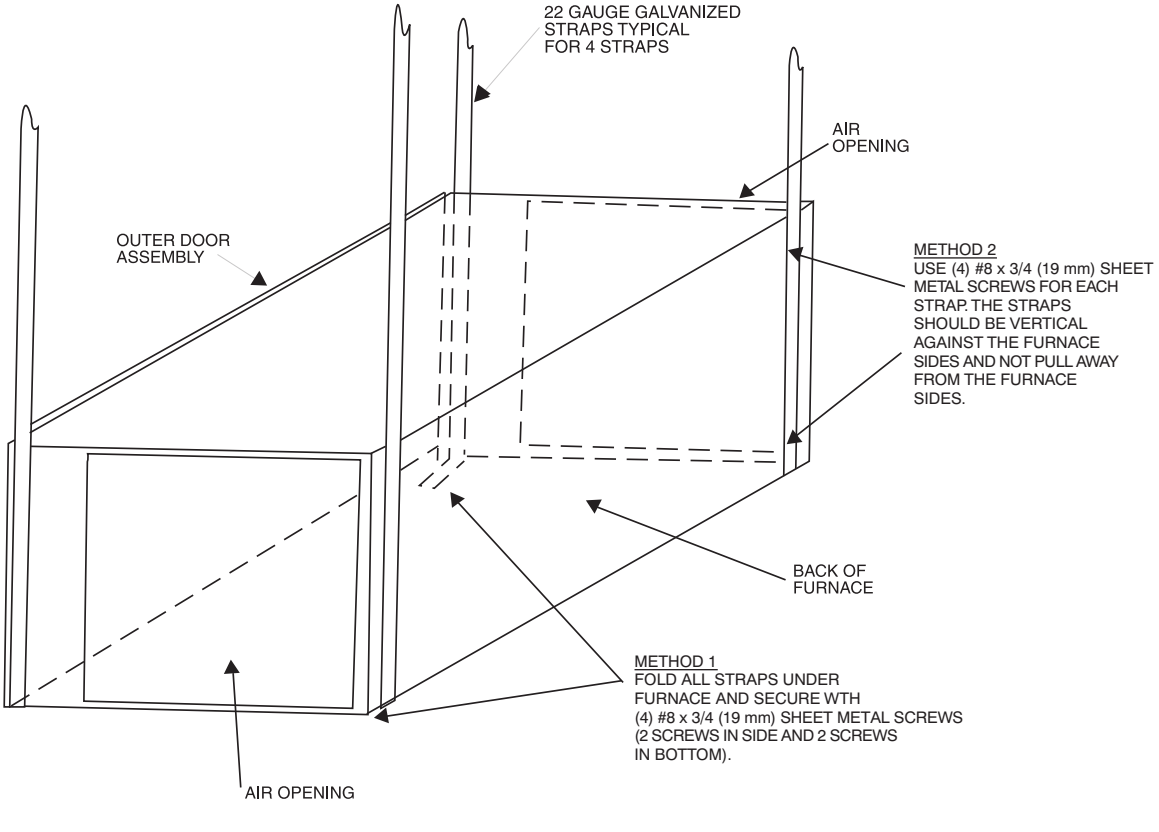

Fig. 16 - Horizontal Suspension with Straps

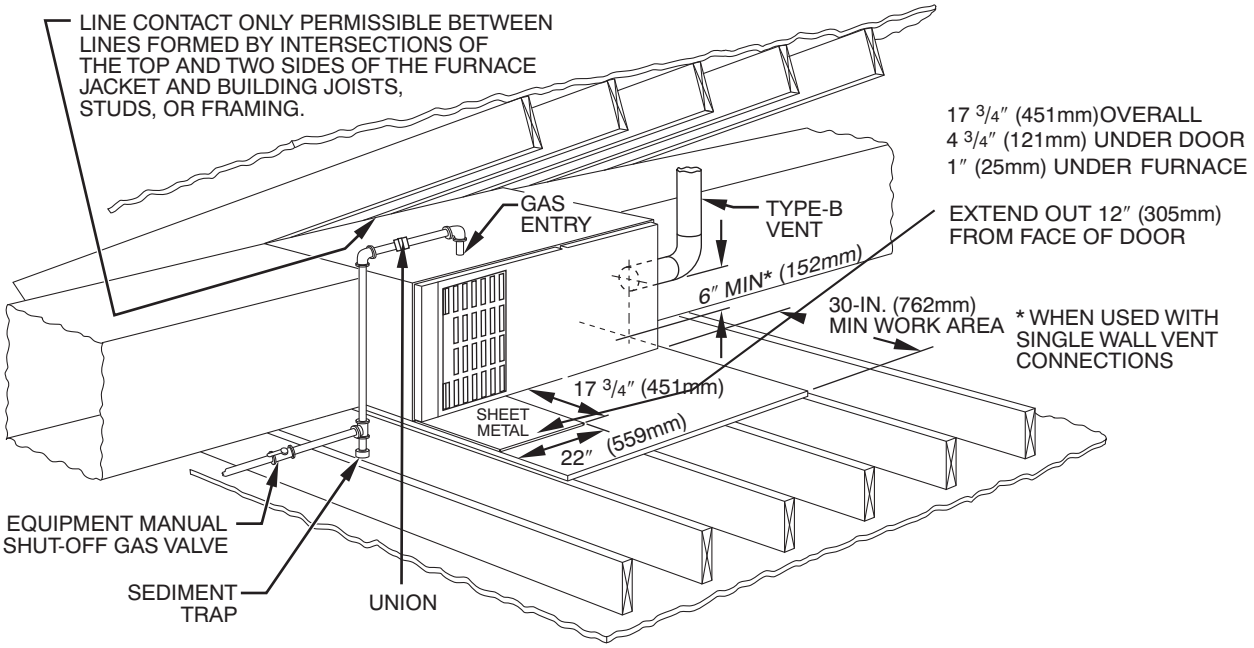

Fig. 17 - Typical Attic Installation

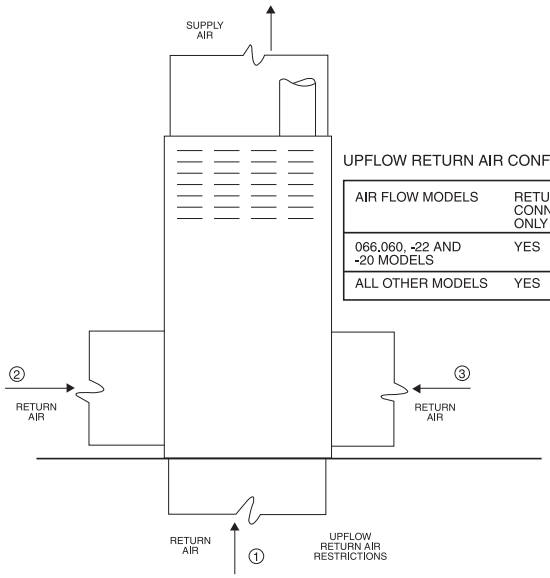

UPFLOW RETURN AIR CONFIGURATIONS AND RESTRICTIONS

AIR FLOW MODELS	RETURN AIR CONNECTION 1 ONLY	RETURN AIR CONNECTION 2 ONLY	RETURN AIR CONNECTION 3 ONLY	RETURN AIR COMBINATIONS OF 1, 2, AND 3
066,060, -22 AND -20 MODELS	YES	YES	YES	YES
ALL OTHER MODELS	YES	YES	YES	YES

Fig. 18 - Upflow Return Air Configurations and Restrictions

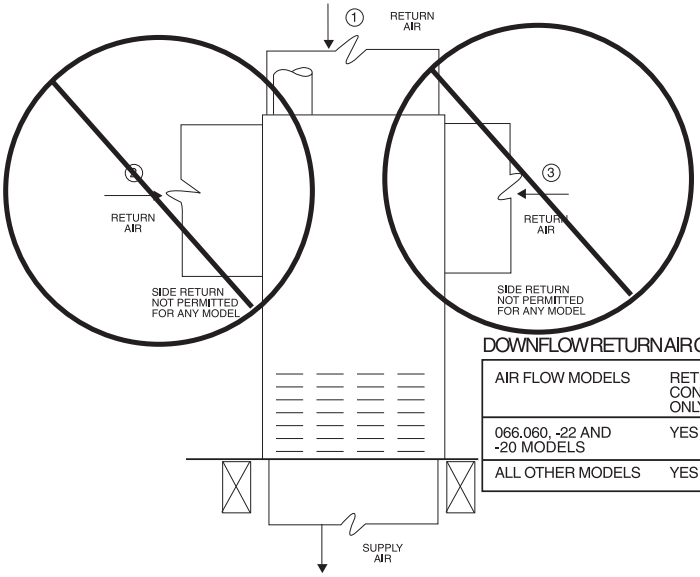

DOWNFLOW RETURN AIR CONFIGURATIONS AND RESTRICTIONS

AIR FLOW MODELS	RETURN AIR CONNECTION 1 ONLY	RETURN AIR CONNECTION 2 ONLY	RETURN AIR CONNECTION 3 ONLY	RETURN AIR COMBINATIONS OF 1, 2, AND 3
066.060, -22 AND -20 MODELS	YES	NO	NO	NO
ALL OTHER MODELS	YES	NO	NO	NO

A02163

Fig. 19 - Downflow Return Air Configurations and Restrictions

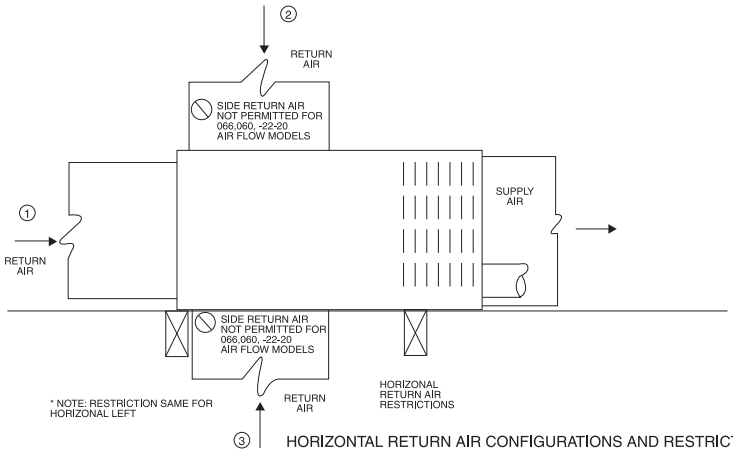

HORIZONTAL RETURN AIR CONFIGURATIONS AND RESTRICTIONS

AIR FLOW MODELS	RETURN AIR CONNECTION 1 ONLY	RETURN AIR CONNECTION 2 ONLY	RETURN AIR CONNECTION 3 ONLY	RETURN AIR COMBINATIONS OF 1, 2, AND 3
066.060, -22 AND -20 MODELS	YES	NO	NO	NO
ALL OTHER MODELS	YES	YES	YES	YES

A02162

Fig. 20 - Horizontal Return Air Configurations and Restrictions

Table 4 – Air Delivery - CFM (With Filter)*

Unit Size	Operating Mode	CFM Airflow Setting	External Static Pressure Range* (In. W.C.)	External Static Pressure (ESP) (IN. W.C.)									
				0.1	0.2	0.3	0.4	0.5	0.6	0.7	0.8	0.9	1
036070				AIRFLOW (CFM)									
††	Low Heat	735 (615)†	0–0.50	735	735	735	735	725					
	High Heat	1180 (1060)†	0–1.0	1160	1165	1175	1180	1180	1180	1180	1180	1180	1175
††	1–1/2–Ton Cooling	525	0–0.50‡	515	500	500	490	485					
††	2–Ton A/C Cooling	700	0–0.50‡	690	680	675	680	675					
	2–1/2–Ton A/C Cooling	875	0–1.0‡	875	875	875	870	865	855	850	835	825	820
	3–Ton A/C Cooling	1050	0–1.0‡	1050	1050	1050	1050	1050	1050	1045	1035	1020	1000
	3–1/2–Ton A/C Cooling	1225	0–1.0	1220	1225	1225	1225	1225	1220	1205	1190	1185	1170
	Maximum	1400	0–1.0	1395	1400	1400	1400	1395	1385	1370	1340	1300	1245
048090													
	Low Heat	985 (825)†	0–1.0	950	970	985	985	985	985	985	985	985	980
	High Heat	1210 (1090)†	0–1.0	1190	1205	1210	1210	1210	1210	1210	1210	1210	1200
††	1–1/2–Ton A/C Cooling	525	0–0.50‡	525	520	525	495	475					
††	2–Ton A/C Cooling	700	0–0.50‡	680	680	680	675	670					
	2–1/2–Ton A/C Cooling	875	0–1.0‡	815	845	845	855	850	850	845	835	820	805
	3–Ton A/C Cooling	1050	0–1.0‡	1005	1005	1015	1035	1040	1040	1035	1030	1025	1010
	3–1/2–Ton A/C Cooling	1225	0–1.0	1190	1200	1200	1205	1205	1215	1205	1200	1185	1170
	4–Ton A/C Cooling	1400	0–1.0	1350	1370	1390	1390	1400	1390	1380	1380	1360	1340
	Maximum	1600	0–1.0	1595	1600	1600	1600	1595	1555	1505	1465	1430	1390
060110***													
	Low Heat	1320 (1110)†	0–1.0	1275	1295	1315	1320	1320	1320	1320	1320	1320	1315
	High Heat	1475 (1330)†	0–1.0	1460	1465	1475	1475	1475	1475	1475	1475	1465	1465
††	2–Ton A/C Cooling	700	0–0.50‡	700	700	700	700	700					
††	2–1/2–Ton A/C Cooling	875	0–0.50‡	875	875	875	875	875					
††	3–Ton A/C Cooling	1050	0–0.50‡	1050	1050	1050	1050	1050					
	3–1/2–Ton A/C Cooling	1225	0–1.0‡	1225	1225	1225	1225	1225	1225	1225	1225	1225	1225
	4–Ton A/C Cooling	1400	0–1.0‡	1400	1400	1400	1400	1400	1400	1400	1400	1400	1400
	5–Ton A/C Cooling	1750	0–1.0‡	1750	1750	1750	1750	1750	1750	1750	1750	1740	1725
	6–Ton A/C Cooling	2100	0–1.0	2100	2100	2100	2100	2090	2075	2055	2040	2005	1970
	Maximum	2200	0–1.0	2200	2190	2190	2180	2155	2145	2125	2100	2080	2020
066135													
	Low Heat	1700 (1430)†	0–1.0	1700	1700	1700	1700	1700	1695	1700	1695	1685	1670
	High Heat	1915 (1725)†	0–1.0	1900	1905	1915	1915	1915	1915	1915	1915	1915	1915
††	2–Ton A/C Cooling	700	0–0.50‡	700	700	700	700	665					
††	2–1/2–Ton A/C Cooling	875	0–0.50‡	870	870	865	865	865					
††	3–Ton A/C Cooling	1050	0–0.50‡	1010	1030	1050	1050	1050					
	3–1/2–Ton A/C Cooling	1225	0–1.0‡	1155	1180	1200	1210	1220	1225	1225	1225	1225	1225
	4–Ton A/C Cooling	1400	0–1.0‡	1395	1400	1400	1400	1400	1400	1400	1390	1375	1355
	5–Ton A/C Cooling	1750	0–1.0‡	1740	1750	1750	1750	1735	1740	1735	1730	1715	1700
	6–Ton A/C Cooling	2100	0–1.0	2075	2085	2090	2100	2100	2100	2090	2080	2055	2025
	Maximum	2200	0–1.0	2180	2195	2200	2200	2200	2200	2185	2165	2140	2095

*Actual external static pressure (ESP) can be determined by using the fan laws (CFM 2 proportional to ESP); such as, a system with 1180 CFM at 0.5 ESP would operate at cooling airflow of 1050 CFM at 0.4 ESP and low–heating airflow of 735 CFM at 0.19 ESP.

†Comfort airflow values are shown in parenthesis. Comfort airflow is selected when the low–heat rise adjustment switch (SW1–3) is OFF and the comfort/efficiency switch (SW1–4) is ON.

‡Ductwork must be sized for high–heating CFM within the operational range of ESP.

††Operation within the blank areas of the chart is not recommended because high–heat operation will be above 1.0 ESP.

***All airflow on 110 size furnace are 5% less on side return only installations.

Return Air Connections

⚠ WARNING

FIRE HAZARD

A failure to follow this warning could cause personal injury, death and/or property damage.

Never connect return-air ducts to the back of the furnace. Follow instructions below.

Downflow Furnaces

The return-air duct must be connected to return-air opening (bottom inlet) as shown in Fig. 3. DO NOT cut into casing sides (left or right). Side opening is permitted for only upflow and certain horizontal furnaces. Bypass humidifier connections should be made at ductwork or coil casing sides exterior to furnace. (See Fig. 19.)

Upflow and Horizontal Furnaces

The return-air duct must be connected to bottom, sides (left or right), or a combination of bottom and side(s) of main furnace casing as shown in Fig. 3. Bypass humidifier may be attached into unused return air side of the furnace casing. (See Fig. 18 and 20.) Not all horizontal furnace models are approved for side return air connections. (See Fig. 20.)

GAS PIPING

⚠ WARNING

FIRE OR EXPLOSION HAZARD

Failure to follow this warning could result in personal injury, death, and/or property damage.

Never purge a gas line into a combustion chamber. Never test for gas leaks with an open flame. Use a commercially available soap solution made specifically for the detection of leaks to check all connections. A fire or explosion may result causing property damage, personal injury or loss of life.

⚠ WARNING

FIRE OR EXPLOSION HAZARD

Failure to follow this warning could result in personal injury, death, and/or property damage.

Use proper length of pipe to avoid stress on gas control manifold and a gas leak.

⚠ WARNING

FIRE OR EXPLOSION HAZARD

Failure to follow this warning could result in personal injury, death, and/or property damage.

Gas valve inlet and/or inlet pipe must remain capped until gas supply line is permanently installed to protect the valve from moisture and debris. Also, install a sediment trap in the gas supply piping at the inlet to the gas valve.

Gas piping must be installed in accordance with national and local codes. Refer to current edition of NFGC in the U.S.

Installations must be made in accordance with all authorities having jurisdiction. If possible, the gas supply line should be a separate line running directly from meter to furnace.

NOTE: In the state of Massachusetts:

1. Gas supply connections MUST be performed by a licensed plumber or gas fitter.
2. When flexible connectors are used, the maximum length shall not exceed 36 in. (915 mm).
3. When lever handle type manual equipment shutoff valves are used, they shall be T-handle valves.
4. The use of copper tubing for gas piping is NOT approved by the state of Massachusetts.

Refer to Table 5 for recommended gas pipe sizing. Risers must be used to connect to furnace and to meter. Support all gas piping with appropriate straps, hangers, etc. Use a minimum of 1 hanger every 6 ft. (1.8 M). Joint compound (pipe dope) should be applied sparingly and only to male threads of joints. Pipe dope must be resistant to the action of propane gas.

Table 5 – Maximum Capacity of Pipe

NOMINAL IRON PIPE SIZE IN. (MM)	INTERNAL DIA. IN. (MM)	LENGTH OF PIPE – FT (M)				
		10 (3.0)	20 (6.0)	30 (9.1)	40 (12.1)	50 (15.2)
1/2 (12.7)	0.622(158)	175	120	97	82	73
3/4 (19.0)	0.824 (20.9)	360	250	200	170	151
1 (25.4)	1.049 (26.6)	680	465	375	320	285
1-1/4 (31.8)	1.380 (35.0)	1400	950	770	660	580
1-1/2 (38.1)	1.610 (40.9)	2100	1460	1180	990	900

* Cubic ft of gas per hr for gas pressures of 0.5 psig (14– In. W.C.) or less and a pressure drop of 0.5– In. W.C. (based on a 0.60 specific gravity gas). Ref: Table 6 and 9.2 NFGC.

⚠ WARNING

FIRE OR EXPLOSION HAZARD

A failure to follow this warning could result in personal injury, death, and/or property damage.

If local codes allow the use of a flexible gas appliance connector, always use a new listed connector. Do not use a connector which has previously served another gas appliance. Black iron pipe shall be installed at the furnace gas control valve and extend a minimum of 2-in. (51 mm) outside the furnace.

⚠ CAUTION

FURNACE DAMAGE HAZARD

Failure to follow this caution may result in furnace damage.

Connect gas pipe to furnace using a backup wrench to avoid damaging gas controls and burner misalignment.

An accessible manual equipment shutoff valve MUST be installed external to furnace casing and within 6 ft. (1.8 M) of furnace. A 1/8-in. (3 mm) NPT plugged tapping, accessible for test gauge connection, MUST be installed immediately upstream of gas supply connection to furnace and downstream of manual equipment shutoff valve.

NOTE: The furnace gas control valve inlet pressure tap connection is suitable to use as test gauge connection providing test pressure DOES NOT exceed maximum 0.5 psig (14-In. W.C.) stated on gas control valve. (See Fig. 50.)

Some installations require gas entry on right side of furnace (as viewed in upflow). (See Fig. 21.)

Install a sediment trap in riser leading to furnace as shown in Fig. 22. Connect a capped nipple into lower end of tee. Capped nipple should extend below level of furnace gas controls. Place a ground joint union between furnace gas control valve and exterior manual equipment gas shutoff valve.

A 1/8-in. (3 mm) NPT plugged tapping, accessible for test gauge connection, MUST be installed immediately upstream of gas supply connection to furnace and downstream of manual equipment shutoff valve.

Piping should be pressure and leak tested in accordance with the current addition of the NFGC in the United States, local, and national plumbing and gas codes before the furnace has been connected. After all connections have been made, purge lines and check for leakage at furnace prior to operating furnace.

If pressure exceeds 0.5 psig (14-In. W.C.), gas supply pipe must be disconnected from furnace and capped before and during supply pipe pressure test. If test pressure is equal to or less than 0.5 psig (14-In. W.C.), turn off electric shutoff switch located on furnace gas control valve and accessible manual equipment shutoff valve before and during supply pipe pressure test. After all connections have been made, purge lines and check for leakage at furnace prior to operating furnace.

The gas supply pressure shall be within the maximum and minimum inlet supply pressures marked on the rating plate with the furnace burners ON and OFF.

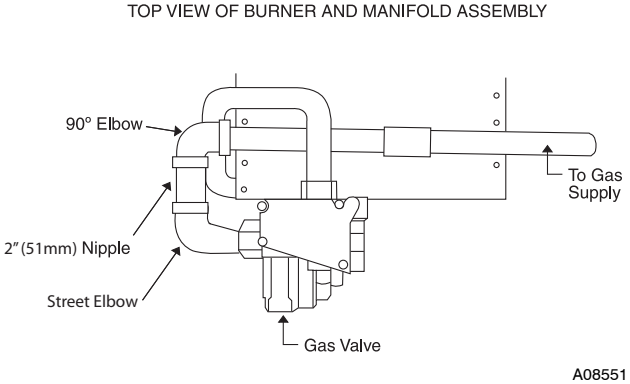

Fig. 21 - Burner and Manifold

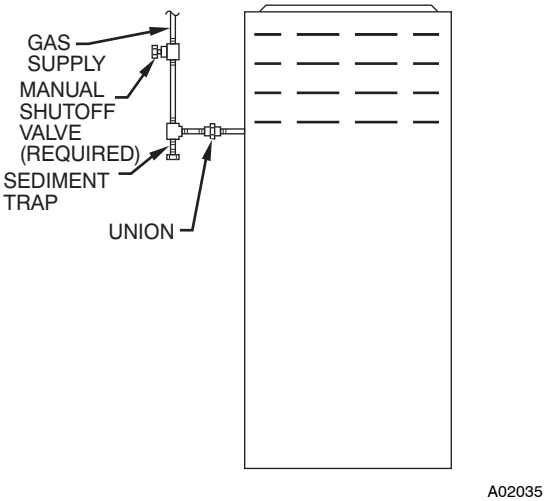

Fig. 22 - Typical Gas Pipe Arrangement

ELECTRICAL CONNECTIONS

⚠ WARNING

ELECTRICAL SHOCK HAZARD

Failure to follow this warning could result in personal injury or death.

Blower access panel door switch opens 115-v power to control. No component operation can occur. Do not bypass or close switch with panel removed.

See Fig. 25 for field wiring diagram showing typical field 115-v wiring. Check all factory and field electrical connections for tightness.

Field-supplied wiring shall conform with the limitations of 63°F (33°C) rise.

⚠ WARNING

ELECTRICAL SHOCK AND FIRE HAZARD

Failure to follow this warning could result in personal injury, death, or property damage.

The cabinet MUST have an uninterrupted or unbroken ground according to NEC ANSI/NFPA 70-2011 or local codes to minimize personal injury if an electrical fault should occur. This may consist of electrical wire, conduit approved for electrical ground or a listed, grounded power cord (where permitted by local code) when installed in accordance with existing electrical codes. Refer to the power cord manufacturer's ratings for proper wire gauge. Do not use gas piping as an electrical ground.

⚠ CAUTION

FURNACE MAY NOT OPERATE HAZARD

Failure to follow this caution may result in intermittent furnace operation.

Furnace control must be grounded for proper operation or else control will lock out. Control must remain grounded through green/yellow wire routed to gas valve and manifold bracket screw.

115-V Wiring

Verify that the voltage, frequency, and phase correspond to that specified on unit rating plate. Also, check to be sure that service provided by utility is sufficient to handle load imposed by this equipment. Refer to rating plate or Table 6 for equipment electrical specifications.

U.S. Installations: Make all electrical connections in accordance with National Electrical Code (NEC) ANSI/NFPA 70-2011 and any local codes or ordinances that might apply.

Table 6 – Electrical Data

FURNACE SIZE	VOLTS–HERTZ–PHASE	OPERATING VOLTAGE RANGE		MAX. UNIT AMPS	UNIT AMPACITY #	MAX. WIRE LENGTH – FT (M)‡	MAX. FUSE OR CKT BKR AMPS †	MIN. WIRE GAUGE
		Max.	Min.					
070–12/036070	115–60–1	127	104	9.0	11.99	30 (9.0)	15	14
090–16/048090	115–60–1	127	104	9.6	12.56	29 (8.8)	15	14
110–20/060110	115–60–1	127	104	15.1	19.33	29 (8.8)	20	12
135–22/066135	115–60–1	127	104	14.9	19.13	30 (9.0)	20	12

* Permissible limits of the voltage range at which the unit operates satisfactorily.

Unit ampacity = 125 percent of largest operating component's full load amps plus 100 percent of all other potential operating components' (EAC, humidifier, etc.) full load amps.

†Time–delay type is recommended.

‡Length shown is as measured 1 way along wire path between furnace and service panel for maximum 2 percent voltage drop.

⚠ WARNING

FIRE HAZARD

Failure to follow this warning could result in personal injury, death, or property damage.

Do not connect aluminum wire between disconnect switch and furnace. Use only copper wire.

Use a separate, fused branch electrical circuit with a properly sized fuse or circuit breaker for this furnace. See Table 6 for wire size and fuse specifications. A readily accessible means of electrical disconnect must be located within sight of the furnace.

NOTE: Proper polarity must be maintained for 115-v wiring. If polarity is incorrect, control LED status indicator light will flash rapidly and furnace will NOT operate.

J-Box Relocation

NOTE: If factory location of J-Box is acceptable, go to next section (ELECTRICAL CONNECTION to J-Box).

NOTE: On 14-in. (356 mm) wide casing models, the J-Box shall not be relocated to other side of furnace casing when the vent pipe is routed within the casing.

1. Remove and save two screws holding J-Box. (See Fig. 23.)

NOTE: The J-Box cover need not be removed from the J-Box in order to move the J-Box. Do NOT remove green ground screw inside J-Box. (See Fig. 23.)

2. Cut wire tie on loop in furnace wires attached to J-Box.
3. Move J-Box to desired location.
4. Fasten J-Box to casing with the two screws removed in Step 1.
5. Route J-Box wires within furnace away from sharp edges, rotating parts and hot surfaces.

Electrical Connection to J-Box

Electrical Box on Furnace Casing Side (See Fig. 24.)

⚠ WARNING

FIRE OR ELECTRICAL SHOCK HAZARD

Failure to follow this warning could result in personal injury, death, or property damage.

If field-supplied manual disconnect switch is to be mounted on furnace casing side, select a location where a drill or fastener cannot damage electrical or gas components.

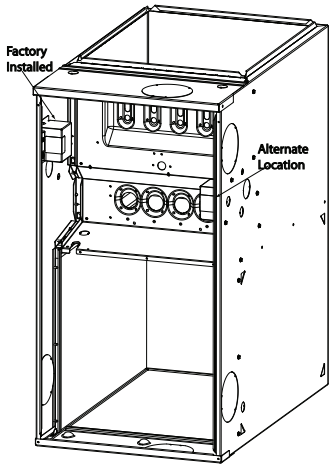

A10291

Fig. 23 - Relocating J-Box

1. Select and remove a hole knockout in the casing where the electrical box is to be installed.

NOTE: Check that duct on side of furnace will not interfere with installed electrical box.

2. Remove the desired electrical box hole knockout and position the hole in the electrical box over the hole in the furnace casing.
3. Fasten the electrical box to casing by driving two field-supplied screws from inside electrical box into casing steel.
4. Remove and save two screws holding J-Box. (See Fig. 23.)
5. Pull furnace power wires out of 1/2-in. (12 mm) diameter hole in J-Box. Do not loosen wires from strain-relief wire-tie on outside of J-Box.
6. Route furnace power wires through holes in casing and electrical box and into electrical box.
7. Pull field power wires into electrical box.
8. Remove cover from furnace J-Box.
9. Route field ground wire through holes in electrical box and casing, and into furnace J-Box.
10. Reattach furnace J-Box to furnace casing with screws removed in Step 4.
11. Secure field ground wire to J-Box green ground screw.
12. Complete electrical box wiring and installation. Connect line voltage leads as shown in Fig. 24. Use best practices (NEC in U.S. for wire bushings, strain relief, etc.
13. Reinstall cover to J-Box. Do not pinch wires between cover and bracket.

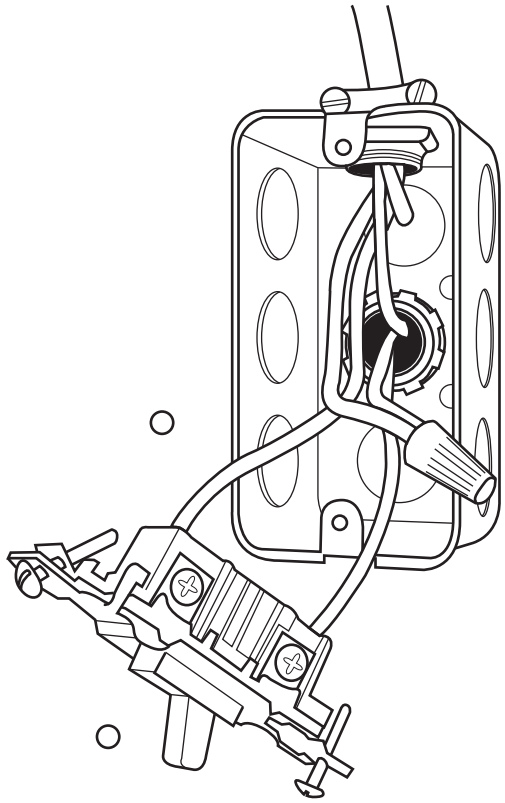

A10141

Fig. 24 - Field-Supplied Electrical Box on Furnace Casing

Power Cord Installation in Furnace J-Box

NOTE: Power cords must be able to handle the electrical requirements listed in Table 5. Refer to power cord manufacturer's listings.

1. Remove cover from J-Box.
2. Route listed power cord through 7/8-in. (22 mm) diameter hole in J-Box.
3. Secure power cord to J-Box bracket with a strain relief bushing or a connector approved for the type of cord used.
4. Secure field ground wire to green ground screw on J-Box bracket.
5. Connect line voltage leads as shown in Fig. 25.
6. Reinstall cover to J-Box. Do not pinch wires between cover and bracket.

BX Cable Installation in Furnace J-Box

1. Remove cover from J-Box.
2. Route BX cable into 7/8-in. (22 mm) diameter hole in J-Box.
3. Secure BX cable to J-Box bracket with connectors approved for the type of cable used.
4. Secure field ground wire to green ground screw on J-Box bracket.
5. Connect line voltage leads as shown in Fig. 25.
6. Reinstall cover to J-Box. Do not pinch wires between cover and bracket.

24-V Wiring

Make field 24-v connections at the 24-v terminal strip. (See Fig. 25 - 34.) Connect terminal Y/Y2 as shown in Fig. 27-34 for proper cooling operation. Use only AWG No. 18, color-coded, copper thermostat wire.

The 24-v circuit contains an automotive-type, 3-amp. fuse located on the control. Any direct shorts during installation, service, or maintenance could cause this fuse to blow. If fuse replacement is required, use ONLY a 3-amp. fuse of identical size.

ACCESSORIES

1. Electronic Air Cleaner (EAC)
   Connect an accessory Electronic Air Cleaner (if used) using 1/4-in female quick connect terminals to the two male 1/4-in quick-connect terminals on the control board marked EAC-1 and EAC-2. The terminals are rated for 115VAC, 1.0 amps maximum and are energized during blower motor operation. (See Fig. 26.)
2. Humidifier (HUM)
   Connect an accessory 24 VAC, 0.5 amp. maximum humidifier (if used) to the 1/4-in male quick-connect HUM terminal and COM-24V screw terminal on the control board thermostat strip. The HUM terminal is energized when blower is energized in heating. (See Fig. 26.)

NOTE: DO NOT connect furnace control HUM terminal to HUM (humidifier) terminal on thermostat, zone controller or similar device. See thermostat or zone controller manufacturer's instructions for proper connection.

VENTING

The furnace shall be connected to a listed factory built chimney or vent, or a clay-tile lined masonry or concrete chimney. Venting into an unlined masonry chimney or concrete chimney is prohibited.

When an existing Category I furnace is removed or replaced, the original venting system, may no longer be sized to properly vent the attached appliances. An improperly sized Category I venting system could cause the formation of condensate in the furnace and vent, leakage of condensate and combustion products, and spillage of combustion products into the living space.

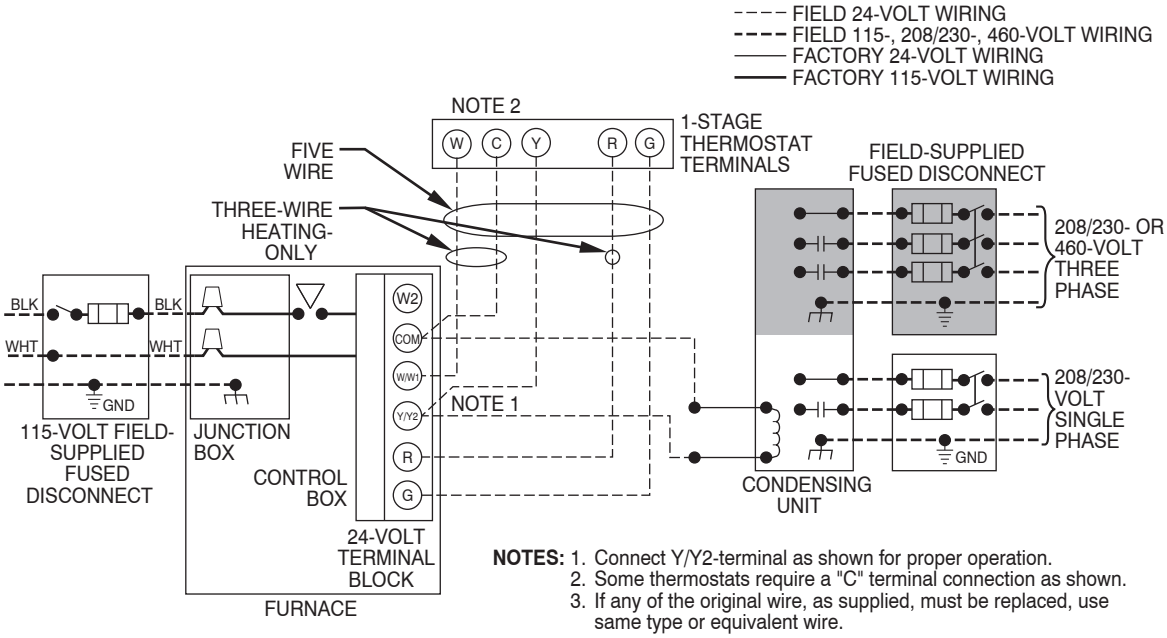

Fig. 25 - Field Wiring Diagram

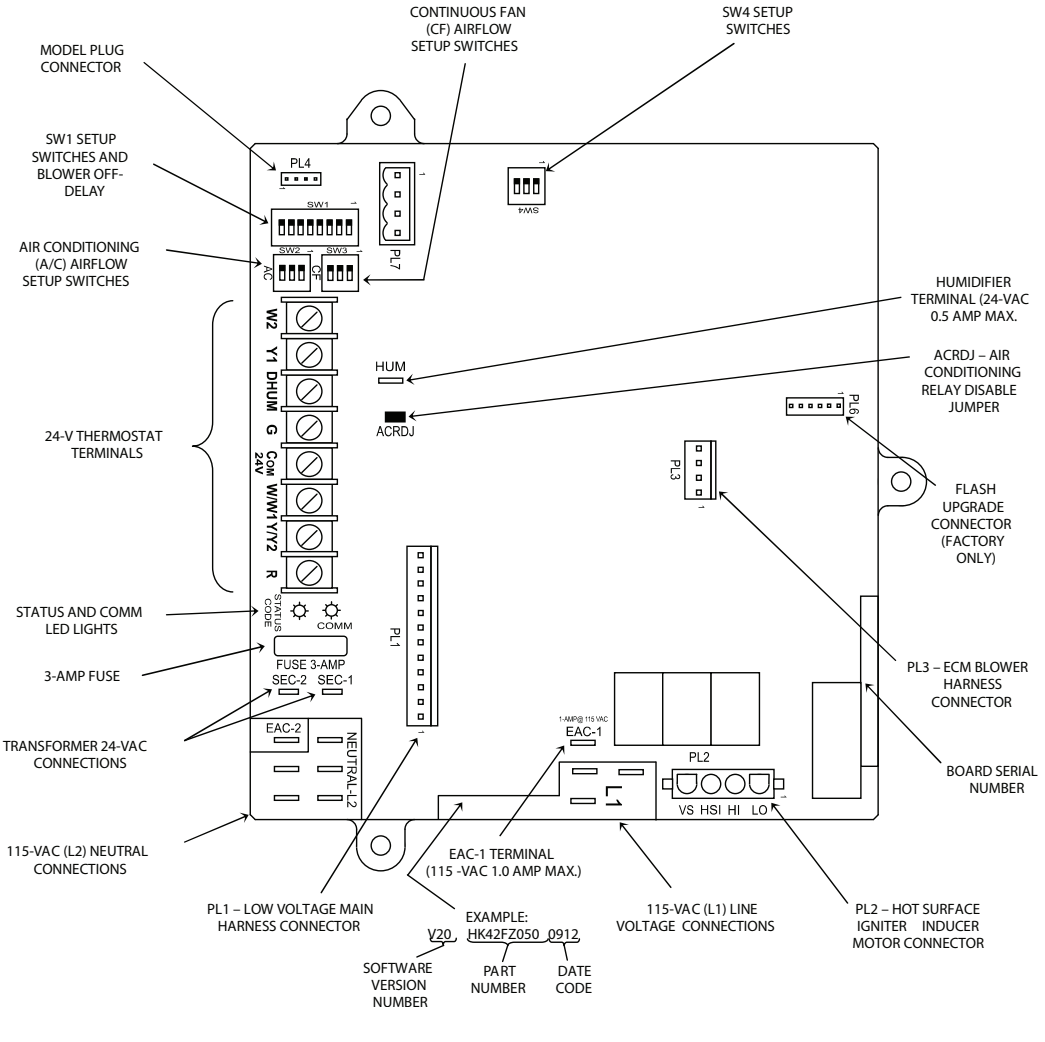

Fig. 26 - Variable Speed Furnace Control for ECM Blower Motor

⚠ WARNING

CARBON MONOXIDE POISONING HAZARD

Failure to follow the steps outlined below for each appliance connected to the venting system being placed into operation could result in carbon monoxide poisoning or death.

The following steps shall be followed for each appliance connected to the venting system being placed into operation, while all other appliances connected to the venting system are not in operation:

1. Seal any unused openings in venting system.
2. Inspect the venting system for proper size and horizontal pitch, as required in the National Fuel Gas Code, NFPA 54/ANSI Z223.1-2009 and these instructions. Determine that there is no blockage or restriction, leakage, corrosion and other deficiencies, which could cause an unsafe condition.
3. As far as practical, close all building doors and windows and all doors between the space in which the appliance(s) connected to the venting system are located and other spaces of the building.
4. Close fireplace dampers.
5. Turn on clothes dryers and any appliance not connected to the venting system. Turn on any exhaust fans, such as range hoods and bathroom exhausts, so they are operating at maximum speed. Do not operate a summer exhaust fan.
6. Follow the lighting instructions. Place the appliance being inspected into operation. Adjust the thermostat so appliance is operating continuously.
7. Test for spillage from draft hood equipped appliances at the draft hood relief opening after 5 minutes of main burner operation. Use the flame of a match or candle.
8. If improper venting is observed during any of the above tests, the venting system must be corrected in accordance with the National Fuel Gas Code, NFPA 54/ANSI Z223.1-2009.
9. After it has been determined that each appliance connected to the venting system properly vents when tested as outlined above, return doors, windows, exhaust fans, fireplace dampers and any other gas-fired burning appliance to their previous conditions of use.

Vent system or vent connectors may need to be resized. Vent systems or vent connectors must be sized to approach minimum size as determined using appropriate table found in the current edition of NFGC.

General Venting Requirements

Follow all safety codes for proper vent sizing and installation requirements, including local building codes, the National Fuel Gas Code NFPA 54/ANSI Z223.1-2009 (NFGC), Parts 12 and 13 in the United States, the local building codes, and furnace and vent manufacturers' instructions.

The following information and warning must be considered in addition to the requirements defined in the NFGC.

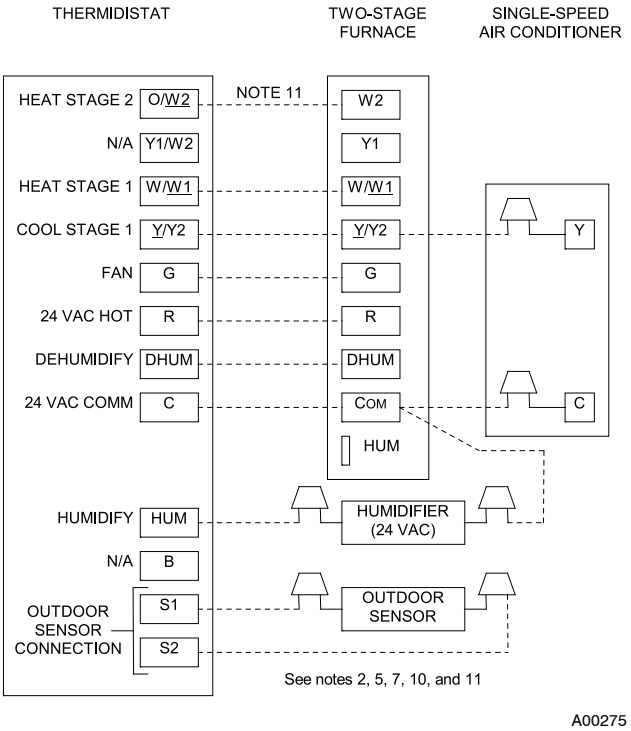

Fig. 27 - Two-Stage Furnace with Single-Speed Air Conditioner

⚠ WARNING

CARBON MONOXIDE POISONING HAZARD

Failure to follow this warning could result in personal injury or death.

Do not bypass the draft safeguard switch, as an unsafe condition could exist which must be corrected.

1. If a vent (common or dedicated) becomes blocked, the furnace will be shut off by the draft safeguard switch located on the vent elbow.
2. Two-stage furnaces require Type B vent connectors outside the casing in all configurations. Single wall vent connector may be used inside the furnace casing with the transition to Type B vent outside the furnace casing. Size the connector so that the FAN-Min vent connector capacity is equal to or lower than the low fire rate of the furnace and the FAN-Max vent connector capacity is equal to or higher than the furnace high fire rate.
3. Do not vent this Category I furnace into a single wall dedicated or common vent. The dedicated or common vent is considered to be the vertical portion of the vent system that terminates outdoors.
4. Vent connectors serving Category I furnaces shall not be connected into any portion of a mechanical draft system operating under positive pressure.
5. Do not vent this appliance with any solid fuel burning appliance.
6. Category I furnaces must be vented vertically or nearly vertically unless equipped with a listed mechanical venter. See SIDEWALL VENTING section.
7. Do not vent this appliance into an unlined masonry chimney. Refer to Chimney Inspection Chart, Fig. 35.

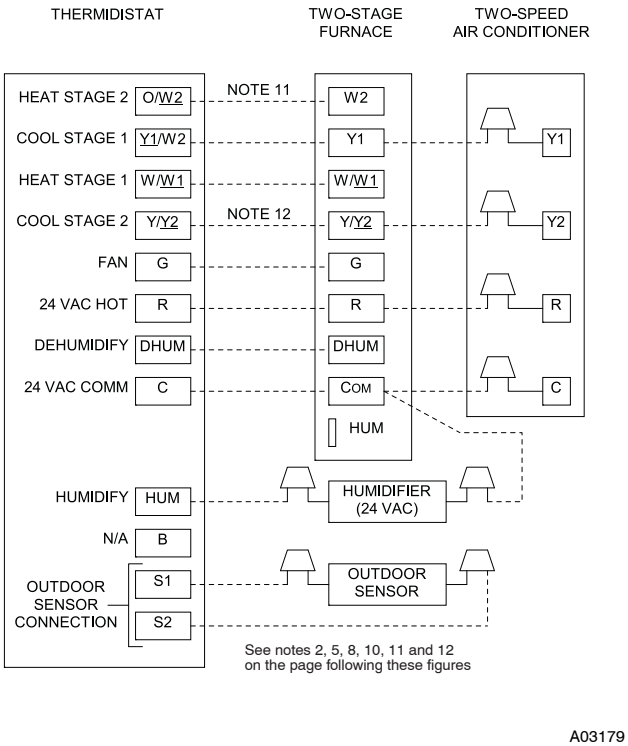

Fig. 28 - Two-Stage Furnace with Two-Speed Air Conditioner

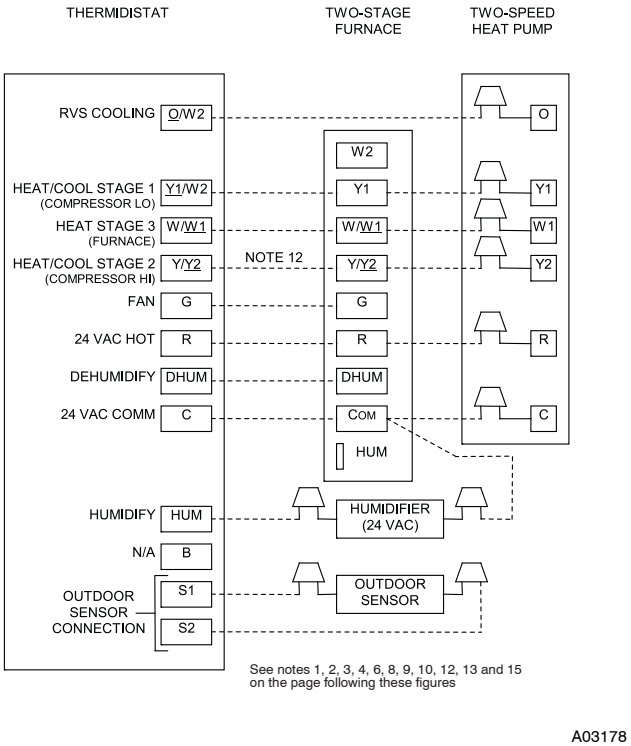

Fig. 30 - Two-Stage Furnace with Two-Speed Heat Pump (Dual Fuel)

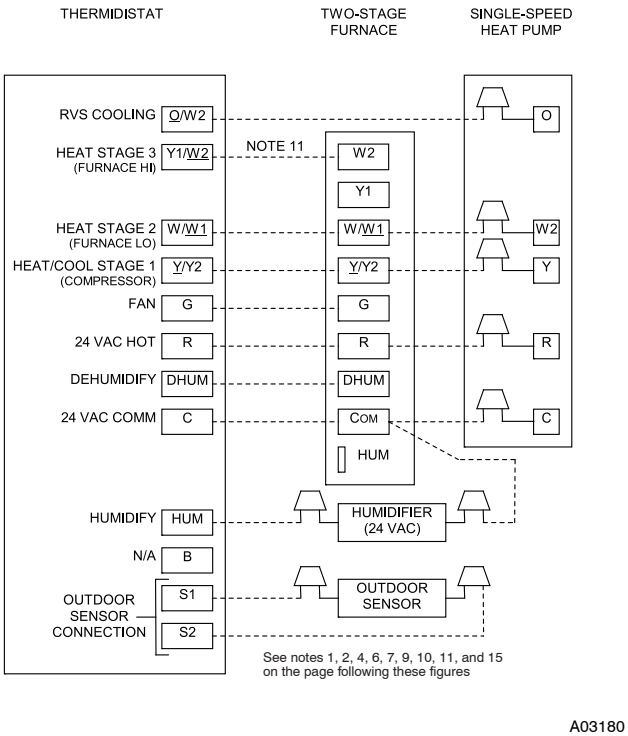

Fig. 29 - Two-Stage Furnace with Single-Speed Heat Pump (Dual Fuel)

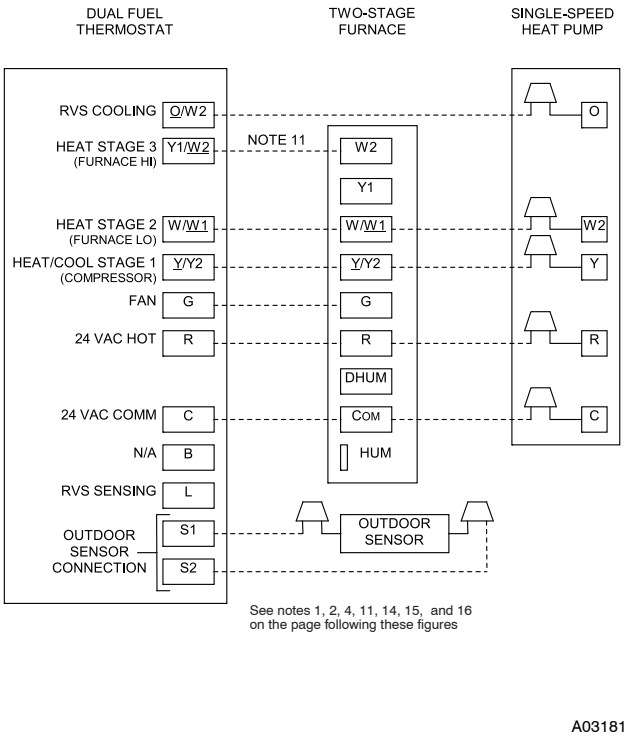

Fig. 31 - Dual-Fuel Thermostat with Two-Stage Furnace and Single-Speed Heat Pump

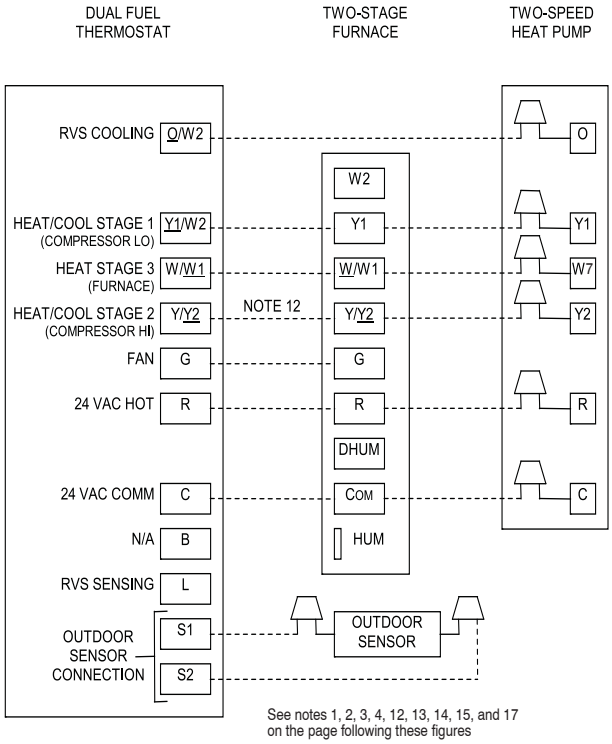

Fig. 32 - Dual-Fuel Thermostat with Two-Stage Furnace and Two-Speed Heat Pump

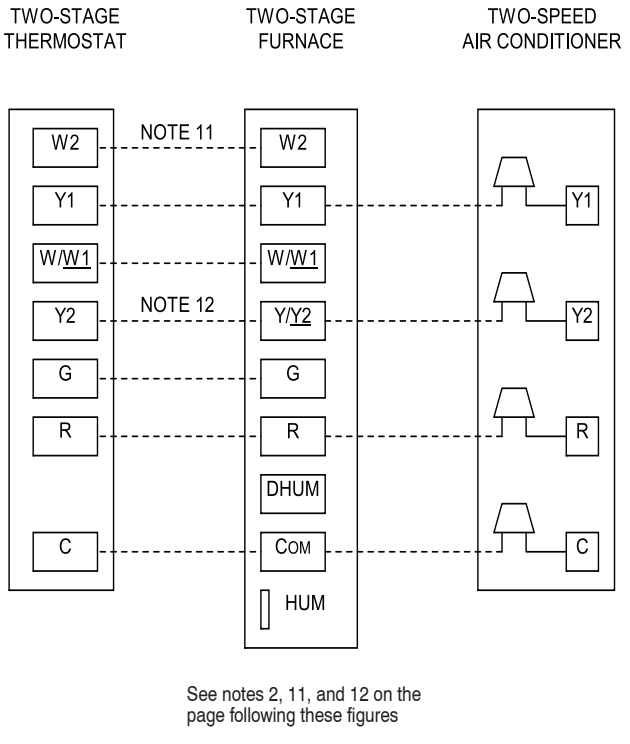

Fig. 33 - Two-Stage Thermostat with Two-Stage Furnace and Two-Speed Air Conditioner

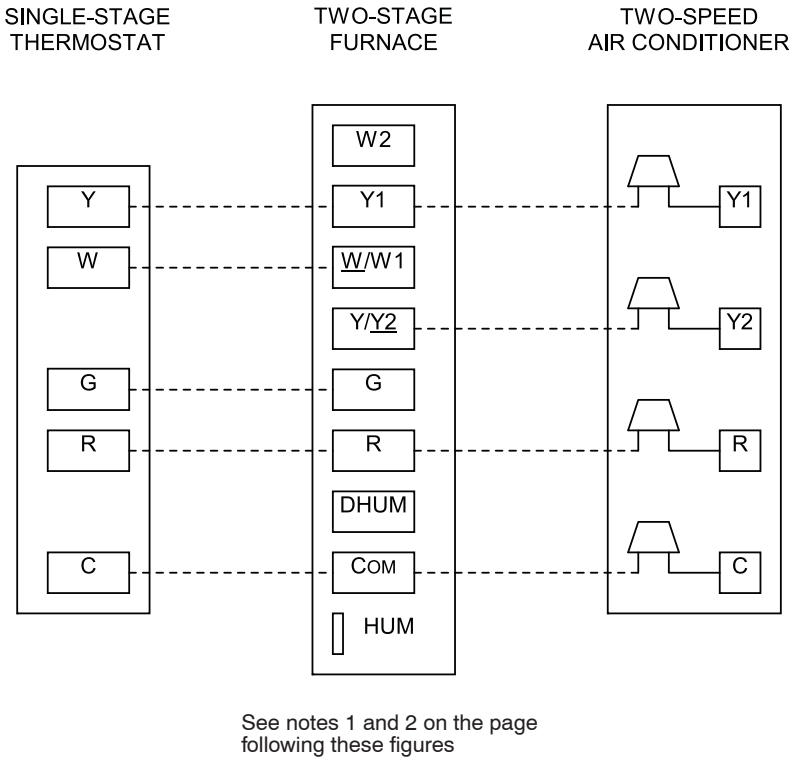

Fig. 34 - Single-Stage Thermostat with Two-Stage Furnace and Two-Speed Air Conditioner

NOTES FOR FIGURES 27 - 34

1. Heat pump MUST have a high pressure switch for dual fuel applications.
2. Refer to outdoor equipment Installation Instructions for additional information and setup procedure.
3. If the heat pump date code is 1501E or earlier, select the “ZONE” position on the two-speed heat pump control. Heat pumps having date codes 1601E and later do not have or require a “ZONE” selection.
4. Outdoor Air Temperature Sensor must be attached in all dual fuel applications.
5. Does not apply for this model.
6. Does not apply for this model.
7. Does not apply for this model.
8. Does not apply for this model.
9. Does not apply for this model.
10. Does not apply for this model.
11. Optional connection: If wire is connected, dip switch SW1-2 on furnace control should be set in ON position to allow thermostat to control furnace staging.
12. Optional connection: If wire is connected, ACRDJ jumper on furnace control should be removed to allow thermostat to control outdoor unit staging.
13. Furnace must control its own high-stage heating operation via furnace control algorithm.
14. The RVS Sensing terminal “L” should not be connected. This is internally used to sense defrost operation.
15. DO NOT SELECT the “FURNACE INTERFACE” or “BALANCE POINT” option on the two-speed heat pump control board. This is controlled internally by the Dual Fuel Thermostat.
16. Dip switch D on Dual Fuel Thermostat should be set in OFF position for single-speed compressor operation. This is factory default.
17. Dip switch D on Dual Fuel Thermostat should be set in ON position for two-speed compressor operation.

CHIMNEY INSPECTION CHART

For additional requirements refer to the National Fuel Gas Code NFPA 54/ANSI Z223.1 and ANSI/NFPA 211 Chimneys, Fireplaces, Vents, and Solid Fuel Burning Appliances

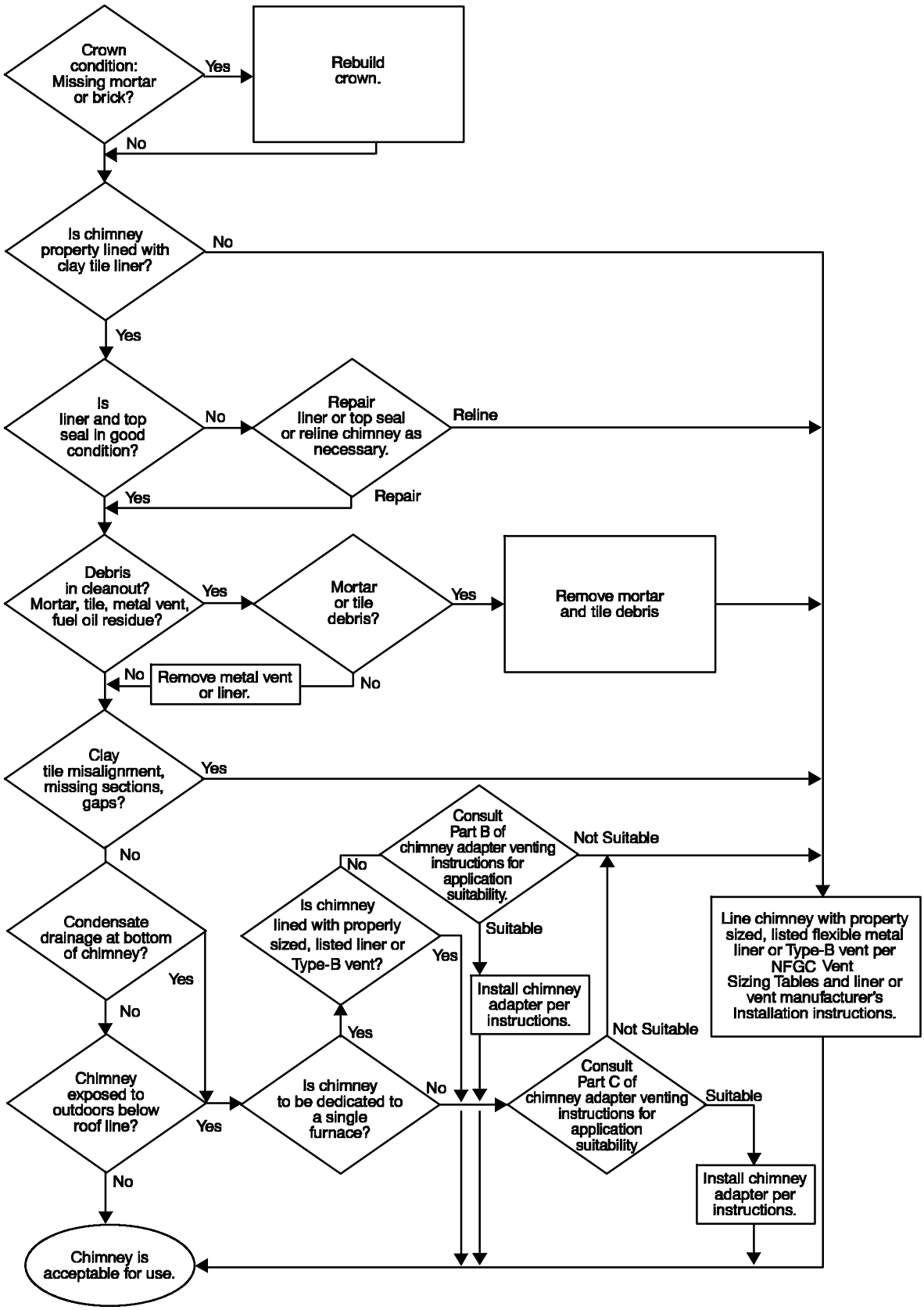

A10133

Fig. 35 - Chimney Inspection Chart

Masonry Chimney Requirement

NOTE: These furnaces are CSA design-certified for use in exterior tile-lined masonry chimneys with a factory accessory Chimney Adapter Kit. Refer to the furnace rating plate for correct kit usage. The Chimney Adapter Kits are for use with ONLY furnaces having a Chimney Adapter Kit number marked on the furnace rating plate.

If a clay tile-lined masonry chimney is being used and it is exposed to the outdoors below the roof line, relining might be required. Chimneys shall conform to the Standard for Chimneys, Fireplaces, Vents, and Solid Fuel Burning Appliances ANSI/NFPA 211-2009 in the United States and must be in good condition.

U.S.A.-Refer to Sections 13.1.8 and 13.2.20 of the NFPA 54/ANSI Z223.1-2009 or the authority having jurisdiction to determine whether relining is required. If relining is required, use a properly sized listed metal liner, Type-B vent, or a listed alternative venting design.

NOTE: See the NFPA 54/ANSI Z223.1-2009 13.1.9 and 13.2.20 regarding alternative venting design and the exception, which cover installations such as our Chimney Adapter Kits which are listed for use with these furnaces. See Table 15 for accessory listing.

The Chimney Adapter Kit is a listed alternative venting system for these furnaces. See the kit instructions for complete details.

This furnace is permitted to be vented into a clay tile-lined masonry chimney that is exposed to the outdoors below the roof line, provided:

1. Vent connector is Type-B double-wall, and
2. This furnace is common vented with at least 1 draft hood equipped appliance, and
3. The combined appliance input rating is less than the maximum capacity given in Table 7, and
4. The input rating of each space heating appliance is greater than the minimum input rating given in Table 8 for the local 99% Winter Design Temperature. Chimneys having internal areas greater than 38 sq. in. (24516 sq. mm) require furnace input ratings greater than the input ratings of these furnaces. See footnote at bottom of Table 8, and
5. The authority having jurisdiction approves.

If all of these conditions cannot be met, an alternative venting design shall be used, such as the listed chimney adapter kit with a furnace listed for use with the kit, a listed chimney-lining system, or a Type-B common vent.

Inspections before the sale and at the time of installation will determine the acceptability of the chimney or the need for repair and/or (re)lining. Refer to the Fig. 33 to perform a chimney inspection. If the inspection of a previously used tile-lined chimney:

a. Shows signs of vent gas condensation, the chimney should be relined in accordance with local codes and the authority having jurisdiction. The chimney should be relined with a listed metal liner, Type-B vent, or a listed chimney adapter kit shall be used to reduce condensation. If a condensate drain is required by local code, refer to the NFPA 54/ANSI Z223.1-2009, Section 12.10 for additional information on condensate drains.

b. Indicates the chimney exceeds the maximum permissible size in the tables, the chimney should be rebuilt or relined to conform to the requirements of the equipment being installed and the authority having jurisdiction.

A chimney without a clay tile liner, which is otherwise in good condition, shall be rebuilt to conform to ANSI/NFPA 211 or be lined with a UL listed metal liner or UL listed Type-B vent. Relining with a listed metal liner or Type-B vent is considered to be a vent-in-a-chase.

If a metal liner or Type-B vent is used to line a chimney, no other appliance shall be vented into the annular space between the chimney and the metal liner.

Exterior Masonry Chimney FAN + NAT Installations with Type-B Double-Wall Vent Connectors ©NFPA & AGA

Table 7 – Combined Appliance Maximum Input Rating in Thousands of Btuh per Hour

VENT HEIGHT FT (M)	INTERNAL AREA OF CHIMNEY SQ. IN. (SQ. MM)			
	12 (7741)	19 (12258)	28 (18064)	38 (24516)
6 (1.8)	74	119	178	257
8 (2.4)	80	130	193	279
10 (3.0)	84	138	207	299
15 (4.5)	NR	152	233	334
20 (6.0)	NR	NR	250	368
30 (9.1)	NR	NR	NR	404

Appliance Application Requirements

Appliance operation has a significant impact on the performance of the venting system. If the appliances are sized, installed, adjusted, and operated properly, the venting system and/or the appliances should not suffer from condensation and corrosion. The venting system and all appliances shall be installed in accordance with applicable listings, standards, and codes.

The furnace should be sized to provide 100 percent of the design heating load requirement plus any margin that occurs because of furnace model size capacity increments. Heating load estimates can be made using approved methods available from Air Conditioning Contractors of America (Manual J); American Society of Heating, Refrigerating, and Air-Conditioning Engineers; or other approved engineering methods. Excessive oversizing of the furnace could cause the furnace and/or vent to fail prematurely.

When a metal vent or metal liner is used, the vent must be in good condition and be installed in accordance with the vent manufacturer's instructions.

To prevent condensation in the furnace and vent system, the following precautions must be observed:

1. The return-air temperature must be at least 60°F db except for brief periods of time during warm-up from setback at no lower than 55°F (13°C) db or during initial start-up from a standby condition.
2. Adjust the gas input rate per the installation instructions. Low gas input rate causes low vent gas temperatures, causing condensation and corrosion in the furnace and/or venting system. Derating is permitted only for altitudes above 2000 Ft. (610 M).
3. Adjust the air temperature rise to the midpoint of the rise range or slightly above. Low air temperature rise can cause low vent gas temperature and potential for condensation problems.
4. Set the thermostat heat anticipator or cycle rate to reduce short cycling.

⚠ CAUTION

BURN HAZARD

Failure to follow this caution may result in personal injury.

Hot vent pipe is within reach of small children when installed in downflow position.

See the following instruction.

Table 8 – Minimum Allowable Input Rating of Space-Heating Appliance in Thousands of Btuh per Hour

VENT HEIGHT FT. (M)	INTERNAL AREA OF CHIMNEY SQ. IN. (SQ. MM)			
	12 (7741)	19 (12258)	28 18064)	38 (24516)
Local 99% Winter Design Temperature: 17 to 26 degrees F				
6	0	55	99	141
8	52	74	111	154
10	NR	90	125	169
15	NR	NR	167	212
20	NR	NR	212	258
30	NR	NR	NR	362
Local 99% Winter Design Temperature: 5 to 16 degrees F*				
6	NR	78	121	166
8	NR	94	135	182
10	NR	111	149	198
15	NR	NR	193	247
20	NR	NR	NR	293
30	NR	NR	NR	377
Local 99% Winter Design Temperature: –10 to 4 degrees F*				
6	NR	NR	145	196
8	NR	NR	159	213
10	NR	NR	175	231
15	NR	NR	NR	283
20	NR	NR	NR	333
30	NR	NR	NR	NR
Local 99% Winter Design Temperature: –11 degrees F or lower				
Not recommended for any vent configuration.				

*The 99.6% heating (db) temperatures found in the 1997 or 2001 ASHRAE Fundamentals Handbook, Climatic Design Information chapter, Table 1A (United States) and 2A (Canada) or the 2005 ASHRAE Fundamentals handbook, Climatic Design Information chapter, and the CD–ROM included with the 2005 ASHRAE Fundamentals Handbook.

Air for combustion must not be contaminated by halogen compounds which include chlorides, fluorides, bromides, and iodides. These compounds are found in many common home products such as detergent, paint, glue, aerosol spray, bleach, cleaning solvent, salt, and air freshener, and can cause corrosion of furnaces and vents. Avoid using such products in the combustion-air supply. Furnace use during construction of the building could cause the furnace to be exposed to halogen compounds, causing premature failure of the furnace or venting system due to corrosion.

Vent dampers on any appliance connected to the common vent can cause condensation and corrosion in the venting system. Do not use vent dampers on appliances common vented with this furnace.

Additional Venting Requirements

A 4-in. (102 mm) round vent elbow is supplied with the furnace. A 5-in. (127 mm) or 6- in. (152 mm) vent connector may be required for some model furnaces. A field-supplied 4-in. (102 mm) to 5-in. (127 mm) or 4-in. (102 mm) to 6-in. (152 mm) sheet metal increaser fitting is required when 5-in. (127 mm) or 6-in. (152 mm) vent connector is used. See Fig. 36 - 48, Venting Orientation for approved vent configurations.

NOTE: Vent connector length for connector sizing starts at furnace vent elbow. The 4-in. (102 mm) vent elbow is shipped for upflow configuration and may be rotated for other positions. Remove the three screws that secure vent elbow to furnace, rotate furnace vent elbow to position desired, reinstall screws. The factory-supplied vent elbow does NOT count as part of the number of vent connector elbows.

The vent connector can exit the furnace through one of five locations on the casing.

⚠ CAUTION

CUT HAZARD

Failure to follow this caution may result in personal injury.

Sheet metal parts may have sharp edges or burrs. Use care and wear appropriate protective clothing, safety glasses and gloves when handling parts, and servicing furnaces.

1. Attach the single wall vent connector to the furnace vent elbow, and fasten the vent connector to the vent elbow with at least two field-supplied, corrosion-resistant, sheet metal screws located 180° apart.

NOTE: An accessory flue extension is available to extend from the furnace elbow to outside the furnace casing. See Table 15 for accessory listing. If flue extension is used, fasten the flue extension to the vent elbow with at least two field-supplied, corrosion-resistant, sheet metal screws located 180° apart. Fasten the vent connector to the flue extension with at least two field-supplied, corrosion resistant sheet metal screws located 180° apart.

2. Vent the furnace with the appropriate connector as shown in Fig. 36 - 48.
3. Determine the correct location of the knockout to be removed.
4. Use a hammer and screwdriver to strike a sharp blow between the tie points and work the slug back and forth until the slug breaks free.

An accessory Vent Guard Kit is REQUIRED for downflow applications for use where the vent exits through the lower portion of the furnace casing. Refer to the Vent Guard Kit Instructions for complete details. See Table 15 for accessory listing.

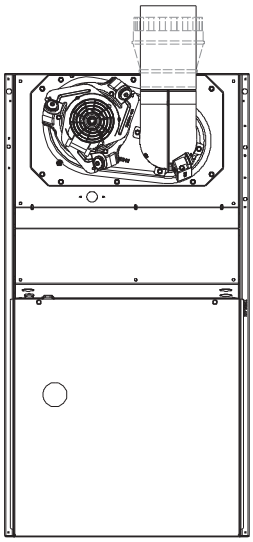

SEE NOTES: 1,2,4,7,8,9
on the page following
these figures

A03208

Fig. 36 - Upflow Application - Vent Elbow Up

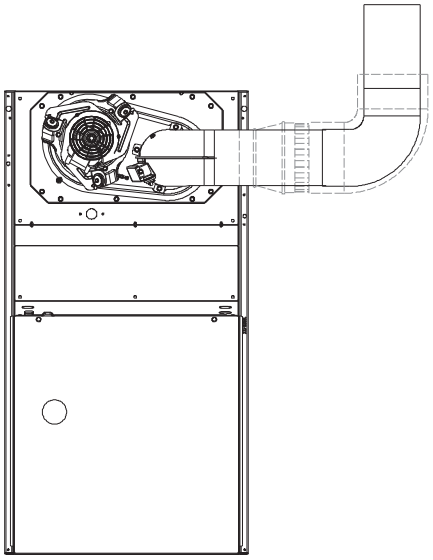

SEE NOTES: 1,2,3,4,7,8,9
on the pages following
these figures

A03209

Fig. 37 - Upflow Application - Vent Elbow Right

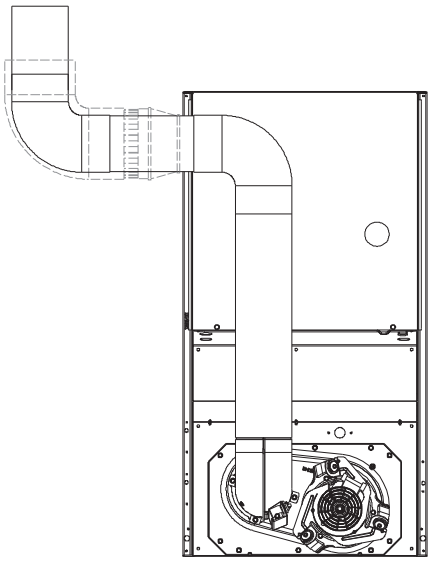

SEE NOTES:1,2,3,4,5,7,8,9
on the page following
these figures

A03210

Fig. 38 - Downflow Application - Vent Elbow Up then Left

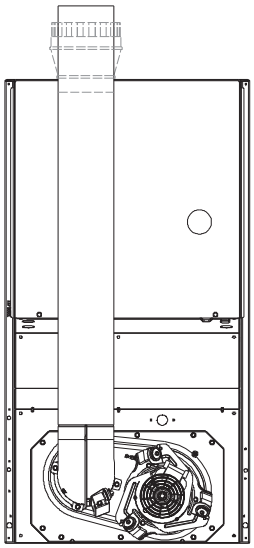

SEE NOTES: 1,2,4,5,7,8,9
on the page following
these figures

A03211

Fig. 39 - Downflow Application - Vent Elbow Up

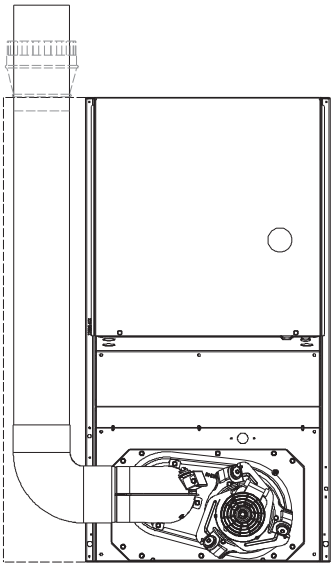

SEE NOTES: 1,2,4,5,6,7,8,9,10
on the page following these figures

A03207

Fig. 40 - Downflow Application - Vent Elbow Left then Up

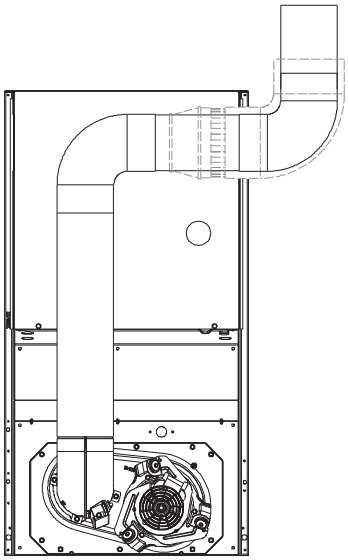

SEE NOTES:1,2,3,4,5,7,8,9
on the page following
these figures.

A03212

Fig. 41 - Downflow Application - Vent Elbow Up then Right

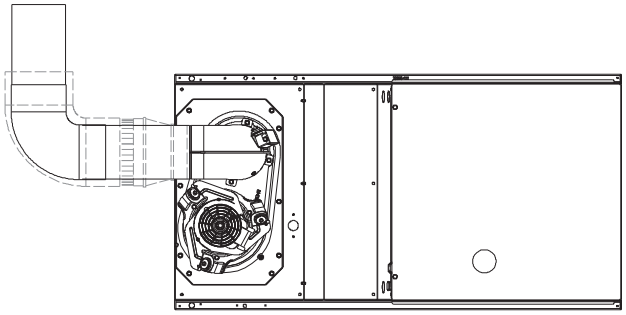

SEE NOTES: 1,2,4,7,8,9 on the page
following these figures

A03213

Fig. 42 - Horizontal Left Application - Vent Elbow Left

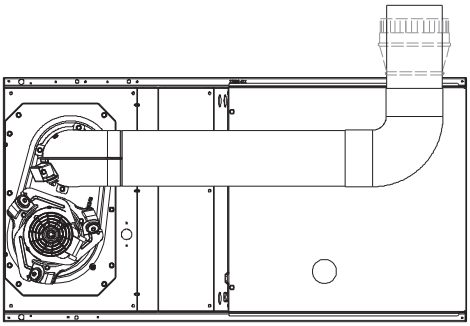

SEE NOTES: 1,2,4,5,7,8,9 on the page
following these figures

A03214

Fig. 43 - Horizontal Left Application - Vent Elbow Right then Up

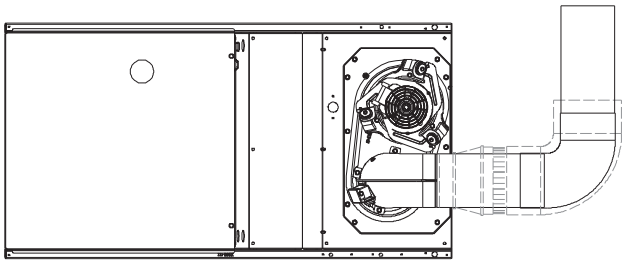

SEE NOTES: 1,2,4,7,8,9 on the page
following these figures

A03218

Fig. 44 - Horizontal Right Application - Vent Elbow Right

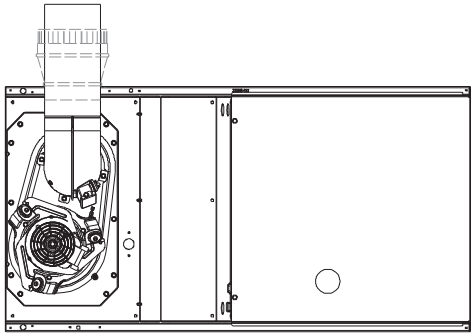

SEE NOTES: 1,2,4,5,7,8,9 on the page following these figures

A03215

Fig. 45 - Horizontal Left Application - Vent Elbow Up

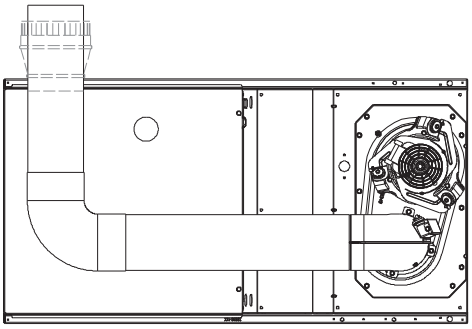

SEE NOTES: 1,2,4,5,7,8,9 on the page following these figures

A03219

Fig. 47 - Horizontal Right Application - Vent Elbow Left then Up

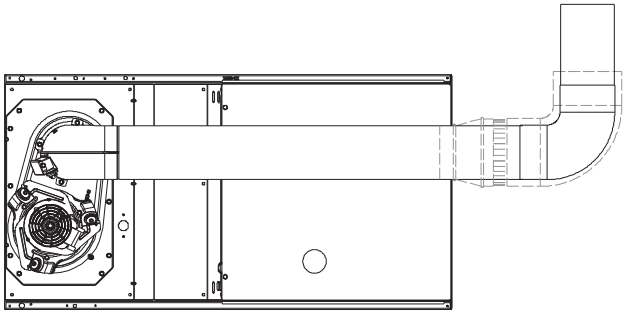

SEE NOTES: 1,2,4,5,7,8,9 on the page following these figures

A03216

Fig. 46 - Horizontal Left Application - Vent Elbow Right

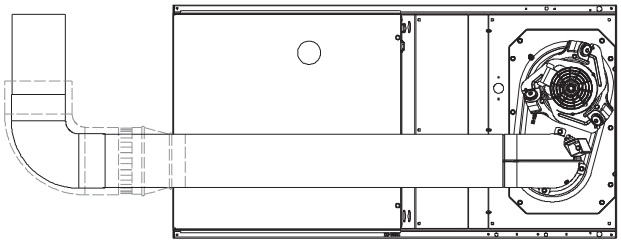

SEE NOTES: 1,2,4,5,7,8,9

A02068

Fig. 48 - Horizontal Right Application-Vent Elbow Left

VENTING NOTES FOR FIG. 36 - 48

1. For common vent, vent connector sizing and vent material: United States--use the NFGC.
2. Immediately increase to 5-in. (102 mm) or 6-in. (152 mm) vent connector outside furnace casing when 5-in. (127 mm) vent connector is required, refer to Note 1 above.
3. Side outlet vent for upflow and downflow installations must use Type B vent immediately after exiting the furnace, except when factory-approved Downflow Vent Guard Kit is used in the downflow position. See Table 15 for accessory listing.
4. Type-B vent where required, refer to Note 1 above.
5. A 4-in.(102 mm) single-wall (26 ga. min.) vent must be used inside furnace casing and when the factory-approved Downflow Vent Guard Kit is used external to the furnace. See Table 15 for accessory listing.
6. Accessory Downflow Vent Guard Kit required in downflow installations with lower vent configuration. See Table 15 for accessory listing.
7. Chimney Adapter Kit may be required for exterior masonry chimney applications. Refer to Chimney Adapter Kit for sizing and complete application details. See Table 15 for accessory listing.
8. Secure vent connector to furnace elbow with (2) corrosion-resistant sheet metal screws, spaced approximately 180° apart.
9. Secure all other single wall vent connector joints with (3) corrosion resistant screws spaced approximately 120° apart. Secure Type-B vent connectors per vent connector manufacturer's recommendations.
10. The total height of the vent and connector shall be at least seven feet for the 154,000 Btuh gas input rate model when installed in a downflow application with furnace elbow turned to left side with the connector elbow outside furnace casing pointing upward. (See Fig. 38.)

Caution!! For the following applications, use the minimum vertical heights as specified below. For all other applications, follow exclusively the National Fuel Gas Code.

FURNACE ORIENTATION	VENT ORIENTATION	FURNACE INPUT (BTUH/HR)	MIN. VENT DIAMETER IN. (mm)*	MIN. VERTICAL VENT HEIGHT FT. (M)**
Downflow	Vent elbow left, then up Fig. 36	154,000 132,000 110,000	5 (127)	12 (3.6)
Horizontal Left	Vent elbow right, then up Fig. 39	154,000 132,000	5 (127)	7 (2.1)
Horizontal Left	Vent Elbow up Fig. 40	154,000 132,000	5 (127)	7 (2.1)
Horizontal Left	Vent elbow right Fig. 41	154,000	5 (127)	7 (2.1)
Downflow	Vent elbow up then left Fig. 34	110,000	5 (127)	10 (3.0)
Downflow	Vent elbow up, then right Fig. 37	110,000	5 (127)	10 (3.0)

NOTE: All vent configurations must also meet National Fuel Gas Code venting requirements NFGC.
*4−in. (102 mm) inside casing or vent guard
**Including 4 in. (102 mm) vent section(s)

The horizontal portion of the venting system shall slope upwards not less than 1/4-in. per linear ft. (21 mm/m) from the furnace to the vent and shall be rigidly supported every 5 ft. (1.5 M) or less with metal hangers or straps to ensure there is no movement after installation.

Sidewall Venting

This furnace is not approved for direct sidewall horizontal venting.

Per section 12.4.3 of the NFPA 54/ANSI Z223.1-2009, any listed mechanical venter may be used, when approved by the authority having jurisdiction.

Select the listed mechanical venter to match the Btuh input of the furnace being vented. Follow all manufacturer's installation requirements for venting and termination included with the listed mechanical venter.

START-UP, ADJUSTMENT, AND SAFETY CHECK

General

⚠ WARNING

FIRE HAZARD

Failure to follow this warning could result in personal injury, death or property damage.

This furnace is equipped with manual reset limit switches in the gas control area. The switches open and shut off power to the gas valve, if a flame rollout or overheating condition occurs in the gas control area. DO NOT bypass the switches. Correct problem before resetting the switches.

1. Maintain 115-v wiring and ground. Improper polarity will result in rapid flashing LED and no furnace operation.
2. Make thermostat wire connections at the 24-v terminal block on the furnace control. Failure to make proper connections will result in improper operation. (See Fig. 25 - 34.)
3. Gas supply pressure to the furnace must be greater than 4.5-In. W.C. (0.16 psig) but not exceed 14-In. W.C. (0.5 psig).
4. Check all manual-reset switches for continuity.
5. Replace blower compartment door. Door must be in place to operate furnace.
6. Setup switch descriptions The variable speed furnace control has DIP switches to select thermostat staging, blower off delay timings, air flow selection and other operational or service related functions. (See Fig. 26, 52, and 54.)

⚠ CAUTION

CUT HAZARD

Failure to follow this caution may result in personal injury.

Sheet metal parts may have sharp edges or burrs. Use care and wear appropriate protective clothing, safety glasses and gloves when handling parts, and servicing furnaces.

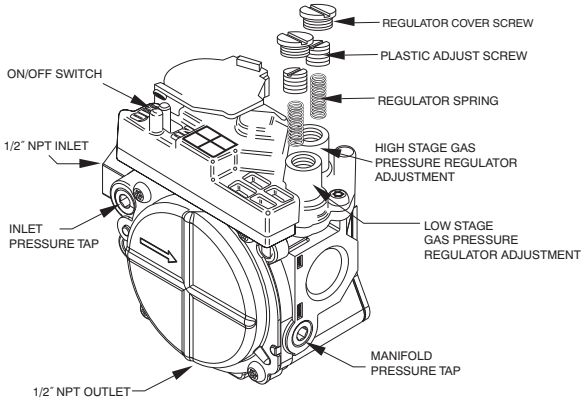

A04167

Fig. 49 - Redundant Automatic Gas Control Valve

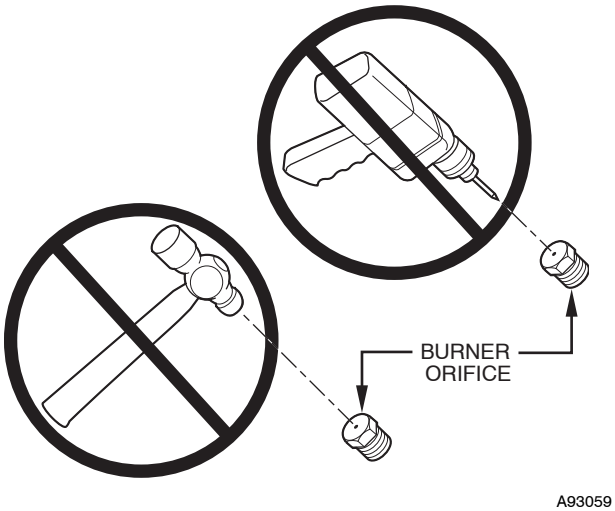

Fig. 50 - Orifice Hole

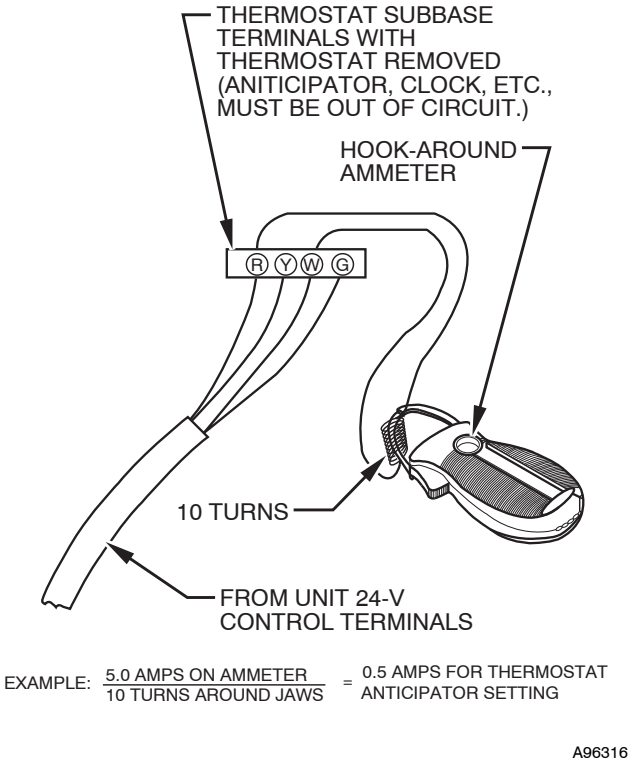

Fig. 51 - Amp. Draw Check with Ammeter

Start-Up Procedures

WARNING

FIRE AND EXPLOSION HAZARD

Failure to follow this warning could cause personal injury, death or property damage.

Never test for gas leaks with an open flame. Use a commercially available soap solution made specifically for detection of leaks to check all connections. A fire or explosion may result causing property damage, personal injury or loss of life.

WARNING

ELECTRICAL SHOCK HAZARD

Failure to follow this warning could result in personal injury, or death.

Blower access door switch opens 115-v power to control. No component operation can occur unless switch is closed. Caution must be taken when manually closing this switch for service purposes.

PG8MVA

1. Purge gas lines after all connections have been made.
2. Check gas lines for leaks.
3. To Begin Component Self-Test:
   Remove Blower Access Door. Disconnect the thermostat R lead from furnace control board. Manually close blower door switch. Turn Setup DIP switch SW1-6 ON. (See Fig. 26, 52 and 54.)

NOTE: The furnace control allows all components, except the gas valve, to be run for short period of time. This feature helps diagnose a system problem in case of a component failure. Component test feature will not operate if any thermostat signal is present at the control.

Refer to service label attached to furnace or See Fig. 53.

Component test sequence is as follows:

a. Inducer motor starts on high-speed and continues to run until Step d. of component test sequence.
b. Hot surface igniter is energized for 15 sec., then off.
c. Blower motor operates for 15 sec.
d. Inducer motor goes to low-speed for 10 sec., then stops.
e. After component test is completed, one or more status codes (11, 25, or 41) will flash. See component test section of service label (Fig. 53) in furnace for explanation of status codes.

NOTE: To repeat component test, turn setup switch SW1-6 OFF, then back ON.

4. Turn setup DIP switch SW1-6 OFF. Reconnect R lead to furnace control board, release blower door switch and re-install blower access door.
5. Operate furnace per instruction on inner door.
6. Verify furnace shut down by lowering thermostat setting below room temperature.
7. Verify furnace restarts by raising thermostat setting above room temperature.

	Furnace Setup Switch Description			
	SETUP SWITCH	**SWITCH NAME**	**NORMAL POSITION**	**DESCRIPTION OF USE**
SW1	SW1-1	Status Code Recovery	OFF	Turn ON to retrieve up to 7 stored status codes for troubleshooting assistance when R thermostat lead is disconnected.
	SW1-2	Low Heat Only (Adaptive Heat Mode when SW1-2 is OFF)	OFF	When SW1-2 is OFF allows low heat operation with a single stage thermostat. Turn ON when using two-stage thermostat to allow Low Heat operation when R to W/W1 closes and High Heat operation when R to W/W1 and W2 close.
	SW1-3	Low Heat Rise Adjustment	OFF	Turn ON to increase Low Heat airflow by 18 percent. This compensates for increased return air temperature caused with bypass humidifier. This also increases the low heat inducer speed 15 percent.
	SW1-4	Comfort/Efficiency Adjustment	ON	Turn ON to decrease low heat airflow by 7 percent, and high heat airflow 10 percent for maximum comfort.
	SW1-5	CFM per ton adjust	OFF	Turn ON for 400 CFM per ton, Turn OFF for 350 CFM per ton. See also SW4.
	SW1-6	Component Self Test	OFF	Turn ON to initiate Component Self Test for troubleshooting assistance when R thermostat lead is disconnected. Turn OFF when Self Test is completed.
	SW1-7 & SW1-8	Blower OFF delay	ON or OFF	Blower Off Delay time – adjustable 90 seconds to 180 seconds. See table in Adjustments section or refer to unit wiring diagram.
SW4	SW4-3	CFM per ton Adjust	OFF	Allows additional CFM per ton selections when used with SW 1-5 325 CFM per ton (nominal) when SW 4-3 ON and SW 1-5 OFF 350 CFM per ton (nominal) when SW 4-3 OFF and SW 1-5 OFF 370 CFM per ton (nominal) when SW4-3 ON and SW 1-5 ON 400 CFM per ton (nominal) when SW 1-5 ON and SW 4-3 OFF See Air Delivery Tables for model specific CFM vs. static pressure

AIR CONDITIONING (A/C) SETUP SWITCHES	
SW2 AC	SW 2, AC (Cooling Airflow) SETUP SWITCHES The AC setup switch selects desired cooling or high stage cooling (two stage units) airflow. See Cooling Air Delivery Tables for specific switch settings.
CONTINUOUS FAN (CF) SETUP SWITCHES	
SW3 CF	SW 3, CF (Continuous Fan) SETUP SWITCHES The CF setup switch selects desired Continuous Fan Airflow The CF switch position is the low cooling airflow selection for two stage cooling units. The CFM values are shown in the Air Delivery Tables below for SW 3 settings. SW 3 cannot be set for airflow higher than SW 2. See Continuous Fan Air Flow Table for specific switch settings.

A12092

Fig. 52 - Furnace Setup Switch Description

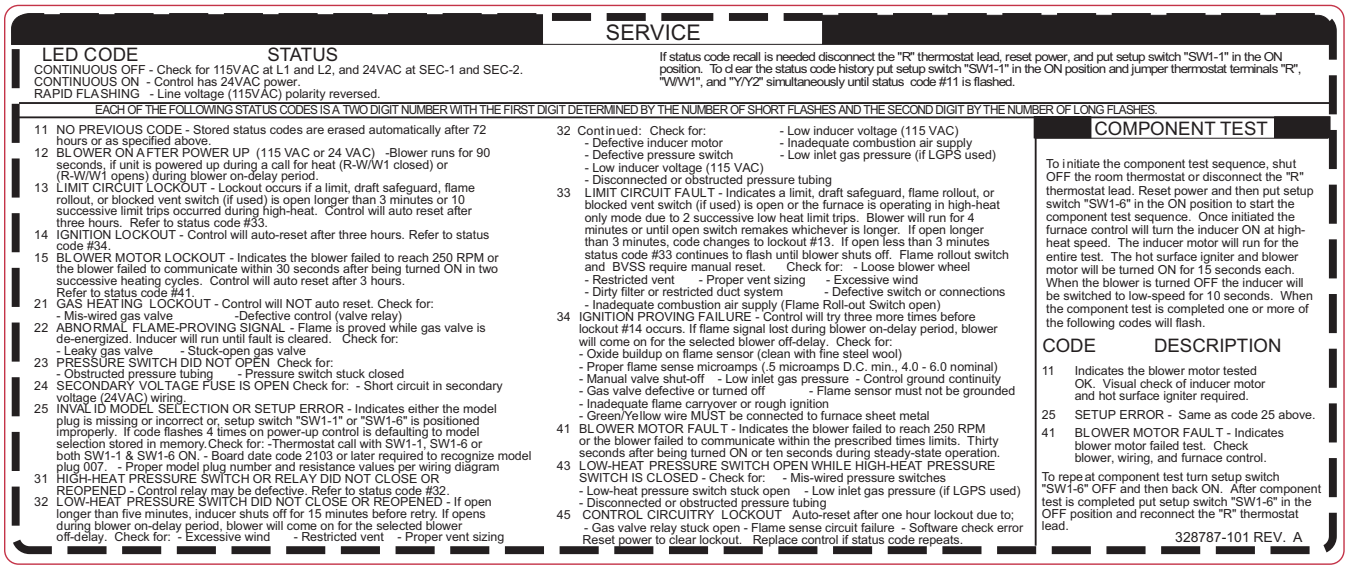

SERVICE

LED CODE STATUS
CONTINUOUS OFF - Check for 115VAC at L1 and L2, and 24VAC at SEC-1 and SEC-2.
CONTINUOUS ON - Control has 24VAC power.
RAPID FLASHING - Line voltage (115VAC) polarity reversed.

If status code recall is needed disconnect the "R" thermostat lead, reset power, and put setup switch "SW1-1" in the ON position. To clear the status code history put setup switch "SW1-1" in the ON position and jumper thermostat terminals "R", "W/W1", and "Y/Y2" simultaneously until status code #11 is flashed.

EACH OF THE FOLLOWING STATUS CODES IS A TWO DIGIT NUMBER WITH THE FIRST DIGIT DETERMINED BY THE NUMBER OF SHORT FLASHES AND THE SECOND DIGIT BY THE NUMBER OF LONG FLASHES.

11 NO PREVIOUS CODE - Stored status codes are erased automatically after 72 hours or as specified above.
12 BLOWER ON AFTER POWER UP (115 VAC or 24 VAC) -Blower runs for 90 seconds, if unit is powered up during a call for heat (R-W/W1 closed) or (R-W/W1 opens) during blower on-delay period.
13 LIMIT CIRCUIT LOCKOUT - Lockout occurs if a limit, draft safeguard, flame rollout, or blocked vent switch (if used) is open longer than 3 minutes or 10 successive limit trips occurred during high-heat. Control will auto reset after three hours. Refer to status code #33.
14 IGNITION LOCKOUT - Control will auto-reset after three hours. Refer to status code #34.
15 BLOWER MOTOR LOCKOUT - Indicates the blower failed to reach 250 RPM or the blower failed to communicate within 30 seconds after being turned ON in two successive heating cycles. Control will auto reset after 3 hours. Refer to status code #41.
21 GAS HEATING LOCKOUT - Control will NOT auto reset. Check for:
- Mis-wired gas valve -Defective control (valve relay)
22 ABNORMAL FLAME-PROVING SIGNAL - Flame is proved while gas valve is de-energized. Inducer will run until fault is cleared. Check for:
- Leaky gas valve - Stuck-open gas valve
23 PRESSURE SWITCH DID NOT OPEN Check for:
- Obstructed pressure tubing - Pressure switch stuck closed
24 SECONDARY VOLTAGE FUSE IS OPEN Check for: - Short circuit in secondary voltage (24VAC) wiring
25 INVALID MODEL SELECTION OR SETUP ERROR - Indicates either the model plug is missing or incorrect or, setup switch "SW1-1" or "SW1-6" is positioned improperly. If code flashes 4 times on power-up control is defaulting to model selection stored in memory.Check for: -Thermostat call with SW1-1, SW1-6 or both SW1-1 & SW1-6 ON. - Board date code 2103 or later required to recognize model plug 007. - Proper model plug number and resistance values per wiring diagram
31 HIGH-HEAT PRESSURE SWITCH OR RELAY DID NOT CLOSE OR REOPENED - Control relay may be defective. Refer to status code #32.
32 LOW-HEAT PRESSURE SWITCH DID NOT CLOSE OR REOPENED - If open longer than five minutes, inducer shuts off for 15 minutes before retry. If opens during blower on-delay period, blower will come on for the selected blower off-delay. Check for: - Excessive wind - Restricted vent - Proper vent sizing
32 Continued: Check for: - Low inducer voltage (115 VAC)
- Defective inducer motor - Inadequate combustion air supply
- Defective pressure switch - Low inlet gas pressure (if LGPS used)
- Low inducer voltage (115 VAC)
- Disconnected or obstructed pressure tubing
33 LIMIT CIRCUIT FAULT - Indicates a limit, draft safeguard, flame rollout, or blocked vent switch (if used) is open or the furnace is operating in high-heat only mode due to 2 successive low heat limit trips. Blower will run for 4 minutes or until open switch remakes whichever is longer. If open longer than 3 minutes, code changes to lockout #13. If open less than 3 minutes status code #33 continues to flash until blower shuts off. Flame rollout switch and BVSS require manual reset. Check for: - Loose blower wheel
- Restricted vent - Proper vent sizing - Excessive wind
- Dirty filter or restricted duct system - Defective switch or connections
- Inadequate combustion air supply (Flame Roll-out Switch open)
34 IGNITION PROVING FAILURE - Control will try three more times before lockout #14 occurs. If flame signal lost during blower on-delay period, blower will come on for the selected blower off-delay. Check for:
- Oxide buildup on flame sensor (clean with fine steel wool)
- Proper flame sense microamps (.5 microamps D.C. min., 4.0 - 6.0 nominal)
- Manual valve shut-off - Low inlet gas pressure - Control ground continuity
- Gas valve defective or turned off - Flame sensor must not be grounded
- Inadequate flame carryover or rough ignition
- Green/Yellow wire MUST be connected to furnace sheet metal
41 BLOWER MOTOR FAULT - Indicates the blower failed to reach 250 RPM or the blower failed to communicate within the prescribed times limits. Thirty seconds after being turned ON or ten seconds during steady-state operation.
43 LOW-HEAT PRESSURE SWITCH OPEN WHILE HIGH-HEAT PRESSURE SWITCH IS CLOSED - Check for: - Mis-wired pressure switches
- Low-heat pressure switch stuck open - Low inlet gas pressure (if LGPS used)
- Disconnected or obstructed pressure tubing
45 CONTROL CIRCUITRY LOCKOUT Auto-reset after one hour lockout due to;
- Gas valve relay stuck open - Flame sense circuit failure - Software check error
Reset power to clear lockout. Replace control if status code repeats.

COMPONENT TEST

To initiate the component test sequence, shut OFF the room thermostat or disconnect the "R" thermostat lead. Reset power and then put setup switch "SW1-6" in the ON position to start the component test sequence. Once initiated the furnace control will turn the inducer ON at high-heat speed. The inducer motor will run for the entire test. The hot surface igniter and blower motor will be turned ON for 15 seconds each. When the blower is turned OFF the inducer will be switched to low-speed for 10 seconds. When the component test is completed one or more of the following codes will flash.

CODE DESCRIPTION
11 Indicates the blower motor tested OK. Visual check of inducer motor and hot surface igniter required.
25 SETUP ERROR - Same as code 25 above.
41 BLOWER MOTOR FAULT - Indicates blower motor failed test. Check blower, wiring, and furnace control.

To repeat component test turn setup switch "SW1-6" OFF and then back ON. After component test is completed put setup switch "SW1-6" in the OFF position and reconnect the "R" thermostat lead.

328787-101 REV. A

A04015

Fig. 53 - Service Label

PG8MVA

Adjustments

WARNING

FIRE HAZARD

Failure to follow this warning could result in personal injury, death and/or property damage.

DO NOT bottom out gas valve regulator adjusting screw. This can result in unregulated manifold pressure and result in excess overfire and heat exchanger failures.

CAUTION

FURNACE DAMAGE HAZARD

Failure to follow this caution may result in reduced furnace life.

DO NOT redrill orifices. Improper drilling (burrs, out-of-round holes, etc.) can cause excessive burner noise and misdirection of burner flames. This can result in flame impingement of heat exchangers, causing failures. (See Fig. 50.)

Furnace gas input rate on rating plate is for installations at altitudes up to 2000 Ft. (610 M). Furnace input rate must be within +/-2 percent of furnace rating plate input. For altitudes above 5500 Ft. (1676 M), a field-supplied high altitude pressure switch is required.

1. Determine the correct gas input rate.
   The input rating for altitudes above 2,000 ft. (610 M) must be reduced by 4 percent for each 1,000 ft. (305 M) above sea level.
   For installations below 2000 Ft. (610 M), refer to the unit rating plate. For installations above 2000 Ft. (610 M), multiply the input on the rating plate by the de-rate multiplier in Table 9 for the correct input rate.
2. Determine the correct orifice and manifold pressure adjustment. All models in all positions except Low NOx models in downflow and horizontal positions use Table 12 (22,000 Btuh per burner.) Low NOx models in downflow or horizontal positions must use Table 13 (21,000 Btuh per burner.) See input listed on rating plate.
   a. Obtain average yearly gas heat value (at installed altitude) from local gas supplier.
   b. Obtain average yearly gas specific gravity from local gas supplier.
   c. Find installation altitude in Table 12 or 13.
   d. Find closest natural gas heat value and specific gravity in Table 12 or 13.
   e. Follow heat value and specific gravity lines to point of intersection to find orifice size and low-and high-heat manifold pressure settings for proper operation.
   f. Check and verify burner orifice size in furnace. NEVER ASSUME ORIFICE SIZE. ALWAYS CHECK AND VERIFY.

NOTE: If orifice hole appears damaged or it is suspected to have been redrilled, check orifice hole with a numbered drill bit of correct size. Never redrill an orifice. A burr-free and squarely aligned orifice hole is essential for proper flame characteristics.

   g. Replace orifice with correct size, if required by Table 12 or 13. Use only factory-supplied orifices. See EXAMPLE 1.

Table 9 – Altitude Derate Multiplier for U.S.A.

ALTITUDE FT. (M)	PERCENT OF DERATE	DERATE MULTIPLIER FACTOR*
0–2000 (0–610)	0	1.00
2001–3000 (610–914)	8–12	0.90
3001–4000 (914–1219)	12–16	0.86
4001–5000 (1219–1524)	16–20	0.82
5001–6000 1524–1829)	20–24	0.78
6001–7000 (1829–2134)	24–28	0.74
7001–8000 (2134–2438)	28–32	0.70
8001–9000 (2438–2743)	32–36	0.66
9001–10,000 (2743–3048)	36–40	0.62

Table 10 – Blower Off Delay Setup Switch

DESIRED HEATING MODE BLOWER OFF DELAY (SEC.)	SETUP SWITCH (SW–7 AND –8) POSITION	
	SW1–7	SW1–8
90	OFF	OFF
120	ON	OFF
150	OFF	ON
180	ON	ON

EXAMPLE 1: 0–2000 ft. (0-610 M) altitude
For 22,000 Btuh per burner application use Table 12.
Heating value = 1000 Btuh/cu ft.
Specific gravity = 0.62
Therefore: Orifice No. 43*
Manifold pressure: 3.7-In. W.C. for high-heat
1.6-In. W.C. for low-heat
* Furnace is shipped with No. 43 orifices. In this example all main burner orifices are the correct size and do not need to be changed to obtain proper input rate.

PG8MVA

3. Adjust manifold pressure to obtain low fire input rate. (See Fig. 49.)
   a. Turn gas valve ON/OFF switch to OFF.
   b. Remove manifold pressure tap plug from gas valve.
   c. Connect a water column manometer or similar device to manifold pressure tap.
   d. Turn gas valve ON/OFF switch to ON.
   e. Move setup SW1—2 on furnace control to ON position to lock furnace in low-heat operation. (See Fig. 24 and 52 .)
   f. Manually close blower door switch.
   g. Jumper R and W/W1 thermostat connections on control to start furnace. (See Fig. 24.)
   h. Remove regulator adjustment cap from low heat gas valve pressure regulator (See Fig. 49.) and turn low-heat adjusting screw (3/16 or smaller flat-tipped screwdriver) counterclockwise (out) to decrease input rate or clockwise (in) to increase input rate.

NOTE: DO NOT set low-heat manifold pressure less than 1.4-In. W.C. or more than 1.7-In. W.C. for natural gas. If manifold pressure is outside this range, change main burner orifices.

   i. Install low-heat regulator adjustment cap.
   j. Move setup switch SW1-2 to off position after completing low-heat adjustment.
   k. Leave manometer or similar device connected and proceed to Step 4.
4. Adjust manifold pressure to obtain high fire input rate. (See Fig. 49.)
   a. Jumper R to W/W1 and W2 thermostat connections on furnace control. This keeps furnace locked in high-heat operation.
   b. Remove regulator adjustment cap from high-heat gas valve pressure regulator (See Fig. 49) and turn high heat adjusting screw (3/16-in. or smaller flat-tipped screwdriver) counterclockwise (out) to decrease input rate or clockwise (in) to increase input rate.

NOTE: DO NOT set high-heat manifold pressure less than 3.2-In. W.C. or more than 3.8 In. W.C. for natural gas. If manifold pressure is outside this range, change main burner orifices to obtain manifold pressure in this range.

   c. When correct input is obtained, replace caps that conceal gas valve regulator adjustment screws. Main burner flame should be clear blue, almost transparent (See Fig. 56.)
   d. Remove jumpers R to W/W1 and R to W2.
5. Verify natural gas input rate by clocking meter.

NOTE: Gas valve regulator adjustment caps must be in place for proper input to be clocked.

   a. Turn off all other gas appliances and pilots served by the meter.
   b. Move setup switch SW1-2 to ON position. This keeps furnace locked in low-heat operation.
   c. Jumper R to W/W1.
   d. Run furnace for 3 minutes in low-heat operation.
   e. Measure time (in sec) for gas meter to complete 1 revolution and note reading. The 2 or 5 cubic feet dial provides a more accurate measurement of gas flow.
   f. Refer to Table 11 for cubic ft. of gas per hr.
   g. Multiply gas rate cu ft./hr by heating value (Btuh/cu ft.) to obtain input. If clocked rate does not match required input from Step 1, increase manifold pressure to increase input or decrease manifold pressure to decrease input. Repeat steps b through e until correct low-heat input is achieved. Re-install low heat regulator seal cap on gas valve.
   h. Move setup switch SW1-2 to OFF position and jumper R to W/W1, and W2. This keeps furnace locked in high-heat operation. Repeat items d through g for high-heat operation.
6. Set Temperature Rise

NOTE: Blower access door must be installed when taking temperature rise reading. Leaving blower access door off will result in incorrect temperature measurements.

⚠ CAUTION

FURNACE DAMAGE HAZARD

Failure to follow this caution may result in shorten furnace life.

Set air temperature rise within limits specified on the rating plate to prevent reduced life of furnace components. Operation is within a few degrees of the mid-point of rise range when setup switch SW1-4 is OFF.

⚠ CAUTION

UNIT DAMAGE HAZARD

Failure to follow this caution may result in overheating the heat exchangers or condensing flue gases in heat exchanger areas not designed for condensate.

Temperature rise must be within limits specified on unit rating plate. Operation is within a few degrees of midpoint of rise range when setup switch SW1-4 is OFF.

When setup switch SW1-4 is ON, operation will be near the high end of the rise range for improved comfort.

Furnace must operate within ranges of temperature rise specified on the furnace rating plate. Determine air temperature rise as follows:

   a. Place thermometers in return and supply ducts as near furnace as possible. Be sure thermometers do not see heat exchanger so that radiant heat does not affect readings. This practice is particularly important with straight-run ducts.

b. When thermometer readings stabilize, subtract return-air temperature from supply-air temperature to determine air temperature rise.

NOTE: Temperature rise can be determined for low-heat operation by placing setup switch SW1-2 on furnace control in ON position. For high-heat operation, place setup switch SW1-2 in OFF position and jumper R-W2 on furnace control. DO NOT forget to return setup switch to OFF position and remove R-W2 jumper upon completion of testing.

c. This furnace is capable of automatically providing proper airflow to maintain the temperature rise within the range specified on furnace rating plate. If temperature rise is outside this range, proceed as follows:
   (1.) Check gas input for low- and high-heat operation.
   (2.) Check derate for altitude if applicable.
   (3.) Check all return and supply ducts for excessive restrictions causing static pressure greater than 0.5-In. W.C..
   (4.) Ensure Low Heat Rise Adjust switch SW1-3 on furnace control is in ON position when a bypass humidifier is used. (See Fig. 26 for switch location.)
   (5.) Make sure proper model plug is installed.

d. Remove thermostat jumpers and release blower access door switch.

e. Repeat Steps a through c as required to adjust for high heat temperature rise.

f. When correct high heat input rate and temperature rise is achieved, turn gas valve ON/OFF switch to OFF.

g. Release blower access door switch.

h. Remove manometer or similar device from gas valve.

i. Re-install manifold pressure tap plug in gas valve. (See Fig. 49.)

⚠ WARNING

FIRE HAZARD

Failure to follow this warning could result in personal injury, death, and/or property damage.

Reinstall manifold pressure tap plug in gas valve to prevent gas leak.

j. Remove thermostat jumper wire from furnace control board.

k. Turn gas valve ON/OFF switch to ON.

⚠ CAUTION

FURNACE OVERHEATING HAZARD

Failure to follow this caution may result in reduced furnace life.

Recheck temperature rise. It must be within limits specified on the rating plate. Recommended operation is at the mid-point of rise range or slightly above.

l. Proceed to Step 6, "Set Blower Off Delay" before installing blower access door.

7. Set Blower Off Delay
   a. Remove blower access door if installed.
   b. Turn Dip switch SW-7 or SW-8 ON or OFF for desired blower off delay. (See Fig. 26, 52 and 54.)

8. Set thermostat heat anticipator.
   a. Mechanical thermostat. Set thermostat heat anticipator to match the amp. draw of the electrical components in the R-W/W1 circuit. Accurate amp. draw readings can be obtained at the wires normally connected to thermostat subbase terminals, R and W. The thermostat anticipator should NOT be in the circuit while measuring current.
      (1.) Set SW1-2 switch on furnace control board to ON.
      (2.) Remove thermostat from subbase or from wall.
      (3.) Connect an amp. meter as shown in Fig. 51. across the R and W subbase terminals or R and W wires at wall.
      (4.) Record amp. draw across terminals when furnace is in low heat and after blower starts.
      (5.) Set heat anticipator on thermostat per thermostat instructions and install on subbase or wall.
      (6.) Turn SW1-2 switch OFF.
      (7.) Install blower access door.
   b. Electronic thermostat: Set cycle rate for 3 cycles per hr.

9. Set Airflow for Air Conditioning -Single Stage and High Stage Cooling
   The ECM blower can be adjusted for a range of airflow for Low Speed or High Speed cooling. See Table 4-Air Delivery - CFM (With Filter). Depending on the model size, the cooling airflow can be adjusted from 1. tons nominal cooling to 3 ., to 4 or to 6 tons of nominal cooling based on 350 cfm ton.
   The cooling airflow is adjusted by turning Setup switches SW2-1, SW2-2 and SW2-3 either ON or OFF. Select the required airflow from Fig. 58. Fig. 58 is based on 350 CFM per ton. For airflow at 400 CFM per ton, turn Setup SW1-5 ON (See Fig. 26 and 52.)

NOTE: 6 ton airflow will truncate at 2200 cfm on applicable models. For a complete explanation of cooling airflow, refer to the section titled "Sequence of Operation."

10. Set Airflow For Continuous Fan/Low Speed Cooling Airflow The ECM blower motor can be adjusted for continuous fan speeds different than heating or cooling fan speed. See Table 4 - Air Delivery - CFM (With Filter). Select the required continuous fan airflow from Fig. 58.
    The continuous fan speed is also the fan speed for low speed cooling when furnace is used with a 2-speed cooling unit. Adjust the Continuous Fan CFM to match the airflow required for low speed cooling. Select the required airflow from Fig. 56. For airflow at 400 CFM per ton, turn Setup SW1-5 ON (See Fig. 58.) The airflow selected for low speed cooling will also be the airflow used for continuous fan.
    The continuous fan speed can be further adjusted at the thermostat using the "Comfort Fan" select function. Changing the continuous fan speed at the thermostat DOES NOT change the low speed cooling airflow selected at the control board.

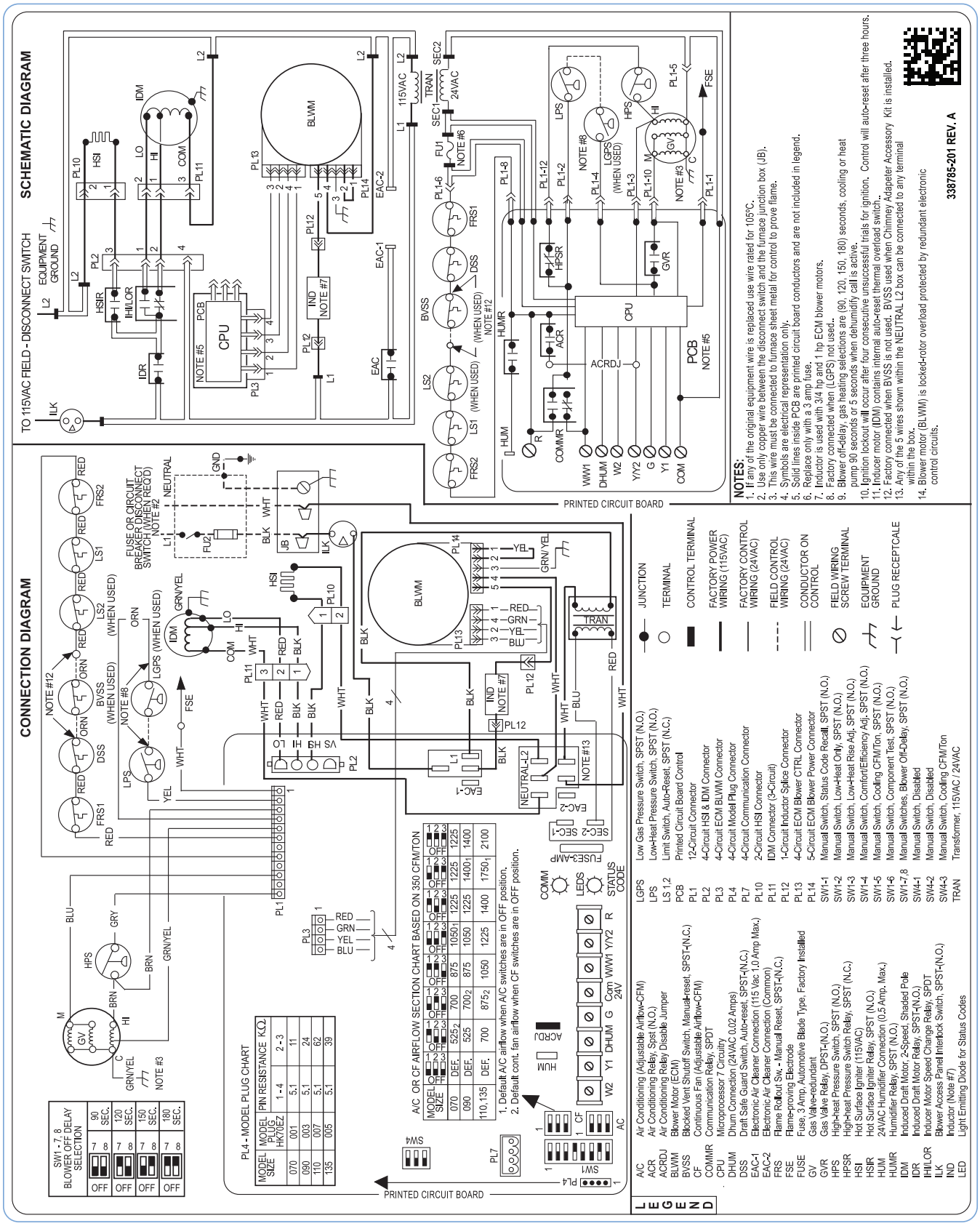

A12057

Fig. 54 - Wiring Diagram

Table 11 – Gas Rate (CU ft./hr)

SECONDS G FOR 1 REVOLUTION	SIZE OF TEST DIAL			SECONDS FOR 1 REVOLUTION	SIZE OF TEST DIAL		
	1 Cu Ft.	2 Cu Ft.	5 Cu Ft.		1 Cu Ft.	2 Cu Ft.	5 Cu Ft.
10	360	720	1800	50	72	144	360
11	327	655	1636	51	71	141	355
12	300	600	1500	52	69	138	346
13	277	555	1385	53	68	136	340
14	257	514	1286	54	67	133	333
15	240	480	1200	55	65	131	327
16	225	450	1125	56	64	129	321
17	212	424	1059	57	63	126	316
18	200	400	1000	58	62	124	310
19	189	379	947	59	61	122	305
20	180	360	900	60	60	120	300
21	171	343	857	62	58	116	290
22	164	327	818	64	56	112	281
23	157	313	783	66	54	109	273
24	150	300	750	68	53	106	265
25	144	288	720	70	51	103	257
26	138	277	692	72	50	100	250
27	133	267	667	74	48	97	243
28	129	257	643	76	47	95	237
29	124	248	621	78	46	92	231
30	120	240	600	80	45	90	225
31	116	232	581	82	44	88	220
32	113	225	563	84	43	86	214
33	109	218	545	86	42	84	209
34	106	212	529	88	41	82	205
35	103	206	514	90	40	80	200
36	100	200	500	92	39	78	196
37	97	195	486	94	38	76	192
38	95	189	474	96	38	75	188
39	92	185	462	98	37	74	184
40	90	180	450	100	36	72	180
41	88	176	439	102	35	71	178
42	86	172	429	104	35	69	173
43	84	167	419	106	34	68	170
44	82	164	409	108	33	67	167
45	80	160	400	110	33	65	164
46	78	157	391	112	32	64	161
47	76	153	383	116	31	62	155
48	75	150	375	120	30	60	150
49	73	147	367				

Table 12 – Orifice Size and Manifold Pressure (In. W.C.) for Gas Input Rate
(Tabulated Data Based on 22,000 Btuh High-Heat/14,500 Btuh for Low-Heat per Burner, Derated 4 Percent for Each 1000 Ft. (305 M) Above Sea Level)

ALTITUDE RANGE FT. (M)		AVG. GAS HEAT VALUE (BTUH/CU FT.)	SPECIFIC GRAVITY OF NATURAL GAS							
			0.58		0.60		0.62		0.64	
			Orifice No.	Manifold Pressure High/Low	Orifice No.	Manifold Pressure High/Low	Orifice No.	Manifold Pressure High/Low	Orifice No.	Manifold Pressure High/Low
USA	0 to 2000 (0 to 610)	900	42	3.5/1.5	42	3.6/1.6	42	3.7/1.6	41	3.5/1.5
		925	42	3.3/1.4	42	3.4/1.5	42	3.5/1.5	42	3.7/1.6
		950	43	3.8/1.7	42	3.3/1.4	42	3.4/1.5	42	3.5/1.5
		975	43	3.6/1.6	43	3.8/1.6	42	3.2/1.4	42	3.3/1.4
		1000	43	3.5/1.5	43	3.6/1.6	43	3.7/1.6	43	3.8/1.7
		1025	43	3.3/1.4	43	3.4/1.5	43	3.5/1.5	43	3.6/1.6
		1050	44	3.6/1.6	43	3.2/1.4	43	3.4/1.5	43	3.5/1.5
		1075	44	3.4/1.5	44	3.5/1.5	43	3.2/1.4	43	3.3/1.4
		1100	44	3.3/1.4	44	3.4/1.5	44	3.5/1.5	43	3.2/1.4
ALTITUDE RANGE FT. (M)		AVG. GAS HEAT VALUE (BTUH/CU FT.)	SPECIFIC GRAVITY OF NATURAL GAS							
			0.58		0.60		0.62		0.64	
			Orifice No.	Manifold Pressure High/Low	Orifice No.	Manifold Pressure High/Low	Orifice No.	Manifold Pressure High/Low	Orifice No.	Manifold Pressure High/Low
USA	2001 to 3000 (610 to 914)	800	42	3.4/1.5	42	3.5/1.5	42	3.6/1.6	42	3.7/1.6
		825	42	3.2/1.4	42	3.3/1.4	42	3.4/1.5	42	3.5/1.5
		850	43	3.7/1.6	43	3.8/1.6	42	3.2/1.4	42	3.3/1.4
		875	43	3.5/1.5	43	3.6/1.6	43	3.7/1.6	43	3.8/1.7
		900	43	3.3/1.4	43	3.4/1.5	43	3.5/1.5	43	3.6/1.6
		925	44	3.5/1.5	43	3.2/1.4	43	3.3/1.4	43	3.4/1.5
		950	44	3.4/1.5	44	3.5/1.5	44	3.6/1.6	43	3.2/1.4
		975	44	3.2/1.4	44	3.3/1.4	44	3.4/1.5	44	3.5/1.5
		1000	45	3.7/1.6	45	3.8/1.7	44	3.2/1.4	44	3.4/1.5
ALTITUDE RANGE FT. (M)		AVG. GAS HEAT VALUE (BTUH/CU FT.)	SPECIFIC GRAVITY OF NATURAL GAS							
			0.58		0.60		0.62		0.64	
			Orifice No.	Manifold Pressure High/Low	Orifice No.	Manifold Pressure High/Low	Orifice No.	Manifold Pressure High/Low	Orifice No.	Manifold Pressure High/Low
USA	3001 to 4000 (914 to 1219)	775	42	3.2/1.4	42	3.3/1.4	42	3.4/1.5	42	3.5/1.5
		800	43	3.6/1.6	43	3.8/1.6	42	3.2/1.4	42	3.3/1.4
		825	43	3.4/1.5	43	3.5/1.5	43	3.7/1.6	43	3.8/1.6
		850	43	3.2/1.4	43	3.3/1.4	43	3.4/1.5	43	3.6/1.5
		875	44	3.5/1.5	44	3.6/1.6	43	3.3/1.4	43	3.4/1.5
		900	44	3.3/1.4	44	3.4/1.5	44	3.5/1.5	43	3.2/1.4
		925	45	3.8/1.6	44	3.2/1.4	44	3.3/1.5	44	3.4/1.5
		950	46	3.8/1.6	45	3.7/1.6	45	3.8/1.7	44	3.3/1.4
ALTITUDE RANGE FT. (M)		AVG. GAS HEAT VALUE (BTUH/CU FT.)	SPECIFIC GRAVITY OF NATURAL GAS							
			0.58		0.60		0.62		0.64	
			Orifice No.	Manifold Pressure High/Low	Orifice No.	Manifold Pressure High/Low	Orifice No.	Manifold Pressure High/Low	Orifice No.	Manifold Pressure High/Low
USA	4001 to 5000 (1219 to 1524)	750	43	3.6/1.6	43	3.8/1.6	42	3.2/1.4	42	3.3/1.4
		775	43	3.4/1.5	43	3.5/1.5	43	3.6/1.6	43	3.8/1.6
		800	43	3.2/1.4	43	3.3/1.4	43	3.4/1.5	43	3.5/1.5
		825	44	3.4/1.5	44	3.6/1.5	43	3.2/1.4	43	3.3/1.4
		850	44	3.2/1.4	44	3.4/1.5	44	3.5/1.5	44	3.6/1.6
		875	45	3.7/1.6	45	3.8/1.7	44	3.3/1.4	44	3.4/1.5
		900	46	3.7/1.6	46	3.8/1.7	45	3.7/1.6	44	3.2/1.4
		925	46	3.5/1.5	46	3.6/1.6	46	3.7/1.6	46	3.8/1.7

* Orifice numbers 43 are factory installed

Table 12 - Orifice Size and Manifold Pressure (In. W.C.) for Gas Input Rate (Con't.)
(Tabulated Data Based on 22,000 Btuh High-Heat/14,500 Btuh for Low-Heat per Burner, Derated 4 Percent for Each 1000 Ft. Above Sea Level)

ALTITUDE RANGE FT. (M)		AVG. GAS HEAT VALUE AT ALTITUDE (BTUH/CU FT.)	SPECIFIC GRAVITY OF NATURAL GAS							
			0.58		0.60		0.62		0.64	
			Orifice No.	Manifold Pressure High/Low	Orifice No.	Manifold Pressure High/Low	Orifice No.	Manifold Pressure High/Low	Orifice No.	Manifold Pressure High/Low
USA	5001 to 6000 (1524 to 1829)	725	43	3.4/1.5	43	3.5/1.5	43	3.6/1.6	43	3.7/1.6
		750	43	3.2/1.4	43	3.3/1.4	43	3.4/1.5	43	3.5/1.5
		775	44	3.4/1.5	44	3.5/1.5	43	3.2/1.4	43	3.3/1.4
		800	44	3.2/1.4	44	3.3/1.4	44	3.4/1.5	44	3.5/1.5
		825	46	3.8/1.7	45	3.8/1.6	44	3.2/1.4	44	3.3/1.4
		850	46	3.6/1.6	46	3.7/1.6	46	3.8/1.7	45	3.8/1.6
		875	47	3.8/1.7	46	3.5/1.5	46	3.6/1.6	46	3.7/1.6
		900	47	3.6/1.6	47	3.8/1.6	46	3.4/1.5	46	3.5/1.5
ALTITUDE RANGE FT. (M)		AVG. GAS HEAT VALUE AT ALTITUDE (BTUH/CU FT.)	SPECIFIC GRAVITY OF NATURAL GAS							
			0.58		0.60		0.62		0.64	
			Orifice No.	Manifold Pressure High/Low	Orifice No.	Manifold Pressure High/Low	Orifice No.	Manifold Pressure High/Low	Orifice No.	Manifold Pressure High/Low
USA	6001 to 7000 (1829 to 2134)	675	43	3.4/1.5	43	3.5/1.5	43	3.6/1.6	43	3.7/1.6
		700	44	3.6/1.6	43	3.3/1.4	43	3.4/1.5	43	3.5/1.5
		725	44	3.4/1.5	44	3.5/1.5	44	3.6/1.6	43	3.2/1.4
		750	45	3.8/1.7	44	3.3/1.4	44	3.4/1.5	44	3.5/1.5
		775	46	3.7/1.6	45	3.7/1.6	45	3.8/1.7	44	3.2/1.4
		800	46	3.5/1.5	46	3.6/1.6	46	3.8/1.6	45	3.7/1.6
		825	47	3.7/1.6	46	3.4/1.5	46	3.5/1.5	46	3.6/1.6
		850	47	3.5/1.5	47	3.6/1.6	47	3.8/1.6	46	3.4/1.5
ALTITUDE RANGE FT. (M)		AVG. GAS HEAT VALUE AT ALTITUDE (BTUH/CU FT.)	SPECIFIC GRAVITY OF NATURAL GAS							
			0.58		0.60		0.62		0.64	
			Orifice No.	Manifold Pressure High/Low	Orifice No.	Manifold Pressure High/Low	Orifice No.	Manifold Pressure High/Low	Orifice No.	Manifold Pressure High/Low
USA	7001 to 8000 (2134 to 2438)	650	44	3.6/1.6	43	3.2/1.4	43	3.4/1.5	43	3.5/1.5
		675	44	3.3/1.5	44	3.5/1.5	44	3.6/1.6	43	3.2/1.4
		700	45	3.8/1.6	44	3.2/1.4	44	3.3/1.4	44	3.4/1.5
		725	46	3.7/1.6	46	3.8/1.7	45	3.7/1.6	44	3.2/1.4
		750	46	3.4/1.5	46	3.6/1.5	46	3.7/1.6	46	3.8/1.6
		775	47	3.6/1.6	47	3.8/1.6	46	3.4/1.5	46	3.6/1.5
		800	47	3.4/1.5	47	3.5/1.5	47	3.7/1.6	47	3.8/1.6
		825	48	3.7/1.6	48	3.8/1.6	47	3.4/1.5	47	3.6/1.5
ALTITUDE RANGE FT. (M)		AVG. GAS HEAT VALUE AT ALTITUDE (BTUH/CU FT.)	SPECIFIC GRAVITY OF NATURAL GAS							
			0.58		0.60		0.62		0.64	
			Orifice No.	Manifold Pressure High/Low	Orifice No.	Manifold Pressure High/Low	Orifice No.	Manifold Pressure High/Low	Orifice No.	Manifold Pressure High/Low
USA	8001 to 9000 (2438 to 2743)	625	44	3.3/1.5	44	3.5/1.5	44	3.6/1.6	43	3.2/1.4
		650	45	3.7/1.6	44	3.2/1.4	44	3.3/1.4	44	3.4/1.5
		675	46	3.6/1.6	46	3.8/1.6	45	3.7/1.6	45	3.8/1.7
		700	47	3.8/1.7	46	3.5/1.5	46	3.6/1.6	46	3.7/1.6
		725	47	3.6/1.6	47	3.7/1.6	47	3.8/1.7	46	3.5/1.5
		750	48	3.8/1.7	47	3.5/1.5	47	3.6/1.6	47	3.7/1.6
		775	48	3.6/1.5	48	3.7/1.6	48	3.8/1.7	47	3.5/1.5
USA	9001 to 10,000 2743 to 3048)	600	45	3.7/1.6	45	3.8/1.7	44	3.3/1.4	44	3.4/1.5
		625	46	3.6/1.6	46	3.7/1.6	46	3.8/1.7	45	3.8/1.6
		650	47	3.8/1.6	46	3.4/1.5	46	3.6/1.5	46	3.7/1.6
		675	47	3.5/1.5	47	3.6/1.6	47	3.7/1.6	46	3.4/1.5
		700	48	3.7/1.6	48	3.8/1.7	47	3.5/1.5	47	3.6/1.6
		725	48	3.5/1.5	48	3.6/1.6	48	3.7/1.6	48	3.8/1.7

* Orifice numbers 43 are factory installed

PG8MVA

Table 13 – Orifice Size and Manifold Pressure (In. W.C.) for Gas Input Rate
(Tabulated Data Based on 21,000 Btuh High-Heat/14,500 Btuh for Low-Heat Per Burner, Derated 4 Percent for Each 1000 Ft. (305 M) Above Sea level)

ALTITUDE RANGE FT. (M)		AVG. GAS HEAT VALUE (BTUH/CU FT.)	SPECIFIC GRAVITY OF NATURAL GAS							
			0.58		0.60		0.62		0.64	
			Orifice No.	Manifold Pressure High/Low	Orifice No.	Manifold Pressure High/Low	Orifice No.	Manifold Pressure High/Low	Orifice No.	Manifold Pressure High/Low
USA	0 to 2000 (0 to 610)	900	42	3.2/1.5	42	3.3/1.6	42	3.4/1.6	42	3.5/1.7
		925	43	3.7/1.8	43	3.8/1.8	42	3.2/1.5	42	3.3/1.6
		950	43	3.5/1.7	43	3.6/1.7	43	3.7/1.8	43	3.8/1.8
		975	43	3.3/1.6	43	3.4/1.6	43	3.5/1.7	43	3.7/1.7
		1000	44	3.6/1.7	43	3.3/1.6	43	3.4/1.6	43	3.5/1.7
		1025	44	3.4/1.6	44	3.6/1.7	43	3.2/1.5	43	3.3/1.6
		1050	44	3.3/1.6	44	3.4/1.6	44	3.5/1.7	43	3.2/1.5
		1075	45	3.8/1.8	44	3.2/1.5	44	3.3/1.6	44	3.4/1.6
		1100	46	3.8/1.8	45	3.7/1.8	44	3.2/1.5	44	3.3/1.6
			SPECIFIC GRAVITY OF NATURAL GAS							
ALTITUDE RANGE FT. (M)		AVG. GAS HEAT VALUE (BTUH/CU FT.)	0.58		0.60		0.62		0.64	
			Orifice No.	Manifold Pressure High/Low	Orifice No.	Manifold Pressure High/Low	Orifice No.	Manifold Pressure High/Low	Orifice No.	Manifold Pressure High/Low
USA	2001 to 3000 (610 to 914)	800	43	3.8/1.8	42	3.2/1.5	42	3.3/1.6	42	3.4/1.6
		825	43	3.5/1.7	43	3.7/1.7	43	3.8/1.8	42	3.2/1.5
		850	43	3.3/1.6	43	3.5/1.6	43	3.6/1.7	43	3.7/1.8
		875	43	3.2/1.5	43	3.3/1.6	43	3.4/1.6	43	3.5/1.7
		900	44	3.4/1.6	44	3.5/1.7	43	3.2/1.5	43	3.3/1.6
		925	44	3.2/1.5	44	3.3/1.6	44	3.5/1.6	44	3.6/1.7
		950	45	3.7/1.8	45	3.8/1.8	44	3.3/1.6	44	3.4/1.6
		975	46	3.7/1.8	46	3.8/1.8	45	3.8/1.8	44	3.2/1.5
		1000	46	3.5/1.7	46	3.6/1.7	46	3.8/1.8	45	3.7/1.8
			SPECIFIC GRAVITY OF NATURAL GAS							
ALTITUDE RANGE FT. (M)		AVG. GAS HEAT VALUE (BTUH/CU FT.)	0.58		0.60		0.62		0.64	
			Orifice No.	Manifold Pressure High/Low	Orifice No.	Manifold Pressure High/Low	Orifice No.	Manifold Pressure High/Low	Orifice No.	Manifold Pressure High/Low
USA	3001 to 4000 (914 to 1219)	775	43	3.5/1.7	43	3.7/1.7	43	3.8/1.8	42	3.2/1.5
		800	43	3.3/1.6	43	3.4/1.6	43	3.5/1.7	43	3.7/1.7
		825	44	3.6/1.7	43	3.2/1.5	43	3.3/1.6	43	3.4/1.6
		850	44	3.4/1.6	44	3.5/1.7	44	3.6/1.7	43	3.2/1.5
		875	45	3.8/1.8	44	3.3/1.6	44	3.4/1.6	44	3.5/1.7
		900	46	3.8/1.8	45	3.8/1.8	44	3.2/1.5	44	3.3/1.6
		925	46	3.6/1.7	46	3.7/1.8	45	3.7/1.8	45	3.8/1.8
		950	46	3.4/1.6	46	3.5/1.7	46	3.7/1.7	46	3.8/1.8
			SPECIFIC GRAVITY OF NATURAL GAS							
ALTITUDE RANGE FT. (M)		AVG. GAS HEAT VALUE (BTUH/CU FT.)	0.58		0.60		0.62		0.64	
			Orifice No.	Manifold Pressure High/Low	Orifice No.	Manifold Pressure High/Low	Orifice No.	Manifold Pressure High/Low	Orifice No.	Manifold Pressure High/Low
USA	4001 to 5000 (1219 to 1524)	750	43	3.3/1.6	43	3.4/1.6	43	3.5/1.7	43	3.6/1.7
		775	44	3.6/1.7	43	3.2/1.5	43	3.3/1.6	43	3.4/1.6
		800	44	3.3/1.6	44	3.4/1.6	44	3.6/1.7	43	3.2/1.5
		825	45	3.8/1.8	44	3.2/1.5	44	3.4/1.6	44	3.5/1.6
		850	46	3.8/1.8	45	3.7/1.8	45	3.8/1.8	44	3.3/1.6
		875	46	3.5/1.7	46	3.7/1.7	46	3.8/1.8	45	3.7/1.8
		900	47	3.8/1.8	46	3.5/1.7	46	3.6/1.7	46	3.7/1.8
		925	47	3.6/1.7	47	3.7/1.8	47	3.8/1.8	46	3.5/1.7

* Orifice numbers 43 are factory installed

PG8MVA

Table 13 - Orifice Size and Manifold Pressure (In. W.C.) for Gas Input Rate (Con't.)
(Tabulated Data Based on 21,000 Btuh High-Heat/14,500 Btuh for Low-Heat Per Burner, Derated 4 Percent for Each 1000 Ft. (305 M) Above Sea level)

ALTITUDE RANGE FT. (M)		AVG. GAS HEAT VALUE AT ALTITUDE (BTUH/CU FT.)	SPECIFIC GRAVITY OF NATURAL GAS							
			0.58		0.60		0.62		0.64	
			Orifice No.	Manifold Pressure High/Low	Orifice No.	Manifold Pressure High/Low	Orifice No.	Manifold Pressure High/Low	Orifice No.	Manifold Pressure High/Low
USA	5001 to 6000 (1524 to 1829)	725	44	3.5/1.7	43	3.2/1.5	43	3.3/1.6	43	3.4/1.6
		750	44	3.3/1.6	44	3.4/1.6	44	3.5/1.7	43	3.2/1.5
		775	45	3.7/1.8	44	3.2/1.5	44	3.3/1.6	44	3.4/1.6
		800	46	3.7/1.8	46	3.8/1.8	45	3.8/1.8	44	3.2/1.5
		825	46	3.5/1.7	46	3.6/1.7	46	3.7/1.8	46	3.8/1.8
		850	47	3.7/1.8	47	3.8/1.8	46	3.5/1.7	46	3.6/1.7
		875	47	3.5/1.7	47	3.6/1.7	47	3.7/1.8	46	3.4/1.6
		900	48	3.8/1.8	47	3.4/1.6	47	3.5/1.7	47	3.7/1.7
ALTITUDE RANGE FT. (M)		AVG. GAS HEAT VALUE AT ALTITUDE (BTUH/CU FT.)	SPECIFIC GRAVITY OF NATURAL GAS							
			0.58		0.60		0.62		0.64	
			Orifice No.	Manifold Pressure High/Low	Orifice No.	Manifold Pressure High/Low	Orifice No.	Manifold Pressure High/Low	Orifice No.	Manifold Pressure High/Low
USA	6001 to 7000 (1829 to 2134)	675	44	3.5/1.7	43	3.2/1.5	43	3.3/1.6	43	3.4/1.6
		700	44	3.3/1.6	44	3.4/1.6	44	3.5/1.7	43	3.2/1.5
		725	45	3.7/1.8	45	3.8/1.8	44	3.3/1.6	44	3.4/1.6
		750	46	3.6/1.7	46	3.8/1.8	45	3.7/1.8	45	3.8/1.8
		775	46	3.4/1.6	46	3.5/1.7	46	3.6/1.7	46	3.8/1.8
		800	47	3.6/1.7	47	3.8/1.8	46	3.4/1.6	46	3.5/1.7
		825	47	3.4/1.6	47	3.5/1.7	47	3.6/1.7	47	3.8/1.8
		850	48	3.7/1.7	48	3.8/1.8	47	3.4/1.6	47	3.5/1.7
ALTITUDE RANGE FT. (M)		AVG. GAS HEAT VALUE AT ALTITUDE (BTUH/CU FT.)	SPECIFIC GRAVITY OF NATURAL GAS							
			0.58		0.60		0.62		0.64	
			Orifice No.	Manifold Pressure High/Low	Orifice No.	Manifold Pressure High/Low	Orifice No.	Manifold Pressure High/Low	Orifice No.	Manifold Pressure High/Low
USA	7001 to 8000 (2134 to 2438)	650	44	3.3/1.6	44	3.4/1.6	44	3.5/1.7	43	3.2/1.5
		675	45	3.7/1.8	45	3.8/1.8	44	3.3/1.6	44	3.4/1.6
		700	46	3.6/1.7	46	3.7/1.8	46	3.8/1.8	45	3.8/1.8
		725	47	3.8/1.8	46	3.5/1.7	46	3.6/1.7	46	3.7/1.8
		750	47	3.5/1.7	47	3.7/1.8	47	3.8/1.8	46	3.5/1.6
		775	48	3.8/1.8	47	3.4/1.6	47	3.6/1.7	47	3.7/1.7
		800	48	3.6/1.7	48	3.7/1.8	48	3.8/1.8	47	3.4/1.6
		825	48	3.3/1.6	48	3.5/1.6	48	3.6/1.7	48	3.7/1.8
ALTITUDE RANGE FT. (M)		AVG. GAS HEAT VALUE AT ALTITUDE (BTUH/CU FT.)	SPECIFIC GRAVITY OF NATURAL GAS							
			0.58		0.60		0.62		0.64	
			Orifice No.	Manifold Pressure High/Low	Orifice No.	Manifold Pressure High/Low	Orifice No.	Manifold Pressure High/Low	Orifice No.	Manifold Pressure High/Low
USA	8001 to 9000 (2438 to 2743)	625	45	3.7/1.8	45	3.8/1.8	44	3.3/1.6	44	3.4/1.6
		650	46	3.6/1.7	46	3.7/1.8	46	3.8/1.8	45	3.8/1.8
		675	47	3.8/1.8	46	3.4/1.6	46	3.5/1.7	46	3.7/1.7
		700	47	3.5/1.7	47	3.6/1.7	47	3.7/1.8	46	3.4/1.6
		725	48	3.7/1.8	48	3.8/1.8	47	3.5/1.7	47	3.6/1.7
		750	48	3.5/1.7	48	3.6/1.7	48	3.7/1.8	48	3.8/1.8
		775	49	3.8/1.8	48	3.4/1.6	48	3.5/1.7	48	3.6/1.7
USA	9001 to 10,000 (2743 to 3048)	600	46	3.6/1.7	46	3.7/1.8	46	3.8/1.8	45	3.7/1.8
		625	47	3.7/1.8	47	3.8/1.8	46	3.5/1.7	46	3.6/1.7
		650	47	3.4/1.6	47	3.6/1.7	47	3.7/1.8	47	3.8/1.8
		675	48	3.6/1.7	48	3.8/1.8	47	3.4/1.6	47	3.5/1.7
		700	48	3.4/1.6	48	3.5/1.7	48	3.6/1.7	48	3.7/1.8
		725	49	3.7/1.8	49	3.8/1.8	48	3.4/1.6	48	3.5/1.7

* Orifice numbers 43 are factory installed

PG8MVA

Check Safety Controls

The flame sensor, gas valve, and pressure switch were all checked in the Start-up procedure section as part of normal operation.

1. Check Main Limit Switch
   This control shuts off combustion system and energizes air-circulating blower motor, if furnace overheats. By using this method to check limit control, it can be established that limit is functioning properly and will operate if there is a restricted return-air supply or motor failure. If limit control does not function during this test, cause must be determined and corrected.
   a. Run furnace for at least 5 minutes.
   b. Gradually block off return air with a piece of cardboard or sheet metal until the limit trips.
   c. Unblock return air to permit normal circulation.
   d. Burners will re-light when furnace cools down.
2. Check draft safeguard switch. The purpose of this control is to cause the safe shutdown of the furnace during certain blocked vent conditions.
   a. Verify vent pipe is cool to the touch.
   b. Disconnect power to furnace and remove vent connector from furnace vent elbow.
   c. Restore power to furnace and set room thermostat above room temperature.
   d. After normal start-up, allow furnace to operate for 2 minutes, then block vent elbow in furnace 80 percent of vent area with a piece of flat sheet metal.
   e. Furnace should cycle off within 2 minutes. If gas does not shut off within 2 minutes, determine reason draft safeguard switch did not function properly and correct condition.
   f. Remove blockage from furnace vent elbow.
   g. Switch will auto-reset when it cools.
   h. Re-install vent connector.

NOTE: Should switch remain open longer than 3 minutes, furnace control board will lockout the furnace for 3 hours. To reset furnace control board, turn thermostat below room temperature or from HEAT to OFF and turn 115-v power OFF, then back ON.

3. Check Pressure Switch(es)
   This control proves operation of the draft inducer blower.
   a. Turn off 115-v power to furnace.
   b. Disconnect inducer motor lead wires from wire harness.
   c. Turn on 115-v power to furnace.
   d. Set thermostat to "call for heat" and wait 1 minute. When pressure switch is functioning properly, hot surface igniter should NOT glow and control diagnostic light flashes a status code 32. If hot surface igniter glows when inducer motor is disconnected, shut down furnace immediately.
   e. Determine reason pressure switch did not function properly and correct condition.
   f. Turn off 115-v power to furnace.
   g. Reconnect inducer motor wires, replace outer door, and turn on 115-v power.
   h. Blower will run for 90 seconds before beginning the call for heat again.
   i. Furnace should ignite normally.

Checklist

1. Put away tools and instruments. Clean up debris.
2. Verify that switches SW1-1 and SW1-6 are OFF and other setup switches are set as desired. Verify that switches SW1-7 and SW1-8 for the blower OFF DELAY are set as desired per Fig. 52.
3. Verify that blower and burner access doors are properly installed.
4. Cycle test furnace with room thermostat.
5. Check operation of accessories per manufacturer's instructions.
6. Review User's Guide with owner.
7. Attach literature packet to furnace.

SERVICE AND MAINTENANCE PROCEDURES

⚠ WARNING

FIRE, INJURY OR DEATH HAZARD

Failure to follow this warning could result in personal injury, death and/or property damage.

The ability to properly perform maintenance on this equipment requires certain knowledge, mechanical skills, tools, and equipment. If you do not possess these, do not attempt to perform any maintenance on this equipment other than those procedures recommended in the User's Manual.

⚠ CAUTION

ENVIRONMENTAL HAZARD

Failure to follow this caution may result in environmental pollution.

Remove and recycle all components or materials (i.e. oil, refrigerant, control board, etc.) before unit final disposal.

⚠ WARNING

ELECTRICAL SHOCK, FIRE OR EXPLOSION HAZARD

Failure to follow this warning could result in personal injury or death, or property damage.

Before installing, modifying, or servicing system, main electrical disconnect switch must be in the OFF position and install a lockout tag. There may be more than one disconnect switch. Lock out and tag switch with a suitable warning label. Verify proper operation after servicing.

⚠ CAUTION

ELECTRICAL OPERATION HAZARD

Failure to follow this caution may result in improper furnace operation or failure of furnace.

Label all wires prior to disconnection when servicing controls. Wiring errors can cause improper and dangerous operation.

General

These instructions are written as if the furnace is installed in an upflow application. An upflow furnace application is where the blower is located below the combustion and controls section of

the furnace, and conditioned air is discharged upward. Since this furnace can be installed in any of the 4 positions shown in Fig. 5, you must revise your orientation to component location accordingly.

Electrical Controls and Wiring

⚠ WARNING

ELECTRICAL SHOCK HAZARD

Failure to follow this warning could result in personal injury or death.

There may be more than one electrical supply to the furnace. Check accessories and cooling unit for additional electrical supplies that must be shut off during furnace servicing. Lock out and tag switch with a suitable warning label.

The electrical ground and polarity for 115-v wiring must be properly maintained. Refer to Fig. 25 for field wiring information and to Fig. 54 for furnace wiring information.

NOTE: If the polarity is not correct, the STATUS LED on the control will flash rapidly and prevent the furnace from heating. The control system also requires an earth ground for proper operation of the control and flame-sensing electrode.

The 24-v circuit contains an automotive-type, 3-amp. fuse located on the control. (See Fig. 26.) Any shorts of the 24-v wiring during installation, service, or maintenance will cause this fuse to blow. If fuse replacement is required, use ONLY a 3-amp. fuse. The control LED will display status code 24 when fuse needs to be replaced.

Proper instrumentation is required to service electrical controls. The control in this furnace is equipped with a Status Code LED (Light-Emitting Diode) to aid in installation, servicing, and troubleshooting. Status codes can be viewed at the sight glass in blower access door. The amber furnace control LED is either ON continuously, rapid flashing, or a code composed of 2 digits. The first digit is the number of short flashes, the second digit is the number of long flashes.

For an explanation of status codes, refer to service label located on blower access door or Fig. 53, and the troubleshooting guide which can be obtained from your distributor.

See Fig. 59, a brief Troubleshooting Guide.

For 2-Stage Variable Speed ECM Controls the stored status codes will NOT be erased from the control memory, when 115- or 24-v power is interrupted. The control will store up to the last 7 Status Codes in order of occurrence.

1. To retrieve status codes, proceed with the following:

NOTE: NO thermostat signal may be present at control, and all blower-OFF delays must be completed.

   a. Leave 115-v power to furnace turned on.
   b. Remove outer access door.
   c. Look into blower access door sight glass for current LED status.
   d. Remove blower access door.

NOTE: The Status Codes cannot be retrieved by disconnecting the limit switch or draft safeguard switch. To retrieve Status Codes, follow the procedure below.

2. Turn Setup Switch, SW1-1 "ON."
3. Manually close blower access door switch.
4. Control will flash up to 7 Status Codes.
5. The last Status Code, or 8th Code, will be Code 11.
6. Turn SW1-1 "OFF."
7. A continuously-lit Amber LED will appear and indicates proper operation.
8. Release blower access door switch, install blower access door and replace outer door or refer to the SERVICE label on the front of the blower access door for more information.

Component Self-Test

Component Test can ONLY be initiated by performing the following:

1. Remove outer access door.
2. Remove blower access door.
3. Remove the wire from the "R" terminal of the control board.
4. Turn Setup Switch, SW-1-6 "ON."
5. Manually close blower access door switch.

Blower access door switch opens 115-v power to control. No component operation can occur unless switch is closed. Caution must be taken when manually closing this switch for service purposes.

⚠ WARNING

ELECTRICAL SHOCK HAZARD

Failure to follow this warning could result in personal injury, or death.

Blower access door switch opens 115-v power to furnace control. No component operation can occur unless switch is closed. Exercise caution to avoid electrical shock from exposed electrical components when manually closing this switch for service purposes.

6. Component Test sequence will function as follows:
   a. Inducer motor starts on high-speed and continues to run until Step (d.) of component test sequence.
   b. Hot surface igniter is energized for 15 sec, then deenergized.
   c. Blower operates for 10 sec, then turns off.
   d. Inducer motor goes to low-speed for 10 seconds, then turns off.
   e. After component test is completed, one or more status codes (11, 25, or 41) will flash. See component test section of service label for explanation of status codes.

NOTE: To repeat component test, turn setup switch SW1-6 OFF then back ON.

   f. Turn setup switch SW1-6 OFF.

7. RELEASE BLOWER ACCESS DOOR SWITCH, reattach wire to "R" terminal on furnace control board, replace blower access door, and replace outer access door.

CARE AND MAINTENANCE

⚠ WARNING

FIRE OR EXPLOSION HAZARD

Failure to follow this warning could result in personal injury, death and/or property damage.

Never store anything on, near, or in contact with the furnace, such as:

1. Spray or aerosol cans, rags, brooms, dust mops, vacuum cleaners, or other cleaning tools.
2. Soap powders, bleaches, waxes or other cleaning compounds, plastic or plastic containers, gasoline, kerosene, cigarette lighter fluid, dry cleaning fluids, or other volatile fluids.
3. Paint thinners and other painting compounds, paper bags, or other paper products. Exposure to these materials could lead to corrosion of the heat exchangers.

For continuing high performance and to minimize possible furnace failure, periodic maintenance must be performed on this furnace. Consult your local dealer about proper frequency of maintenance and the availability of a maintenance contract.

⚠ WARNING

ELECTRICAL SHOCK AND FIRE HAZARD

Failure to follow this warning could result in personal injury, death, and/or property damage.

Turn off the gas and electrical supplies to the furnace and install lockout tag before performing any maintenance or service. Follow the operating instructions on the label attached to the furnace.

⚠ WARNING

CARBON MONOXIDE POISONING AND FIRE HAZARD

Failure to follow this warning could result in personal injury, death and/or property damage.

Never operate furnace without a filter or with filter access door removed.

⚠ CAUTION

CUT HAZARD

Failure to follow this caution may result in personal injury.

Sheet metal parts may have sharp edges or burrs. Use care and wear appropriate protective clothing, safety glasses and gloves when handling parts, and servicing furnaces.

The minimum maintenance on this furnace is as follows:

1. Check and clean air filter each month or more frequently if required. Replace if torn.
2. Check blower motor and wheel for cleanliness each heating and cooling season. Clean as necessary.
3. Check electrical connections for tightness and controls for proper operation each heating season. Service as necessary.
4. Inspect burner compartment before each heating season for rust, corrosion, soot or excessive dust. If necessary, have furnace and burner serviced by a qualified service agency.
5. Inspect the vent pipe/vent system before each heating season for rust, corrosion, water leakage, sagging pipes or broken fittings. Have vent pipes/vent system serviced by a qualified service agency.
6. Inspect any accessories attached to the furnace such as a humidifier or electronic air cleaner. Perform any service or maintenance to the accessories as recommended in the accessory instructions.

Cleaning and/or Replacing Air Filter

The air filter arrangement will vary depending on the application.

NOTE: If the filter has an airflow direction arrow, the arrow must point towards the blower.

⚠ CAUTION

CUT HAZARD

Failure to follow this caution may result in personal injury.

Sheet metal parts may have sharp edges or burrs. Use care and wear appropriate protective clothing, safety glasses and gloves when handling parts, and servicing furnaces.

Media cabinet filter procedures:

1. Turn off electrical supply to furnace before removing filter access door.
2. Remove filter cabinet door.
3. Slide filter out of cabinet.
4. If equipped with permanent, washable 3/4-in. (19 mm) filter, clean filter by spraying cold tap water through filter in opposite direction of airflow. Rinse filter and let dry. Oiling or coating of the filter is not recommended. See Table 13 for size information.
5. If equipped with factory-specified disposable media filter, replace only with media filter having the same part number and size. For expandable replacement media, refer to the instructions included with the replacement media.
6. Slide filter into cabinet.
7. Replace filter cabinet door.
8. Turn on electrical supply to furnace.

Blower Motor and Wheel

⚠ WARNING

ELECTRICAL SHOCK HAZARD

Failure to follow this warning could result in personal injury or death.

Blower access door switch opens 115-v power to control. No component operation can occur unless switch is closed. Caution must be taken when manually closing this switch for service purposes.

NOTE: The blower wheel should not be dropped or bent as balance will be affected.

The following steps should be performed by a qualified service agency.

To ensure long life and high efficiency, clean accumulated dirt and grease from blower wheel and motor annually.

Table 14 – Filter Size Information - In. (mm)

FURNACE CASING WIDTH	FILTER SIZE		FILTER TYPE
	SIDE RETURN	BOTTOM RETURN	
14–1/2 (368)	16 X 25 X 3/4 (406 X 635 X 19)	14 X 25 X 3/4 (356 X 635 X 19)	Washable*
17–1/2 (445)	16 X 25 X 3/4 (406 X 635 X 19)	16 X 25 X 3/4 (406 X 635 X 19)	Washable*
21 (533)	16 X 25 X 3/4 (406 X 635 X 19)	20 X 25 X 3/4 (508 X 635 X 19)	Washable*
24 (610)	16 X 25 X 3/4 (406 X 635 X 19)	24 X 25 X 3/4 (610 X 635 X 19)	Washable*

* Recommended

The inducer and blower motors are pre-lubricated and require no additional lubrication. These motors can be identified by the absence of oil ports on each end of the motor.

Clean blower motor and wheel as follows:

1. Turn off electrical supply to furnace.
2. Remove outer door.
3. For downflow or horizontal furnaces having vent pipes within the furnace that pass in front of the blower access door:
   a. Disconnect vent connector from furnace vent elbow.
   b. Disconnect and remove short piece of vent pipe from within furnace.
4. Remove 2 screws from blower access door and remove blower access door.
5. All factory wires can be left connected, but field thermostat connections may need to be disconnected depending on their length and routing.
6. Remove 2 screws holding blower assembly to blower deck and slide blower assembly out of furnace.
7. Clean blower wheel and motor using a vacuum with soft brush attachment. Blower wheel blades may be cleaned with a small paint or flux brush. Do not remove or disturb balance weights (clips) on blower wheel blades.
8. Vacuum any loose dust from blower housing, wheel and motor.
9. If a greasy residue is present on blower wheel, remove wheel from the blower housing and wash it with an appropriate degreaser. To remove wheel:

NOTE: Before disassembly, mark blower mounting arms, motor, and blower housing so motor and each arm is positioned at the same location during reassembly.

   a. Disconnect ground wire attached to blower housing.
   b. Remove screws securing cutoff plate and remove cutoff plate from housing.
   c. Loosen set screw holding blower wheel on motor shaft (160+/-20 in.-lb. when assembling).
   d. Remove bolts holding motor to blower housing and slide motor out of wheel (40+/-10 in.-lb. when reassembling).
   e. Remove blower wheel from housing.
   f. Clean wheel and housing.
10. Reassemble motor and blower by reversing steps 9a, through 9e. Be sure to reattach ground wire to the blower housing.
11. Verify that blower wheel is centered in blower housing and set screw contacts the flat portion of the motor shaft. Loosen set screw on blower wheel and reposition if necessary.
12. Spin the blower wheel by hand to verify that the wheel does not rub on the housing.
13. Reinstall blower assembly in furnace.
14. Reinstall 2 screws securing blower assembly to blower deck.
15. Reconnect blower leads to furnace control. Refer to furnace wiring diagram, and connect thermostat leads if previously disconnected.
16. To check blower for proper rotation:
    a. Turn on electrical supply.

⚠ WARNING

ELECTRICAL SHOCK HAZARD

Failure to follow this warning could result in personal injury, or death.

Blower access door switch opens 115-v power to furnace control. No component operation can occur unless switch is closed. Exercise caution to avoid electrical shock from exposed electrical components when manually closing this switch for service purposes.

    b. Manually close blower access door switch.

NOTE: If R-W/W1 thermostat terminals are jumpered at the time blower access door switch is closed, blower will run for 90 sec before beginning a heating cycle.

    c. Perform component self-test as shown at the bottom of the SERVICE label, located on the front of blower access door.
    d. Verify blower is rotating in the correct direction
17. If furnace is operating properly, RELEASE BLOWER ACCESS DOOR SWITCH. Remove any jumpers or reconnect any disconnected thermostat leads. Replace blower access door.
18. Downflow or horizontal furnaces with vent pipe through furnace only:
    a. Install and connect short piece of vent pipe inside furnace to existing vent.
    b. Connect vent connector to vent elbow.
19. Reinstall outer door.
20. Turn on gas supply and cycle furnace through one complete heating and cooling cycle. Verify the furnace temperature rise as shown in Adjustments Section. Adjust temperature rise as shown in Adjustments Section. If outdoor temperature is below 70°F, turn off circuit breaker to outdoor unit before running furnace in the cooling cycle. Turn outdoor circuit breaker on after completing cooling cycle.

Cleaning Heat Exchanger

The following steps should be performed by a qualified service agency:

NOTE: If the heat exchangers get a heavy accumulation of soot and carbon, they should be replaced rather than trying to clean them thoroughly. A build-up of soot and carbon indicates that a problem exists which needs to be corrected, such as improper adjustment of manifold pressure, insufficient or poor quality combustion air, incorrect size or damaged manifold orifice(s), improper gas, or a restricted heat exchanger. Action must be taken to correct the problem.

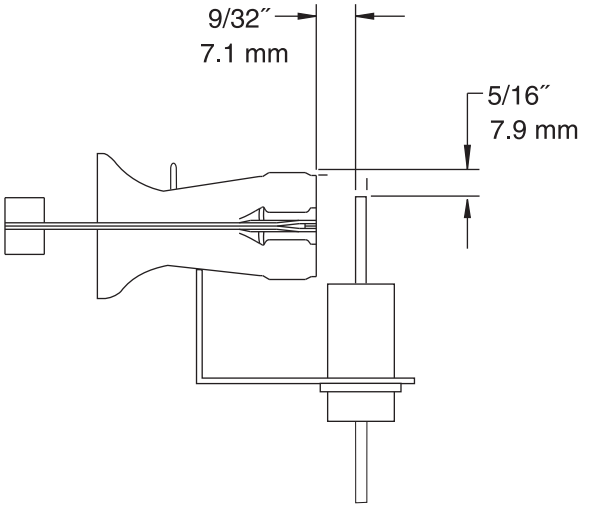

Fig. 55 - Igniter Position - Side View

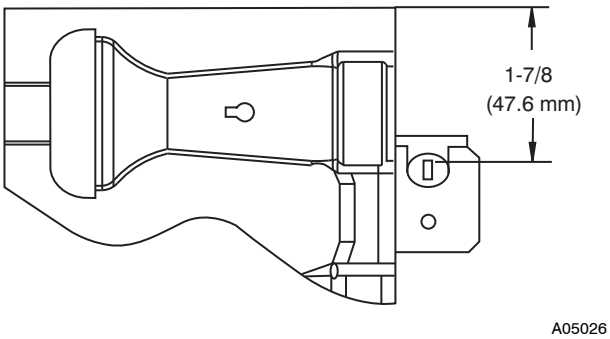

Fig. 56 - Igniter Position - Top View

If it becomes necessary to clean the heat exchangers because of dust or corrosion, proceed as follows:

1. Turn OFF gas and electrical power to furnace.
2. Remove outer access door.
3. Disconnect vent connector from furnace vent elbow.
4. For downflow or horizontal furnace having an internal vent pipe, remove internal vent pipe within the casing.
5. Disconnect wires to the following components. Mark wires to aid in reconnection (be careful when disconnecting wires from switches because damage may occur):
   a. Draft safeguard switch.
   b. Inducer motor.
   c. Pressure switches.
   d. Limit overtemperature switch.
   e. Gas valve.
   f. Hot surface igniter.
   g. Flame-sensing electrode.
   h. Flame rollout switches.
6. Remove screws that fasten the collector box assembly to the cell panel. Be careful not to damage the collector box. Inducer assembly and elbow need not be removed from collector box.
7. Disconnect gas line from gas manifold.
8. Remove the four screws that attach the burner assembly to the cell panel. The gas valve and individual burners need not be removed from support assembly. Remove NOx baffles, if installed.

NOTE: Be very careful when removing burner assembly to avoid breaking igniter. See Fig. 55-56 for correct igniter location.

9. Using field-provided 25-caliber rifle cleaning brush, 36-in. (914 mm) long, 1/4-in. (6 mm) diameter steel spring cable, a variable speed, follows:
   a. Remove metal screw fitting from wire brush to allow insertion into cable.
   b. Insert the twisted wire end of brush into end of spring cable, and crimp tight with crimping tool or crimp by striking with ball-peen hammer. TIGHTNESS IS VERY IMPORTANT.

NOTE: The materials needed in item 9 can usually be purchased at local hardware stores.

(1.) Attach variable-speed, reversible drill to the end of spring cable (end opposite brush).

(2.) Insert brush end of cable into the outlet opening of cell and slowly rotate with drill. DO NOT force cable. Gradually insert cable into upper pass of cell. (See Fig. 58.)

(3.) Work cable in and out of cell 3 or 4 times to obtain sufficient cleaning. DO NOT pull cable with great force. Reverse drill and gradually work cable out.

(4.) Insert brush end of cable in burner inlet opening of cell, and proceed to clean 2 lower passes of cell in same manner as upper pass.

(5.) Repeat foregoing procedures until each cell in furnace has been cleaned.

(6.) Using vacuum cleaner, remove residue from each cell.

(7.) Using vacuum cleaner with soft brush attachment, clean burner assembly.

(8.) Clean flame sensor with fine steel wool.

(9.) Install NOx baffles (if removed).

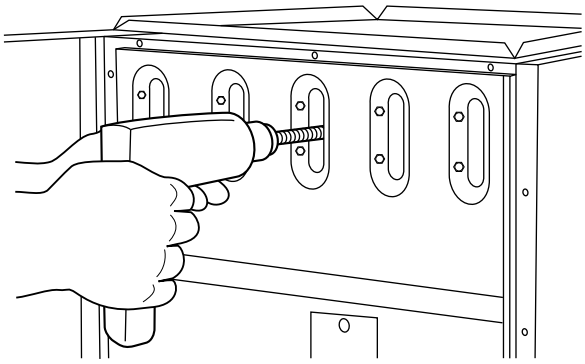

Fig. 57 - Cleaning Heat Exchanger Cell

(10.) Reinstall burner assembly. Center burners in cell openings.

10. Remove old sealant from cell panel and collector box flange.
11. Spray releasing agent on the heat exchanger cell panel where collector box assembly contacts cell panel.

NOTE: A releasing agent such as cooking spray or equivalent (must not contain corn or canola oil, aromatic or halogenated hydrocarbons or inadequate seal may occur) and RTV sealant (G.E. 162, 6702, or Dow-Corning 738) are needed before starting installation. DO NOT substitute any other type of RTV sealant. G.E. 162 (P771-9003) is available through RCD in 3-oz tubes.

12. Apply new sealant to flange of collector box and attach to cell panel using existing screws, making sure all screws are secure.

13. Reconnect wires to the following components (Use connection diagram on wiring label, if wires were not marked for reconnection locations.):
    a. Draft safeguard switch.
    b. Inducer motor.
    c. Pressure switches.
    d. Limit overtemperature switch.
    e. Gas valve.
    f. Hot surface igniter.
    g. Flame-sensing electrode.
    h. Flame rollout switches.
14. Reinstall internal vent pipe, if applicable.
15. Reinstall vent connector on furnace vent elbow. Securely fasten vent connector to vent elbow with 2 field-supplied, corrosion-resistant, sheet metal screws located 180° apart.
16. Replace blower access door only if it was removed.
17. Set thermostat above room temperature and check furnace for proper operation.
18. Verify blower airflow and speed changes between heating and cooling.

⚠ WARNING

FIRE OR EXPLOSION HAZARD

Failure to follow this warning could result in personal injury, death, and/or property damage.

Never purge a gas line into a combustion chamber. Never test for gas leaks with an open flame. Use a commercially available soap solution made specifically for the detection of leaks to check all connections. A fire or explosion may result causing property damage, personal injury or loss of life.

19. Check for gas leaks.

Sequence of Operation

NOTE: Furnace control must be grounded for proper operation or else control will lock out. Control is grounded through green/yellow wire routed to gas valve and burner box screw. Using the schematic diagram in Fig. 54, follow the sequence of operation through the different modes. Read and follow the wiring diagram very carefully.

NOTE: If a power interruption occurs during a call for heat (W/W1 or W/W1-and-W2), the control will start a 90-second blower-only ON period two seconds after power is restored, if the thermostat is still calling for gas heating. The amber LED light will flash code 12 during the 90-second period, after which the LED will be ON continuous, as long as no faults are detected. After the 90-second period, the furnace will respond to the thermostat normally.

The blower door must be installed for power to be conducted through the blower door interlock switch ILK to the furnace control CPU, transformer TRAN, inducer motor IDM, blower motor BLWM, hot-surface igniter HSI, and gas valve GV.

1. Two-Stage Heating (Adaptive Mode) with Single-Stage Thermostat
   See Fig. 27 - 34 for thermostat connections

NOTE: The low-heat only switch SW1-2 selects either the low-heat only operation mode when ON, (See Item 2. below) or the adaptive heating mode when OFF in response to a call for heat. (See Fig. 52.) When the W2 thermostat terminal is energized it will always cause high-heat operation when the R-to-W circuit is closed, regardless of the setting of the low-heat only switch. This furnace can operate as a two-stage furnace with a single-stage thermostat because the furnace control CPU includes a programmed adaptive sequence of controlled operation, which selects low-heat or high-heat operation. This selection is based upon the stored history of the length of previous gas-heating periods of the single-stage thermostat.

COOLING TONNAGE VS. AIRFLOW (CFM)

AIR CONDITIONING TONS (12,000 BTU/HR)	AIRFLOW (CFM)	070 MODEL	090 MODEL	110 and 135 MODELS
1-1/2	525	X_2	X_2	—
2	700	X	X	X
2-1/2	875	X	X	X_2
3	1050	X_1	X	X
3-1/2	1225	X	X_1	X
4	1400	—	X	X
5	1750	—	—	X_1
6	2100	—	—	X

X-INDICATES AN ALLOWABLE SELECTION.

BASED ON 350 CFM/TON (SETUP SWITCH SW1-5 OFF, SW4-3 OFF)

MODEL SIZE	SETUP SWITCH SW2 OR SW3 POSITIONS							
	OFF 1 2 3	OFF 1 2 3	OFF 1 2 3	OFF 1 2 3	OFF 1 2 3	OFF 1 2 3	OFF 1 2 3	OFF 1 2 3
070	DEF.	525_2	700	875	1050_1	1225	1225	1225
090	DEF.	525_2	700	875	1050	1225	1400_1	1400
110, 135	DEF.	700	875_2	1050	1225	1400	1750_1	2100

BASED ON 400 CFM/TON (SETUP SWITCH SW1-5 ON, SW4-3 OFF)

MODEL SIZE	SETUP SWITCH SW2 OR SW3 POSITIONS							
	OFF 1 2 3	OFF 1 2 3	OFF 1 2 3	OFF 1 2 3	OFF 1 2 3	OFF 1 2 3	OFF 1 2 3	OFF 1 2 3
070	DEF.	600_2	800	1000	1200_1	1400	1400	1400
090	DEF.	600_2	800	1000	1200	1400	1600_1	1600
110, 135	DEF.	800	1000_2	1200	1400	1600	2000_1	2200

BASED ON 325 CFM/TON (SETUP SWITCH SW1-5 OFF, SW4-3 ON)

MODEL SIZE	SETUP SWITCH SW2 OR SW3 POSITIONS							
	OFF 1 2 3	OFF 1 2 3	OFF 1 2 3	OFF 1 2 3	OFF 1 2 3	OFF 1 2 3	OFF 1 2 3	OFF 1 2 3
070	DEF.	488_2	651	814	976_1	1139	1139	1139
090	DEF.	488_2	651	814	976	1139	1302_1	1302
110, 135	DEF.	651	814_2	976	1139	1302	1627_1	1950

BASED ON 370 CFM/TON (SETUP SWITCH SW1-5 ON, SW4-3 ON)

MODEL SIZE	SETUP SWITCH SW2 OR SW3 POSITIONS							
	OFF 1 2 3	OFF 1 2 3	OFF 1 2 3	OFF 1 2 3	OFF 1 2 3	OFF 1 2 3	OFF 1 2 3	OFF 1 2 3
070	DEF.	558_2	744	930	1116_1	1302	1302	1302
090	DEF.	558_2	744	930	1116	1302	1488_1	1488
110, 135	DEF.	744	930_2	1116	1302	1488	1860_1	2200

1. DEFAULT A/C AIRFLOW WHEN A/C SWITCHES ARE IN OFF POSITION
2. DEFAULT CONT. FAN AIRFLOW WHEN CF SWITCHES ARE IN OFF POSITION
3. SWITCH POSITIONS ARE ALSO SHOWN ON FURNACE WIRING DIAGRAM

A12091

Fig. 58 - Cooling (A/C) or Continuous-Fan (CF) Airflow Selection Chart

The furnace will start up in either low- or high-heat. If the furnace starts up in low-heat, the control CPU determines the low-heat on-time (from 0 to 16 minutes) which is permitted before switching to high-heat.

If the power is interrupted, the stored history is erased and the control CPU will select low-heat for up to 16 minutes and then switch to high-heat, as long as the thermostat continues to call for heat. Subsequent selection is based on stored history of the thermostat cycle times.

The wall thermostat "calls for heat", closing the R-to-W circuit. The furnace control performs a self-check, verifies the low-heat and high-heat pressure switch contacts LPS and HPS are open, and starts the inducer motor IDM in high-speed.

a. **Inducer Prepurge Period**

(1.) If the furnace control CPU selects low-heat operation the inducer motor IDM comes up to speed, the low-heat pressure switch LPS closes, and the furnace control CPU begins a 15-second prepurge period. If the low-heat pressure switch LPS fails to remain closed the inducer motor IDM will remain running at high-speed. After the low-heat pressure switch re-closes the furnace control CPU

will begin a 15-second prepurge period, and continue to run the inducer motor IDM at high-speed.

(2.) If the furnace control CPU selects high-heat operation, the inducer motor IDM remains running at high-speed, and the high-heat pressure switch relay HPSR is de-energized to close the NC contact. When sufficient pressure is available the high-heat pressure switch HPS closes, and the high-heat gas valve solenoid GV-HI is energized. The furnace control CPU begins a 15-second prepurge period after the low-heat pressure switch LPS closes. If the high-heat pressure switch HPS fails to close and the low-heat pressure switch LPS closes, the furnace will operate at low-heat gas flow rate until the high-heat pressure switch closes for a maximum of 2 minutes after ignition.

b. **Igniter Warm-Up** -At the end of the prepurge period, the Hot-Surface Igniter HSI is energized for a 17-second igniter warm-up period.

c. **Trial-For-Ignition Sequence** -When the igniter warm-up period is completed the main gas valve relay contact GVR closes to energize the gas valve solenoid GV-M. The gas valve solenoid GV-M permits gas flow to the burners where it is ignited by the HSI. Five seconds after the GVR closes, a 2-second flame proving period begins. The HSI igniter will remain energized until the flame is sensed or until the 2-second flame proving period begins. If the furnace control CPU selects high-heat operation, the high-heat gas valve solenoid GV-HI is also energized.

d. **Flame-Proving** - When the burner flame is proved at the flame-proving sensor electrode FSE, the inducer motor IDM switches to low-speed unless the furnace is operating in high-heat, and the furnace control CPU begins the blower-ON delay period and continues to hold the gas valve GV-M open. If the burner flame is not proved within two seconds, the control CPU will close the gas valve GV-M, and the control CPU will repeat the ignition sequence for up to three more Trials-For-Ignition before going to Ignition-Lockout. Lockout will be reset automatically after three hours, or by momentarily interrupting 115 vac power to the furnace, or by interrupting 24 vac power at SEC1 or SEC2 to the furnace control CPU (not at W/W1, G, R, etc.). If flame is proved when flame should not be present, the furnace control CPU will lock out of Gas-Heating mode and operate the inducer motor IDM on high speed until flame is no longer proved.

e. **Blower-On delay** - If the burner flame is proven the blower-ON delays for low-heat and high-heat are as follows:
Low-heat - 45 seconds after the gas valve GV-M is opened the blower motor BLWM is turned ON at low-heat airflow.
High-heat - 25 seconds after the gas valve GV-M is opened the BLWM is turned ON at high-heat airflow. Simultaneously, the humidifier terminal HUM and electronic air cleaner terminal EAC-1 are energized and remain energized throughout the heating cycle.

f. **Switching from Low- to High-Heat** - If the furnace control CPU switches from low-heat to high-heat, the furnace control CPU will switch the inducer motor IDM speed from low to high. The high-heat pressure switch relay HPSR is de-energized to close the NC contact. When sufficient pressure is available the high-heat pressure switch HPS closes, and the high-heat gas valve solenoid GV-HI is energized. The blower motor BLWM will transition to high-heat airflow five seconds after the furnace control CPU switches from low-heat to high-heat.

g. **Switching from High- to Low-Heat** -The furnace control CPU will not switch from high-heat to low-heat while the thermostat R-to-W circuit is closed when using a single-stage thermostat.

h. **Blower-Off Delay** -When the thermostat is satisfied, the R to W circuit is opened, de-energizing the gas valve GV-M, stopping gas flow to the burners, and de-energizing the humidifier terminal HUM. The inducer motor IDM will remain energized for a 5-second post-purge period. The blower motor BLWM and air cleaner terminal EAC-1 will remain energized at low-heat airflow or transition to low-heat airflow for 90, 120, 150, or 180 seconds (depending on selection at blower-OFF delay switches). The furnace control CPU is factory-set for a 120-second blower-OFF delay.

2. **Two-Stage Thermostat and Two-Stage Heating**
See Fig. 27-34 for thermostat connections.

NOTE: In this mode the low-heat only switch SW1-2 must be ON to select the low-heat only operation mode in response to closing the thermostat R-to-W1 circuit. Closing the thermostat R-to- W1-and-W2 circuits always causes high-heat operation, regardless of the setting of the low-heat only switch.

The wall thermostat "calls for heat", closing the R-to-W1 circuit for low-heat or closing the R-to-W1-and-W2 circuits for high-heat. The furnace control performs a self-check, verifies the low-heat and high-heat pressure switch contacts LPS and HPS are open, and starts the inducer motor IDM in high-speed.

The start up and shut down functions and delays described in item 1. above apply to the 2-stage heating mode as well, except for switching from low- to high-Heat and vice versa.

a. **Switching from Low- to High-Heat** - If the thermostat R-to-W1 circuit is closed and the R-to-W2 circuit closes, the furnace control CPU will switch the inducer motor IDM speed from low to high. The high-heat pressure switch relay HPSR is de-energized to close the NC contact. When sufficient pressure is available the high-heat pressure switch HPS closes, and the high-heat gas valve solenoid GV-HI is energized. The blower motor BLWM will transition to high-heat airflow five seconds after the R-to-W2 circuit closes.

b. **Switching from High- to Low-Heat** -If the thermostat R-to- W2 circuit opens, and the R-to-W1 circuit remains closed, the furnace control CPU will switch the inducer motor IDM speed from high to low. The high-heat pressure switch relay HPSR is energized to open the NC contact and de-energize the high-heat gas valve solenoid GV-HI. When the inducer motor IDM reduces pressure sufficiently, the high-heat pressure switch HPS will open. The gas valve solenoid GV-M will remain energized as long as the low-heat pressure switch LPS remains closed. The blower motor BLWM will transition to low-heat airflow five seconds after the R-to-W2 circuit opens.

3. **Cooling mode**
The thermostat "calls for cooling".

a. **Single-Speed Cooling-**
See Fig. 27 for thermostat connections
The thermostat closes the R-to-G-and-Y circuits. The R-to- Y circuit starts the outdoor unit, and the R-to-G-and-Y/Y2 circuits start the furnace blower motor BLWM on cooling airflow. Cooling airflow is based

PG8MVA

on the A/C selection shown in Fig. 58. The electronic air cleaner terminal EAC-1 is energized with 115 vac when the blower motor BLWM is operating.
When the thermostat is satisfied, the R-to-G-and-Y circuits are opened. The outdoor unit will stop, and the furnace blower motor BLWM will continue operating at cooling airflow for an additional 90 seconds. Jumper Y/Y2 to DHUM to reduce the cooling off-delay to 5 seconds. (See Fig. 26.)

b. **Single-Stage Thermostat and Two-Speed Cooling (Adaptive Mode) -**
See Fig. 34 for thermostat connections.
This furnace can operate a two-speed cooling unit with a single-stage thermostat because the furnace control CPU includes a programmed adaptive sequence of controlled operation, which selects low-cooling or high-cooling operation. This selection is based upon the stored history of the length of previous cooling period of the single-stage thermostat.

PG8MVA

NOTE: The air conditioning relay disable jumper ACRDJ must be connected to enable the adaptive cooling mode in response to a call for cooling. (See Fig. 26.) When ACRDJ is in place the furnace control CPU can turn on the air conditioning relay ACR to energize the Y/Y2 terminal and switch the outdoor unit to high-cooling.
The furnace control CPU can start up the cooling unit in either low- or high-cooling. If starting up in low-cooling, the furnace control CPU determines the low-cooling on-time (from 0 to 20 minutes) which is permitted before switching to high-cooling. If the power is interrupted, the stored history is erased and the furnace control CPU will select low-cooling for up to 20 minutes and then energize the air conditioning relay ACR to energize the Y/Y2 terminal and switch the outdoor unit to high-cooling, as long as the thermostat continues to call for cooling. Subsequent selection is based on stored history of the thermostat cycle times.
The wall thermostat "calls for cooling", closing the R-to-G-and-Y circuits. The R-to-Y1 circuit starts the outdoor unit on low-cooling speed, and the R-to-G-and-Y1 circuits starts the furnace blower motor BLWM at low-cooling airflow which is the true on-board CF selection as shown in Fig. 58.
If the furnace control CPU switches from low-cooling to high-cooling, the furnace control CPU will energize the air conditioning relay ACR. When the air conditioning relay ACR is energized the R-to-Y1-and-Y2 circuits switch the outdoor unit to high-cooling speed, and the R-to-G-and-Y1-and-Y/Y2 circuits transition the furnace blower motor BLWM to high-cooling airflow. High-cooling airflow is based on the A/C selection shown in Fig. 58.

NOTE: When transitioning from low-cooling to high-cooling the outdoor unit compressor will shut down for 1 minute while the furnace blower motor BLWM transitions to run at high-cooling airflow.
The electronic air cleaner terminal EAC-1 is energized with 115 vac whenever the blower motor BLWM is operating.
When the thermostat is satisfied, the R-to-G-and-Y circuit are opened. The outdoor unit stops, and the furnace blower BLWM and electronic air cleaner terminal EAC-1 will remain energized for an additional 90 seconds. Jumper Y1 to DHUM to reduce the cooling off-delay to 5 seconds. (See Fig. 26.)

c. Two-Stage Thermostat and Two-Speed Cooling
See Fig. 33 for thermostat connections

NOTE: The air conditioning relay disable jumper ACRDJ must be disconnected to allow thermostat control of the outdoor unit staging. (See Fig. 26.)

The thermostat closes the R-to-G-and-Y1 circuits for low-cooling or closes the R-to-G-and-Y1-and-Y2 circuits for high-cooling. The R-to-Y1 circuit starts the outdoor unit on low-cooling speed, and the R-to-G-and-Y1 circuit starts the furnace blower motor BLWM at low-cooling airflow which is the true on-board CF (continuous fan) selection as shown in Fig. 56. The R-to-Y1-and-Y2 circuits start the outdoor unit on high-cooling speed, and the R-to- G-and-Y/Y2 circuits start the furnace blower motor BLWM at high-cooling airflow. High-cooling airflow is based on the A/C (air conditioning) selection shown in Fig. 58.
The electronic air cleaner terminal EAC-1 is energized with 115 vac whenever the blower motor BLWM is operating.
When the thermostat is satisfied, the R-to-G-and-Y1 or R-to-G-and-Y1-and-Y2 circuits are opened. The outdoor unit stops, and the furnace blower BLWM and electronic air cleaner terminal EAC-1 will remain energized for an additional 90 seconds. Jumper Y1 to DHUM to reduce the cooling off-delay to 5 seconds. (See Fig. 26.)

4. **Dehumidification Mode**
See Fig. 27-29 for thermostat connections.
The dehumidification output, DHUM on the humidity sensing thermostat should be connected to the furnace control thermostat terminal DHUM. When there is a dehumidify demand, the DHUM input is activated, which means 24 vac signal is removed from the DHUM input terminal. In other words, the DHUM input logic is reversed. The DHUM input is turned ON when no dehumidify demand exists. Once 24 vac is detected by the furnace control on the DHUM input, the furnace control operates in dehumidification mode. If the DHUM input is low for more than 48 hours, the furnace control reverts back to non-dehumidification mode.
The cooling operation described in item 3. above also applies to operation with a humidity sensing thermostat. The exceptions are listed below:
   a. **Low cooling**-When the R-to-G-and-Y1 circuit is closed and there is a demand for dehumidification, the furnace blower motor BLWM will drop the blower airflow to 86 percent of low-cooling airflow which is the true on-board CF (continuous fan) selection as shown in Fig. 56.
   b. **High cooling**-When the R-to-G-and Y/Y2 circuit is closed and there is a demand for dehumidification, the furnace blower motor BLWM will drop the blower airflow to 86 percent of high-cooling airflow. High-cooling airflow is based on the A/C (air conditioning) selection shown in Fig. 56.
   c. **Cooling off-delay**-When the "call for cooling" is satisfied and there is a demand for dehumidification, the cooling blower-off delay is decreased from 90 seconds to 5 seconds.

5. **Super-Dehumidify Mode**
Super-Dehumidify mode can only be entered if the furnace control is in the dehumidification mode and there is a demand for dehumidification. The cooling operation described in item 3. above also applies to operation with a humidity sensing thermostat. The exceptions are listed below:
   a. When the R-to-Y1 circuit is closed, R-to-G circuit is open, and there is a demand for dehumidification, the furnace blower motor BLWM will drop the blower airflow to 65 percent of low-cooling airflow for a maximum of 10 minutes each cooling cycle or until the R-to-G circuit closes or the demand for dehumidification is satisfied. Low-cooling airflow is the true on-board CF (continuous fan) selection as shown in Fig. 58.
   b. When the R-to-Y/Y2 circuit is closed, R-to-G circuit is open, and there is a demand for dehumidification,

the furnace blower motor BLWM will drop the blower airflow to 65 percent of high-cooling airflow for a maximum of 10 minutes each cooling cycle or until the R-to-G circuit closes or the demand for dehumidification is satisfied. High-cooling airflow is based on the A/C (air conditioning) selection shown in Fig. 58.

c. When the "call for cooling" is satisfied and there is a demand for dehumidification, the cooling blower-off delay is decreased from 90 seconds to 5 seconds.

6. **Continuous Blower Mode**

When the R-to-G circuit is closed by the thermostat, the blower motor BLWM will operate at continuous blower airflow. Continuous blower airflow selection is initially based on the CF (continuous fan) selection shown in Fig. 58. Factory default is shown in Fig. 58. Terminal EAC-1 is energized as long as the blower motor BLWM is energized.

During a call for heat, the furnace control CPU will transition the blower motor BLWM to continuous blower airflow, low-heat airflow, or the mid-range airflow, whichever is lowest. The blower motor BLWM will remain ON until the main burners ignite then shut OFF and remain OFF for the blower-ON delay (45 seconds in low-heat, and 25 seconds in high-heat), allowing the furnace heat exchangers to heat up more quickly, then restarts at the end of the blower-ON delay period at low-heat or high-heat airflow, respectively.

The blower motor BLWM will revert to continuous-blower airflow after the heating cycle is completed. In high-heat, the furnace control CPU will drop the blower motor BLWM to low-heat airflow during the selected blower-OFF delay period before transitioning to continuous-blower airflow.

When the thermostat "calls for low-cooling", the blower motor BLWM will switch to operate at low-cooling airflow. When the thermostat is satisfied, the blower motor BLWM will operate an additional 90 seconds at low-cooling airflow before transitioning back to continuous-blower airflow.

When the thermostat "calls for high-cooling", the blower motor BLWM will operate at high cooling airflow. When the thermostat is satisfied, the blower motor BLWM will operate an additional 90 seconds at high-cooling airflow before transitioning back to continuous-blower airflow. When the R-to-G circuit is opened, the blower motor BLWM will continue operating for an additional 5 seconds, if no other function requires blower motor BLWM operation.

Continuous Blower Speed Selection from Thermostat

To select different continuous-blower airflow from the room thermostat, momentarily turn off the FAN switch or push button on the room thermostat for 1-3 seconds after the blower motor BLWM is operating. The furnace control CPU will shift the continuous-blower airflow from the factory setting to the next highest CF selection airflow as shown in Fig. 58. Momentarily turning off the FAN switch again at the thermostat will shift the continuous-blower airflow up one more increment. If you repeat this procedure enough you will eventually shift the continuous-blower airflow to the lowest CF selection as shown in Fig. 58. The selection can be changed as many times as desired and is stored in the memory to be automatically used following a power interruption.

NOTE: If the blower-off delay is set to the maximum, the adjustable continuous-fan feature is locked (i.e., fan speed cannot be changed from its current setting).

7. **Heat pump**

See Fig. 29 - 32 for thermostat connections.

When installed with a heat pump, the furnace control automatically changes the timing sequence to avoid long blower off times during demand defrost cycles. Whenever W/W1 is energized along with Y1 or Y/Y2, the furnace control CPU will transition to or bring on the blower motor BLWM at cooling airflow, low-heat airflow, or the mid-range airflow, whichever is lowest. The blower motor BLWM will remain on until the main burners ignite then shut OFF and remain OFF for 25 seconds before coming back on at heating airflow. When the W/W1 input signal disappears, the furnace control begins a normal inducer post-purge period while changing the blower airflow. If Y/Y2 input is still energized the furnace control CPU will transition the blower motor BLWM airflow to cooling airflow. If Y/Y2 input signal disappears and the Y1 input is still energized the furnace control CPU will transition the blower motor BLWM to low-cooling airflow. If both the Y1 and Y/Y2 signals disappear at the same time, the blower motor BLWM will remain on at low-heat airflow for the selected blower-OFF delay period. At the end of the blower- OFF delay, the blower motor BLWM will shut OFF unless G is still energized, in which case the blower motor BLWM will operate at continuous blower airflow.

8. **Component test**

The furnace features a component test system to help diagnose a system problem in the case of a component failure. To initiate the component test procedure, ensure that there are no thermostat inputs to the control and all time delays have expired. Turn on setup switch SW1-6. (See Fig. 26.)

NOTE: The component test feature will not operate if the control is receiving any thermostat signals or until all time delays have expired.

The component test sequence is as follows:

a. The furnace control CPU turns the inducer motor ON at high-heat speed and keeps it ON through step c.

b. After waiting 10 seconds the furnace control CPU turns the hot surface igniter ON for 15 seconds, then OFF.

c. The furnace control CPU then turns the blower motor BLWM on at mid-range airflow for 15 seconds, then OFF.

d. After shutting the blower motor OFF the furnace control CPU switches the inducer to low-heat speed for 10 seconds, then OFF.

NOTE: The EAC terminals are energized when the blower is operating.

After the component test is completed, 1 or more status codes (11, 25, or 41) will flash. See component test section or Service Label (Fig. 53) for explanation of status codes.

NOTE: To repeat component test, turn setup switch SW1-6 to OFF and then back ON.

Wiring Diagram

Refer to wiring diagram Fig. 54.

Troubleshooting

Refer to the service label. (See Fig. 53—Service Label.)

The Troubleshooting Guide (See Fig. 59.) can be a useful tool in isolating furnace operation problems. Beginning with the word "Start," answer each question and follow the appropriate arrow to the next item.

The Guide will help to identify the problem or failed component. After replacing any component, verify correct operation sequence.

A more detailed Troubleshooting Guide is available from your distributor.

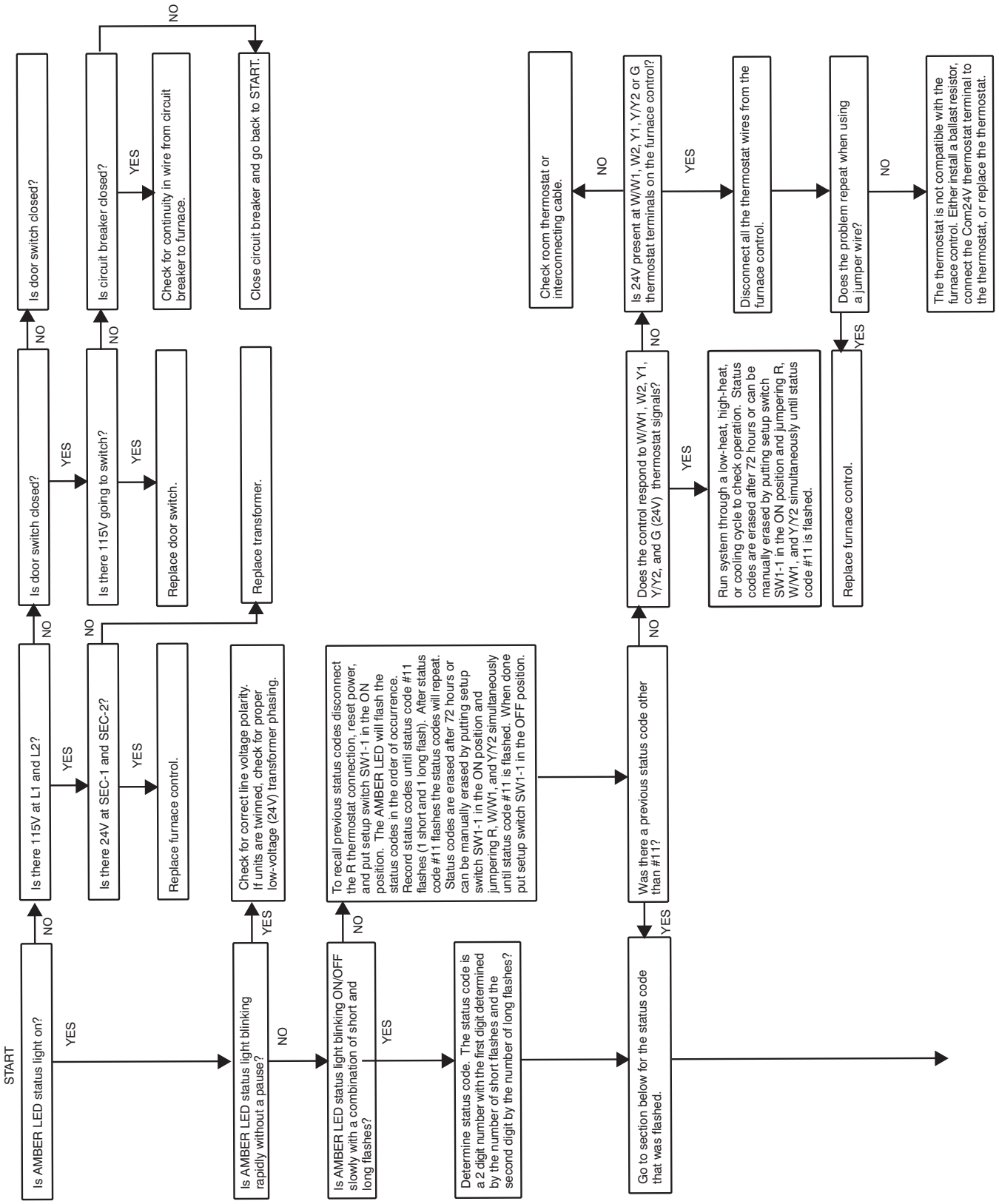

Fig. 59 - Troubleshooting Guide

11 NO PREVIOUS CODE – Status codes are erased after 72 hours or can be manually erased by putting setup switch SW1-1 in the ON position and jumpering R, W/W1, and Y/Y2 simultaneously until status code #11 is flashed. Run system through a low-heat, high-heat, or cooling cycle to check system.

12 BLOWER ON AFTER POWER UP – (115V OR 24V) – Normal operation. Blower runs for 90 seconds, if unit is powered up during a call for heat (R-W/W1 closed) or when (R-W/W1 opens) during the blower on-delay period.

13 LIMIT CIRCUIT LOCKOUT – Lockout occurs if the limit, draft safeguard, flame rollout, or blocked vent switch* (if used) is open longer than 3 minutes or 10 successive limit trips occurred during high-heat. Control will auto-reset after 3 hours. See code 33.

14 IGNITION LOCKOUT – System failed to ignite gas and prove flame in 4 attempts. Control will auto-reset after 3 hours. See status code 34.

15 BLOWER MOTOR LOCKOUT – Indicates the blower failed to reach 250 RPM or the blower failed to communicate within 30 seconds after being turned ON in two successive heating cycles. Control will auto-reset after 3 hours. See code 41.

21 GAS HEATING LOCKOUT – Turn off power and wait 5 minutes to retry. Check for:
- Stuck closed gas valve relay on control.
- Miswire or short to gas valve wire.

22 ABNORMAL FLAME-PROVING SIGNAL Flame is proved while gas valve is de-energized. Inducer will run until fault is cleared. Check for:
- Stuck open or leaky gas valve.

23 PRESSURE SWITCH DID NOT OPEN Check for:
- Obstructed pressure tube.
- Pressure switch stuck closed.

24 SECONDARY VOLTAGE FUSE IS OPEN Check for:
- Short circuit in secondary voltage (24V) wiring including thermostat leads. Disconnect thermostat leads to isolate short circuit.

32 LOW-HEAT PRESSURE SWITCH DID NOT CLOSE OR REOPENED – If open longer than 5 minutes, inducer shuts off for 15 minutes before retry. If opens during blower on-delay period, blower will come on for the selected blower off-delay. Check for:
- Proper vent sizing.
- Low inducer voltage (115V).
- Low inlet gas pressure (if LGPS used).
- Inadequate combustion air supply.
- Disconnected or obstructed pressure tubing.
- Defective inducer motor.
- Defective pressure switch.
- Excessive wind.
- Restricted vent.

33 LIMIT CIRCUIT FAULT – Indicates the limit, draft safeguard, flame rollout, or blocked vent switch* (if used) is open or the furnace is operating in high-heat only mode due to 2 successive low-heat limit trips. Blower will run for 4 min. or until open switch remakes whichever is longer. If open longer than 3 min., code changes to lockout #13. If open less than 3 min. status code #33 continues to flash until blower shuts off. Flame rollout switch and BVSS requires manual reset. Check for:
- Dirty filter or restricted duct system.
- Loose blower wheel.
- Defective switch or connections.
- Inadequate combustion air supply (flame rollout switch open).
- Restricted vent.
- Proper vent sizing.
- Excessive wind.

34 IGNITION PROVING FAILURE – If flame is not sensed during the trial for ignition period, the control will repeat the ignition sequence 3 more times before lockout #14 occurs. If flame signal is lost during the blower on-delay period, blower will come on for the selected blower off-delay. Check the following items first before proceeding to the next step.
- Gas valve turned off.
- Manual shut-off valve.
- Green/Yellow wire MUST be connected to furnace sheet metal.
- Flame sensor must not be grounded.

To determine whether the problem is in the gas valve, igniter, or flame sensor the system can be operated in component test mode. To check the igniter remove the R thermostat connection from the control, reset power, and put setup switch SW1-6 in the ON position to start the component test. Does the igniter glow orange/white by the end of the 15 second warm-up period?

NO → Unplug igniter harness from control and repeat component test by turning setup switch SW1-6 OFF and then back ON. Check for 115V between pin 3 and NEUTRAL-L2 on the control. Was 115V present for the 15 second period?
- NO → Replace furnace control.
- YES → Check for continuity in the harness and igniter. Replace defective component.

YES → Reconnect the R thermostat lead and set thermostat to call for heat. Connect voltmeter across gas valve connections. Does gas valve receive 24V?
- NO → Check connections. If OK, replace control.
- YES → Does gas valve open and allow gas to flow?
  - NO → Check that all gas valves are turned on. Replace valve.
  - YES → Do the main burners ignite?
    - NO → Check for:
      - Inadequate flame carryover or rough ignition.
      - Low inlet gas pressure.
      - Proper firing rate.
      - Blocked or incorrect carry- over gap. (.045" nominal)
    - YES → Do the main burners stay on?
      - YES → Allow blower to come on and repeat test to check for intermittent operation.
      - NO → Repeat call for heat and check flame sensor current during trial for ignition period. Is the DC microamps below 0.5?
        - NO → Check connections and retry. If current is near typical value (4.0-6.0 nominal) and burners will not stay on, repeat check in high-heat. If burners will still not stay on replace control. If burners operate in high-heat then switch to low-heat,check manifold pressure. If OK, check burner carryover and flame sensor location.
        - YES → Clean flame sensor with fine steel wool and recheck current. Nominal current is 4.0 to 6.0 microamps.
          - Is current near typical value?
            - NO → Replace electrode.
            - YES → Will main burners ignite and stay on?
              - NO → Replace furnace control.
              - YES → Fixed.

43 LOW-HEAT PRESSURE SWITCH OPEN WHILE HIGH-HEAT PRESSURE SWITCH IS CLOSED - Check for:
- Low-heat pressure switch stuck open.
- Disconnected or obstructed pressure tube.
- Miswired pressure switches.
- Low inlet gas pressure (if LGPS used).

45 CONTROL CIRCUITRY LOCKOUT Auto-reset after 1 hour lockout due to:
- Flame circuit failure.
- Gas valve relay stuck open.
- Software check error.

Reset power to clear lockout. Replace control if code repeats.

* Blocked vent switch used in Chimney Adapter Kit

PG8MVA

A02108B

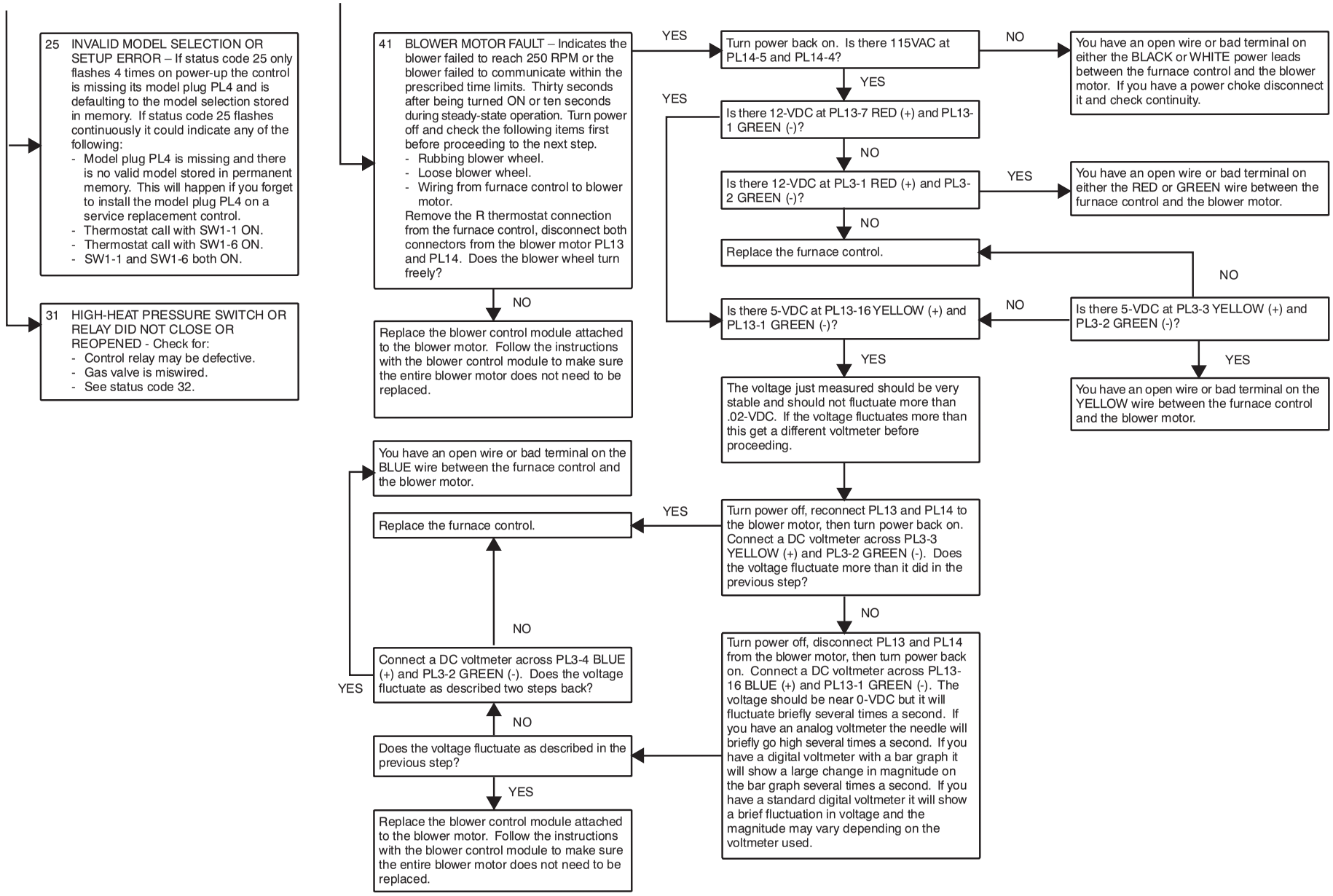
25 INVALID MODEL SELECTION OR SETUP ERROR – If status code 25 only flashes 4 times on power-up the control is missing its model plug PL4 and is defaulting to the model selection stored in memory. If status code 25 flashes continuously it could indicate any of the following:
- Model plug PL4 is missing and there is no valid model stored in permanent memory. This will happen if you forget to install the model plug PL4 on a service replacement control.
- Thermostat call with SW1-1 ON.
- Thermostat call with SW1-6 ON.
- SW1-1 and SW1-6 both ON.
31 HIGH-HEAT PRESSURE SWITCH OR RELAY DID NOT CLOSE OR REOPENED - Check for:
- Control relay may be defective.
- Gas valve is miswired.
- See status code 32.
41 BLOWER MOTOR FAULT – Indicates the blower failed to reach 250 RPM or the blower failed to communicate within the prescribed time limits. Thirty seconds after being turned ON or ten seconds during steady-state operation. Turn power off and check the following items first before proceeding to the next step.
- Rubbing blower wheel.
- Loose blower wheel.
- Wiring from furnace control to blower motor.
Remove the R thermostat connection from the furnace control, disconnect both connectors from the blower motor PL13 and PL14. Does the blower wheel turn freely?
NO
Replace the blower control module attached to the blower motor. Follow the instructions with the blower control module to make sure the entire blower motor does not need to be replaced.
YES
Turn power back on. Is there 115VAC at PL14-5 and PL14-4?
NO
You have an open wire or bad terminal on either the BLACK or WHITE power leads between the furnace control and the blower motor. If you have a power choke disconnect it and check continuity.
YES
Is there 12-VDC at PL13-7 RED (+) and PL13-1 GREEN (-)?
YES
NO
Is there 12-VDC at PL3-1 RED (+) and PL3-2 GREEN (-)?
YES
You have an open wire or bad terminal on either the RED or GREEN wire between the furnace control and the blower motor.
NO
Replace the furnace control.
Is there 5-VDC at PL13-16 YELLOW (+) and PL13-1 GREEN (-)?
NO
Is there 5-VDC at PL3-3 YELLOW (+) and PL3-2 GREEN (-)?
NO
YES
You have an open wire or bad terminal on the YELLOW wire between the furnace control and the blower motor.
YES
The voltage just measured should be very stable and should not fluctuate more than .02-VDC. If the voltage fluctuates more than this get a different voltmeter before proceeding.
Turn power off, reconnect PL13 and PL14 to the blower motor, then turn power back on. Connect a DC voltmeter across PL3-3 YELLOW (+) and PL3-2 GREEN (-). Does the voltage fluctuate more than it did in the previous step?
YES
Replace the furnace control.
NO
Turn power off, disconnect PL13 and PL14 from the blower motor, then turn power back on. Connect a DC voltmeter across PL13-16 BLUE (+) and PL13-1 GREEN (-). The voltage should be near 0-VDC but it will fluctuate briefly several times a second. If you have an analog voltmeter the needle will briefly go high several times a second. If you have a digital voltmeter with a bar graph it will show a large change in magnitude on the bar graph several times a second. If you have a standard digital voltmeter it will show a brief fluctuation in voltage and the magnitude may vary depending on the voltmeter used.
Does the voltage fluctuate as described in the previous step?
NO
YES
Replace the blower control module attached to the blower motor. Follow the instructions with the blower control module to make sure the entire blower motor does not need to be replaced.
Connect a DC voltmeter across PL3-4 BLUE (+) and PL3-2 GREEN (-). Does the voltage fluctuate as described two steps back?
YES
You have an open wire or bad terminal on the BLUE wire between the furnace control and the blower motor.
NO
Replace the furnace control.

Table 15 – Accessory List

DESCRIPTION	PART NUMBER	NOTES
Media Filter Cabinet	FILCABXX0016	Filter cabinet 16” (406 mm) for 4” (102 mm) wide filter
	FILCABXX0020	Filter cabinet 20” (508 mm) for 4” (102 mm) wide filter
	FILCABXX0024	Filter cabinet 24” (610 mm) for 4” (102 mm) wide filter
Cartridge Media Filter	FILXXCAR0016	Filter Cartridge replacements for FILCAB media cabinet
	FILXXCAR0020	Filter Cartridge replacements for FILCAB media cabinet
	FILXXCAR0024	Filter Cartridge replacements for FILCAB media cabinet
EZ Flex Media Filter with End Caps	EXPXXUNV0016	16” (406 mm) Replacement Expandable Filter assembly
	EXPXXUNV0020	20” (508 mm) Replacement Expandable Filter assembly
	EXPXXUNV0024	24” (610 mm) Replacement Expandable Filter assembly
Replacement EZ Flex Filter Media	EXPXXFIL0016	16” (406 mm) Replacement filter for EXPUNV assembly
	EXPXXFIL0020	20” (508 mm) Replacement filter for EXPUNV assembly
	EXPXXFIL0024	24” (610 mm) Replacement filter for EXPUNV assembly
External Bottom Return Filter Rack	KGAFR0401B14	Bottom return filter rack 14” (356 mm) casing
	KGAFR0501B17	Bottom return filter rack 17” (432 mm) casing
	KGAFR0601B21	Bottom return filter rack 21” (533 mm) casing
	KGAFR0701B24	Bottom return filter rack 24” (610 mm) casing
External Side Return Filter Rack	KGAFR0801SRE	Ext. Side filter rack– all casings– includes filter
Unframed Filter 3/4–in. (19 mm)	KGAWF1301UFR†	(1) unframed filter 16x25x3/4 (406x635x19 mm)
	KGAWF1401UFR	(1) unframed filter 20x25x3/4 (508x635x19 mm)
	KGAWF1501UFR	(1) unframed filter 24x25x3/4 (610x635x19 mm)
	KGAWF1306UFR†	(6) unframed filter 16x25x3/4 (406x635x19 mm)
	KGAWF1406UFR	(6) unframed filter 20x25x3/4 (508x635x19 mm)
	KGAWF1506UFR	(6) unframed filter 24x25x3/4 (610x635x19 mm)
Flue Extension	KGAFE0112UPH	(12) vent extension 4” (102 mm) dia. x 3–1/2” (89 mm)
*Twinning Kit	KGATW0601HSI	Single or two stage PSC equipped units only
Combustible Floor Base	KGASB0201ALL	Adjustable floor base – fits all casing sizes
Downflow Vent Guard	KGBVG0101DFG	Vent flue shield – downflow venting outside casing
Vent Extension Kit	KGAVE0101DNH	Downflow, through casing vent extension
Chimney Adapter Kit	KGACA02014FC	Masonry chimney adapter 4” (102 mm)
	KGACA02015FC	Masonry chimney adapter 5” (127 mm)
Natural–to–Propane Conversion Kit	KGANP5201VSP	Gas conversion natural to propane all
Propane–to–Natural Conversion Kit	KGAPN4401VSP	Gas conversion propane to natural all
Label Kit	KGALB0101KIT	Downflow orientation label replacement
**ECM Motor Simulator	KGASD0301FMS	ECM blower and inducer simulator – variable speed units
**Advanced Product Monitor	KGAFP0301APM	PC software and hardware for Troubleshooting variable speed units

* Not for ECM or variable–speed ECM models
** Variable–speed ECM models only

PARTS REPLACEMENT INFORMATION GUIDE

PG8MVA

CASING GROUP

Outer door
Blower door
Top filler plate
Bottom filler plate
Bottom enclosure

ELECTRICAL GROUP

Control bracket
Junction box
Limit switch(es)
Circuit board
Door switch
Transformer
Wiring harness 115v
Wiring harness 24v

BLOWER GROUP

Blower housing
Blower cutoff
Blower motor
Blower wheel
Capacitor (where used)
Capacitor strap (where used)
Grommet
Power choke (where used)

GAS CONTROL GROUP

Manifold
Burner assembly
Orifice
Flame sensor
Hot surface igniter
Gas valve
Manual reset limit switches
Burner support assembly

HEAT EXCHANGER GROUP

Heat exchanger cell
Cell panel
Lox NOx baffle (California models only)

INDUCER GROUP

Housing assembly
Pressure switch
Inducer motor
Inducer wheel
Vent elbow assembly
Draft safeguard switch

TO OBTAIN INFORMATION ON PARTS: Consult your installing dealer or classified section of your local telephone directory under "Heating Equipment" or "Air Conditioning Contractors and Systems" headings for dealer listing by brand name or contact:

PAYNE HEATING & COOLING
Consumer Relations Department
P.O. Box 4952
Syracuse, New York 13221-4952
1-800-417-2963

Have available the model number, series number, and serial number located on the unit rating plate to ensure correct replacement part.

Example of Model Number

MODEL	ELECTRICAL SUPPLY	MAJOR SERIES	COOLING SIZE	HEATING SIZE	VARIATION	MINOR SERIES	VARIATION
PG8M	V	A	036	070	A	B	JA

WARNING: Improper installation, adjustment, alteration, service, or maintenance can cause personal injury, property damage, or death. Consult a qualified installer, service agency, or your local gas supplier for information or assistance. The qualified installer or service agency must use only factory-authorized replacement parts, kits, or accessories when modifying this product.

Copyright 2012 Payne Heating & Cooling Systems 7310 W. Morris St. Indianapolis, IN 46231 Printed in U.S.A. Edition Date: 02/12
Catalog No. IM–PG8MVA–01
Manufacturer reserves the right to discontinue, or change at any time, specifications or designs without notice and without incurring obligations.
Replaces: New