PG9YAB

DIRECT OR NON–DIRECT VENT
4–WAY MULTIPOISE
CONDENSING GAS FURNACE

Installation Instructions

SPECIAL VENTING REQUIREMENTS FOR INSTALLATIONS IN CANADA

Installation in Canada must conform to the requirements of CSA B149 code. Vent systems **must** be composed of pipe, fittings, cements, and primers listed to ULC S636. The special vent fittings and accessory concentric vent termination kits and accessory external drain trap have been certified to ULC S636 for use with those Royal Pipe and IPEX PVC vent components which have been certified to this standard. In Canada, the primer and cement must be of the same manufacturer as the vent system – GVS-65 Primer (Purple) for Royal Pipe or IPEX System 636, PVC/CPVC Primer, Purple Violet for Flue Gas Venting and GVS-65 PVC Solvent Cement for Royal Pipe or IPEX System $636_{(1)}$t, PVC Cement for Flue Gas Venting, rated Class IIA, 65 deg C. must be used with this venting system - do not mix primers and cements from one manufacturer with a vent system from a different manufacturer. Follow the manufacturer's instructions in the use of primer and cement and never use primer or cement beyond its expiration date.

The safe operation, as defined by ULC S636, of the vent system is based on following these installation instructions, the vent system manufacturer's installation instructions, and proper use of primer and cement. All fire stop and roof flashing used with this system must be UL listed material. Acceptability under Canadian standard CSA B149 is dependent upon full compliance with all installation instructions. Under this standard, it is recommended that the vent system be checked once a year by qualified service personnel.

The authority having jurisdiction (gas inspection authority, municipal building department, fire department, etc) should be consulted before installation to determine the need to obtain a permit.

*IPEX System 636™ is a trademark of IPEX Inc.

CONSIGNES SPÉCIALES POUR L'INSTALLATION DE VENTILLATION AU CANADA

L'installation faite au Canada doit se conformer aux exigences du code CSA B149. Ce systême de ventillation **doit** se composer de tuyaux, raccords, ciments et apprêts conformes au ULC S636. La tuyauterie de ventillation des gaz, ses accessoires, le terminal concentrique mural ainsi que l'ensemble du drain de condensat extérieur ont été certifiés ULCS 636 pour l'application des composantes Royal Pipe, IPEX PVC qui sont certifiées à ce standard. Au Canada, l'apprêt et le ciment doivent être du même fabricant que le système d'évacuation. L'apprêt GVS-65 (Purple) et le ciment-solvant GVS-65 doivent être utilisé avec les Royal Pipe. Système IPEX 636, apprêt PVC/CPVC, Purple pour évacuation des gaz de combustion et système IPEX 636(1)t, ciment PVC pour évacuation des gaz de combustion, coté classe IIA, 65 deg C. doivent être utilisés avec le système d'évacuation IPEX 636 – Ne pas combiner l 'apprêt et le ciment d'un manufacturier avec un système d'évacuation d'un manufacturier différent.

Bien suivre les indications du manufacturier lors de l'utilisation de l'apprêt et du ciment et ne pas utiliser ceux-ci si la date d'expiration est atteinte.

L'opération sécuritaire, tel que définit par ULC S636, du système de ventilation est basé sur les instructions d'installation suivantes, ainsi que l'usage approprié de l'apprêt et ciment. Tout arrët feu et solin de toit utilisés avec ce système doivent être des matériaux listés UL. L'acceptation du standard Canadien CSA B419 est directement relié à l'installation conforme aux instructions ci-haut mentionnées. Le standard Canadien recommande l' inspection par un personel qualifié et ce, une fois par année.

Les autoritées ayant juridiction (inspecteurs de gas, inspecteurs en bâtiments, département des incendies, etc) devraient être consultées avant l'installation afin de déterminer si un permis est requis.

PG9YAB

IMPORTANT

The Commonwealth of Massachusetts requires compliance with regulation 248 CMR as follows:

5.08: Modifications to NFPA-54, Chapter 10

2) Revise 10.8.3 by adding the following additional requirements:

a. For all side wall horizontally vented gas fueled equipment installed in every dwelling, building or structure used in whole or in part for residential purposes, including those owned or operated by the Commonwealth and where the side wall exhaust vent termination is less than seven (7) feet above finished grade in the area of the venting, including but not limited to decks and porches, the following requirements shall be satisfied:

1. INSTALLATION OF CARBON MONOXIDE DETECTORS. At the time of installation of the side wall horizontal vented gas fueled equipment, the installing plumber or gasfitter shall observe that a hard wired carbon monoxide detector with an alarm and battery back-up is installed on the floor level where the gas equipment is to be installed. In addition, the installing plumber or gasfitter shall observe that a battery operated or hard wired carbon monoxide detector with an alarm is installed on each additional level of the dwelling, building or structure served by the side wall horizontal vented gas fueled equipment. It shall be the responsibility of the property owner to secure the services of qualified licensed professionals for the installation of hard wired carbon monoxide detectors

   a. In the event that the side wall horizontally vented gas fueled equipment is installed in a crawl space or an attic, the hard wired carbon monoxide detector with alarm and battery back-up may be installed on the next adjacent floor level.

   b. In the event that the requirements of this subdivision can not be met at the time of completion of installation, the owner shall have a period of thirty (30) days to comply with the above requirements; provided, however, that during said thirty (30) day period, a battery operated carbon monoxide detector with an alarm shall be installed.

2. APPROVED CARBON MONOXIDE DETECTORS. Each carbon monoxide detector as required in accordance with the above provisions shall comply with NFPA 720 and be ANSI/UL 2034 listed and IAS certified.

3. SIGNAGE. A metal or plastic identification plate shall be permanently mounted to the exterior of the building at a minimum height of eight (8) feet above grade directly in line with the exhaust vent terminal for the horizontally vented gas fueled heating appliance or equipment. The sign shall read, in print size no less than one-half (1/2) inch in size, ”GAS VENT DIRECTLY BELOW. KEEP CLEAR OF ALL OBSTRUCTIONS”.

4. INSPECTION. The state or local gas inspector of the side wall horizontally vented gas fueled equipment shall not approve the installation unless, upon inspection, the inspector observes carbon monoxide detectors and signage installed in accordance with the provisions of 248 CMR 5.08(2)(a)1 through 4.

5. EXEMPTIONS: The following equipment is exempt from 248 CMR 5.08(2)(a)1 through 4:

   (1.) The equipment listed in Chapter 10 entitled ”Equipment Not Required To Be Vented” in the most current edition of NFPA 54 as adopted by the Board; and

   (2.) Product Approved side wall horizontally vented gas fueled equipment installed in a room or structure separate from the dwelling, building or structure used in whole or in part for residential purposes.

c. MANUFACTURER REQUIREMENTS - GAS EQUIPMENT VENTING SYSTEM PROVIDED. When the manufacturer of Product Approved side wall horizontally vented gas equipment provides a venting system design or venting system components with the equipment, the instructions provided by the manufacturer for installation of the equipment and the venting system shall include:

1. Detailed instructions for the installation of the venting system design or the venting system components; and
2. A complete parts list for the venting system design or venting system.

d. MANUFACTURER REQUIREMENTS - GAS EQUIPMENT VENTING SYSTEM NOT PROVIDED. When the manufacturer of a Product Approved side wall horizontally vented gas fueled equipment does not provide the parts for venting the flue gases, but identifies “special venting systems”, the following requirements shall be satisfied by the manufacturer:

1. The referenced “special venting system” instructions shall be included with the appliance or equipment installation instructions; and
2. The “special venting systems” shall be Product Approved by the Board, and the instructions for that system shall include a parts list and detailed installation instructions.

e. A copy of all installation instructions for all Product Approved side wall horizontally vented gas fueled equipment, all venting instructions, all parts lists for venting instructions, and/or all venting design instructions shall remain with the appliance or equipment at the completion of the installation.

NOTE: Read the entire instruction manual before starting the installation.

NOTE: Please retain these instructions with the furnace after installation for future reference.

SAFETY CONSIDERATIONS

⚠ CAUTION

FURNACE RELIABILITY HAZARD

Failure to follow this warning could result in personal injury, death or property damage. Improper installation or misapplication of furnace may require excessive servicing or cause premature component failure.

Application of this furnace should be indoors with special attention given to vent sizing and material combustion air requirements, gas input rate, air temperature rise, unit leveling, and unit sizing.

⚠ WARNING

FIRE, EXPLOSION, ELECTRICAL SHOCK AND CARBON MONOXIDE POISONING HAZARD

Failure to follow this warning could result in personal injury, death, or property damage.

Improper installation, adjustment, alteration, service, maintenance, or use can cause carbon monoxide poisoning, explosion, fire, electrical shock, or other conditions which may cause personal injury or property damage. Consult a qualified installer, service agency, local gas supplier, or your distributor or branch for information or assistance. The qualified installer or agency must use only factory-authorized and listed kits or accessories when modifying this product.

Installing and servicing heating equipment can be hazardous due to gas and electrical components. **Only trained and qualified personnel should install, repair, or service heating equipment.** Untrained personnel can perform basic maintenance functions such as cleaning and replacing air filters. All other operations must be performed by trained service personnel. When working on heating equipment, observe precautions in literature, on tags, and on labels attached to or shipped with unit and other safety precautions that may apply.

These instructions cover the minimum requirements and conform to existing national standards and safety codes. In some instances, these instructions exceed certain local codes and ordinances, especially those that may not have kept up with changing residential construction practices. We require these instructions as a minimum for a safe installation.

Wear safety glasses and work gloves. Have a fire extinguisher available during start-up and adjustment procedures and service calls.

Recognize safety information. This is the safety-alert symbol ⚠. When you see this symbol on the furnace and in instructions or manuals, be alert to the potential for personal injury.

Understand the signal words DANGER, WARNING, and CAUTION. These words are used with the safety-alert symbol. DANGER identifies the most serious hazards which **will** result in severe personal injury or death. WARNING signifies a hazard which **could** result in personal injury or death. CAUTION is used to identify unsafe practices which **may** result in minor personal injury or product and property damage. NOTE is used to highlight suggestions which **will** result in enhanced installation, reliability, or operation.

⚠ CAUTION

CUT HAZARD

Failure to follow this caution may result in personal injury.

Sheet metal parts may have sharp edges or burrs. Use care and wear appropriate protective clothing and gloves when handling parts.

PG9YAB

TABLE OF CONTENTS

PAGE

IMPORTANT INFORMATION 2

SAFE INSTALLATION REQUIREMENTS 4

COMBUSTION & VENTILATION AIR 9

CONCENTRIC TERMINATION 31

GAS SUPPLY & PIPING 33

ELECTRICAL WIRING 37

DUCTWORK & FILTER 38

CHECKS & ADJUSTMENTS 40

FURNACE MAINTENANCE 42

SEQUENCE OF OPERATION & DIAGNOSTICS 42

ENERGY STAR

DESIGN CERTIFIED

CERTIFIED

Always Ask For FACTORY AUTHORIZED PARTS

AHRI CERTIFIED™ www.ahridirectory.org

Use of the AHRI Certified TM Mark indicates a manufacturer's participation in the program. For verification of certification for individual products, go to www.ahridirectory.org.

Certified System ISO 9001 QMI-SAI Global

SAFE INSTALLATION REQUIREMENTS

⚠ WARNING

FIRE, EXPLOSION, AND ASPHYXIATION HAZARD

Failure to follow this warning could result in personal injury or death.

Improper adjustment, alteration, service, maintenance or installation could cause personal injury, death and/or property damage.

Installation or repairs made by unqualified persons could result in hazards to you and others. Installation MUST conform to local codes or, in the absence of local codes, with codes of all governmental authorities having jurisdiction.

The information contained in this manual is intended for use by a qualified service agency that is experienced in such work, is familiar with all precautions and safety procedures required in such work, and is equipped with the proper tools and test instruments.

PG9YAB

NOTE: This furnace is design-certified by the CSA International (formerly AGA and CGA) for installation in the United States and Canada. Refer to the appropriate codes, along with this manual, for proper installation.

- Use only the type of gas approved for this furnace (see **Rating Plate** on unit). Overfiring will result in failure of heat exchanger and cause dangerous operation. (Furnaces can be converted to Propane gas with approved kit.)
- Install this furnace only in a location and position as specified in "*Installation*" of these instructions.
- Provide adequate combustion and ventilation air to the furnace as specified in " *Combustion and Ventilation Air*" of these instructions.
- Combustion products must be discharged outdoors. Connect this furnace to an approved vent system only, as specified in "*Vent and Combustion Air Piping*" of these instructions.
- Never test for gas leaks with an open flame. Use a commercially available soap solution made specifically for the detection of leaks to check all connections, as specified in "*Gas Supply and Piping, Final Check*" of these instructions.
- Always install furnace to operate within the furnace's intended temperature-rise range with a duct system which has an external static pressure within the allowable range, as specified in the Service and Maintenance manual. See furnace rating plate.
- When a furnace is installed so that supply ducts carry air circulated by the furnace to areas outside the space containing the furnace, the return air shall also be handled by a duct(s) sealed to the furnace casing and terminating outside the space containing the furnace.
- A gas-fired furnace for installation in a residential garage must be installed as specified in "*Installation*" of these instructions.
- This furnace is not to be used for temporary heating of buildings or structures under construction.
- **This furnace is NOT approved for installation in mobile homes, trailers or recreation vehicles.**
- Seal around supply and return air ducts.
- Install correct filter type and size.
- Unit **MUST** be installed so electrical components are protected from direct contact with water.

Safety Rules

Your unit is built to provide many years of safe and dependable service providing it is properly installed and maintained. However, abuse and/or improper use can shorten the life of the unit and create hazards for you, the owner.

The U.S. Consumer Product Safety Commission encourages installation of carbon monoxide alarms. There can be various sources of carbon monoxide in a building or dwelling. The sources could be gas-fired clothes dryers, gas cooking stoves, water heaters, furnaces, gas-fired fireplaces, wood fireplaces.

Carbon monoxide can cause bodily injury and/or death. Carbon monoxide or "CO" is a colorless and odorless gas produced when fuel is not burned completely or when the flame does not receive sufficient oxygen.

Therefore, to help alert people of potentially dangerous carbon monoxide levels, you should have a commercially available carbon monoxide alarm that is listed by a nationally recognized testing agency in accordance with Underwriters Laboratories Inc. Standard for Single and Multiple Station Carbon Monoxide Alarms, ANSI/UL 2034 or the CSA 6.19-01 Residential Carbon Alarming Devices installed and maintained in the building or dwelling concurrently with the gas-fired furnace installation (see Note below). The alarm should be installed as recommended by the alarm manufacturer's installation instructions.

There can be numerous sources of fire or smoke in a building or dwelling. Fire or smoke can cause bodily injury, death, and/or property damage. Therefore, in order to alert people of potentially dangerous fire or smoke, you should have fire extinguisher and smoke alarms listed by Underwriters Laboratories installed and maintained in the building or dwelling (see Note below).

NOTE: The manufacturer of your furnace does not test any alarms and makes no representations regarding any brand or type of alarms.

To ensure safe and efficient operation of your unit, you should do the following:

1. **Thoroughly read this manual and labels on the unit.** This will help you understand how your unit operates and the hazards involved with gas and electricity.
2. **Do not use this unit if any part has been under water.** Immediately call a qualified service technician to inspect the unit and to replace any part of the control system and any gas control which has been under water.
3. **Never obstruct the vent grilles, or any ducts that provide air to the unit.** Air must be provided for proper combustion and ventilation of flue gases.

Frozen Water Pipe Hazard

⚠ CAUTION

WATER DAMAGE TO PROPERTY HAZARD

Failure to follow this caution may result in property damage.

Do not leave your home unattended for long periods during freezing weather without turning off water supply and draining water pipes or otherwise protecting against the risk of frozen pipes and resultant damage.

Your furnace is designed solely to provide a safe and comfortable living environment. The furnace is NOT designed to ensure that water pipes will not freeze. It is equipped with several safety devices that are designed to turn the furnace off and prevent it from restarting in the event of various potentially unsafe conditions.

If your furnace remains off for an extended time, the pipes in your home could freeze and burst, resulting in water damage.

If the structure will be unattended during cold weather you should take these precautions.

1. Turn off the water supply to the structure and drain the water lines if possible and add an antifreeze for potable water to drain traps and toilet tanks. Open faucets in appropriate areas.

-or-

2. Have someone check the structure frequently during cold weather to make sure it is warm enough to prevent pipes from freezing. Instruct them on a service agency to call to provide service, if required.

-or-

3. Install a reliable remote sensing device that will notify somebody of freezing conditions within the home.

Winter Shutdown

If you go away during the winter months and do not leave the heat on in your home, the plastic transition box and the condensate trap on the furnace must be protected from freeze damage. (See Fig. 10 through Fig. 19)

1. Disconnect the $^5/_8$″(16 mm)OD rubber hose from the vent drain fitting that is located downstream of the combustion blower. Insert a funnel into the hose and pour four(4) ounces of sanitary type (RV) antifreeze into the condensate trap. Reconnect the $^5/_8$″ (16 mm) OD rubber hose to the stub on the vent drain fitting. Secure with the hose clamp.
2. Disconnect the $^3/_4$″ (19 mm) OD rubber hose from the condensate trap. Insert a funnel into the hose and and pour four(4) (ounces of sanitary type (RV) antifreeze into the plastic Transition box. Squeeze the hose together near the end and quickly reconnect the $^3/_4$″ (19 mm) OD rubber hose to the stub on the condensate trap. Secure with the hose clamp.

When you return home, your furnace will be ready to start, as it is not necessary to drain the antifreeze from the furnace.

INSTALLATION

⚠ WARNING

CARBON MONOXIDE POISONING HAZARD

Failure to follow this warning could result in personal injury or death.

This furnace can NOT be common vented or connected to any type B, BW or L vent or vent connector, nor to any portion of a factory-built or masonry chimney. If this furnace is replacing a previously common-vented furnace, it may be necessary to resize the existing vent and chimney to prevent oversizing problems for the other remaining appliance(s). See *Venting and Combustion Air Check* in *Gas Vent Installation* section. This furnace MUST be vented to the outside.

PG9YAB

Installation Positions

This furnace can be installed in an upflow, horizontal (either left or right) or downflow airflow position. DO NOT install this furnace on its back. For the upflow position, the return air ductwork can be attached to either the left or right side panel and/or the bottom. For horizontal and downflow positions, the return air ductwork must be attached to the bottom. The return air ductwork must **never** be attached to the back of the furnace.

Location and Clearances

1. Refer to Fig. 1 for typical installation and basic connecting parts required. Refer to Fig. 4 for typical horizontal direct vent installation and basic connecting parts required. Supply and return air plenums and duct are also required.
2. If furnace is a replacement, it is usually best to install the furnace where the old one was. Choose the location or evaluate the existing location based upon the minimum clearance and furnace dimensions (Fig. 2).

⚠ CAUTION

FROZEN AND BURST PIPE HAZARD

Failure to follow this caution may result in property damage.

Special precautions MUST be made is installing furnace in an area which may drop below freezing. This can cause improper operation or damage to equipment. If furnace environment has the potential of freezing, the drain trap and drain line must be protected. The use of electric heat tape or RV antifreeze is recommended for these installations. (See “Condensate Trap Freeze Protection Section”)

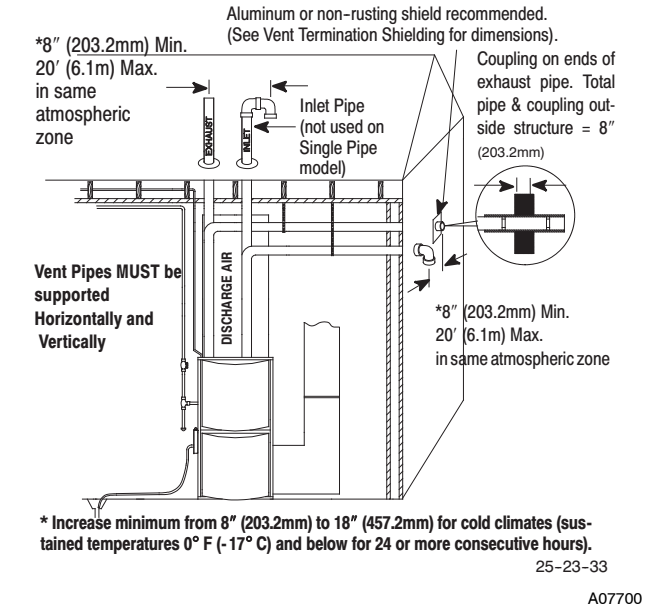

Fig. 1 - Typical Upflow Installation

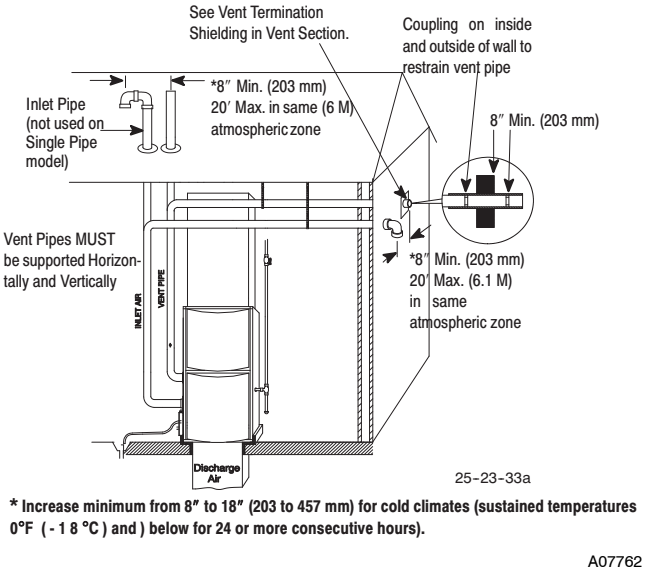

Fig. 2 - Typical Downflow Installation

Installation Requirements

1. Install furnace level.
2. This furnace is **NOT** to be used for temporary heat of buildings or structures under construction.
3. Install furnace as centralized as practical with respect to the heat distribution system.
4. Install the vent pipes as short as practical, and in accordance to these instructions. (See ***Vent and Combustion Air Piping*** section).
5. Maintain clearance for fire safety and servicing. A front clearance of 24″ (607 mm) required and 30″ (762mm) recommended for access to the burner, controls and filter. See clearance requirements in Fig. 4.
6. Use a raised base for upflow furnace if the floor is damp or wet at times.
7. For downflow installations, non combustible subbase must be used under the furnace unless installation is on a non combustible floor surface. This requirement applies even when a coil box or cabinet is used.
8. For horizontal installations, line contact is permissible only between lines formed by intersection of back and two sides of furnace jacket, and building joists, studs or framing.
9. Residential garage installations require:

- Burners and ignition sources installed at least 18″ (457 mm) above the floor.
- Located or physically protected from possible damage by a vehicle.

10. Local codes may require a drain pan under the entire furnace and condensate trap when the furnace is installed in attic application.

This furnace may be used for construction heat provided that all the following conditions are met:

- The furnace is permanently installed with all electrical wiring, piping, venting and ducting installed according to these installation instructions. A return air duct is provided, sealed to the furnace casing, and terminated outside the space containing the furnace. This prevents a negative pressure condition as created by the circulating air blower, causing a flame rollout and/or drawing combustion products into the structure.
- The furnace is controlled by a thermostat. It may not be “hot wired” to provide heat continuously to the structure without thermostatic control.
- Clean outside air is provided for combustion. This is to minimize the corrosive effects of adhesives, sealers and other construction materials. It also prevents the entrainment of drywall dust into combustion air, which can cause fouling and plugging of furnace components.
- The temperature of the return air to the furnace is maintained between 55° F (13° C) and 80° F (27° C) , with no evening setback or shutdown. The use of the furnace while the structure is under construction is deemed to be intermittent operation per our installation instructions.
- The air temperature rise is within the rated rise range on the furnace rating plate, and the firing rate has been set to the rating plate value.
- The filters used to clean the circulating air during the construction process must be either changed or thoroughly cleaned prior to occupancy.
- The furnace, ductwork and filters are cleaned as necessary to remove drywall dust and construction debris from all HVAC system components after construction is completed.
- After construction is complete, verify furnace operating conditions including ignition, input rate, temperature rise and venting according to these instructions.

⚠ WARNING

CARBON MONOXIDE POISONING HAZARD

Failure to follow this warning could result in personal injury or death.

Do NOT operate furnace in a corrosive atmosphere containing chlorine, fluorine or any other damaging chemicals, which could shorten furnace life.

Refer to *Combustion & Ventilation Air* section, *Contaminated Combustion Air* for combustion air evaluation and remedy.

Furnace Installation Considerations

The installation of the furnace for a given application will dictate the position of the furnace, the airflow, ductwork connections, vent and combustion air piping. Consideration must be given to the following:

Condensate Trap and Drain Lines

The supplied condensate trap must be attached to the furnace side panel on either the left or right side. For horizontal installations, the drain trap is vertically attached to the side panel below the furnace. A minimum clearance of 6″ (152 mm) below the furnace is required for the condensate trap. Downward slope of the condensate drain line from the condensate trap to the drain location must be provided. Adequate freeze protection of the drain trap and the drain line must be provided. See "*Condensate Drain Trap*" section for further details.

Leveling

Proper leveling of the furnace must be provided to insure proper drainage of the condensate from the furnace. The furnace must be level to within $^1/_4$″ (6 mm) from front to back and from side to side for upflow and downflow installations or top to bottom for horizontal installations.

Vent and Combustion Air Connections

For venting information literature, contact www.Payne.com with the complete model and serial number of the furnace.

On the Dual Certified furnace, the vent and combustion air pipes attach to the furnace through the top panel for the upflow and horizontal installations. For the downflow installation, the vent and combustion air pipes attach to the furnace through the alternate locations on the furnace side panels.

NOTE: On the Direct Vent furnace, the vent pipe attaches to the furnace through the side panels. The combustion air pipe attaches to the top panel or to the alternate location on the side panel.

On the Single Pipe furnace, the vent pipe attaches to the furnace through the furnace side panels.

NOTE: Repositioning of the combustion blower is required for the vent pipe connection to the furnace through the "right side" panel. See "*Vent and Combustion Air Piping*" section for further details.

Horizontal Furnace Installation

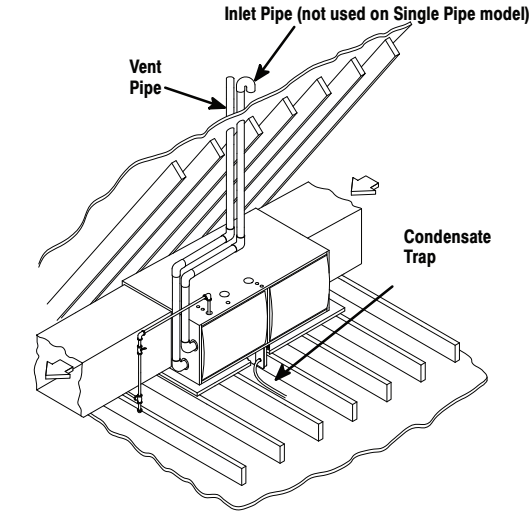

Fig. 3 - Typical Horizontal Installation

This furnace can be installed horizontally in an attic, basement, crawl space, alcove, or suspended from a ceiling in a basement or utility room (See Fig. 3). **Do not** install furnace on its back as safety control operation will be adversely affected.

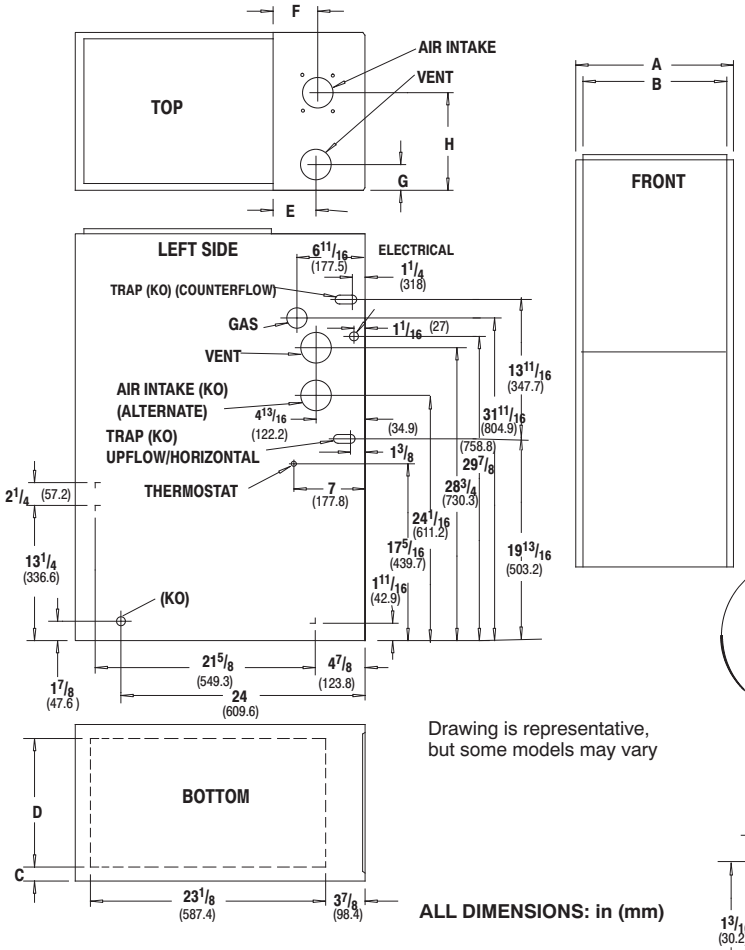

Drawing is representative, but some models may vary

ALL DIMENSIONS: in (mm)

MINIMUM CLEARANCES TO COMBUSTIBLE MATERIALS FOR ALL UNITS – in (mm)	
REAR	0
FRONT (combustion air openings in furnace and in structure)	3″ (76.2)
Required For Service	*24″ (609.6)
ALL SIDES Of SUPPLY PLENUM	1″ (25.4)
SIDES	0
VENT	0
TOP OF FURNACE	1″ (25.4)

*30″ (762mm) clearance recommended for furnace removal.

Horizontal position: Line contact is permissible only between lines formed by intersections of top and two sides of furnace jacket, and building joists, studs or framing.

NOTE: Evaporator "A" coil drain pan dimensions may vary from furnace duct opening size. Always consult evaporator specifications for duct size requirements.

Furnace is designed for bottom return or side return.

Return air through back of furnace is NOT allowed.

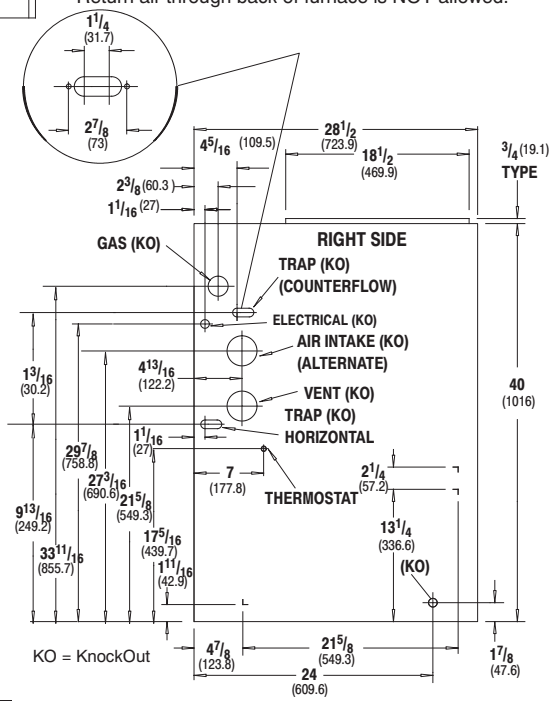

Unit Capacity	Cabinet		Bottom		Top			
	A	B	C	D	E	F	G	H
PG9YAB036060	19 1/8 (485.8)	17 5/8 (447.7)	2 1/8 (54)	14 3/4 (374.7)	4 3/8 (111.1)	4 1/2 (114.3)	2 1/2 (63.5)	9 1/2 (241.3)
PG9YAB036080	22 3/4 (577.9)	21 1/4 (539.8)	1 15/16 (49.2)	18 3/4 (476.3)	4 3/8 (111.1)	4 1/2 (114.3)	2 1/2 (63.5)	9 1/2 (241.3)
PG9YAB048080	22 3/4 (577.9)	21 1/4 (539.8)	1 15/16 (49.2)	18 3/4 (476.3)	4 3/8 (111.1)	4 1/2 (114.3)	2 5/8 (66.7)	11 3/8 (288.9)
PG9YAB060100	24 1/2 (622.3)	23 (584.2)	7/16 (11.1)	23 (584.2)	4 3/8 (111.1)	4 1/2 (114.3)	2 1/4 (57.2)	12 1/4 (311.2)

Specifications are subject to change without notice.

A09268P

Fig. 4 – Dimensions and Clearances

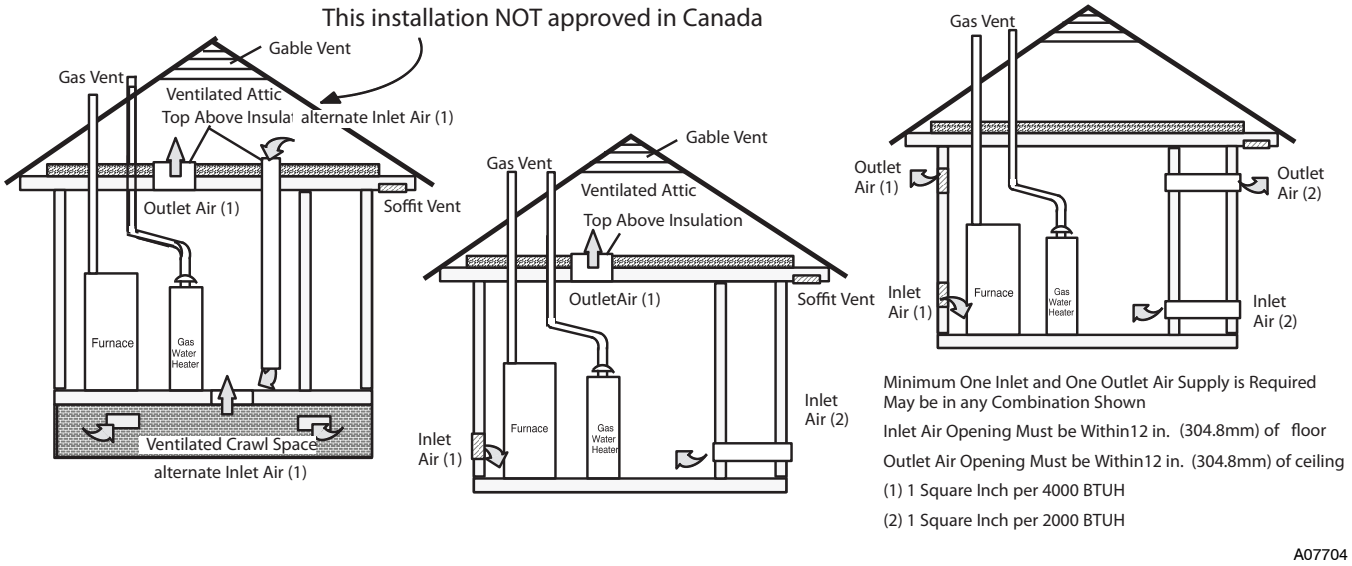

Fig. 5 - Outside Air
(This is ONLY a guide. Subject to codes of country having jurisdiction).

PG9YAB

COMBUSTION & VENTILATION AIR
For Single Pipe Installation

⚠ WARNING

CARBON MONOXIDE POISONING HAZARD

Failure to follow this warning could result in personal injury or death.

Use methods described here to provide combustion and ventilation air.

Furnaces require ventilation openings to provide sufficient air for proper combustion and ventilation of flue gases. All duct or openings for supplying combustion and ventilation air must comply with the gas codes, or in the absence of local codes, the applicable national codes.

Combustion and ventilation air must be supplied in accordance with one of the following:

NOTE: The Combustion & Ventilation Air Section in this document, uses tables and information from the ANSI Z223.1/NFPA 54. For use in Canada, use CSA B149.1 for this information.

1. Section 9.3, Air for Combustion and Ventilation, of the National Fuel Gas Code, (NFGC), ANSI Z223.1-2009/NFPA 54-2009 in the U.S.,
2. Sections 8.2, 8.3, 8.5, 8.6, 8.7, and 8.8 of National Standard of Canada, Natural Gas and Propane Installation Code (NSCNGPIC), CSA B149.1-10 in Canada,
3. Applicable provisions of the local building code.

This furnace can NOT be common vented or connected to any type B, BW or L vent or vent connector, nor to any portion of a factory-built or masonry chimney. Multistory venting is NOT permitted. If this furnace is replacing a previously common-vented furnace, it may be necessary to resize the existing vent and chimney to prevent oversizing problems for the other remaining appliance(s). See *"Venting and Combustion Air Check"* in this section. This furnace MUST be vented to the outside.

When the installation is complete, check that all appliances have adequate combustion air and are venting properly. See *Venting And Combustion Air Check* in *"Gas Vent Installation"* Section in this manual.

Outdoor Combustion Air Method

A space having less than 50 cubic feet per 1,000 BTUH (4.8 M^3/kW) input rating for all gas appliances installed in the space requires outdoor air for combustion and ventilation.

Air Openings and Connecting Ducts

1. Total input rating for all gas appliances in the space **MUST** be considered when determining free area of openings.
2. Connect ducts or openings directly to the outdoors.
3. When screens are used to cover openings, the openings **MUST** be no smaller than $^1/_4$″ (6 mm) mesh.
4. The minimum dimension of air ducts **MUST NOT** be less than 3″ (76 mm).
5. When sizing a grille, louver, or screen use the free area of opening. If free area is **NOT** stamped or marked on grill or louver, assume a 20% free area for wood and 60% for metal. Screens shall have a mesh size not smaller than $^1/_4$″ (6 mm) .

Confined Space Installation

NOTE: A confined space is defined as an area with less than 50 cubic feet per (1.4^{3}M) 1,000 BTUH (2.33 cm^2/kW) input rating for all gas appliances installed in the area.

Requirements

1. Provide the space with sufficient air for proper combustion and ventilation of flue gases using horizontal or vertical ducts or openings.
2. **Fig. 5** illustrates how to provide combustion and ventilation air when two permanent openings, one inlet and one outlet, are used.
   a. One opening **MUST** commence within 12″ (305 mm) of the floor and the second opening **MUST** commence within 12″ (305 mm) of the ceiling.
   b. Size openings and ducts per **Table 1**.
   c. Horizontal duct openings require 1 square inch of free area per 2,000 BTUH (1,1 cm^2/kW) of combined input for all gas appliances in the space (see **Table 1**).

d. Vertical duct openings or openings directly communicating with the outdoors require 1 square inch of free area per 4,000 BTUH (5.5 cm^2/kW) for combined input of all gas appliances in the space (see **Table 1).**

3. When one permanent outdoor opening is used, the opening requires:
   a. 1 sq. in of free area per 3,000 BTUH (7 cm^2/kW) for combined input of all gas appliances in the space (see Table 1) and
   b. not less than the sum of the areas of all vent connectors in the space.

The opening shall commence within 12″ (305 mm) of the top of the enclosure. Appliances shall have clearances of at least 1″ (25 mm) from the sides and back and 6″ from the front. The opening shall directly communicate with the outdoors or shall communicate through a vertical or horizontal duct to the outdoors or spaces (crawl or attic) that freely communicate with the outdoors.

4. Combination of Indoor and Outdoor Air shall have:
   a. Indoor openings that comply with the **Indoor Combustion Air** Method below and
   b. Outdoor openings located as required in the **Outdoor Combustion Air** Method above and
   c. Outdoor openings sized as follows.
      (1.) Calculate the **Ratio** of all Indoor Space volume divided by required volume for **Indoor Combustion Air** Method.
      (2.) Outdoor opening size reduction **Factor** is **1** minus the **Ratio** in 1) above.
      (3.) Minimum size of Outdoor openings shall be the size required in **Outdoor Combustion Air** Method above multiplied by reduction **Factor**.

PG9YAB

Table 1 – Free Area

BTUH Input Rating	Minimum Free Area Required for Each Opening or Duct to Outdoors			
	Two Horizontal Ducts (sq. in./2,000 BTUH)	Single Opening (sq. in./3,000 BTUH)	Two Vertical Ducts or Openings (sq. in./4,000 BTUH)	Round Duct (sq. in. /4,000 BTUH)
60,000	**30 sq. in. (194 cm^2)**	**20 sq. in. (129 cm^2)**	**15 sq. in. (97 cm^2)**	**5″ (127 mm)**
80,000	**40 sq. in. (258 cm^2)**	**26.7 sq. in. (172 cm^2)**	**20.0 sq. in. (129 cm^2)**	**5″ (127 mm)**
100,000	**50 sq. in. (322 cm^2)**	**33.3 sq. in. (215 cm^2)**	**25 sq. in. (161 cm^2)**	**6″ (152 mm)**

EXAMPLE: Determining Free Area

Furnace		Water Heater		Total Input		
100,000	+	30,000	=	(130,000 ÷ 4,000)	=	32.5 Sq. In. Vertical
Furnace		Water Heater		Total Input		
100,000	+	30,000	=	(130,000 ÷ 2,000)	=	65 Sq. In. Horizontal

Indoor Combustion Air (Unconfined Space)

⚠ WARNING

CARBON MONOXIDE POISONING HAZARD

Failure to follow this warning could result in personal injury or death.

Most homes will require additional air from outdoors for combustion and ventilation. A space with at least 50 cubic feet per 1,000 Btuh (4.8 M^3/kW) Input rating or homes with tight construction may need outdoor air, supplied through ducts, to supplement air infiltration for proper combustion and ventilation of flue gasses.

Standard and Known-Air-Infiltration Rate Methods

© NFPA & AGA

Indoor air is permitted for combustion and ventilation, if the **Standard** or **Known-Air-Infiltration Rate** Method is used.

The **Standard** Method may be used, if the space has no less volume than 50 cubic feet per 1,000 BTUH (4.8 M^3/kW) input rating for all gas appliances installed in the space. The **standard** method permits indoor air to be used for combustion and ventilation air.

The **Known Air Infiltration Rate** Method shall be used if the infiltration rate is known to be less than 0.40 air changes per hour (ACH) and equal to or greater than 0.10 ACH. Infiltration rates greater than 0.60 ACH shall not be used. The minimum required volume of the space varies with the number of ACH and shall be determined per **Table 2** or **Equations 1 and 2**. Determine the minimum required volume for each appliance in the space, and add the volumes together to get the total minimum required volume for the space.

⚠ WARNING

CARBON MONOXIDE POISONING HAZARD

Failure to supply additional air by means of ventilation grilles or ducts could result in personal injury or death.

An unconfined space or homes with tight construction may not have adequate air infiltration for proper combustion and ventilation of flue gasses. Most homes will require additional air.

Table 2 – Minimum Space Volume for 100% Combustion and Ventilation Air from Indoors - Ft^3 (M^3)

	Other Than Fan–Assisted Total (1,000 Btuh)			Fan–assisted Total (1,000's Btuh)			
ACH	30	40	50	50	75	100	125
0.60	1,050 (29.7)	1,400 (39.2)	1,750 (49.0)	1,250 (35.0)	1,875 (52.5)	2,500 (70.0)	3,125 (87.5)
0.50	1,260 (35.3)	1,680 (47.0)	2,100 (58.8)	1,500 (42.0)	2,250 (63.0)	3,000 (84.0)	3,750 (105.0)
0.40	1,575 (44.1)	2,100 (58.8)	2,625 (73.5)	1,875 (52.5)	2,813 (78.8)	3,750 (105.0)	4,688 (131.3)
0.30	2,100 (58.8)	2,800 (78.4)	3,500 (98.0)	2,500 (70.0)	3,750 (105.0)	5,000 (140.0)	6,250 (175.0)
0.20	3,150 (88.2)	4,200 (117.6)	5,250 (147.0)	3,750 (105.0)	5,625 (157.5)	7,500 (210.0)	9,375 (262.5)
0.10	6,300 (176.4)	8,400 (235.2	10,500 (294.0)	7,500 (210.0)	11,250 (315.0)	15,000 (420.0)	18,750 (525.0)
0.00	NP	NP	NP	NP	NP	NP	NP

ACH = Air Changes per Hour

NP = Not Permitted

Table 2 Minimum Space Volumes were determined by using the following equations from the National Fuel Gas Code ANSI Z223.1/NFPA 54-2009, 9.3.2.2:

1. For appliances **other than fan-assisted appliances** (such as a draft hood-equipped water heater), calculate using the following equation:

$$\text{Required Volume}_{\text{other}} \geq \frac{21\ \text{ft}^3}{\text{ACH}} \left(\frac{I_{\text{other}}}{1000\ \text{Btu / hr}} \right)$$

2. For **fan-assisted appliances** (such as this furnace), calculate using the following equation:

$$\text{Required Volume}_{\text{fan}} \geq \frac{15\ \text{ft}^3}{\text{ACH}} \left(\frac{I_{\text{fan}}}{1000\ \text{Btu / hr}} \right)$$

where:

I_{other} = all appliances **other than fan-assisted** input in Btu per hour

I_{fan} = **fan-assisted appliance** input in Btu per hour

ACH = air change per hour (percent of volume of space exchanged per hour, expressed as a decimal)

3. For purposes of this calculation, an infiltration rate greater than 0.60 ACH shall not be used in the equations above.

The following requirements apply to the **Standard** Method and to the **Known Air Infiltration** Rate Method.

- Adjoining rooms can be considered part of a space, if there are no closeable doors between rooms.
- Combining spaces on the same story. Each opening shall have a minimum free area of at least 1 in.^{2}/1,000 BTUH (2,200 mm^2/kW) of the total input rating of all appliances in the space but not less than 100 in.^{2} (0.06 m^2). One opening shall commence within 12 in. (305 mm) of the top, and one opening shall commence within 12 in. (305 mm) of the bottom, of the enclosure. The minimum dimension of air openings shall not be less than 3 in. (76 mm).
- Combining spaces in different stories. The volumes of spaces on different stories shall be considered as communicating spaces where such spaces are connected by one or more openings in doors or floors having a total minimum free area of 2 in.^{2}/1,000 BTUH (4,400 mm^2/kW) of total input rating of all appliances.
- An attic or crawl space may be considered a space that freely communicates with the outdoors provided there are adequate ventilation openings directly to outdoors. Openings **MUST** remain open and **NOT** have any means of being closed off. Ventilation openings to outdoors **MUST** be at least 1 square inch of free area per 4,000 BTUH (550 mm^2/kW) of total input rating for all gas appliances in the space.
- In spaces that use the **Indoor Combustion Air** Method, infiltration should be adequate to provide air for combustion, ventilation and dilution of flue gases. However, in buildings with unusually tight construction, additional air **MUST** be provided using the methods described in section titled ***Outdoor Combustion Air Method***:
- Unusually tight construction is defined as Construction with:
  1. Walls and ceilings exposed to the outdoors have a continuous, sealed vapor barrier. Openings are gasketed or sealed and
  2. Doors and openable windows are weather stripped and
  3. Other openings are caulked or sealed. These include joints around window and door frames, between sole plates and floors, between wall-ceiling joints, between wall panels, at penetrations for plumbing, electrical and gas lines, etc.

PG9YAB

Ventilation Air

Some provincial codes and local municipalities require ventilation or make-up air be brought into the conditioned space as replacement air. Whichever method is used, the mixed return air temperature across the heat exchanger **MUST** not fall below 60° so that flue gases will not condense excessively in the heat exchanger. Excessive condensation will shorten the life of the heat exchanger and possibly void your warranty.

Venting and Combustion Air Check

NOTE: If this installation replaces an existing furnace from a commonly vented system, the original venting system may no longer be sized to properly vent the attached appliances. An improperly sized venting system may cause the formation of condensate in the vent and the leakage or spillage of vent gases. To make sure there is adequate combustion air for all appliances, **MAKE THE FOLLOWING CHECK**.

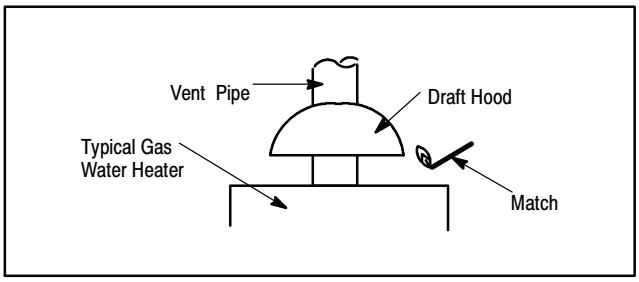

A07688

Fig. 6 - Vent Check

The following information is supplied to allow the installer to make adjustments to the setup of existing appliances, **IF REQUIRED,** based on good trade practices, local codes, and

good judgement of the installer. Manufacturer does **NOT** take responsibility for modifications made to existing equipment.

⚠ WARNING

CARBON MONOXIDE POISONING HAZARD

Failure to follow the steps outlined below for each appliance connected to the venting system being placed into operation, could result in carbon monoxide poisoning or death:

The following steps shall be followed for each appliance connected to the venting system being placed into operation, while all other appliances connected to the venting system are not in operation:

1. Seal any unused openings in the venting system.
2. Inspect the venting system for proper size and horizontal pitch, as required in the *National Fuel Gas Code, ANSI Z223.1/NFPA 54* or *CSA B149.1, Natural Gas and Propane Installation Code* and these instructions. Determine that there is no blockage or restriction, leakage, corrosion and other deficiencies which could cause an unsafe condition.
3. As far as practical, close all building doors and windows and all doors between the space in which the appliance(s) connected to the venting system are located and other spaces of the building.
4. Close fireplace dampers.
5. Turn on clothes dryers and any appliance not connected to the venting system. Turn on any exhaust fans, such as range hoods and bathroom exhausts, so they are operating at maximum speed. Do not operate a summer exhaust fan.
6. Follow the lighting instructions. Place the appliance being inspected into operation. Adjust the thermostat so appliance is operating continuously.
7. Test for spillage from draft hood equipped appliances at the draft hood relief opening after 5 minutes of main burner operation. Use the flame of a match or candle. (Fig. 6.)
8. If improper venting is observed, during any of the above tests, the venting system must be corrected in accordance with the *National Fuel Gas Code, ANSI Z223.1/NFPA 54* and/or *CSA B149.1, Natural Gas and Propane Installation Code*.
9. After it has been determined that each appliance connected to the venting system properly vents when tested as outlined above, return doors, windows, exhaust fans, fireplace dampers and any other gas-fired burning appliance to their previous conditions of use.

For Two Pipe Installation (Direct Vent)

This furnace can NOT be common vented or connected to any type B, BW or L vent or vent connector, nor to any portion of a factory-built or masonry chimney. If this furnace is replacing a previously common-vented furnace, it may be necessary to resize the existing vent and chimney to prevent oversizing problems for the other remaining appliance(s). See *"Venting and Combustion Air Check"* in this section. This furnace MUST be vented to the outside.

VENT AND COMBUSTION AIR PIPING

⚠ WARNING

CARBON MONOXIDE POISONING HAZARD

Failure to follow this warning could result in personal injury or death.

Use methods described here to provide combustion and ventilation air.

Dual Certified (PG9YAB Models)

This furnace is certified as a category IV appliance. This furnace can be installed as a direct vent furnace using outside air for combustion or the furnace can use air from inside the structure for combustion. The **INLET** air pipe is optional. If combustion air comes from inside the structure, adequate make up air **MUST** be provided to compensate for oxygen burned. See ***Confined Space Installation*** in the ***Combustion and Ventilation Air*** chapter. If combustion air is drawn from outside the structure, it **MUST** be taken from the same atmospheric pressure zone as the vent pipe.

Contaminated Combustion Air

Installations in certain areas or types of structures will increase the exposure to chemicals or halogens that may harm the furnace.

The following areas or types of structures may contain or have exposure to the substances listed below. The installation must be evaluated carefully as it may be necessary to provide outside air for combustion.

- Commercial buildings.
- Buildings with indoor pools.
- Furnaces installed in laundry rooms.
- Furnaces installed in hobby or craft rooms.
- Furnaces installed near chemical storage areas.
- Permanent wave solutions for hair.
- Chlorinated waxes and cleaners.
- Chlorine based swimming pool chemicals.
- Water softening chemicals.
- De-icing salts or chemicals.
- Carbon tetrachloride.
- Halogen type refrigerants.
- Cleaning solvents (such as perchloroethylene).
- Printing inks, paint removers, varnishes, etc.
- Hydrochloric acid.
- Sulfuric Acid.
- Solvent cements and glues.
- Antistatic fabric softeners for clothes dryers.
- Masonry acid washing materials.

Vent and Combustion Air Piping Guidelines

This furnace is approved for venting with Schedule 40 PVC, CPVC, ABS fittings, and Cellular Core and SDR-26 PVC pipe.

Applicable ASTM Standards for Vent Materials						
Materials	Sch. 40 Pipe	SDR Pipe	Cell Core Pipe	Fittings	Primer	Solvent Cement
ABS	D1527	—	F628	D2468 & D2661	– –	D2235
PVC	D1785	D2241	F891	D2466 & D2665	F656	D2564
CPVC	F441	F442	– –	F438	– –	F493
ABS to PVC	– –	– –	– –	– –	– –	D3138

NOTE:

1. In Canada, all pipe, fittings & cements must conform to applicable CSA standards or to local codes having jurisdiction.
2. Only use solvent cements that are marked for use with the specific venting material.
3. ABS to PVC transition joints REQUIRE a special solvent cement that meets the requirements of ASTM D3138.
4. Refer to ASTM D2855 for general procedure to use for cementing plastic pipe and fittings.

NOTE: In order to create a seal that allows future removal of pipe, **RTV sealant MUST be used on the inlet pipe** where it joins to the furnace.

NOTE: All vent piping **MUS**T be installed in compliance with local codes or ordinances, these instructions, good trade practices, and codes of country having jurisdiction.

1. Determine the best routing and termination for the vent pipe and air inlet pipe by referring to all of the instructions and guidelines in this Section.
2. Determine the size required for the vent pipe and air inlet pipe.
3. Loosely assemble all venting parts without adhesive (pipe joint cement) for correct fit before final assembly.
4. Furnace shall be installed so as to prevent the accumulation of condensate.
5. Use of vertical piping is preferred because there will be some moisture in the flue gases that may condense as it leaves the vent pipe (See *Instructions For Horizontal Vents*).
6. The vertical vent pipe **MUST** be supported so that no weight is allowed to rest on the combustion blower.
7. Exhaust vent piping or air inlet piping diameter **MUST NOT** be reduced.
8. All exhaust vent piping from the furnace to termination **MUST** slope upwards. A minimum of $^1/_4$″ (6 mm) per foot of run is required to properly return condensate to the furnace drain system.
9. Use DWV type long radius elbows whenever possible, as they provide for the minimum slope on horizontal runs and they provide less resistance in the vent system. If DWV elbows cannot be used, use two, 45° elbows when possible. On horizontal runs the elbows can be slightly misaligned to provide the correct slope.
10. All horizontal pipe runs **MUST** be supported at least every five feet with galvanized strap or other rust resistant material. **NO** sags or dips are permitted.
11. All vertical pipe runs **MUST** be supported every six feet where accessible.
12. The minimum pipe run length is 2′ (.6 M).
13. The piping can be run in the same chase or adjacent to supply or vent pipe for water supply or waste plumbing. It can also be run in the same chase with a vent from another 90+ furnace.

NOTE: In **NO** case can the piping be run in a chase where temperatures can exceed 140° F (60° C). or where radiated heat from adjacent surfaces would exceed 140° F (60° C).

14. The vent outlet **MUST** be installed to terminate in the same atmospheric pressure zone as the combustion air inlet.
15. The vent system can be installed in an existing unused chimney provided that:

- Both the exhaust vent and air intake run the length of the chimney.
- No other gas fired appliance or fireplace (solid fuel) is vented into the chimney.
- The top of the chimney **MUST** be sealed flush or crowned up to seal against rain or melting snow so **ONLY** the piping protrudes.
- The termination clearances shown in Fig. 7 and 8 are maintained.

16. Furnace applications with vertical vents requiring vent diameter increaser fittings **must** have increaser fittings installed in vertical portion of the vent. Condensate will be trapped in the vent if the vent diameter is increased prior to having an elbow turned upward. This could cause nuisance tripping of the pressure switch.

Combustion Air and Vent Piping Insulation Guidelines

NOTE: Use closed cell, neoprene insulation or equivalent. If Fiberglass or equivalent insulation is used it must have a vapor barrier. Use R values of 7 up to 10′, (2.1 – 3.0 M) R–11 if exposure exceeds 10′. If Fiberglass insulation is used, exterior to the structure, the pipe **MUST** be boxed in and sealed against moisture.

1. When the vent or combustion air pipe height above the roof exceeds 30″(762 mm), or if an exterior vertical riser is used on a horizontal vent to get above snow levels, the exterior portion **MUST** be insulated.
2. When combustion air inlet piping is installed above a suspended ceiling, the pipe **MUST** be insulated with moisture resistant insulation such as Armaflex or other equivalent type of insulation.
3. Insulate combustion air inlet piping when run in warm, humid spaces.

Sizing Combustion Air and Vent Pipe

Consult **Table 3** to select the proper diameter exhaust and combustion air piping. Exhaust and combustion air piping is sized for each furnace BTUH size based on total lineal vent length (on inlet ***or*** outlet side), and number of 90° elbows required. Two 45° elbows can be substituted for one 90° elbow. The elbow or elbows used for vent termination outside the structure **ARE** counted, including elbows needed to bring termination above expected snow levels. The elbow inside the furnace on the PG9YAB **IS NOT** included in the count.

Table 3 – Pipe Diameter Table

PIPE DIAMETER TABLE PG9YAB MODEL 60,000 BTUH Furnaces
10′ (3.0 M) & (3) 90° elbows with 1.5″ (13 mm) PVC pipe **40**′ (12.1 M) & (5) 90° elbows with 2″ (51 mm) PVC pipe or **70**′ (21.3 M) & (5) 90° elbows with 3″ (76 mm) PVC pipe
80,000 BTUH Furnace
40′ (12.1 M) & (5) 90° elbows with 2″ (51 mm) PVC pipe or **40**′ (12.1 M) & (5) 90° elbows with 3″ (76 mm) PVC pipe
100,000 BTUH Furnace
10 ′ (3.0 M) & (2) 90° elbows with 2″ (51 mm) PVC pipe or **40**′ (12.1 M) & (5) 90° elbows with 3″ (76 mm) PVC pipe
Elbows are DWV Long Radius Type for 2″ (51 mm) and 3″ (76 mm) vents.

If more than five elbows are required, reduce the length of both the inlet and exhaust pipes 5′ (1.5 M) for each additional elbow used. If less than five elbows are required, the length can be INCREASED by 5′ (1.5 M) for each additional elbow NOT used.

PG9YAB

NOTE: It is allowable to use larger diameter pipe and fitting than shown in the tables but **not** smaller diameters than shown.

For *"Concentric Termination Kit"* Venting see Table 4 in this manual.

Vent Termination Clearances

⚠ WARNING

CARBON MONOXIDE POISONING HAZARD

Failure to follow this warning could result in personal injury or death.

Inlet and outlet pipes may NOT be vented directly above each other.

1. Determine termination locations based on clearances specified in following steps and as shown in Fig. 7, 8, Fig. 21 through Fig. 23.

For *"Concentric Termination Kit"* clearances, see Fig. 30 through **Fig. 35** in this manual**.**

2. For Direct Vent Installation refer to Fig. 7 for vent termination clearances.
3. For Single Pipe Installation refer to Fig. 8 for vent termination clearances.

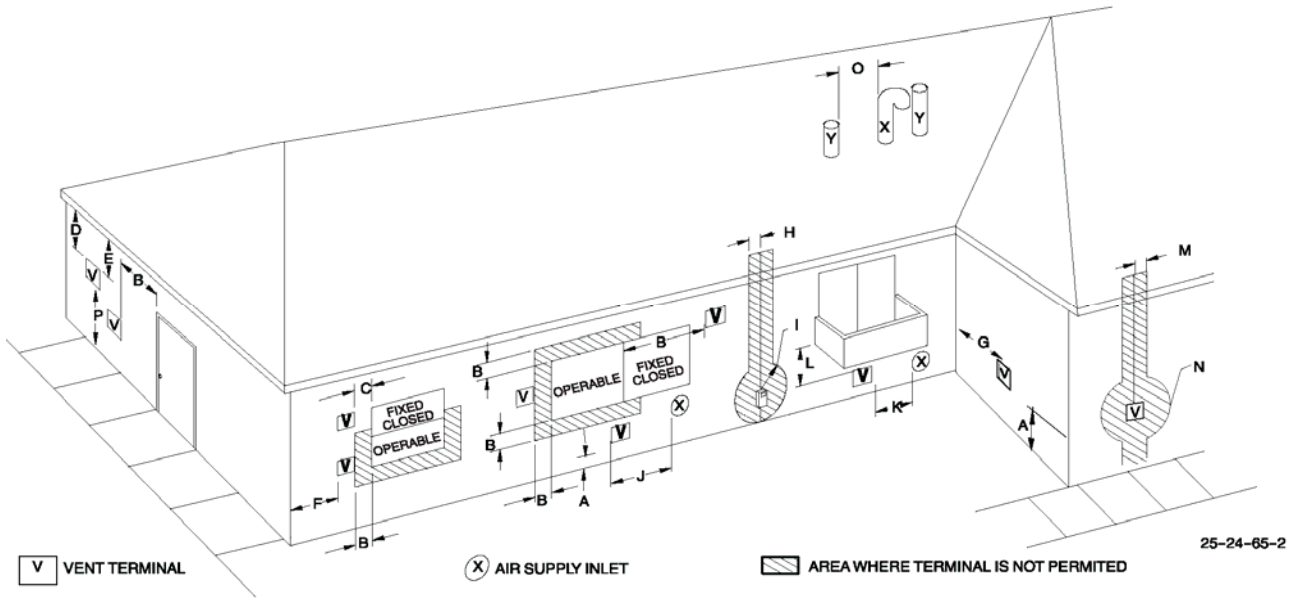

Item	Clearance Description	Canadian Installation (1)	U.S. Installation (2)
A	Clearance above grade, veranda, porch, deck, balcony, or anticipated snow level	12 inches(30 cm) #	12 inches (30 cm)
B	Clearance to a window or door that may be opened	12 inches (30 cm) for appliances > 10,000 Btuh (3 kW) and ≤ 100,000 Btuh (30 kW), 36 inches (91 cm) for appliances > 100,000 Btuh (30 kW)	9 inches (23 cm) for appliances > 10,000 Btuh (3kW) and ≤ 50,000 Btuh (15kW), 12 inches (30cm) for appliances > 50,000 Btuh (15kW)
C	Clearance to a permanently closed window	*	*
D	Vertical clearance to a ventilated soffit located above the terminal within a horizontal distance of 2 feet(61cm) from the centerline of the terminal	*	*
E	Clearance to an unventilated soffit	*	*
F	Clearance to an outside corner	*	*
G	Clearance to an inside corner	*	*
H	Clearance to each side of the centerline extended above electrical meter or gas service regulator assembly	3 feet (91 cm) within 15 feet (4.5 m) above the meter/regulator assembly	3 feet (91 cm) within 15 feet(4.5 m) above the meter/regulator assembly
I	Clearance to service regulator vent outlet	3 feet (91 cm)	*
J	Clearance to non-mechanical air supply inlet to building or the combustion air inlet to any other appliance	12 inches (30 cm) for applieances >10,000 Btuh(3 kW) and ≤ 100,000 Btuh(30kW), 36 inches (91cm) for appliances > 100,000 Btuh(30kW)	9 inches (23 cm) for appliances > 10,000 Btuh (3kW) and ≤ 50,000 Btuh (15kW), 12 inches (30cm) for appliances > 50,000 Btuh (15kW)
K	Clearance to a mechanical air supply inlet	6 feet (1.83 m)	3 feet(91 cm) above if within 10 feet (3m)horizontally
L	Clearance under a veranda, porch, deck, or balcony	12 inches(30 cm) +	*
M	Clearance to each side of the centerline extended above or below vent terminal of the furnace to a dryer or water heater vent, or other appliance's direct vent intake or exhaust.	12 inches(30 cm)	12 inches(30 cm)
N	Clearance to the vent terminal of a dryer vent, water heater vent, or other appliances direct vent intake or exhaust.	3 feet (91 cm)	3 feet (91 cm)
O	Clearance from a plumbing vent stack	3 feet (91 cm)	3 feet (91 cm)
P	Clearance above paved sidewalk or paved driveway located on public property	7 feet (2.13m)**	*

(1.) In accordance with the current CSA B149.1, Natural Gas and Propane Installation Code

(2.) In accordance with the current ANSI Z223.1/NFPA 54, National Fuel Gas Code

18 ˝ (46 cm) above roof surface

+ Permitted only if veranda, porch, deck, or balcony is fully open on a minimum of two sides beneath the floor.

* For clearances not specified in ANSI Z223.1/NFPA 54 or CSA B149.1, clearances shall be in accordance with local installation codes and the requirements of the gas supplier and the manufacturer's installation instructions

** A vent shall not terminate above a sidewalk or paved driveway that is located between two single family dwellings and serves both dwellings.

Notes:

1. The vent for this appliance shall not terminate
   a. Over public walkways; or
   b. Near soffit vents or crawl space vents or other areas where condensate or vapor could create a nusaince or hazard or property damage; or
   c. Where condensate vapor could cause damage or could be detrimental to the operation of regulators, relief valves, or other equipment.
2. When locating vent terminations, consideration must be given to prevailing winds, location, and other conditions which may cause recirculation of the combustion products of adjacent vents. Recirculation can cause poor combustion, inlet condensate problems, and accelerated corrosion of the heat exchangers.
3. Avoid venting under a deck or large overhang. Recirculation could occur and cause performance or system problems.

A06675

Fig. 7 – Direct Vent Termination Clearance

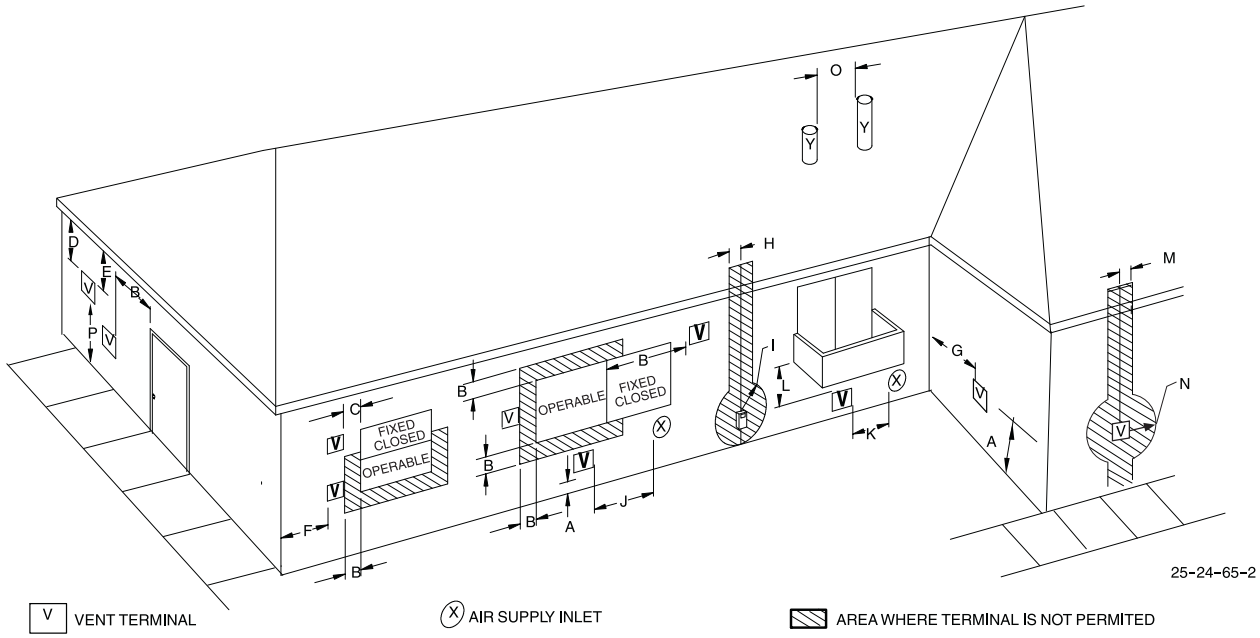

Item	Clearance Descriptions	Canadian Installation (1)	U.S. Installation (2)
A	Clearance above grade, veranda, porch, deck, balcony, or anticipated snow level	12 inches (30cm) #	12 inches (30 cm)
B	Clearance to a window or door that may be opened	6 inches (15 cm) for appliances ≤ 10,000 Btuh (3 kW) 12 inches (30 cm) for appliances > 10,000 Btuh (3 kW0) and ≤ 100,000 Btuh (30 kW), 36 inches (91 cm) for appliances > 100,000 Btuh (30 kW)	4 feet(1.2 m) below or to the side of the opening. 1 foot(30 cm) above the opening.
C	Clearance to a permanently closed window	*	*
D	Vertical clearance to a ventilated soffit located above the terminal within a horizontal distance of 2´(61cm) from the centerline of the terminal	*	*
E	Clearance to an unventilated soffit	*	*
F	Clearance to an outside corner	*	*
G	Clearance to an inside corner	*	*
H	Clearance to each side of the centerline extended above electrical meter or gas service regulator assembly	3 feet (91 cm) within 15 feet(4.5 m) above the meter/regulator assembly	3 feet (91 cm) within 15 feet (4.5 m) above the meter/regulator assembly
I	Clearance to service regulator vent outlet	3 feet (91 cm)	*
J	Clearance to non-mechanical air supply inlet to building or the combustion air inlet to any other appliance	6 inches (15 cm) for appliances ≤ 10,000 Btuh (3 kW) 12 inches (30 cm) for appliances > 10,000 Btuh (3 kW0) and ≤ 100,000 Btuh (30 kW) 36 inches (91 cm) for appliances > 100,000 Btuh (30 kW)	4 feet(1.2 m) below or to the side of opening: 1 foot (30 cm) above opening.
K	Clearance to a mechanical air supply inlet	6 feet(1.83 m)	3 feet(91 cm) above if within 10 feet (3 m horizontally)
L	Clearance under a veranda, porch, deck, or balcony	12 inches(30 cm) +	*
M	Clearance to each side of the centerline extended above or below vent terminal of the furnace to a dryer or water heater vent, or other appliance's direct vent intake or exhaust.	*	*
N	Clearance to the vent terminal of a dryer vent, water heater vent, or other appliances direct vent intake or exhaust.	*	*
O	Clearance from a plumbing vent stack	*	*
P	Clearance above paved sidewalk or paved driveway located on public property	7 feet (2.13m)**	7 feet (2.13m)

(1.) In accordance with the current CSA B149.1, Natural Gas and Propane Installation Code

(2.) In accordance with the current ANSI Z223.1/NFPA 54, National Fuel Gas Code

18˝ (46 cm) above roof surface

+ Permitted only if veranda, porch, deck, or balcony is fully open on a minimum of two sides beneath the floor.

* For clearances not specified in ANSI Z223.1/NFPA 54 or CSA B149.1, clearances shall be in accordance with local installation codes and the requirements of the gas supplier and the Manufacturer's installation instructions.

** A vent shall not terminate above a sidewalk or paved driveway that is located between two single family dwellings and serves both dwellings.

Notes:

1. The vent for this appliance shall not terminate
   a. Over public walkways; or
   b. Near soffit vents or crawl space vents or other areas where condensate or vapor could create a nusiance or hazard or property damage; or
   c. Where condensate vapor could cause damage or could be detrimental to the operation of regulators, relief valves, or other equipment.
2. When locating vent terminations, consideration must be given to prevailing winds, location, and other conditions which may cause recirculation of the combustiob products of adjacent vents. Recirculation can cause poor combustion, inlet condensate problems, and accelerated corrosion of the heat exchangers.
3. Avoid venting under a deck or large overhang. Recirculation could occur and cause performance or system problems.

Fig. 8 - Other than Direct Vent Termination Clearance

Condensate Drain Trap

This furnace removes both sensible and latent heat from the products of combustion. Removal of the latent heat results in condensation of the water vapor. The condensate is removed from the furnace through the drains in the plastic transition and the vent fitting. The drains connect to the externally mounted condensate drain trap on the left or right side of the furnace.

The start-up of a new furnace will involve a cycle or two of the furnace to properly prime the condensate trap with water. Until the trap is fully primed, some condensate will be pulled into the combustion blower. The furnace may cycle on the pressure switch connected to the plastic transition box due to condensate buildup. After the trap is primed, the condensate will start draining from the furnace. The combustion blower will clear out any remaining condensate in the blower housing through the vent fitting downstream of the blower. Note that the condensate trap can also be primed by pouring water into the $^1/_2$″ drain hose. Remove the$^1/_2$″ ID drain hose from either the gutter or the white PVC tee trap. Using a funnel pour eight (8) ounces of water into $^1/_2$″(13 mm) ID drain hose. Water will flow through the drain hose and into the condensate drain trap. This will prime both the vent and the transition sides of the trap. Reconnect the $^1/_2$″(13 mm) ID drain hose to the original component, either the gutter or the PVC tee trap.

The condensate drain trap supplied with the furnace MUST be used. The drain connection on the condensate drain trap is sized for $^3/_4$″ PVC or CPVC pipe, however alternate $^1/_2$″(13 mm) CPVC (nominal $^5/_8$″ O.D.) or vinyl tubing with a minimum inner diameter (I.D.) of $^5/_8$″ may also be used, as allowed by local codes. Alternate drain pipes and hoses may be used as allowed by local codes.

The drain line must maintain a $^1/_4$″ (6 mm) per foot downward slope toward the drain. $^1/_4$″ (6 mm) per foot is recommended. Installation of an overflow line is recommended when the $^1/_4$″ (6 mm) per foot slope to the condensate drain cannot be maintained. A drain tube clip is included in the furnace to prevent kinking/buckling of the drain tube. The clip should remain in the furnace (between the door switch plate and the blower shelf, Fig. 9) during operation. See Fig. 19 for proper routing and installation of the overflow.

DO NOT trap the drain line in any other location than at the condensate drain trap supplied with the furnace.

⚠ CAUTION

FROZEN AND BURST WATER PIPE HAZARD

Failure to follow this caution may result in property damage.

If a condensate pump is installed, a plugged condensate drain or a failed pump may cause the furnace to shut down. Do not leave the home unattended during freezing weather without turning off water supply and draining water pipes or otherwise protecting against the risk of frozen pipes.

If possible, DO NOT route the drain line where it may freeze. The drain line must terminate at an inside drain to prevent freezing of the condensate and possible property damage.

1. A condensate sump pump **MUST** be used if required by local codes, or if no indoor floor drain is available. The condensate pump must be approved for use with acidic condensate.
2. A plugged condensate drain line or a failed condensate pump will allow condensate to spill. If the furnace is installed where a condensate spill could cause damage, it is recommended that an auxiliary safety switch be installed to prevent operation of the equipment in the event of pump failure or plugged drain line. If used, an auxiliary safety switch should be installed in the R circuit (low voltage) **ONLY**.
3. If the auxiliary switch in the condensate pump is used, the furnace may shut down due to a blocked condensate line or failed pump. To prevent frozen water pipes see the "Frozen Water Pipe Hazard" Installation Section of this manual.

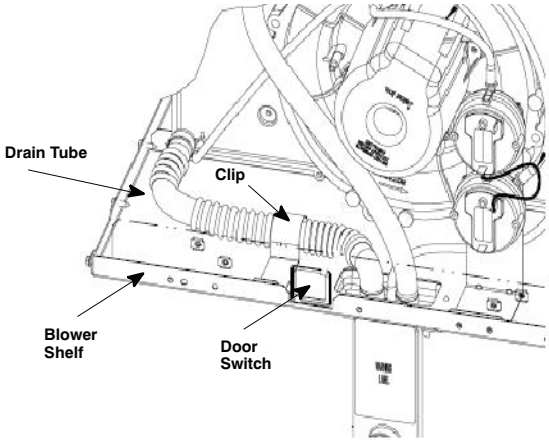

Representative drawing only, some models may vary in appearance.

A07705

Fig. 9 - Drain Tube Clip Location

Condensate Drain Trap Freeze Protection

Special precautions **MUST** be made if installing furnace in an area which may drop below freezing. This can cause improper operation or damage to the equipment. If the the furnace environment has the potential of freezing, the drain trap and drain line must be protected. Use 3 to 6 watt per foot at 115 volt, 40° F (4° C) self-regulating shielded and waterproof heat tape. Wrap the drain trap and drain line with the heat tape and secure with the ties. Follow the heat tape manufacturer's recommendations.

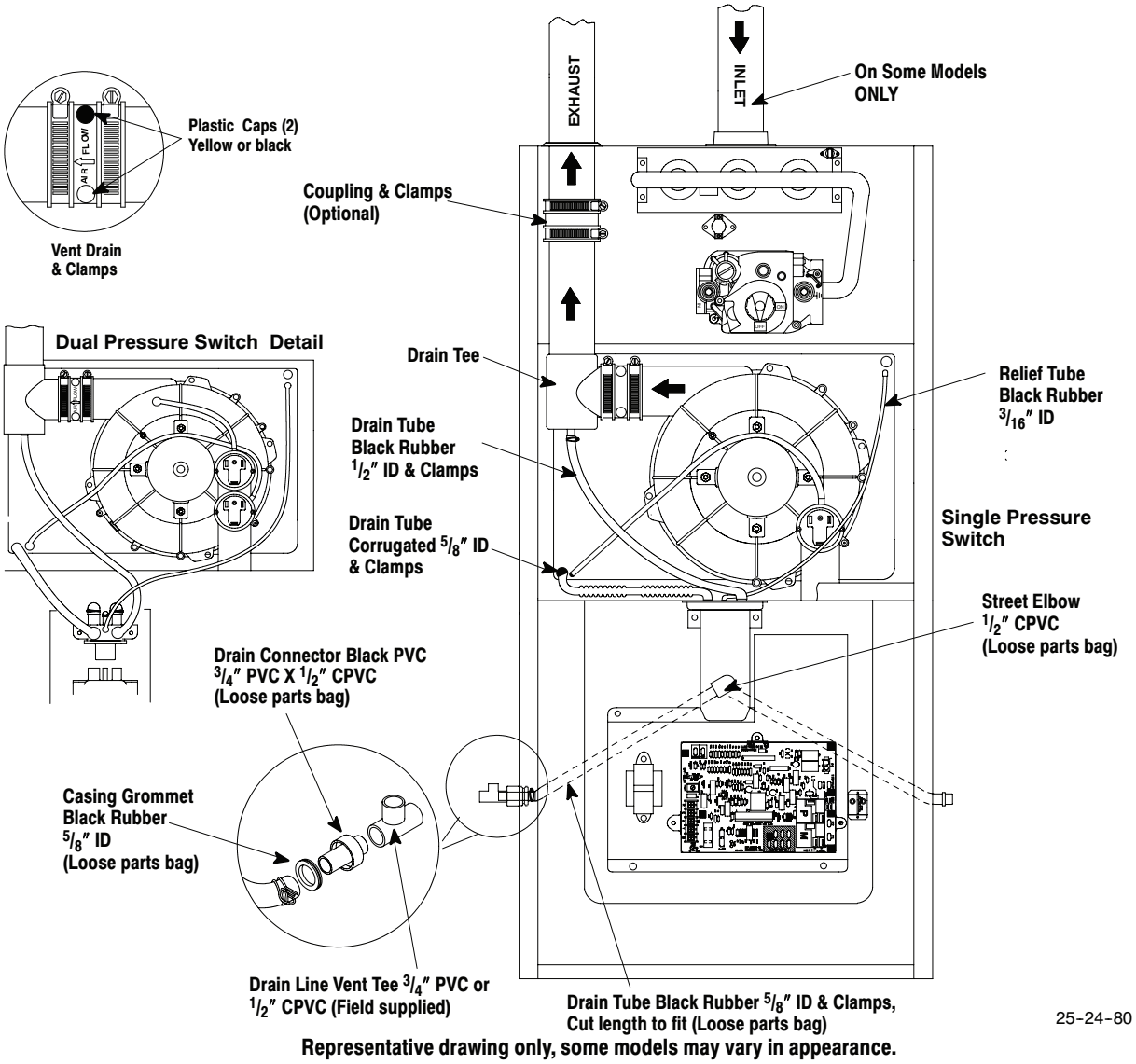

Fig. 10 - Upflow Installations Top Vent

Upflow Installations Top Vent (See Fig. 10)

- Remove knockout from the side of the furnace casing where drain tube will exit.
- Install casing grommet (black rubber $^5/_8$″ (16 mm) ID grommet - in loose parts bag)
- Install the $^1/_2$″(13 mm) CPVC street elbow on discharge of trap
- Install the black PVC tube connector ($^3/_4$″ (18 mm) PVC x $^1/_2$″ (13 mm) CPVC from loose parts bag) as shown in the illustration above.
- Cut the black drain tube ($^5/_8$″(16 mm) ID - in loose parts bag) to length to fit between trap and tube connector through grommet.
- Clamp both ends of the drain tube using clamps provided.
- Glue the CPVC street elbow to the trap using appropriate cleaner and solvent cement.
- The field supplied $^3/_4$″ PVC or $^1/_2$″(13 mm) CPVC drain line vent tee must vent outside the furnace cabinet (see exploded view above).

NOTE: It is recommended that all PVC piping and fitting connections be fit up and inspected before final cementing. **Trap must be primed before operation.** Verify all condensate drain connections are securely clamped. A coupling and clamps (in loose part bag) may be installed as shown for future servicing of the vent system.

NOTE: **"PVC" is used as a generic term. Pipe and fitting materials used must be acceptable to the local code officials having jurisdiction.**

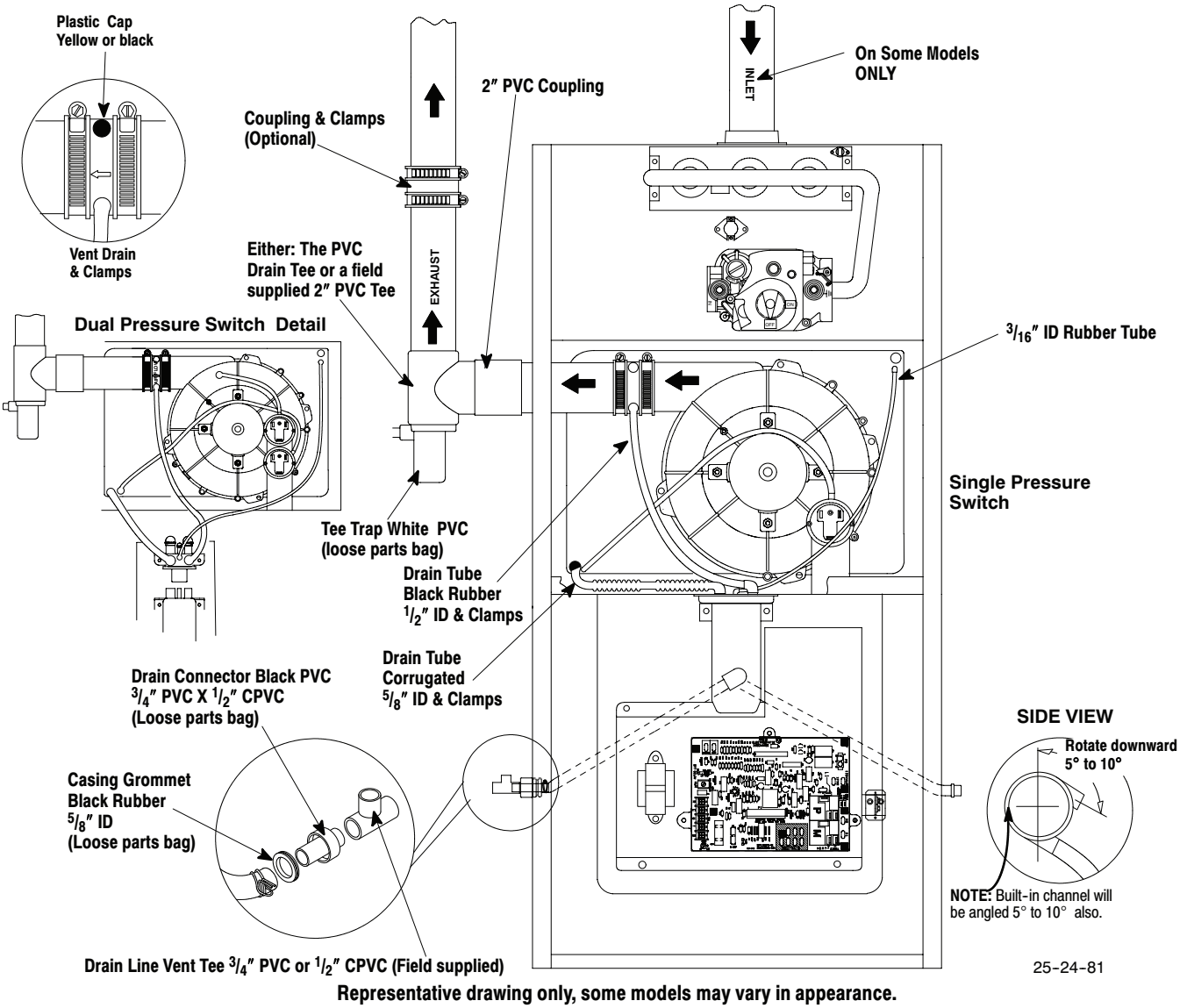

Fig. 11 – Upflow Installations Vent through Left Side

Upflow Installations Vent through Left Side (See Fig. 11)

- Remove drain tee from inducer discharge and remove black drain tube ($^1/_2$″(13 mm) ID) from bottom of drain tee.
- Install Vent Pipe grommet in side of casing.
- Cut an appropriate length of 2″ (51 mm) PVC pipe long enough to exit the cabinet and connect the vent drain to either:
  - — A standard field supplied 2″ (51 mm) PVC tee, or
  - — A 2″ PVC coupling fastened onto the drain tee.
- Install tee trap into bottom of tee.
- Remove knockout from the side of the furnace casing where drain tube will exit.
- Install the $^1/_2$″ (13 mm)CPVC street elbow on discharge of trap
- Install the black PVC drain connector ($^3/_4$″(19 mm) PVC x $^1/_2$″(13 mm) CPVC from loose parts bag) as shown in the illustration above.
- Cut the black drain tube ($^5/_8$″(16 mm) ID – in loose parts bag) to length to fit between trap and tube connector through grommet.
- Clamp both ends of the drain tube using clamps provided.
- Glue the CPVC street elbow to the trap using appropriate cleaner and solvent cement.
- Connect the tee trap and the main drain line exiting the casing as shown in Fig. 19.

NOTE: It is recommended that all PVC piping and fitting connections be fit up and inspected before final cementing. **Both the internal trap and the external tee trap must be primed before operation.** Verify all condensate drain connections are securely clamped. A coupling and clamps (in loose part bag) may be installed as shown for future servicing of the vent system.

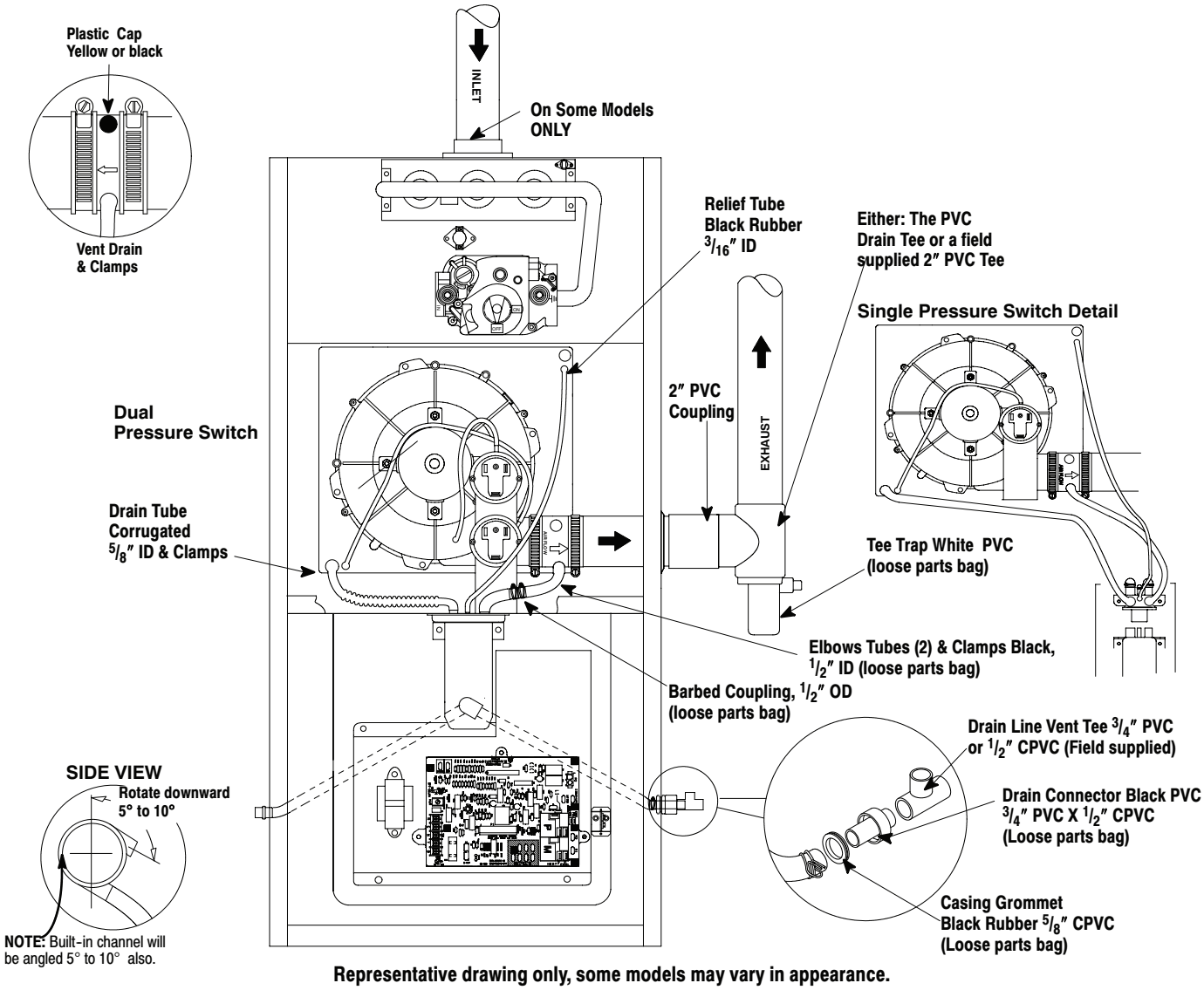

Fig. 12 – All Models Vent Through Right Side

All Models Vent through Right Side (See Fig. 12)

- Disconnect the black drain tube between the drain vent and the trap.
- Rotate the inducer 180° for a right side vent after loosening the 4 inducer attachment screws. Reinstall and retighten the inducer screws to 20″ (2.26 newton meter) pounds torque.
- Using the $^1/_2$″(13 mm) OD barbed coupling in the loose parts bag connect together with the 2 short $^1/_2$″(13 mm) ID elbow tubes and connect the lower discharge port of the vent drain to the trap. Secure all connections with clamps.
- Install the vent pipe grommet into the casing
- Cut an appropriate length of 2″ (51 mm) PVC pipe long enough to exit the cabinet and connect the vent drain to either:
  - — A standard field supplied 2″ (51 mm) PVC tee, or
  - — A 2″ (51 mm) PVC coupling fastened onto the drain tee.
- Install tee trap into bottom section of tee.
- Remove knockout from the side of the furnace casing where drain tube will exit.
- Install casing grommet (black rubber $^5/_8$″(16 mm) ID grommet – in loose parts bag)
- Install the $^1/_2$″(13 mm) CPVC street elbow on discharge of trap
- Install the black PVC tube connector ($^3/_4$″(19 mm) PVC x $^1/_2$″(13 mm) CPVC from loose parts bag) as shown in the illustration above
- Cut the black drain tube ($^5/_8$″(16 mm) ID – in loose parts bag) to length to fit between trap and tube connector through grommet.
- Clamp both ends of the drain tube using clamps provided.
- Glue the CPVC street elbow to the trap using appropriate cleaner and solvent cement.
- Connect the tee trap and the main drain line exiting the casing as shown in Fig. 19.
- Note: It is recommended that all PVC piping and fitting connections be fit up and inspected before final cementing. Both the internal trap and the external tee trap must be primed before operation. Verify all condensate drain connections are securely clamped. A coupling and clamps (in loose part bag) may be installed as shown for future servicing of the vent system.

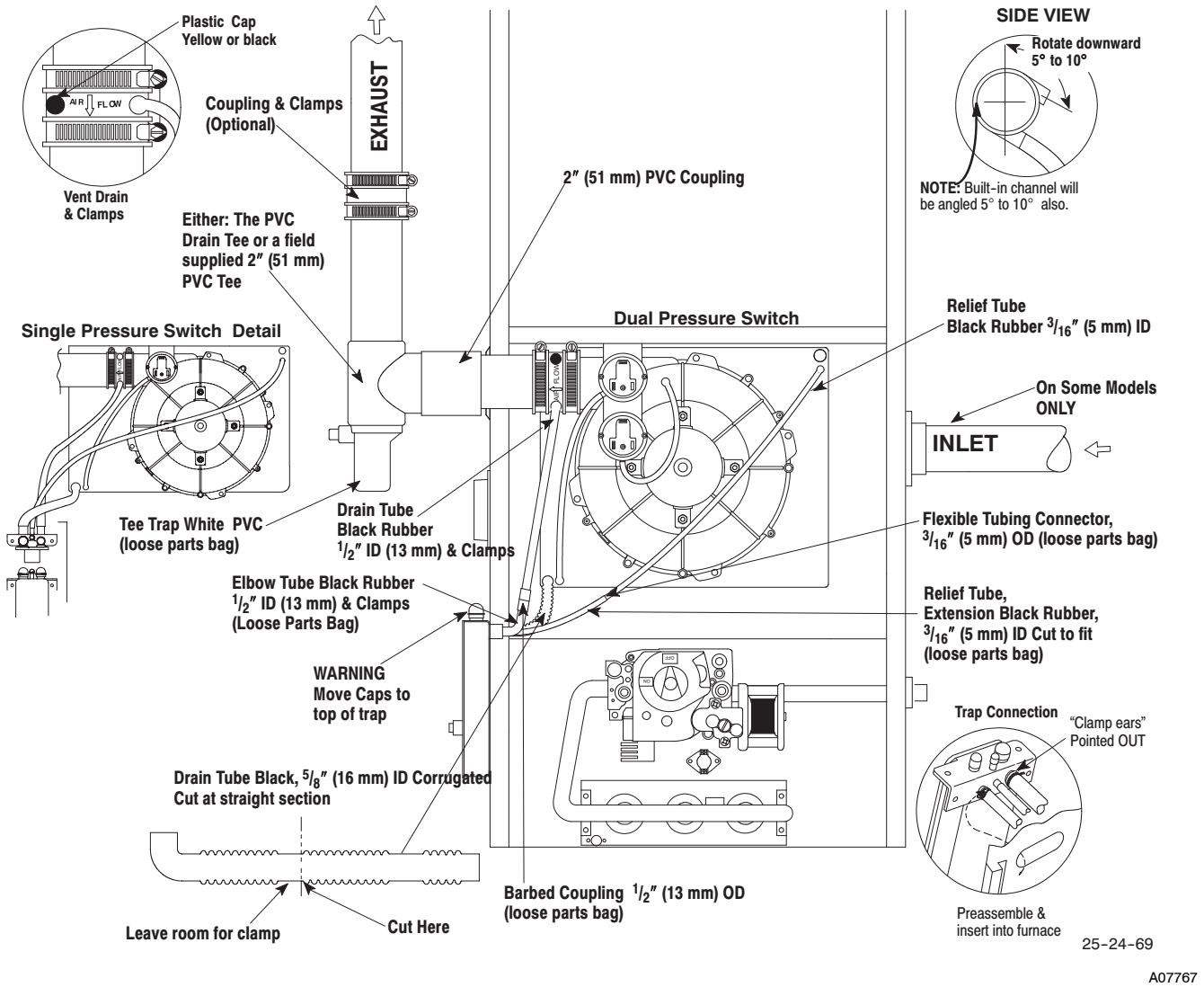

Fig. 13 - Downflow Left-Side Vent and Trap

Downflow Left-Side Vent and Trap (See Fig. 13).

Remove the inducer mounting screws, rotate the inducer 180° and retighten the inducer screws to 20″ (2.26 newton meters) pounds torque.

Disconnect the hoses from the trap assembly, and remove trap and trap mounting bracket from the blower compartment. Using cover plate and gasket provided in the loose parts bag, cover the hole from the burner compartment to the blower compartment and secure with screws.

Move the caps to the top of the trap and mount the trap externally to the left side of the unit using the two(2) screws provided.

Cut the 5/8″ (16 mm) ID corrugated hose as shown above and fasten the 90° bend end to the trap and fasten the straight end to the transition drain. Secure both connections with clamps.

Reconnect the 1/2″ (13 mm) ID drain hose from the vent drain to the trap and secure with a clamp. In some cases, additional length will be required for this hose. Use the Black plastic 1/2″ (13 mm) OD barbed coupling and a suitable section of 1/2″ (13 mm) ID hose to make the connection. Secure all connections with clamps

Connect the 3/16″ (5 mm) ID relief tube from the small port on the trap to the top port of the transition as shown in the picture.

In some cases, additional hose length will be needed. Use the clear plastic 3/16″ (5 mm) OD flexible tubing connector and a suitable length of extra 3/16″ (5 mm) ID hose to make this connection.

Install the vent pipe grommet into the casing

Cut an appropriate length of 2″ (51 mm) PVC pipe long , enough to exit the cabinet and connect the vent drain to either:

- A 2″ (51 mm) PVC coupling fastened onto the drain tee

Install tee trap into bottom section of tee and glue pipe.

Remove knockout from the side of the furnace casing where drain tube will exit.

Connect the tee trap and the main drain line exiting the casing as shown in Fig. 19.

NOTE: It is recommended that all PVC piping and fitting connections be fit up and inspected before final cementing. **Both the external trap and the external tee trap must be primed before operation.** Verify all condensate drain connections are securely clamped. A coupling and clamps (in loose part bag) may be installed as shown for future servicing of the vent system.

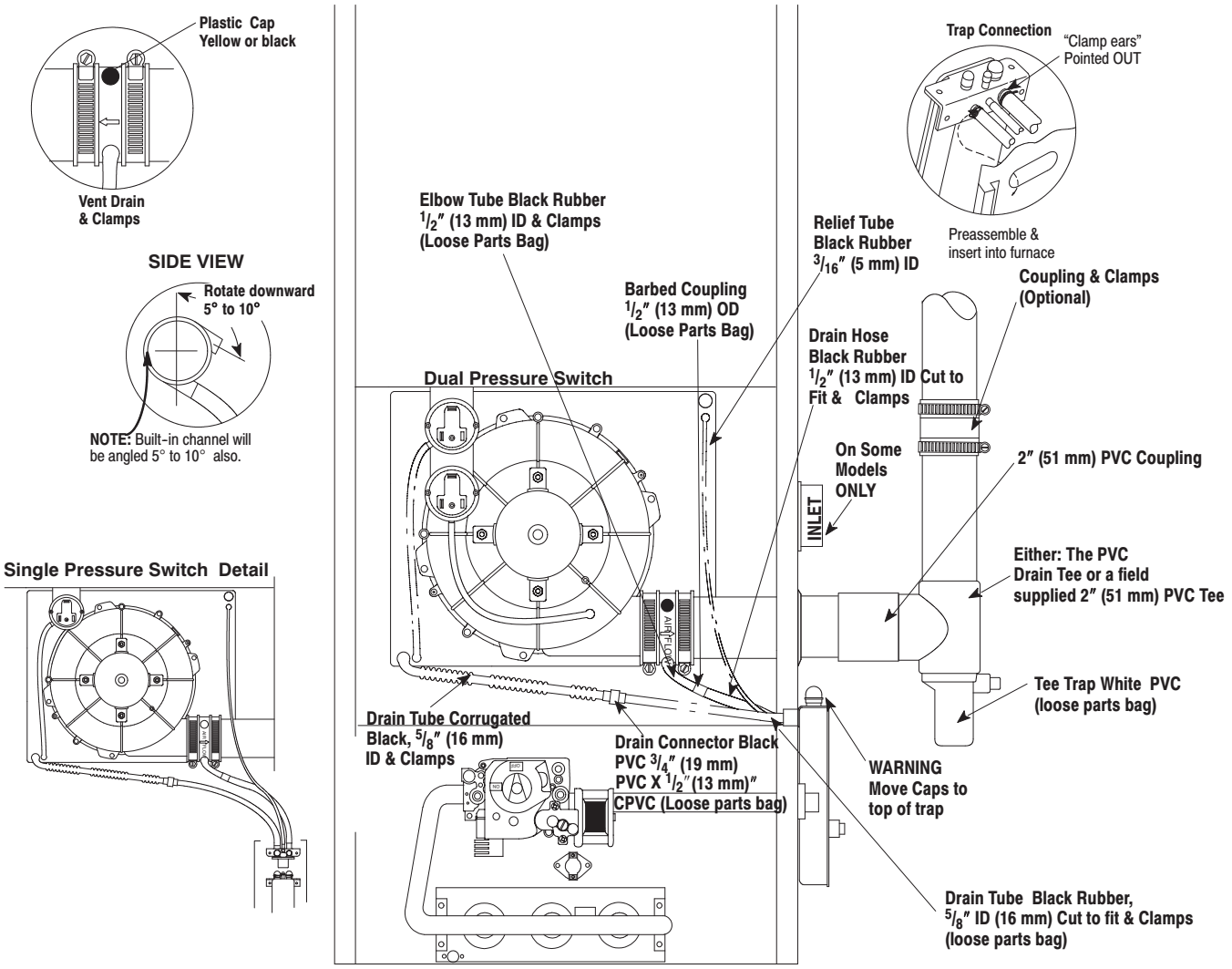

Fig. 14 - Downflow Right-Side Vent and Trap

Downflow Right-Side Vent and Trap (See Fig. 14)

Remove the drain tee if installed.

Disconnect the hoses from the trap assembly, and remove trap and trap mounting bracket from the blower compartment. Using cover plate and gasket provided in the loose parts bag, cover the hole from the burner compartment to the blower compartment and secure with screws.

Move the caps to the top of the trap and mount the trap externally to the right side of the unit using the two(2) screws provided.

Connect the corrugated drain tube from the transition box to the trap as shown. If an extension is required, use the black PVC tube connector and the black 5/8″ (16 mm) ID drain tube in the loose parts bag. Cut tube to length. Secure all connections with clamps.

Connect the drain hose from the Vent Drain to the trap. If an extension is required, use the black 1/2″ (13 mm) OD barbed coupling, connect a black 1/2″ (13 mm) ID elbow tube and a suitable section of a 1/2″ (13 mm) ID drain tube to make connection from the vent drain to the trap. Secure all connections with clamps.

Install the vent pipe grommet into the casing

Cut an appropriate length of 2″ (51 mm) PVC pipe long , enough to exit the cabinet and connect the vent drain to either:

- A 2″ (51 mm) PVC coupling fastened onto the drain tee

Install tee trap into bottom section of tee and glue pipe.

Remove knockout from the side of the furnace casing where drain tube will exit.

Connect the tee trap and the main drain line exiting the casing as shown in Fig. 19.

NOTE: Note: It is recommended that all PVC piping and fitting connections be fit up and inspected before final cementing. **Both the external trap and the external tee trap must be primed before operation.** Verify all condensate drain connections are securely clamped. A coupling and clamps (in loose part bag) may be installed as shown for future servicing of the vent system.

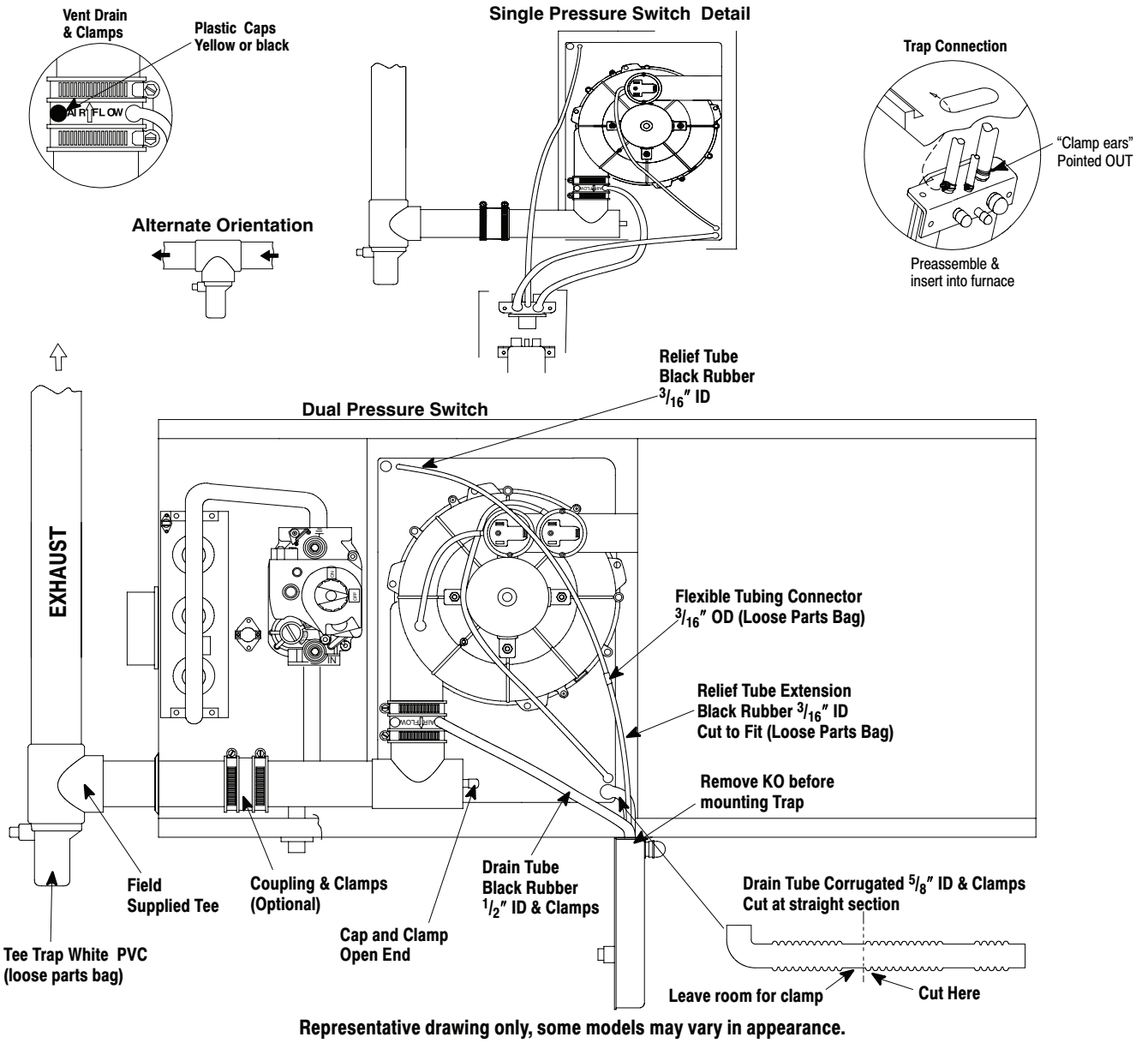

Fig. 15 – Horizontal Left through Top

Horizontal Left through Top (See Fig. 15)

- Disconnect the hoses from the trap assembly, and remove trap and trap mounting bracket from the blower compartment. Using cover plate and gasket provided in the loose parts bag, cover the hole from the burner compartment to the blower compartment and secure with screws.
- Remove knockout from the side of the furnace casing where drain tube will exit.
- Mount the trap externally to the bottom side of the unit using the 2 screws provided in the location shown.
- Cut the corrugated tube as shown in the illustration above. Connect the corrugated hose from the transition to the trap. Secure connections with clamps.
- Remove the black $^1/_2$″(13 mm) ID drain tube from the drain tee. Install a yellow cap and clamp over the open drain port of the drain tee.
- Connect the black $^1/_2$″(13 mm) ID drain tube from the Vent Drain to the trap. Secure connections with clamps.
- Connect the $^3/_{16}$″(5 mm) ID relief tube to the middle port on the trap. If an extension is required, use the $^3/_{16}$″(5 mm) OD flexible tubing connector and the black $^3/_{16}$″(5 mm) ID relief tube in the loose parts bag. Cut tube to length. Secure all connections with clamps.
- Cut an appropriate length of 2″ (51 mm) PVC pipe, long enough to exit the cabinet and connect the vent drain to either:
  - — A standard field supplied 2″ (51 mm) PVC tee, or
  - — A 2″ (51 mm) PVC coupling fastened onto the drain tee.
- Install tee trap into bottom section of tee.
- Connect the tee trap and the main drain line exiting the casing as shown in Fig. 19.

NOTE: It is recommended that all PVC piping and fitting connections be fit up and inspected before final cementing. **Both the external trap and the external tee trap must be primed before operation.** Verify all condensate drain connections are securely clamped. A coupling and clamps (in loose part bag) may be installed as shown for future servicing of the vent system.

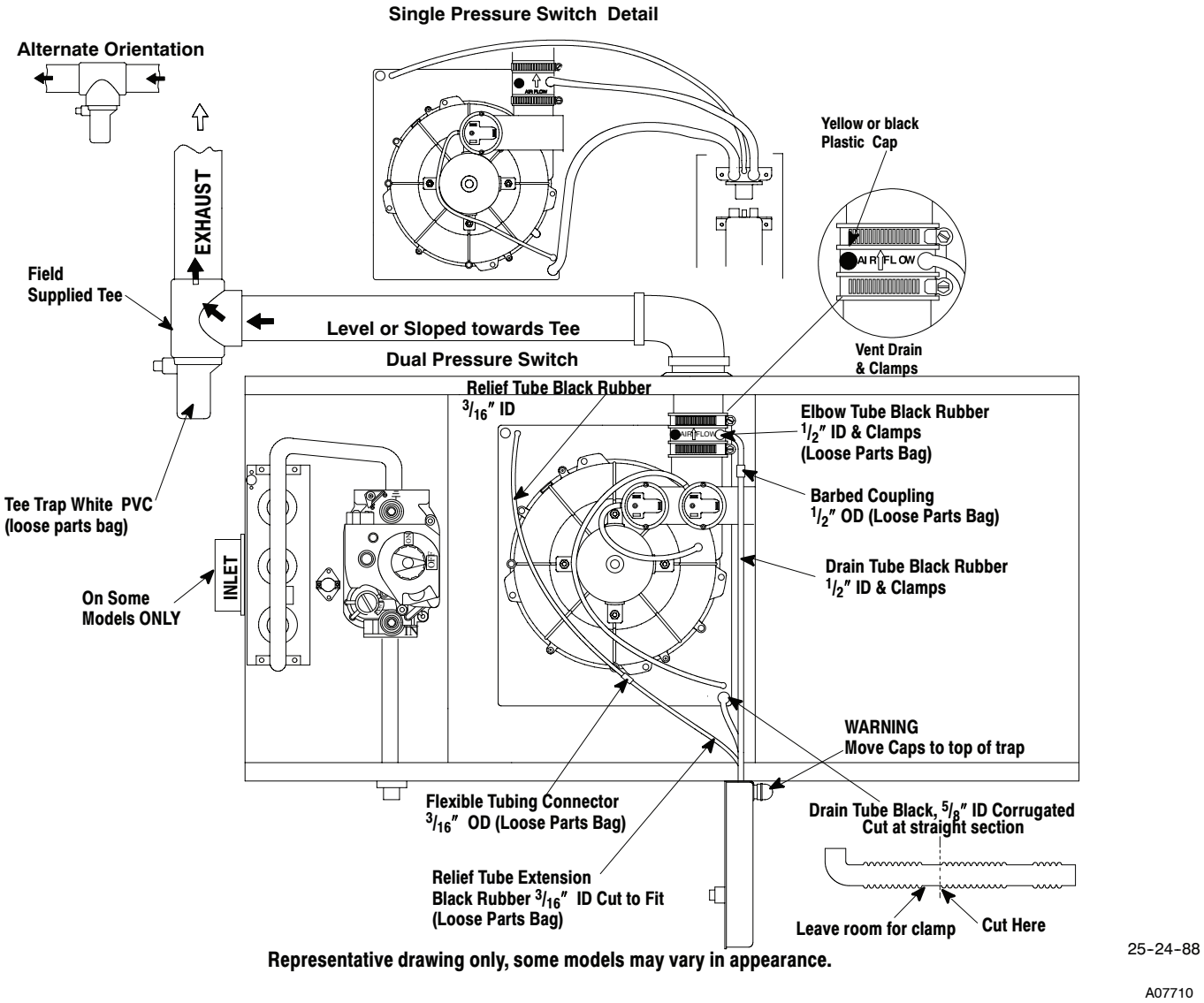

Fig. 16 - Horizontal Left-Side Vent

Horizontal Left-Side Vent (See Fig. 16)

- Remove the drain tee from the Vent Drain if installed.
- Rotate the inducer 180° for a side vent after loosening the 4 inducer attachment screws. Reinstall and retighten the inducer screws to 20″ (2.26 newton meters) pounds torque.
- Disconnect the hoses from the trap assembly, and remove trap and trap mounting bracket from the blower compartment. Using cover plate and gasket provided in the loose parts bag, cover the hole from the burner compartment to the blower compartment and secure with screws.
- Remove knockout from the side of the furnace casing where drain tube will exit.
- Mount the trap externally to the bottom side of the unit using the 2 screws provided in the location shown.
- Cut the corrugated tube as shown in the illustration above. Connect the corrugated hose from the transition to the trap. Secure connections with clamps.
- Connect the black $^1/_2$″(13 mm) ID drain tube from the Vent Drain to the trap. If an extension is required, use the black $^1/_2$″(13 mm) OD flexible tubing connector and the black $^1/_2$″(13 mm) ID drain tube in the loose parts bag. Cut tube to length. Secure connections with clamps.
- Connect the $^3/_{16}$″(5 mm) ID relief tube to the middle port on the trap. If an extension is required, use the $^3/_{16}$″OD flexible tubing connector and the black $^3/_{16}$″(5 mm) ID relief tube in the loose parts bag. Cut tube to length.
- Cut an appropriate length of 2″ (51 mm) PVC pipe, fittings and extension pipe long enough to exit the cabinet and connect the vent drain to either:
  - — A standard field supplied 2″ (51 mm) PVC tee, or
  - — A 2″ (51 mm) PVC coupling fastened onto the drain tee.
- Install tee trap into bottom section of tee.
- Important: The pipe to the tee trap must be level or sloping towards the tee trap
- Connect the tee trap and the main drain line exiting the casing as shown in Fig. 19.

NOTE: It is recommended that all PVC piping and fitting connections be fit up and inspected before final cementing. Both the external trap and the external tee trap must be primed before operation. Verify all condensate drain connections are securely clamped. A coupling and clamps (in loose part bag) may be installed as shown for future servicing of the vent system.

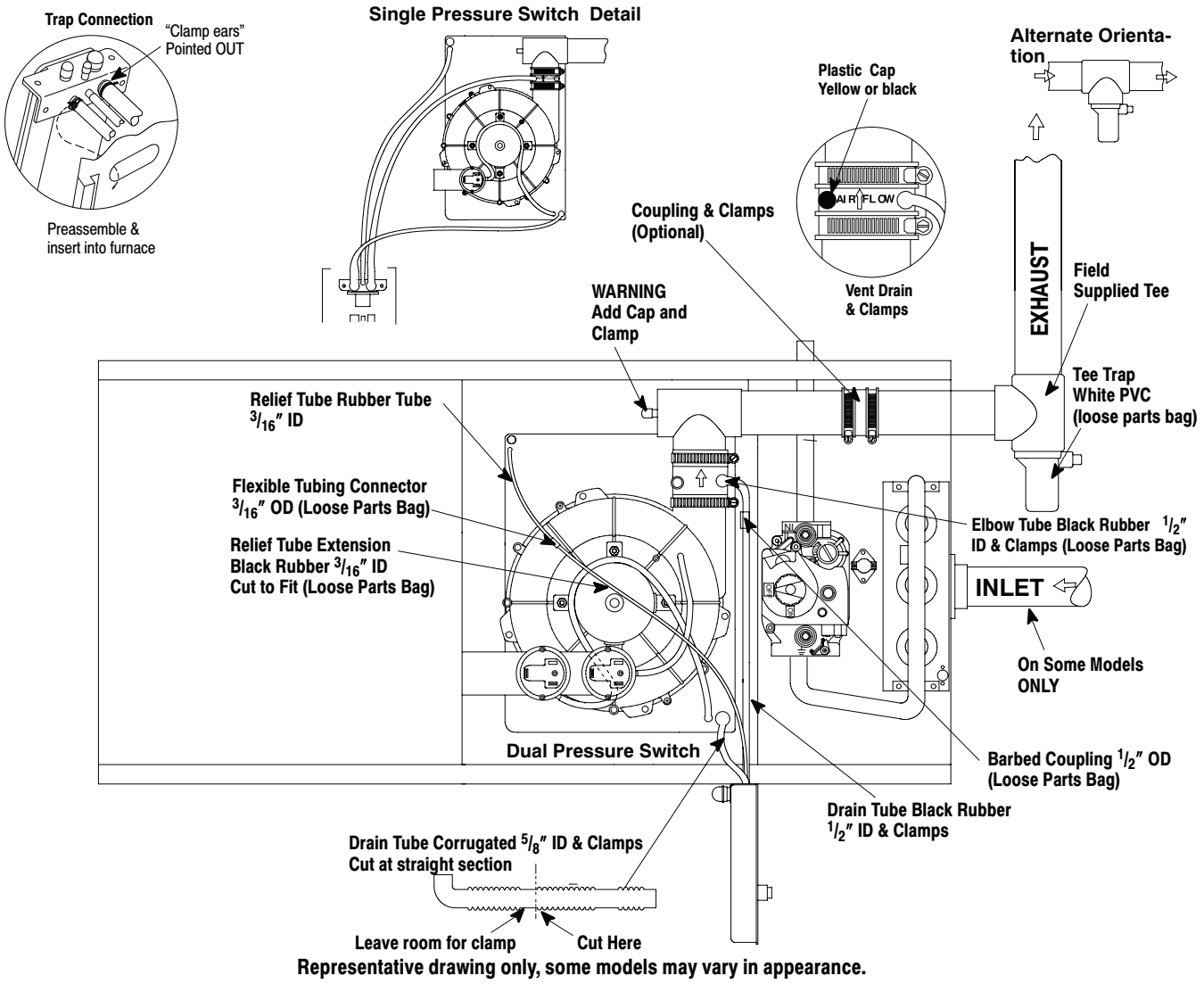

Fig. 17 - Horizontal Right through Top

Horizontal Right through Top (See Fig. 17)

- Disconnect the hoses from the trap assembly, and remove trap and trap mounting bracket from the blower compartment. Using cover plate and gasket provided in the loose parts bag, cover the hole from the burner compartment to the blower compartment and secure with screws.
- Remove knockout from the side of the furnace casing where drain tube will exit.
- Mount the trap externally to the bottom side of the unit using the 2 screws provided in the location shown.
- Cut the corrugated tube as shown in the illustration above. Connect the corrugated hose from the transition to the trap. Secure connections with clamps.
- Connect the black $^1/_2$″ (13 mm) ID drain tube from the Vent Drain to the trap. If an extension is required, use the black $^1/_2$″ (13 mm) OD barbed coupling and the black $^1/_2$″(13 mm) ID drain tube in the loose parts bag. Cut tube to length. Secure connections with clamps.
- Connect the $^3/_{16}$″ (5 mm) ID relief tube to the middle port on the trap. If an extension is required, use the clear $^3/_{16}$″(5 mm) OD flexible tubing connector and the black $^3/_{16}$″(5 mm) ID relief tube in the loose parts bag. Cut tube to length.
- Cut an appropriate length of 2″ (51 mm) PVC pipe, fittings and extension pipe long enough to exit the cabinet and connect the vent drain to a standard field supplied 2″ (51 mm) PVC tee
- Install tee trap into bottom section of tee.
- Connect the tee trap and the main drain line exiting the casing as shown in Fig. 19.

NOTE: It is recommended that all PVC piping and fitting connections be fit up and inspected before final cementing. Both the external trap and the external tee trap must be primed before operation. Verify all condensate drain connections are securely clamped. A coupling and clamps (in loose part bag) may be installed as shown for future servicing of the vent system.

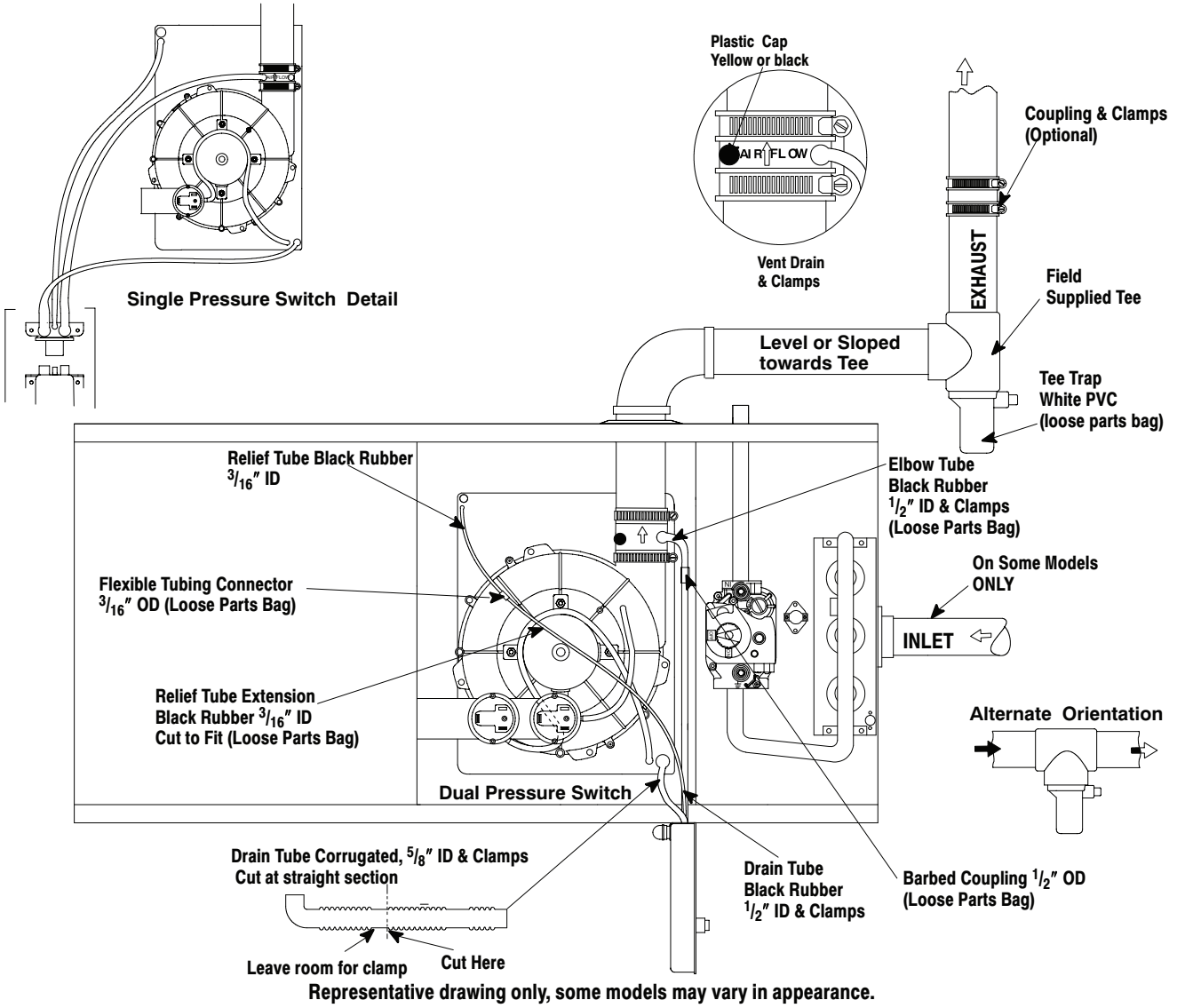

Fig. 18 - Horizontal Right Side Vent

Horizontal Right Side Vent (See Fig. 18)

- Disconnect drain tee if installed
- Disconnect the hoses from the trap assembly, and remove trap and trap mounting bracket from the blower compartment. Using cover plate and gasket provided in the loose parts bag, cover the hole from the burner compartment to the blower compartment and secure with screws.
- Remove knockout from the side of the furnace casing where drain tube will exit.
- Mount the trap externally to the bottom side of the unit using the 2 screws provided in the location shown.
- Cut the corrugated tube as shown in the illustration above. Connect the corrugated hose from the transition to the trap. Secure connections with clamps.
- Connect the black $^1/_2$″(13 mm) ID drain tube from the Vent Drain to the trap. If an extension is required, use the $^1/_2$″(13 mm) OD barbed coupling and the black $^1/_2$″(13 mm) ID drain tube in the loose parts bag. Cut tube to length. Secure connections with clamps.
- Connect the $^3/_{16}$″ (5 mm) ID relief tube to the middle port on the trap. If an extension is required, use the clear $^3/_{16}$″OD splice connector and the black $^3/_{16}$″(5 mm) ID relief tube in the loose parts bag. Cut tube to length.
- Cut an appropriate length of 2″ (51 mm) PVC pipe, fittings and extension pipe long enough to exit the cabinet and connect the vent drain to either:
  - — A standard field supplied 2″ (51 mm) PVC tee, or
  - — A 2″ (51 mm) PVC coupling fastened onto the drain tee.
- Install tee trap into bottom section of tee.
- Important: The pipe to the tee trap must be level or sloping towards the tee trap.
- Connect the tee trap and the main drain line exiting the casing as shown in Fig. 19.

NOTE: It is recommended that all PVC piping and fitting connections be fit up and inspected before final cementing. **Both the external trap and the external tee trap must be primed**

before operation. Verify all condensate drain connections are securely clamped. A coupling and clamps (in loose part bag) may be installed as shown for future servicing of the vent system.

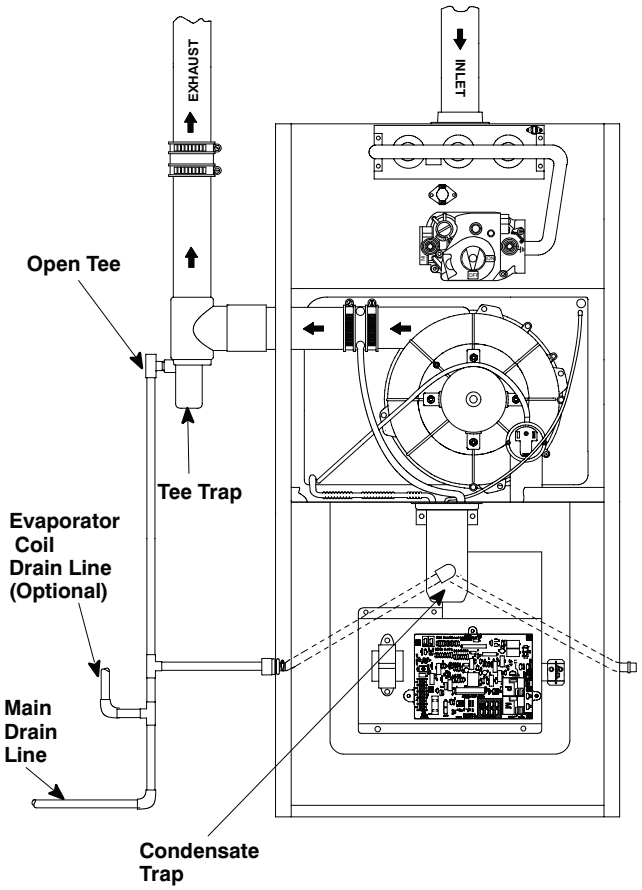

Representative drawing only, some models may vary in appearance.

A07713

Fig. 19 - Connecting Tee Trap to Condensate Trap and Main Drain Line

The tee trap must be connected to the main condensate drain line as conceptually shown above. Different installations may require slightly different orientations. The following steps apply to all installations.

1. The tee trap should be installed as close to the side or top of the furnace as practical. Minimize the distance between the inducer and the tee trap as much as possible.
2. An open tee is to be used at the tee trap discharge. The top end of the tee should be open to the atmosphere to eliminate potential air lock problems.
3. The drain line from the tee trap is to be connected to the furnace condensate trap drain line as shown above.
4. Condensate drain lines from a cooling coil may be connected downstream of the connection point of the tee trap and furnace condensate trap.

IMPORTANT: **Prime both traps with water before operation.** Failure to prime the traps may result in discharge of flue gases from the condensate drain line and open tee for a period of time, and may result in temporary lockout of the furnace upon start up. Main drain line construction is left to the discretion of the installer. It may be made of either rigid pipe or flexible tube. Tube ID should NOT be less than $^1/_2$″.

Connecting Vent and Combustion Air Piping

⚠ WARNING

CARBON MONOXIDE POISONING HAZARD

Failure to follow this warning could result in personal injury or death.

Cement or mechanically seal all joints, fittings, etc. to prevent leakage of flue gasses.

Refer to Fig. 10 through Fig. 18 that corresponds to the installation position of the furnace for the application.

Preassemble the vent and combustion air piping from the furnace to the vent termination. Do not cement the pipe joints until the pipe preassembly process is complete.

Combustion Air Pipe Connection (Dual Certified or Direct Vent)

Install the air intake coupling and gasket to the furnace with the four(4) screws:

NOTE: The air intake coupling and gasket can be installed to the top panel, or to the alternate air intake locations on either the left or right side panels of the furnace.

For downflow installation, the air intake coupling and gasket must be installed to the alternate air intake location on either the left or right side panels. Remove the 3” (76 mm) hole plug from the furnace accessory bag and relocate to the open hole in the furnace panel. Use four screws to seal the four mounting holes in the top panel next to the hole plug. Drill four 7/64” (3 mm) diameter holes in the casing using the air intake coupling as the template.

The air intake coupling is sized for 2″ (51 mm) PVC pipe.

Install the combustion air pipe to the air intake coupling using RTV sealant to provide for future serviceability.

Vent Pipe Connection

Install the vent pipe grommet to the furnace panel. Locate the grommet in the furnace panel at a location directly away from the vent fitting on the combustion blower. The grommet snaps into the 3″ (76 mm) hole on the furnace panel. NOTE: Depending on the installation position, the vent pipe grommet will be installed to the top panel or to the alternate location on the side panels. If needed, remove the 3″ (76 mm) hole plug from the loose parts bag and relocate to the open hole in the furnace panel. (See Fig. 10 or Fig. 19.)

Install the vent pipe to the rubber coupling, the vent fitting or the PVC vent extension pipe. Securely attach using the clamp or PVC cement as required.

NOTE: The vent fitting MUST be installed with the air flow marking arrow pointed toward the vent pipe. (See Fig. 20.) Some installations require the vent fitting to be installed with a 5° to 10° downward slope. (See Fig. 10 through Fig. 19.)

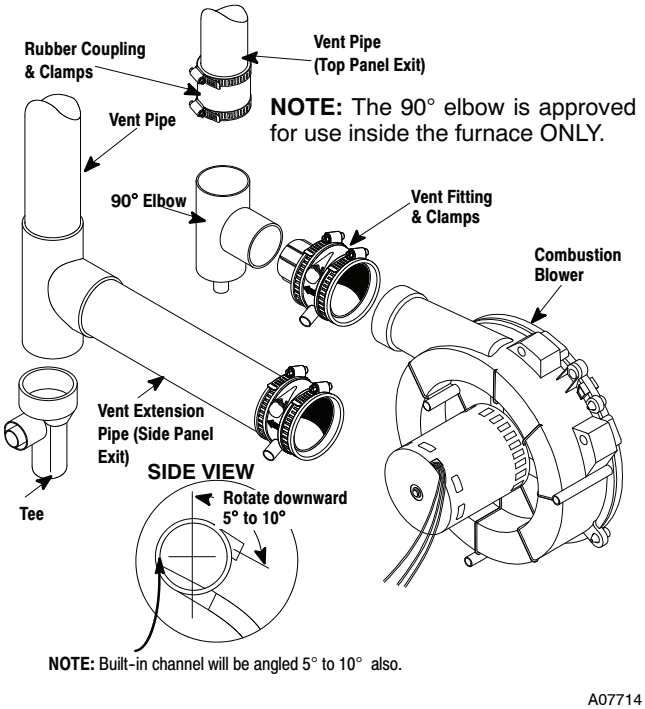

Fig. 20 - Proper Sealing Procedure for Combustion Blower

PG9YAB

Joining Pipe and Fittings

SEE VENT AND COMBUSTION AIR PIPING, vent and Combustion Air Piping Guidelines in this manual for applicable ASTM Standards for vent materials.

⚠ WARNING

FIRE HAZARD

Failure to follow this warning could result in personal injury, death, and/or property damage.

Observe all cautions and warnings printed on material containers.

Provide adequate ventilation and do NOT assemble near heat source or open flame. Do NOT smoke while using solvent cements and avoid contact with skin or eyes.

⚠ WARNING

CARBON MONOXIDE POISONING HAZARD

Failure to follow this warning could result in personal injury or death.

Do NOT use solvent cement that has become curdled, lumpy or thickened and do NOT thin. Observe precautions printed on containers. For applications below 32°F (0°C), use only low temperature type solvent cement. Poor joints may lead to disconnected or leaking vent pipe joints allowing carbon monoxide to enter the living space.

1. Cut pipe end square, remove ragged edges and burrs. Chamfer end of pipe, then clean fitting, socket and pipe joint of all dirt, grease, or moisture.

NOTE: Stir the solvent cement frequently while using. Use a natural bristle brush or the dauber supplied with the cement. The proper brush size is one inch.

2. After checking pipe and socket for proper fit, wipe socket and pipe with cleaner-primer. Apply a liberal coat of primer to inside surface of socket and outside of pipe. Do **NOT** allow primer to dry before applying cement.
3. Apply a thin coat of cement evenly in the socket. Quickly apply a heavy coat of cement to the pipe end and insert pipe into fittings with a slight twisting movement until it bottoms out.

NOTE: Cement **MUST** be fluid while inserting pipe. If **NOT,** recoat pipe.

4. Hold the pipe in the fitting for 30 seconds to prevent the tapered socket from pushing the pipe out of the fitting.
5. Wipe all excess cement from the joint with a rag. Allow 15 minutes before handling. Cure time varies according to fit, temperature and humidity.

Connecting Vent Pipes and Termination (Direct Vent)

NOTE: For direct vent applications, combustion air intake and vent **MUST** terminate in the same atmospheric pressure zone. If installation is in a cold climate (sustained temperatures 0°F (-18°C)and below for 24 or more consecutive hours), increase the minimum distance between vent pipe and air intake from 8″ to 18″ (203 to 457 mm).

1. Install all couplings, nipples and elbows using proper procedures for **Joining Pipe and Fittings** and maintain spacing between vent and combustion air piping as indicated in Fig. 21 through Fig. 23.

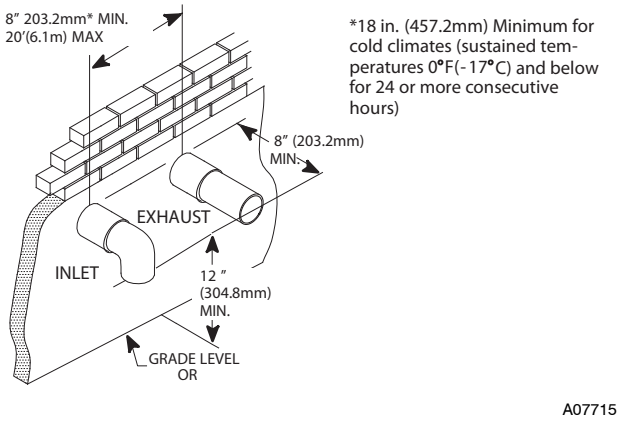

Fig. 21 - Sidewall Termination 12” (305 mm) or More Above Snow Level or Grade Level

Horizontal Termination

1. Cut two holes. 2-$^1/_2$″ (64 mm) for 2″ (51 mm) pipe, 3″ (76 mm) for 2-$^1/_2$″ (64 mm) pipe, or 3$^1/_2$″ (89 mm) for 3″ (76 mm) pipe. Do **NOT** make the holes oversized, or it will be necessary to add a sheet metal or plywood plate on the outside with the correct size hole in it.
2. Check hole sizes by making sure it is smaller than the couplings or elbows that will be installed on the outside. The couplings or elbows **MUST** prevent the pipe from being pushed back through the wall.
3. Extend vent pipe and combustion air pipe through the wall $^3/_4$″ (19 mm) to 1″ (25 mm) and seal area between pipe and wall.
4. Install the couplings, nipple and termination elbows as shown and maintain spacing between vent and combustion air piping as indicated in Fig. 21 and Fig. 22.

A metal shield is recommended 18″ x 18″ (457 mm x 457 mm) min. or 18″ (457 mm) min. diameter around the vent termination at the exterior wall to protect the house exterior materials from flue product or condensation (freezing) damage.

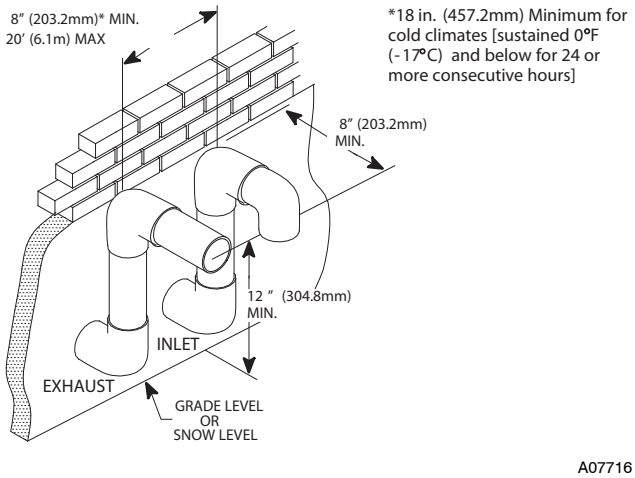

Fig. 22 - Sidewall Termination with Exterior Risers to Get Above Snow Level or Grade Level

Using Exterior Risers

1. Install elbows and pipe to form riser as shown in Fig. 22.
2. Secure vent pipe to wall with galvanized strap or other rust resistant material to restrain pipe from moving.
3. Insulate pipe with Armaflex or equivalent moisture resistant closed cell foam insulation or fiberglass insulation if boxed in and sealed against moisture.

Vent Termination Shielding

Under certain wind conditions some building materials may be affected by flue products expelled in close proximity to unprotected surfaces. Sealing or shielding of the exposed surfaces with a corrosion resistant material (such as aluminum sheeting) may be required to prevent staining or deterioration. The protective material should be attached and sealed (if necessary) to the building before attaching the vent terminal.

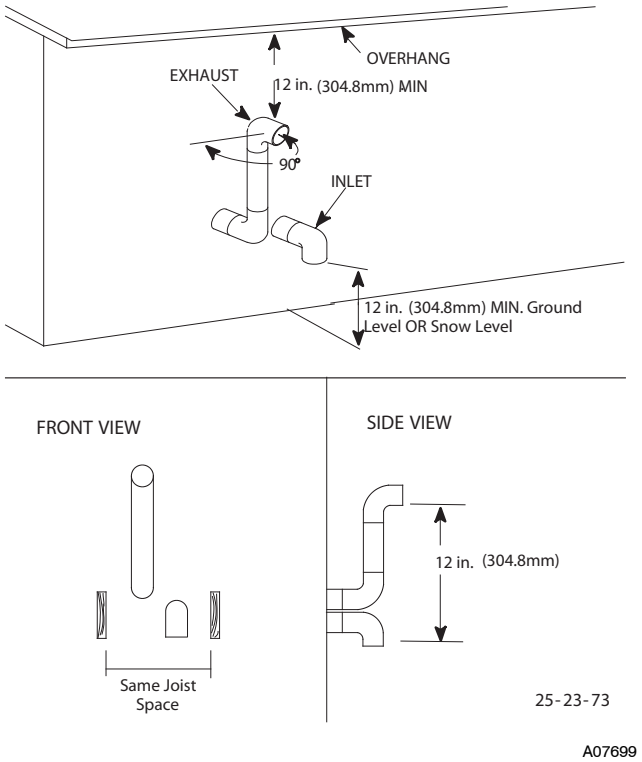

Fig. 23 - Recommended Alternate Installation for Sustained Cold Weather (0°F & below for 24 or more consecutive hours)

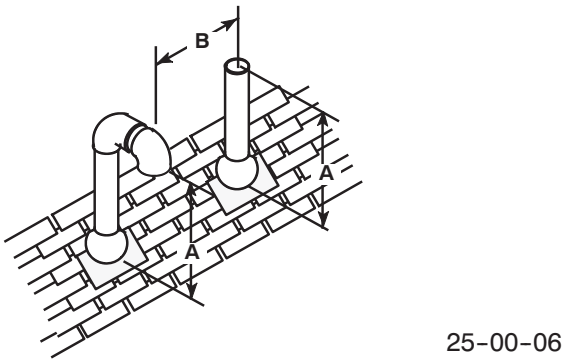

A = 12″ (304.8mm) Above roof or snow accumulation level
B = 8″ (203.2mm) Min., 20′ (6.1m) Maximum, except in areas with extreme cold temperatures [sustained 0°F(-17°C) and below for 24 or more consecutive hours], the 18″ (457.2mm) Min.

A07717

Fig. 24 - Rooftop Termination

Vertical Termination

1. Fig. 24 shows the proper installation and clearances for vertical vent termination. The vertical roof termination should be sealed with a plumbing roof boot or equivalent flashing. The inlet of the intake pipe and end of the exhaust vent must be terminated no less than 12″ (305 mm) above the roof or snow accumulation level, and 12″ (305 mm) away from a vertical wall or other protrusion.
2. If the vent system is installed in an existing chimney make sure clearances shown in Fig. 23 are maintained. Horizontal section before the termination elbow can be extended on the inlet air to provide necessary clearance.

Multi Vent Termination Clearances

When two (2) or more furnaces are vented near each other, each furnace must be individually vented.

Two (2) vent terminations may be installed as shown in Fig. 25, 26, 27, 28 and 29, but the next vent termination must be at least 36″ (914 mm) away from first 2 terminations. It is important that vent terminations be made as shown to avoid recirculation of flue gases.

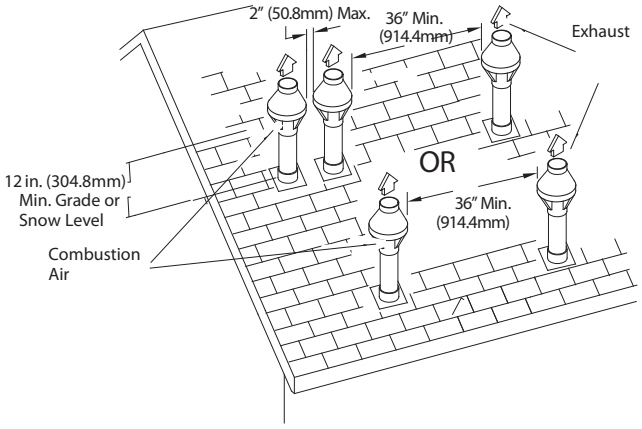

A07718

Fig. 25 - Concentric Vent and Combustion-Air Roof Termination

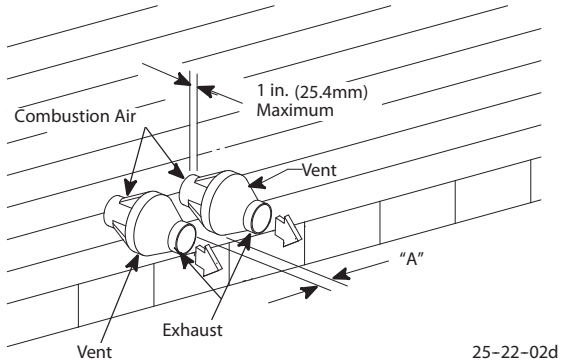

Dimension "A" is touching or 2 in. (503.8mm) maximum separation.

A07695

Fig. 26 - Concentric Vent and Combustion Air Sidewall Termination

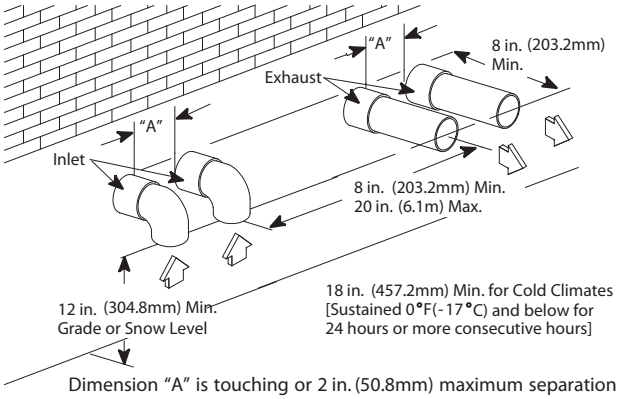

Dimension "A" is touching or 2 in. (50.8mm) maximum separation

A07696

Fig. 27 - Sidewall Inlet Vent and Exhaust-Air Termination

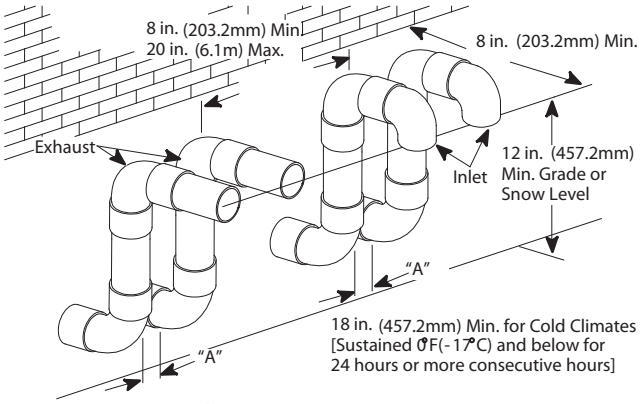

Dimension "A" is touching or 2 in. (503.8mm) maximum separation.

A07697

Fig. 28 - Sidewall Inlet Vent and Exhaust-Air Termination with Exterior Risers

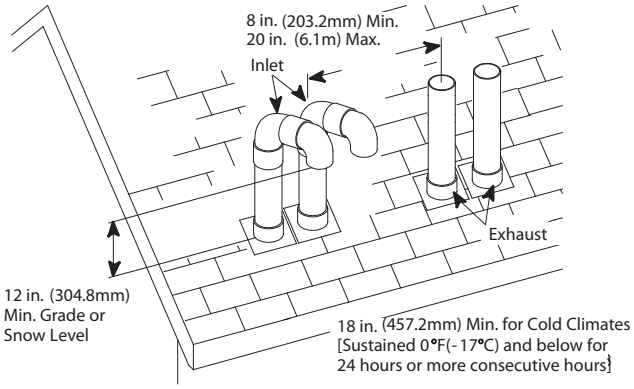

A07698

Fig. 29 - Rooftop Inlet Vent and Exhaust-Air Termination

CONCENTRIC TERMINATION

Vent Termination Clearances

⚠ WARNING

CARBON MONOXIDE POISONING, FIRE AND EXPLOSION HAZARD

Failure to follow this warning could result in personal injury, death, or property damage.

Inlet and outlet pipes may NOT be vented directly above each other (standard vent terminals).

1. Determine termination locations based on clearances specified in following steps and as shown in Fig. 7**,** Fig. 30 through Fig. 35.
2. The vent termination must be located at least 12″ (305 mm) above ground or normally expected snow accumulation levels.
3. Do **NOT** terminate over public walkways. Avoid areas where condensate may cause problems such as above planters, patios, or adjacent to windows where steam may cause fogging.
4. The vent termination shall be located at least 4′ (1.2 M) horizontally from any electric meter, gas meter, gas regulator, and any relief equipment. These distances apply **ONLY** to U.S. installations.
5. The vent termination is to be located at least 3′ (.91 M) above any forced air inlet located within 10′ (3.1 M); (3.1 M) and at least 10′ (3.1 M) from a combustion air intake of another appliance, except another direct vent furnace intake.
6. In Canada, the *Canadian Fuel Gas Code* takes precedence over the preceding termination instructions.

Concentric Vent Termination - Kit # KGAVT0701CVT & KGAVT0801CVT

These kits are for vertical or horizontal termination of the combustion air inlet and the exhaust vent pipes on Category IV gas–fired condensing furnaces. The KGAVT0801CVT kit can be used for 3″ (76 mm) diameter pipe systems. The KGAVT0701CVT kit can be used for 2″ (51 mm) diameter pipe system. Refer to Table 4 for the correct pipe size for the furnace. Both the combustion air inlet and the exhaust vent pipes must attach to the termination kit. The termination kit must terminate outside the structure and must be installed per the instructions outlined below for vertical or horizontal termination. Vertical termination is preferred. Field supplied pipe and fittings are required to complete the installation.

Vertical & Horizontal Termination

1. Determine the pipe diameters required for the installation from Table 4 and Fig. 32.
2. Determine the best location for the termination kit. See Fig. 31 for vertical termination or Fig. 35 for horizontal termination. Roof termination is preferred since it is less susceptible to damage, has reduced intake contaminants and less visible vent vapor. For side wall termination, consideration should be given to: 1) possible damage from the vapors to plants/shrubs, other equipment and building materials, 2) possible damage to the terminal from foreign objects, 3) wind effects that may cause recirculation of flue products, debris or light snow and 4) visible vent vapor.
3. Cut one 5″ (127 mm) diameter hole through the structure for the KGAVT0801CVT Kit or one 4″ (102 mm) diameter hole for the KGAVT0701CVT Kit .

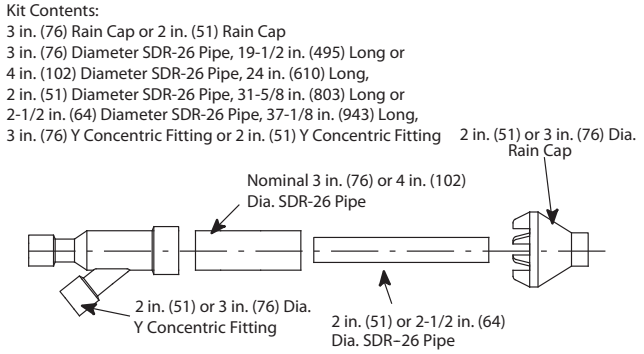

Fig. 30 - Kit Components

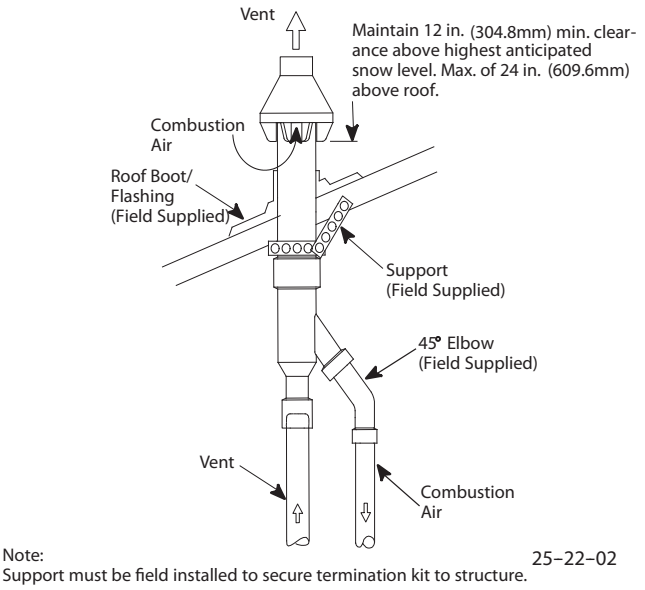

Fig. 31 - Concentric Vent Roof Installation

4. Dimension D may be lengthened to 60″ (1524 mm) max. or shortened by cutting the pipes to 12″ (305 mm) min. Dimension A will change according to D dimension. (See Fig. 32).
5. Partially assemble the concentric vent termination kit. Clean and cement the parts using the procedures for Joining Pipe and Fittings section of the manual. A) Cement the Y Concentric fitting to the longest of the two straight kit pipes. (See Fig. 30) B) Cement the rain cap to the shortest of the straight kit parts. (See Fig. 30).

NOTE: A field supplied stainless steel screw may be used to secure the rain cap to the pipe instead of cementing when field disassembly is desired for cleaning (See Fig. 33).

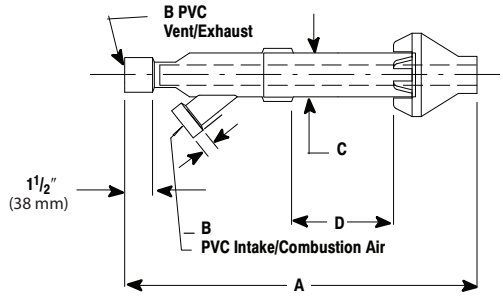

Model	A*	B	C	D**
KGAVT0801CVT	$38^7/_8$	3	$4^1/_2$	$21^1/_8$
KGAVT0701CVT	$33^3/_8$	2	$3^1/_2$	$16^5/_8$

* = Dimension will change accordingly as dimension D is lengthened or shortened.

**= Dimension D may be lengthened to 60″ may also be shortened by cutting the pipes provided in the kit to 12″ minimum.

A09195

Fig. 32 - Concentric Vent Dimensional Drawing

Table 4 – Concentric Termination Kit

Concentric Termination Kit KGAVT0801CVT & KGAVT0701CVT Venting Table for PG9YAB Models
60,000 Btuh Furnaces
KGAVT0701CVT – 5′ & (3) 90° elbows with 2″ (51 mm) PVC pipe or **KGAVT0701CVT – 35′** & (4) 90° elbows with 2″ (51 mm) PVC pipe or **KGAVT0801CVT – 65′** & (4) 90° elbows with 3″ (76 mm) PVC pipe
80,000 Btuh Furnace
KGAVT0701CVT – 35′ & (4) 90° elbows with 2″ (51 mm) PVC pipe or **KGAVT0801CVT – 35′** & (4) 90° elbows with 3″ (76 mm) PVC pipe
100,000 Btuh Furnace
KGAVT0701CVT – 5′ & (2) 90° elbows with 2″ (51 mm) PVC pipe or **KGAVT0801CVT – 35′** & (4) 90° elbows with 3″ (76 mm) PVC pipe
1. Do not include the field supplied 45° elbow in the total elbow count. **2. If more elbows are required, reduce the length of both the inlet and the exhaust pipes five feet for each additional elbow used.** **3. Elbows are DWV long radius type for 2″ (51 mm) and 3″ (76 mm) vents.** **NOTE: Feet of pipe is whichever pipe run is the longest, either inlet *or* outlet side.**

If assembly needs to be extended to meet height or side wall thickness requirement, the two pipes supplied in the kit may be replaced by using the same diameter solid, single (no coupling connections) field supplied SDR-26 PVC (ASTM D2241) pipes. Do not extend dimension D more than 60″ (1524 mm). (See Fig. 32).

Do not use field supplied couplings to extend the pipes. Airflow restriction will occur and the furnace pressure switch may cause intermittent operation.

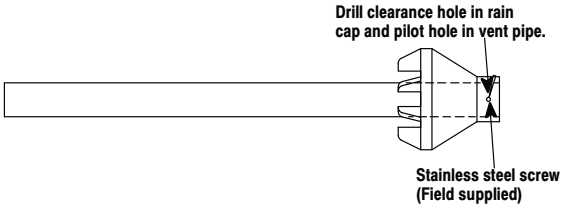

A07722

Fig. 33 - Rain Cap to Vent Pipe Assembly

⚠ WARNING

CARBON MONOXIDE POISONING HAZARD

Failure to follow this warning could result in personal injury or death.

When using the alternate screw assembly method, drill a clearance hole in the rain cap and a pilot hole in the vent pipe for the screw size being used. Failure to drill adequate holes may cause cracking of the PVC components, allowing flue gasses to be recirculated.

6. Install the Y concentric fitting and the pipe assembly through the structure's hole. For vertical termination, install the parts through the field supplied roof boot/flashing.

NOTE: Do not allow insulation or other materials to accumulate inside the pipe assembly when installing through the structure's hole.

⚠ WARNING

CARBON MONOXIDE POISONING HAZARD

Failure to follow this warning could result in personal injury or death.

Do not operate the furnace with the rain cap removed as recirculating of the flue gasses may occur. Water may also collect inside the larger combustion air pipe and flow to the burner enclosure.

7. Secure the assembly to the structure as shown in Fig. 31 or Fig. 35 using field supplied metal strapping or equivalent material.

NOTE: Ensure the termination height is above the roof surface or anticipated snow level as shown in Fig. 31 for vertical termination. Ensure the termination location clearance dimensions are as shown in Fig. 34 and Fig. 35 for horizontal termination.

8. Install the rain cap and the small diameter pipe assembly in the Y concentric fitting and the large pipe assembly. Ensure that the small diameter pipe is bottomed out and securely cemented in the Y concentric fitting.

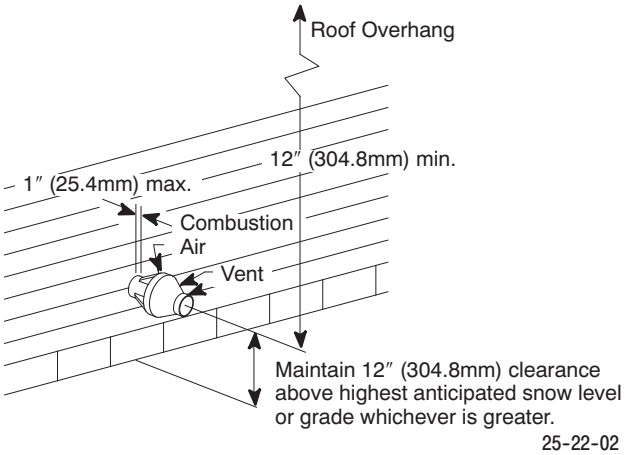

A07736

Fig. 34 - Concentric Vent and Combustion-Air Side Termination

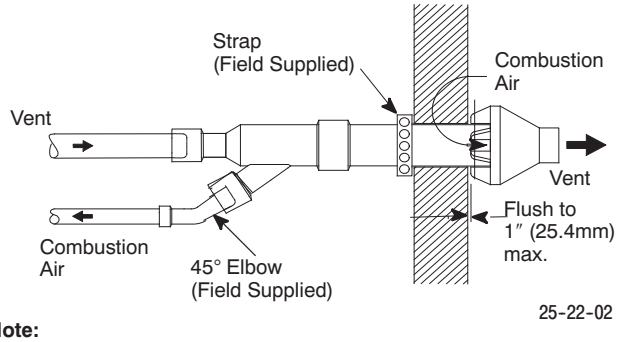

Note:
Securing strap must be field installed to prevent movement of termination kit in side wall.

A07723

Fig. 35 - Concentric Vent Sidewall Attachment

9. Cement the furnace combustion air and vent pipes to the concentric vent termination assembly. See Fig. 34 or Fig. 35 for proper pipe attachment.
10. Operate the furnace through one heat cycle to ensure combustion air and vent pipes are properly connected to the concentric termination connections.

GAS SUPPLY AND PIPING

⚠ WARNING

FIRE AND EXPLOSION HAZARD

Failure to follow this warning could result in personal injury, death, and/or property damage.

Models designated for Natural Gas are to be used with Natural Gas ONLY, unless properly converted to use with Propane gas.

NOTE: The rating plate is stamped with the model number, gas type and gas input rating. In addition, models manufactured for sale in Canada have orifice size information stamped on the rating plate.

Gas Supply Requirements

Gas supply pressure should be within minimum and maximum values listed on rating plate. Pressures are usually set by gas suppliers.

(See Propane Gas Conversion Kit instruction manual for furnaces converted to Propane gas)

- Use only the Type of gas approved for this furnace. See rating plate for approved gas type.
- A $^1/_8$″ NPT plugged tapping, accessible for a test gauge connection,must be installed immediately upstream of the gas supply connection to furnace.
- Gas supply pressure should be within minimum and maximum values listed on rating plate. Pressures are usually set by gas suppliers.
- Gas input must not exceed the rated input shown on the rating plate. Overfiring will result in failure of heat exchanger and cause dangerous operation.
- Do not allow minimum supply pressure to vary downward. Doing so will decrease input to furnace. Refer to Table 5 for Gas supply. Refer to Table 6 or 7 for manifold pressures.

Table 5 – Gas Pressures

Gas Type	Supply Pressure		
	Recommended	Max.	Min.
Natural	7 in. w.c. (1744 Pa)	14 in. w.c. (3487 Pa)	4.5 in. w.c. (1121 Pa)
Propane	11in. w.c. (2740 Pa)	14 in. w.c. (3487 Pa)	11in. w.c. (2740 Pa)

Gas Piping Requirements

NOTE: The gas supply line must be installed by a qualified service technician in accordance with all building codes.

NOTE: In the state of Massachusetts.

a. Gas supply connections MUST be performed by a licensed plumber or gas fitter.
b. When flexible connectors are used, the maximum length shall not exceed 36″(914 mm).
c. When lever handle type manual equipment shutoff valves are used, they shall be T-handle valves.
d. The use of copper tubing for gas piping is NOT approved by the state of Massachusetts.

1. Install gas piping in accordance with local codes, or in the absence of local codes, the applicable national codes. Refer to the current edition of NFPA 54/ANSI Z223.1 for proper gas pipe size.
2. It is recommended that a manual equipment shutoff valve be installed in the gas supply line outside the furnace. Locate valve as close to the furnace as possible where it is readily accessible. Refer to Fig. 36 .
3. Use black iron or steel pipe and fittings or other pipe approved by local code.
4. Use pipe thread compound which is resistant to natural and Propane gases.
5. Use ground joint unions and install a drip leg no less than 3″ long to trap dirt and moisture before it can enter gas control valve inside furnace.

NOTE: Refer to Fig. 36 and Fig. 37 for the general layout at the furnace. The rules listed apply to natural and Propane gas pipe installations.

NOTE: Install the gas pipe grommet to the furnace side panel with the gas pipe entry. If needed, remove the 2” (51 mm) hole plug from the plastic accessory bag and relocate to the open hole in the furnace side panel.

6. Use two pipe wrenches when making connections to prevent gas valve from turning.

7. Install a manual shut-off valve external to furnace casing and tighten all joints securely.
8. If local codes allow the use of flexible gas appliance connectors, always use a new listed connector.
   Do not use a connector which has previously serviced another gas appliance.
9. Flexible corrugated metal gas connector may **NOT** be used inside the furnace or be secured or supported by the furnace or ductwork.
10. Properly size gas pipe to handle combined appliance load or run gas pipe directly from gas meter or Propane gas regulator.
11. Install correct pipe size for run length and furnace rating.
12. Measure pipe length from gas meter or Propane second stage regulator to determine gas pipe size.

PG9YAB

Additional Propane Connection Requirements

1. Have a licensed Propane gas dealer make all connections at storage tank and check all connections from tank to furnace.
2. If copper tubing is used, it **MUST** comply with limitation set in National Fuel Gas Code or CGA codes.
3. Two-stage regulation of Propane gas is recommended.

Propane Conversion

⚠ WARNING

FIRE, EXPLOSION HAZARD

Failure to follow this warning could result in personal injury or death.

A Propane conversion accessory kit is required when operating the furnace with Propane gas.

An accessory kit shall be used to convert to propane gas use, see the furnace rating plate for the Propane conversion accessory kit part number.

Supply Pressure

⚠ WARNING

FIRE HAZARD

Failure to follow this warning could result in personal injury or death.

Do NOT set input rating above that shown on rating plate.

1. A $^1/_8$″ NPT plugged tapping, accessible for a test gauge connection, must be installed immediately upstream of the gas supply connection to the furnace.
2. Gas input to burners **MUST NOT** exceed the rated input shown on rating plate.
3. Do **NOT** allow minimum gas supply pressure to vary downward. Doing so will decrease input to furnace. Refer to Table 6 and 7 for normal gas supply and manifold pressures.

Manifold Gas Pressure Adjustment

SEE CHECKS AND ADJUSTMENTS, Manifold Gas Pressure Adjustment in this manual.

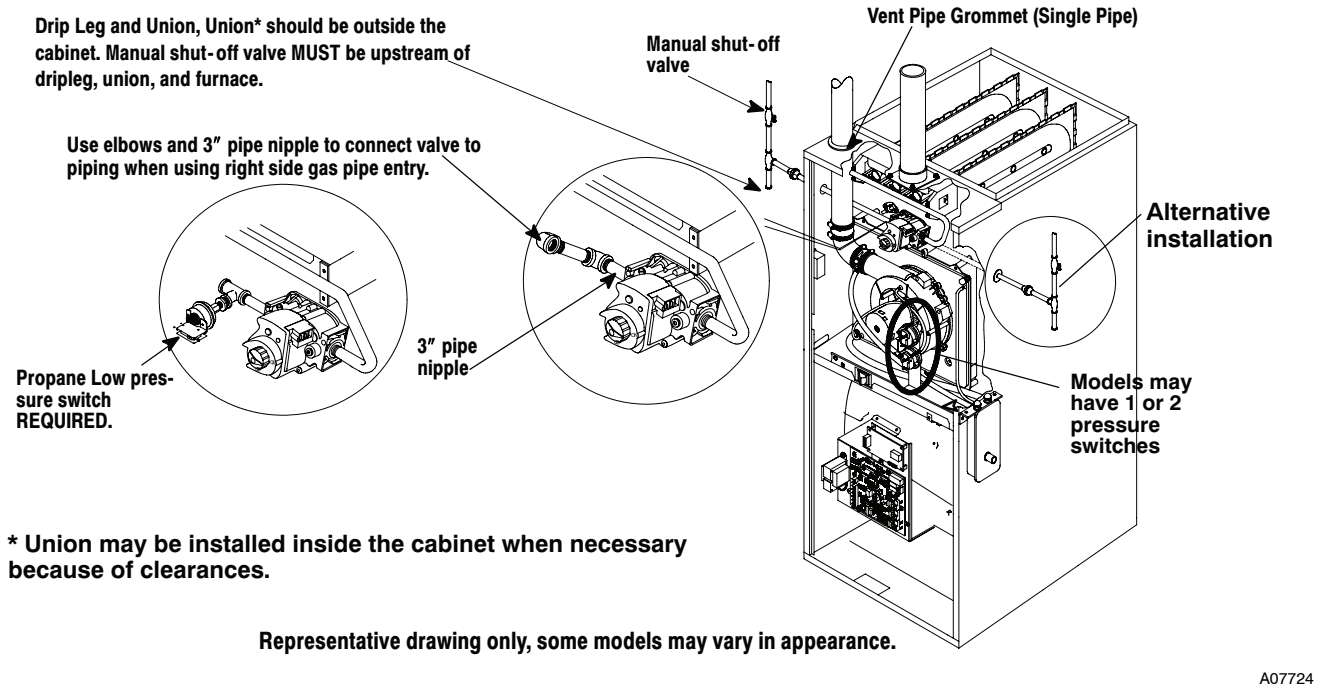

Fig. 36 – Typical Gas Piping for Upflow

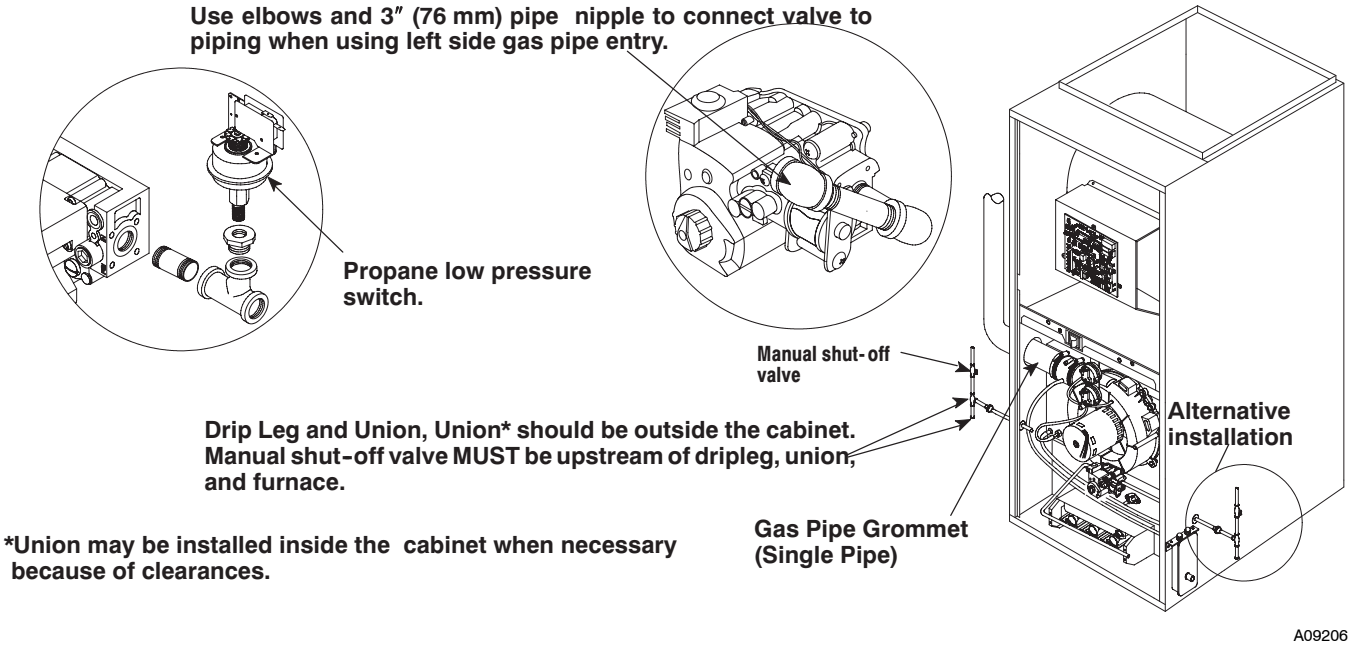

Fig. 37 – Typical Gas Piping for Downflow

Table 6 – Natural Gas Manifold Pressure (in wc) 20,000 BTU per Burner*

HEATING VALUE BTU/CU. FT.	MEAN ELEVATION FEET ABOVE SEA LEVEL Ft. (M)													
	0 to 2000		2001 to 3000†		3001 to 4000		4001 to 5000		5001 to 6000		6001 to 7000		7001 to 8000	
	(0 to 610)		(610.1 to 914)†		(914.1 to 1219)		(1219.1 to 1524)		(1524.1 to 1829)		(1829.1 to 2134)		(2134.1 to 2438)	
	Orifice	Mnfld Press	Orifice	Mnfld Press	Orifice	Mnfld Press	Orifice	Mnfld Press	Orifice	Mnfld Press	Orifice	Mnfld Press	Orifice	Mnfld Press
700	––	––	––	––	––	––	––	––	––	––	––	––	**44**	**3.7**
725	––	––	––	––	––	––	––	––	––	––	**44**	**3.7**	**44**	**3.4**
750	––	––	––	––	––	––	––	––	––	––	**44**	**3.5**	**44**	**3.2**
775	––	––	––	––	––	––	––	––	**44**	**3.5**	**44**	**3.2**	**44**	**3.0**
800	––	––	––	––	––	––	**44**	**3.6**	**44**	**3.3**	**44**	**3.0**	**44**	**2.8**
825	––	––	––	––	**44**	**3.7**	**44**	**3.4**	**44**	**3.1**	**44**	**2.9**	**44**	**2.6**
850	––	––	––	––	**44**	**3.5**	**44**	**3.2**	**44**	**2.9**	**44**	**2.7**	**44**	**2.5**
875	––	––	**44**	**3.5**	**44**	**3.3**	**44**	**3.0**	**44**	**2.8**	**44**	**2.5**	47	3.4
900	––	––	**44**	**3.3**	**44**	**3.1**	**44**	**2.8**	**44**	**2.6**	47	3.5	48	3.6
925	**44**	**3.7**	**44**	**3.2**	**44**	**2.9**	**44**	**2.7**	**44**	**2.5**	48	3.7	48	3.4
950	**44**	**3.5**	**44**	**3.0**	**44**	**2.8**	**44**	**2.6**	47	3.4	48	3.5	48	3.3
975	**44**	**3.3**	**44**	**2.8**	**44**	**2.6**	47	3.5	48	3.7	48	3.4	49	3.6
1000	**44**	**3.2**	**44**	**2.7**	**44**	**2.5**	47	3.3	48	3.5	48	3.2	49	3.4
1050	**44**	**2.9**	**44**	**2.5**	48	3.7	48	3.4	49	3.7	––	––	––	––
1100	46	3.3	48	3.7	48	3.4	49	3.7	––	––	––	––	––	––

* When installing the 100,000 BTU furnace in downflow or horizontal positions, firing rate is reduced to 19,500 BTU/cell. Subtract 0.2" w.c from the manifold pressures listed in table above for the correct manifold pressure.

Conversion: 1 in wc = 249 Pa

Bold– indicates factory orifice size.

NOTE: Natural gas data is based on 0.60 specific gravity. For fuels with different specific gravity consult the National Fuel Gas Code ANSI Z223.1–2009/NFPA 54–2009 or National Standard of Canada, Natural Gas And Propane Installation Code CSA B149.1–10.

In the USA, derating of these furnaces at 2% (Natural Gas) and 4% (Propane Gas) has been tested and design–certified by CSA.

†**In Canada**, the input rating must be derated 5% (Natural Gas) and 10% (Propane Gas) for altitudes of 2,000 to 4,500 (609.6 to 1371.6m) above sea level. Use the 2001 to 3000 (609.9 to 914.4m) column in Tables 6 and 7.

Table 7 – LPG or Propane Gas Manifold Pressure (in wc)*

HEATING VALUE BTU/CU. FT.	FURNACE INPUT BTU/ BURNER	MEAN ELEVATION FEET ABOVE SEA LEVEL Ft (M)						
		0 to 2000	2001 to 3000†	3001 to 4000	4001 to 5000	5001 to 6000	6001 to 7000	7001 to 8000
		(0 to 610)	(610.1 to 914)†	(914.1 to 1219)	(1219.1 to 1524)	(1524.1 to 1829)	(1829.1 to 2134)	(2134.1 to 2438)
2500	20000	10.0	8.9	8.4	10.0	10.0	10.0	10.0
Orifice Size		**#55**	**#55**	**# 55**	**#56**	**#56**	**#56**	**#56**
2500	19500‡	9.9	8.4	8.0	10.0	10.0	10.0	9.6
Orifice Size		**#55**	**#55**	**# 55**	**#56**	**#56**	**#56**	**#56**

‡ Applies to 100,000 BTU models when installed in the downflow or horizontal applications

Conversion: 1 in wc = 249 Pa

NOTE: Propane data is based on 1.53 specific gravity. For fuels with different specific gravity consult the National Fuel Gas Code ANSI Z223.1–2009/NFPA 54–2009 or National Standard of Canada, Natural Gas and Propane Installation Code CSA B149.1–10.

In the USA, derating of these furnaces at 2% (Natural Gas) and 4% (Propane Gas) has been tested and design–certified by CSA.

†**In Canada**, the input rating must be derated 5% (Natural Gas) and 10% (Propane Gas) for altitudes of 2,000 to 4,500 (609.6 to 1371.6m) above sea level. Use the 2001 to 3000 (609.9 to 914.4m) column in Tables 6 and 7.

The burner orifice part nos. are as follows:

Orifice #41	333730-701
Orifice #42	333730-702
Orifice #43	333730-703
Orifice #44	333730-704
Orifice #45	333730-705
Orifice #46	333730-709
Orifice #47	333730-710
Orifice #48	333730-711
Orifice #49	333730-712
Orifice #54	333730-706
Orifice #55	333730-707
Orifice #56	333730-708

General Derating Rules

1. These furnaces may be used at full input rating when installed at altitudes up to 2,000′ (610 M). When installed above 2,000′ (610 M), the input must be decreased 2% (natural) or 4% (Propane) for each 1000′ (305 M) above sea level in the USA. In Canada, the input rating must be derated 5% (natural) or 10% (Propane) for each 1000′ (305 M) above sea level. See Table 6 or 7 for required high altitude input rate.
2. For operation with natural gas at altitudes above 2,000′ (610 M), orifice change and/or manifold pressure adjustments may be required for the gas supplied. First consult

your local gas supplier, then refer to Table 6 for required pressure change and/or orifice change for high altitudes.

3. For operation with Propane gas, gas orifices **MUST** be changed and manifold pressure **MUST** be *maintained* as per Table 7 . Orifices can be ordered through our distributor. (See Fig. 38).

High Altitude Input Rate = Nameplate Sea Level Input Rate x (Multiplier) [USA]		
Elevation	High Altitude Multiplier	
	Natural Gas	Propane Gas
2001′ - 3000′	0.95	0.90
3001′ - 4000′	0.93	0.86
4001′ - 5000′	0.91	0.82
5001′ - 6000′	0.89	0.78
6001′ - 7000′	0.87	0.74
7001′ - 8000′	0.85	0.70

* Based on mid−range of elevation.

High Altitude Air Pressure Switch

Altitudes over 4,000′ (1219 M) may require a different air pressure switch than the one installed at the factory. Check parts list for pressure switch and consult your distributor for part number and availability. In Canada, provincial codes may govern installation of switch. Check with governing authorities.

Changing Orifices for High Altitude

⚠ WARNING

ELECTRICAL SHOCK, FIRE OR EXPLOSION HAZARD

Failure to follow this warning could result in personal injury, death, and/or property damage.

Turn OFF electric power (at disconnect) and gas supply (at manual valve in gas line) when installing orifices. Lockout and tag with appropriate label. Installation of orifices requires a qualified service technician.

NOTE: Main burner orifices can be changed for high altitudes.

1. Disconnect gas line from gas valve.
2. Remove manifold from furnace.
3. Remove the orifices from the manifold and replace them with properly sized orifices.
4. Tighten orifices so it is seated and gas tight. (See Fig. 38)
5. Reinstall manifold. Ensure burners do **NOT** bind on new orifices.

Natural Gas Input Rating Check

SEE CHECKS AND ADJUSTMENTS, Natural Gas Input Rating Check in this manual.

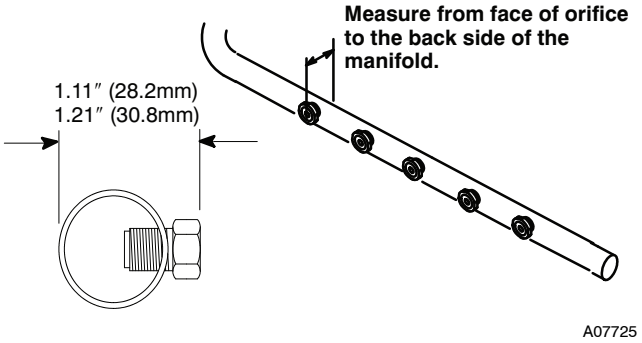

Fig. 38 - Changing Orifices

Final Gas Piping Check

⚠ WARNING

FIRE OR EXPLOSION HAZARD

Failure to follow this warning could result in personal injury, death, and/or property damage.

Never test for gas leaks with an open flame. Use a commercially available soap solution made specifically for the detection of leaks to check all connections. A fire or explosion could result causing property damage, personal injury and/or loss of life.

1. The furnace and the equipment shut off valve must be disconnected from the gas supply piping system during any pressure testing of that system at test pressures in excess of 1/2″ PSIG. Close the manual shut-off valve before testing at such pressures.
2. When installation is complete, test all pipe connections for leaks with the gas pressure less than 1/2″ PSIG to the gas valve.
3. The furnace must be isolated from the gas supply system by closing the equipment shut off valve during any pressure testing of the gas supply system at test pressure equal to or less than 1/2″ PSI (3.5 kPa).
4. Apply a commercial soap solution to all joints to test for leaks. Correct any leaks indicated by bubbles.
5. Correct even the smallest leak at once.
6. Check for leaks at gas valve and orifice connections to the burner manifold while the furnace is operating.

ELECTRICAL WIRING

Power Supply Wiring

The furnace **MUST** be electrically wired and grounded in accordance with local codes, or in the absence of local codes with the latest edition of The National Electric Code, ANSI NFPA 70 and/or The Canadian Electric Code CSA C22.1.

The power supply to the furnace connections must be between 104 VAC and 127 VAC during furnace operation for acceptable performance.

Field wiring connections must be made inside the furnace connection box. A suitable strain relief should be used at the point the wires exit the furnace casing.

Copper conductors shall be used. Line voltage wires should conform to temperature limitation of 63° F (35° C) rise and be sized for the unit maximum amps stated on the rating plate. Add the full load amps for potential field-installed accessories such as electronic air cleaners and humidifiers that would receive power from the furnace control. The furnace control is rated for a maximum of 1.0 amp combined for EAC and HUM. Consult NEC or local codes for proper wire and circuit sizing.

NOTE: Furnace will not have normal operation if line polarity is reversed. Check ALL field and control connections prior to operation.

Junction Box (J-Box) Relocation

The J-box is installed on left side of casing. An alternate j-box location on right side can be used.

1. Remove bag containing two hole plugs and two self tapping screws from loose parts bag in blower compartment.
2. Remove two screws holding J-Box to casing.
3. Move large hole plug from right to left J-Box location.
4. Clip wire tie holding J-Box wires.

5. Move J-Box to alternate location and attach using two self tapping screws from bag.
6. Apply two hole plugs from bag at left J-Box location.

Thermostat

Thermostat location has an important effect on the operation of the unit. Follow instructions included with thermostat for correct mounting and wiring.

Low voltage connections to furnace must be made on terminal board of furnace control.

Heat anticipator setting will need to be measured if 24VAC humidifier is installed. Measure current in series from R to W at the thermostat. Be sure 24VAC humidifier is wired up to control. Allow furnace to operate for 2 minutes before recording the AC amperage reading. Set anticipator on thermostat to recorded value.

PG9YAB

Optional Equipment

All wiring from furnace to optional equipment **MUST** conform to local codes or, in the absence of local codes with the latest edition of The National Electric Code, ANSI NFPA 70 and/or The Canadian Electric Code CSA C22.1. Install wiring in accordance with manufacturer's instructions. The wiring **MUST** have a minimum temperature rating of 105° C.

Humidifier/Electronic Air Cleaner

The furnace is wired for humidifier and/or electronic air cleaner connection.

⚠ CAUTION

REDUCED FURNACE LIFE HAZARD

Failure to follow this caution may result in reduced furnace life.

Do NOT exceed 115V/1.0 amp. maximum current load for both the EAC terminal and the HUM terminal combined.

HUMIDIFIER - The 24V HUM is energized when the pressure switch closes on a call for heat. The 115V HUM (called HUM on Control) is energized when the inducer is energized.

ELECTRONIC AIR CLEANER - EAC is energized when there is a blower speed call, except is NOT energized when blower operates in the hard-wired continuous fan mode.

Furnace Control

The furnace control is preset at the factory with a fixed blower **ON** delay of 30 seconds in the heating mode. The blower **OFF** timing is preset at 140 seconds. If desired, the fan **OFF** delay can be reset to obtain the longest delay times while still maintaining comfort levels. See "Furnace Wiring Diagram" .

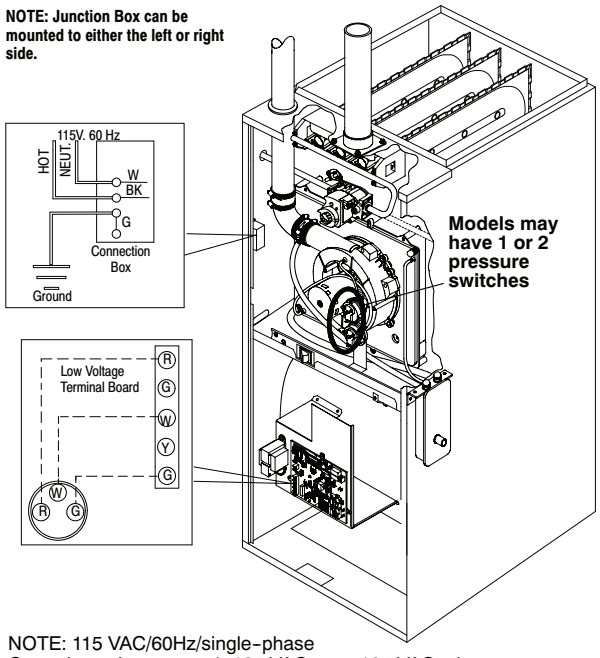

NOTE: 115 VAC/60Hz/single-phase
Operating voltage range*: 127 VAC max, 104 VAC min.

* Permissible limits of voltage at which unit will operate satisfactorily

Representative drawing only, some models may vary in appearance.

A07726

Fig. 39 - Electrical Connections

Furnace Control Fuse

The 24V circuit contains a 5-amp, automotive-type fuse located on furnace control. (See Fig. 40.) Any electrical shorts of 24V wiring during installation, service, or maintenance may cause fuse to blow. If fuse replacement is required, use only a fuse of identical size (5 amp.)

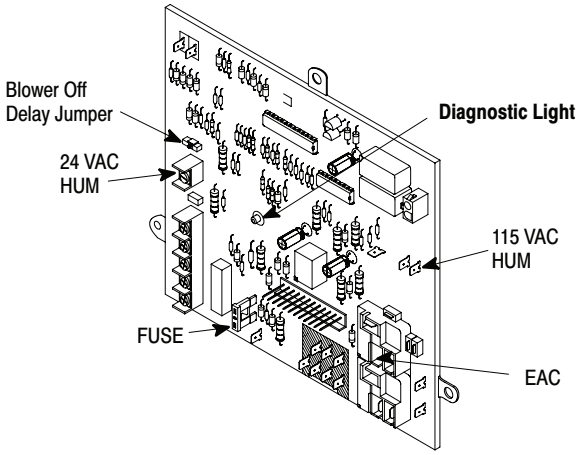

A07727

Fig. 40 - Control Board

DUCTWORK AND FILTER

⚠ WARNING

CARBON MONOXIDE POISONING HAZARD

Failure to follow this warning could result in personal injury or death.

Do NOT draw return air from inside a closet or utility room where furnace is located. Return air duct MUST be sealed to furnace casing.

Installation

NOTE: Design and install the air distribution system to comply with Air Conditioning Contractors of America manuals and/or NFPA pamphlets 90A and 90B or other approved methods that conform to local codes and good trade practices.

1. When furnace supply ducts carry air outside furnace area, seal return air duct to furnace casing and terminate duct outside furnace space.
2. Install air conditioning cooling coil (evaporator) on outlet side of furnace.
3. For furnaces installed without a cooling coil it is recommended that the outlet duct be provided with a removable access panel. This panel should be accessible when the furnace is installed so the exterior of the heat exchanger can be viewed for inspections. The access panel **MUST** be sealed to prevent leaks.
4. If separate evaporator and blower units are used, install good sealing dampers for air flow control. Chilled air going through the furnace could cause condensation and shorten the furnace life.

NOTE: Dampers (field supplied) can be either automatic or manual. Manually operated dampers **MUST** be equipped with a means to prevent furnace or air conditioning operation unless damper is in the full heat or cool position.

⚠ WARNING

CARBON MONOXIDE POISONING HAZARD

Failure to follow this warning could result in personal injury or death.

Cool air passing over heat exchanger can cause condensate to form resulting in heat exchanger failure.

Connections

NOTE: On upflow installations, return air can enter through either side, both sides, or the bottom. On horizontal installations the return air must enter through the knockout opening in the lower panel of the furnace. Return air **can not** enter through rear of the furnace. When the furnace is located in an area near or adjacent to the living area, the system should be carefully designed with returns to minimize noise transmission through the return grille. Any blower moving a high volume of air will produce audible noise which could be objectionable to when the unit is located very close to living areas. It is advisable to route the return air ducts under the floor or through the attic.

1. For side connections using a 16″ x 25″ (406 x 635 mm) filter, cut out the embossed area shown in Fig. 41. This will provide a $14^1/_2$″ x $22^1/_2$″ (368 x 572 mm) approximate opening.

NOTE: **Furnaces with 5 ton cooling rating may require both (left and right) side return or one side and bottom return. Side return air duct(s) is not permitted with horizontal furnace installation.**

A = 14 $/_2$″ (368.3mm) Height of Cutout for 16″ x 25″ (406.4 x 635mm) Filter
B = $22^1/_2$″ (571.5mm) Width of Cutout for 16″ x 25″ (406.4 x 635mm) Filter

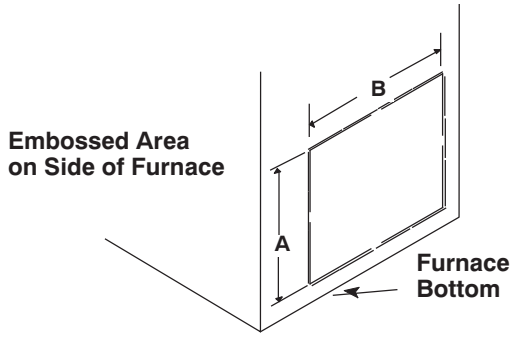

A07728

Fig. 41 - Side Return Air Cutout

2. Bottom returns can be made by removing the knockout panel in the furnace base. Do **NOT** remove knock-out except for a bottom return.
3. Installation of locking-type dampers are recommended in all branches, or in individual ducts to balance system's air flow.
4. Non-combustible, flexible duct connectors are recommended for return and supply connections to furnace.
5. If air return grille is located close to the fan inlet, install at least one, 90° air turn between fan and inlet grille to reduce noise.

NOTE: To further reduce noise, install acoustical air turning vanes and/or line the inside of duct with acoustical material.

Sizing

Existing or new ductwork **MUST** be sized to handle the correct amount of airflow for either heating only or heating and air conditioning.

Insulation

1. Insulate ductwork installed in attics or other areas exposed to outside temperatures with a minimum of 2″ (51 mm) insulation and vapor barrier.
2. Insulate ductwork in indoor unconditioned areas with a minimum of 1″ (25 mm) insulation with indoor type vapor barrier.

Filters

A Filter **must** be used:

Filters are not supplied with these furnaces, but can be purchased from the distributor.

Use either filter type:

- Washable, high velocity filters are based on a maximum air flow rating of 600 FPM.
- Disposable, low velocity filters are based on a maximum air flow of 300 FPM when used with filter grille.
- See *Circulating Air Blower Data* for additional data.

NOTE: Disposable, low velocity filters may be replaced with washable, high velocity filter providing they meet the minimum size areas. Washable, high velocity filters can be replaced **ONLY** with same type and size.

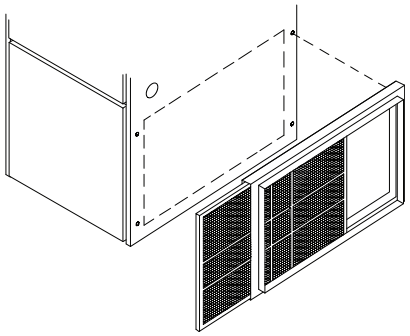

A07729

Fig. 42 - Side Mounted Filter Rack

Filter Installation using Optional Filter Rack

When installing or removing a bottom mounted filter, slide the two side filter clips to the back of the furnace **BEFORE** installing or removing. This will allow the filter to clear the front raised edge of the furnace. Insert filter into side clips first and push filter back until it is fully engaged into back clip. When filter is in place, slide clips back into place midway on filter as shown in Fig. 43 and Fig. 44**.**

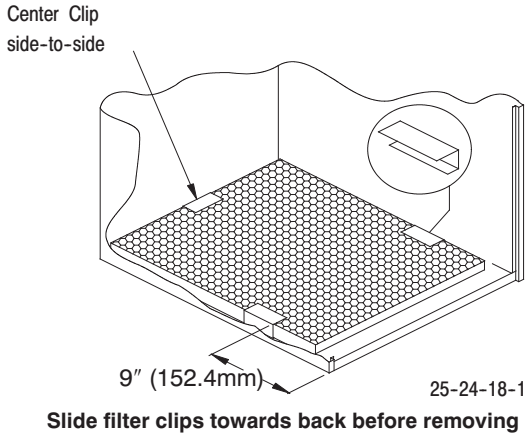

A07691

Fig. 43 - Bottom Mounted Filter Rack

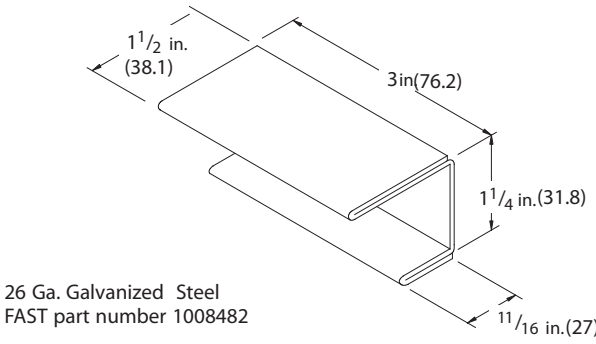

A07730

Fig. 44 - Filter Clip Construction

Refer to Fig. 45 and for guidelines to install filters. Furnaces which require larger filter media and have limited clearances on one side of furnace, require a standoff filter rack, see Fig. 45, available from your distributor.

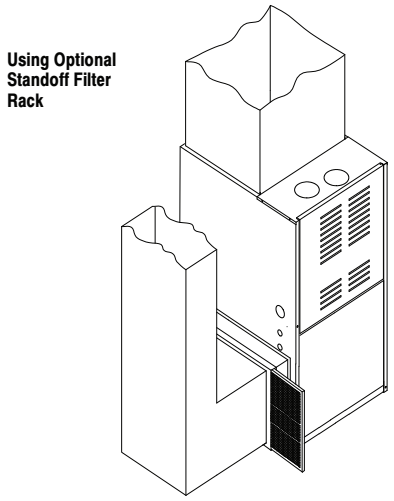

A07731

Fig. 45 - Standoff Filter Rack

Addition Of Air Conditioning

When a refrigeration coil is used in conjunction with this unit, it must be installed parallel with or on the discharge side of the unit to avoid condensation on the heat exchanger. All furnaces are designed with a break-away duct flange on the supply air side of the furnace. This allows for installation in the horizontal right or downflow applications. The coil installation instructions must be consulted for proper coil location and installation procedures. With a parallel flow arrangement, dampers must be installed to prevent chilled air from entering the furnace. If manually operated dampers are used, they must be equipped with a means to prevent operation of either unit unless the damper is in full heat or full cool position.

A 3″ (76 mm) clearance is required on the right side of the furnace in order to run the condensate drain line. Copper or plastic tubing may be used for the condensate drain line.

CHECKS AND ADJUSTMENTS

NOTE: Verify the input rate of the furnace.

⚠ WARNING

FIRE OR EXPLOSION HAZARD

Failure to follow this warning could result in personal injury, death and /or property damage.

Turn OFF gas at shut off before connecting manometer.

Start-up

NOTE: Refer to the start-up procedures in the "*User's Information Manual*" or to the "*Operating Instructions Label*" on the furnace.

⚠ WARNING

ELECTRICAL OPERATION HAZARD

Failure to follow this warning could result in personal injury, death, and/or property damage.

If any sparks, odors or unusual noises occur, immediately shut OFF power to the furnace. Check for wiring errors or obstruction to blower.

Gas Supply Pressure

Gas supply pressure should be within minimum and maximum values listed on rating plate (minimum and maximum pressures, refer to Table 5). Pressures are usually set by gas suppliers.

Manifold Gas Pressure Adjustment

NOTE: Make adjustment to manifold pressure with burners operating.

1. Remove the burner compartment door.
2. Remove the blower compartment door. Place a jumper across furnace controls **R** to **W**. Replace blower compartment door.
3. With gas **OFF**, connect manometer to tapped opening on gas valve. Use manometer with a 0 to 15 inches of water column range.
4. Turn gas **ON** and remove adjustment screw cover on gas valve. Turn adjusting screw counterclockwise to decrease manifold pressure and clockwise to increase pressure.

NOTE: Adjustment screw cover **MUST** be replaced on gas control valve before reading manifold pressure and operating furnace.

5. Set manifold pressure to value as shown in Table 6 or 7 under **GAS SUPPLY AND PIPING** section in this manual.
6. When the manifold pressure is properly set, replace the adjustment screw cover on the gas control valve.

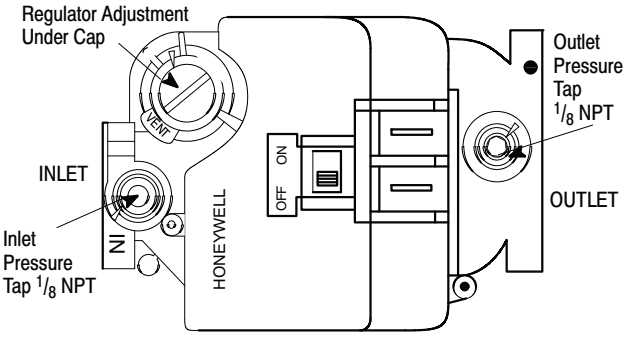

A07732

Fig. 46 - Typical Gas Valve

7. Remove blower compartment door. Remove jumper wire from thermostat connection on furnace control board. Remove manometer connection from manifold pressure tap, and replace plug in manifold.
8. Check for leaks at plug.
9. Replace the burner and blower compartment doors.

Natural Gas Input Rating Check

NOTE: The gas meter can be used to measure input to furnace. Rating is based on a natural gas BTU content of 1,000 BTU's per cubic meter. Check with gas supplier for actual BTU content.

1. Turn **OFF** gas supply to all appliances and start furnace. Use jumper wire on **R** to **W** for Heat.
2. Time how many seconds it takes the smallest dial on the gas meter to make one complete revolution. Refer to **Example**.

NOTE: If meter uses a 2 cubic foot dial, divide results (seconds) by two.

Example			
Natural Gas BTU Content	**No. of Seconds Per Hour**	**Time Per Cubic Foot in Seconds**	**BTU Per Hour**
1,000	3,600	48	75,000
1,000 x 3,600 ÷ 48 = 75,000 BTUH			

3. Remove jumper wire from **R** to **W**.
4. Relight all appliances and ensure all pilots are operating.

Main Burner Flame Check

Allow the furnace to run approximately 10 minutes then inspect the main burner. See Fig. 47.

Check for the following (Fig. 47):

- Stable and blue flames. Dust may cause orange tips or wisps of yellow, but flames **MUST NOT** have solid, yellow tips.
- Flames extending directly from burner into heat exchanger.
- Flames do **NOT** touch sides of heat exchanger.

If any problems with main burner flames are noted, it may be necessary to adjust gas pressures, or check for drafts.

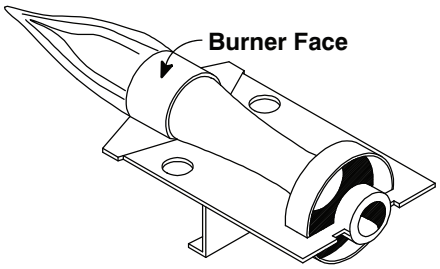

A07734

Fig. 47 - Main Burner

NOTE: For igniter location see Fig. 48.

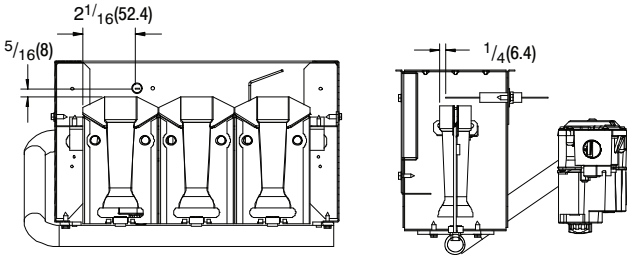

NOTE: Flame sensor has a different orientation in all 050 models.

A07735

Fig. 48 - Igniter Location

Temperature Rise Check

The blower speed **MUST** be set to give the correct air temperature rise through the furnace as marked on the rating plate. Temperature rise is the difference between supply and return air temperatures.

To check temperature rise,use the following procedure:

1.Place thermometers in supply and return air registers as close to furnace as possible, avoiding direct radiant heat from heat exchangers.

2.Operate furnace continuously for 15 minutes with all registers and duct dampers open.

3.Take reading and compare with range specified on rating plate.

4.If the correct amount of temperature rise is **NOT** obtained, it may be necessary to change blower speed. A higher blower speed

will lower the temperature rise. A lower blower speed will increase the temperature rise.

Changing Blower Speed

⚠ WARNING

ELECTRICAL SHOCK HAZARD

Failure to follow this warning could result in personal injury or death.

Turn OFF power to furnace before changing speed taps.

NOTE: The speed taps that the manufacturer sets from the factory for this product are based on a nominal 400 CFM per ton cooling and the basic mid range on the temperature rise for heating.

Since the manufacturer cannot establish the static pressure that will be applied to the unit, it is the responsibility of the installer dealer/contractor to select the proper speed taps for the application when the unit is installed.

If it is necessary to change speeds, refer to steps below.

⚠ CAUTION

REDUCED FURNACE LIFE HAZARD

Failure to follow this caution may result in reduced furnace life.

Use ONLY the blower motor speed taps insert indicated in the Circulation Air Blower Data for setting air temperature rise.

Table 8 – Blower Speed Chart

Wire Color	Motor Speed
Black	High
Orange*	Med–High
Blue	Medium
Red	Low
* Med–High speed may not be provided on all models.	

1. Refer to *Furnace Wiring Diagram* for location of the heating and cooling speed taps located on the furnace control as well as location of unused blower motor speed leads. Use the chart (Table 8) to determine the blower motor speed settings.
2. Change the heat or cool blower motor speed by removing the motor lead from the "**Heat**" or "**Cool**" terminal and replace it with the desired motor speed lead from the **"Unused Motor Lead**" location. Connect the wire previously removed from the "**Heat**" or "**Cool**" terminal to the vacated **"Unused Motor Lead**" terminal.
3. If the same speed must be used for both heating and cooling, remove the undesired motor speed lead from the **"Heat**" or **"Cool**" terminal and connect that lead to the open terminal at **"Unused Motor Lead**" location. Attach a jumper between the "**Heat**" and "**Cool**" terminals and the remaining motor speed lead.

NOTE: For motors with (4) speed leads, it will be necessary to tape off the terminal of the motor speed lead removed from the "**Heat**" or "**Cool**" terminal with electrical tape since an open terminal will not be available at the **"Unused Motor Lead**" location.

Continuous- Fan Operation using "G"

Energizing the "G" terminal on the furnace control provides continuous fan operation. This is done by connecting the G terminal of the thermostat to the G terminal on the furnace control. When the FAN switch is turned from auto to ON the fan will operate continuously at "HEAT" speed. EAC will be energized in this mode.

NOTE: In heating, the fan will turn off during furnace ignition and warm up then restart at heating speed.

Hard Wired Continuous Fan Operation

A terminal is provided on the furnace control board located in the circulating blower compartment for operation of the continuous fan option. This connection is intended for the low speed motor tap, and has a lower contact rating (8 amps) than the heat and cool taps. When the low speed blower lead is connected to this terminal, this will provide low speed blower operation whenever the other two speeds (**Heat** or **Cool**) are not energized.

Thoroughly check the system after modification to ensure the proper operation of the circulating air blower in all modes of operation.

Separate Speed Selections for Heat, Cool, and Continuous Fan

Connect low speed lead from circulating motor to the "**Cont.**" terminal at the furnace control. The appropriate motor leads should already be connected to the "**Heat**" and "**Cool**" terminals.

Heating and Continuous Blower Speed the Same

If it is necessary to operate the heating speed and continuous blower speed using the same blower speed, connect a jumper between the "**Heat**" and "**Cont.**" terminals on the furnace control.

NOTE: There should be only **ONE** motor lead going to the "**Heat**" and "**Cont.**" terminals.

FURNACE MAINTENANCE

⚠ WARNING

FIRE, EXPLOSION, OR CARBON MONOXIDE HAZARDS

Failure to follow this warning could result in personal injury, death and/or property damage.

It is recommended that the furnace be inspected and serviced on an annual basis (before the heating season) by a qualified service technician.

⚠ WARNING

ELECTRICAL SHOCK, FIRE OR EXPLOSION HAZARD

Failure to follow this warning could result in personal injury, death, and/or property damage.

Before servicing, disconnect all electrical power to furnace. Lockout and tag with appropriate label.

When servicing controls, label all wires prior to disconnecting. Reconnect wires correctly.

Verify proper operation after servicing.

See *"User's Information Manual" and the "Service Manual".*

SEQUENCE OF OPERATION & DIAGNOSTICS

Following is the normal operating sequence:

Cooling (Y) Request:

24VAC signals applied to Y & G terminals of FCB (furnace control board)

- Cool motor speed is energized after 5 second Cool Fan On Delay time.

Y & G signals removed from FCB

- Cool motor speed is de-energized after 90 second Cool Fan Off Delay time.

Continuous Circulating Fan (G) Request:

- 24 VAC signal is applied to G terminal of the FCB.
- Heat motor speed is energized without delay.
- G signal removed from FCB.
- Heat motor speed is de-energized after 5 second delay.

NOTE:

(1.) Furnace de-energizes the fan during the heat exchanger warm-up period on a call for Heating that occurs during a G request unless a blower motor lead is connected to the Cont terminal on the FCB, in which case see NOTE 2).

(2.) Heating or Cooling requests received during a Fan request cause the fan speed to change to the appropriate heat or cool speed after the Fan on Delay time expires. The fan returns to continuous circulating speed after the selected Fan Off Delay time expires following loss of the Heating or Cooling request.

Continuous Circulating Fan Hard-Wired (Cont) Request

Field selected low speed motor tap installed on "CONT" terminal.

- Low speed is energized when power applied to furnace. Operates at this speed continuously while there are no other blower demands from furnace control. Fan demands from furnace control for heat, cool or "G" will override hard-wired speed tap.

NOTE: EAC is NOT active for hard-wired mode but IS active for fan demands from furnace control for heat, cool and "G".

Heating (W) Request:

Heating (W) Request:

- 24 VAC signal applied to W terminal of FCB.
- Inducer motor turns on and the pressure switch(es) close(s)
- Following a 15 second prepurge delay, after the pressure switches closes, the igniter begins a 17 second warm-up.
- The gas valve is energized, the main burners light and flame is sensed.
- The igniter is de-energized after the main burners ignite.
- FCB will delay blower operation for the 30 seconds timed from the opening of the gas valve.
- W signal removed from FCB.
- The gas valve de-energizes and the main burners go out.
- The inducer runs for a 15 second postpurge period.
- The fan stays at Heat speed.
- The fan de-energizes after the selected Heat Fan Off Delay time expires, timed from the gas valve de-energizing.

HUMIDIFIER - The 24V HUM is energized when the pressure switch closes on a call for heat. The 115V HUM (called HUM on Control) is energized when the inducer is energized.

ELECTRONIC AIR CLEANER - EAC is energized when there is a blower speed call. It is NOT energized when blower operates in the hard-wired continuous fan mode.

NOTE: If a new Heating request arrives while the control is waiting in the Heat Fan Off Delay time, the FCB will wait for the selected Heat Fan Off Delay then start a new heating cycle as long as the heat call remains.

Heating Request with Gas Shut Off:

24 VAC signal applied to W terminal of FCB.
The FCB will attempt 4 cycles for ignition then go to soft lockout for 3 hours then try for ignition again as long as the heat call remains. Power reset will clear lockout.

- Inducer motor turns on
- Following a 15 second prepurge delay, the igniter begins warm up.
- The igniter glows red-hot for 22 seconds, then turns off. The FCB flashes error code 6.
- The igniter stays off for 17 seconds, then begins to warm up again.
- The igniter glows red hot for 22 seconds then turns off. The FCB continues flashing error code 6.
- The igniter stays off for 17 seconds, then begins to warm up again.
- The igniter glows red hot for 22 seconds then turns off. The FCB continues flashing error code 6.
- The igniter stays off for 17 seconds, then begins to warm up again.
- The igniter glows red hot for 22 seconds then turns off. The FCB proceeds to soft lockout and stops flashing error code 6 and begins flashing error code 6 + 1.
- The inducer motor de-energizes after a 15 second post purge.

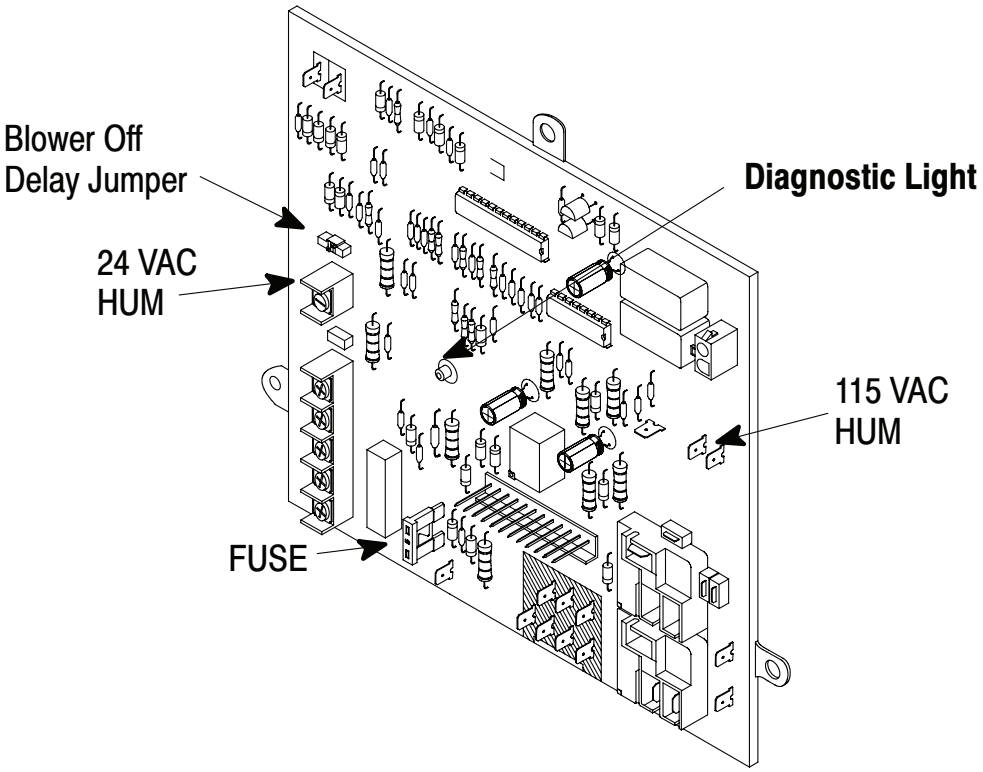

A07733

Fig. 49 - Control Board

Control Board Diagnostic Codes

OFF	= 24VAC or 115VAC is off, fuse is open
Heartbeat	= Normal operation or no previous Diagnostic Code
ON SOLID	= Soft Lockout – Furnace Control Error (1 hr. delay) If code repeats immediately following power reset then replace control
1 Flash	= Not used
2 Flashes	= Pressure switch(es) closed when should be open
3 Flashes	= Pressure switch open when should be closed
4 Flashes	= Limit or roll–out switch open (less than 2 minutes)
5 Flashes	= Flame sensed out of sequence
6 Flashes	= Failure to ignite or flame sense lost while running
6 + 1 Flashes	= Soft Lockout – Max trials for ignition reached (3 hr delay)
7 Flashes	= Soft Lockout – Limit or roll–out switch open longer than two minutes (1 hr delay) (roll–out switch requires manual reset)
8 Flashes	= Permanent Lockout – Gas valve relay contact stuck closed or miswired gas valve (power reset only)
10 Flashes	= Line voltage (115VAC) polarity reversed. If twinned, refer to twinning kit instructions

* If status code recall is needed, briefly (2–3 seconds) remove then reconnect one limit switch wire (main or rollout) to display last stored status code. Do not remove power or blower door before initiating status code recall or code will be lost. Code is automatically cleared after 72 hours or upon power reset.

* Proper flame sense microamps: 0.7 microamps D.C. minimum, 2.0 – 4.0 microamps nominal

©2010 Payne Heating & Cooling Systems ● 7310 W. Morris St. ● Indianapolis, IN 46231 Printed in U.S.A. Edition Date: 12/10 **Catalog No. IM–PG9YAB–03**

Manufacturer reserves the right to discontinue, or change at any time, specifications or designs without notice and without incurring obligations. Replaces: IM–PG9YAB–02