TOSHIBA

Installation Manual

Central Control Device

For commercial use

BN interface

Model name:

BMS-IFBN1281U-E
BMS-IFBN1281U-TR

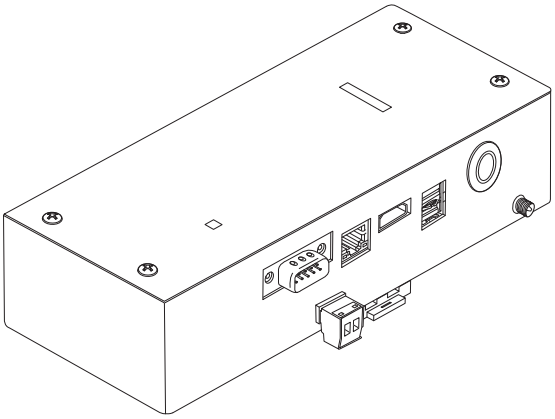

Multilingual installation manual, license agreement and license information

[български] Изтегляне на Ръководство за монтаж, Лицензионно споразумение и Лицензна информация / [Česky] Stažení Montážní příručky, Licenční smlouvy a Licenčních informací / [Dansk] Download installationsvejledning, licensaftale og licensinformation / [Deutsch] Installationshandbuch, Lizenzvereinbarung und Lizenzinformation herunterladen / [Ελληνικά] Λήψη εγγράφων «Εγχειρίδιο εγκατάστασης», «Άδεια χρήσης» και «Πληροφορίες για την άδεια» / [English] Installation Manual, License Agreement and License Information Download / [Español] Descarga del Manual de instalación, del Contrato de licencia y de la Información de licencia / [Eesti] Paigaldusjuhendi, litsentsi kokkuleppe ja litsentsiteabe allalaadimine / [Suomi] Asennusohjeiden, lisenssisopimuksen ja lisenssitietojen lataaminen / [Français] Téléchargement du manuel d'installation, du contrat de licence et des informations sur la licence / [Hrvatski] Preuzimanje Priručnika za instalaciju, Ugovora o licenci i Informacija o licenci / [Magyar] Telepítési kézikönyv, Licencszerződés és Licencinformáció letöltése / [Italiano] Download del Manuale di installazione, del Contratto di licenza e delle Informazioni sulla licenza / [Latviešu] Uzstādīšanas rokasgrāmatas, licences līguma un licences informācijas lejupielāde / [Norsk] Nedlasting av installasjonsveiledning, lisensavtale og lisensinformasjon / [Nederlands] Installatiehandleiding, Licentieovereenkomst en Licentie-informatie downloaden / [Polski] Pobieranie Instrukcji instalacyjnej, Umowy licencyjnej i Informacji o licencji / [Português] Download do Manual de instalação, Contrato de Licença e das Informações sobre a licença / [Română] Descărcarea Manual de instalare, Contract de licență și Informații de licență / [Русский] Скачать Руководство по установке, Лицензионное соглашение и Информацию о лицензии / [Slovensky] Stiahnutie Montážnej príručky, Licenčnej zmluvy a Informácií o licencii / [Slovenščina] Prenos navodil za montažo, licenčne pogodbe in licenčnih informacij / [Svenska] Nedladdning av Installationshandbok, Licensavtal och Licensinformation / [Türkçe] Kurulum kılavuzu, Lisans Sözleşmesi ve Lisans Bilgileri İndirme / [中文] 安装手册，许可证协议和许可证信息下载

https://www.toshiba-carrier.co.jp/global/manual/bms-ifbn1281u.htm

“AEEE Yönetmeligine Uygundur.”

Contents

Precautions for safety 2
Introduction 3
1 Installation 5
2 Power and signal line connections 7
3 Settings 14
3-1. Switch setting 14
3-2. LED 15
4 Factory default settings 15
5 Test run 16
5-1. BACnet communication settings 16
5-2. Setting up equipment data in the indoor unit 17
5-3. Cause of problem occurring during setup 18
6 Turning off the BN interface 18

Precautions for safety

The following instructions must be observed.

- Carefully read these "Precautions for Safety" before installation, and perform installation work safely.
- These precautions contain important information regarding safety.
- After installation work, carry out an operation trial to confirm that there are no problems, and explain to the customer how to operate and maintain the system. Ask the customer to keep this Installation Manual.

Expressions

⚠ Warning	Text set off in this manner indicates that failure to adhere to the directions in the warning could result in serious bodily harm (*1) or loss of life if the product is handled improperly.
⚠ Caution	Text set off in this manner indicates that failure to adhere to the directions in the caution could result in serious bodily injury (*2) or damage (*3) to property if the product is handled improperly.

*1: Serious bodily harm indicates loss of eyesight, injury, burns, electric shock, bone fracture, poisoning, and other injuries which leave aftereffect and require hospitalization or long-term treatment as an outpatient.
*2: Bodily injury indicates injury, burns, electric shock, and other injuries which do not require hospitalization or long-term treatment as an outpatient.
*3: Damage to property indicates damage extending to buildings, household effects, domestic livestock, and pets.

Graphic symbols

⃠ Prohibited	"⃠" indicates prohibited items. The actual contents of the prohibition are indicated by a picture or text placed inside or next to the graphic symbol.
❗ Compulsory	"❗" indicates compulsory (mandatory) items. The actual contents of the obligation are indicated by a picture or text placed inside or next to the graphic symbol.

⚠ Warning

❗

- **Installation and reinstallation should be performed by your dealer or a qualified electrician**
  Attempting to carry out installation work on your own, and doing so incorrectly, may result in electric shock or fire.
- **Electrical work must be performed by a qualified electrician in accordance with this Installation Manual. The work must satisfy all local, national and international regulations**
  Inappropriate work may result in electric shock or fire.
- **Be sure to turn off the power before starting work**
  Failure to do so may result in electric shock.
- **Use only the power adapter supplied with this unit**
  A power adapter other than that supplied with this unit may provide a different voltage and have different polarity (+) (−), which could lead to fire, explosion or generation of heat.

⃠

- **Do not modify the unit**
  Doing so may result in excessive heat or fire.

Warning
This is a class A product. In a domestic environment this product may cause radio interference in which case the user may be required to take adequate measures.

Introduction

■ Overview

The BN interface refers to equipment used for controlling Building Management Systems (Procured locally) and air conditioners “TU2C-LINK Uh Line (hereinafter, referred to as Uh Line) compatible models” through communications via a network to enable central control.

■ Included Items

Component	Q'ty	Remarks
BN interface equipment	1	
Power adapter	1	BN interface power supply (not include Power Cable)
Pin terminal	2	Uh Line caulked connectors
Mounting bracket (DIN rail)	1	Use screws to secure the unit in locations without DIN rails (walls, etc.)
Screws (M4 x 12)	2	For securing the DIN rails
Installation Manual	1	This manual
License Agreement	1	
License Information	1	

■ Specifications

Power supply	Rated voltage	220-240 V AC 50/60 Hz
	Power consumption	10 W
Operating temperature range		0°C to 40°C, 10% to 80% RH (no condensation)
Storage temperature range		−10°C to +60°C, 10% to 90% RH (no condensation)
Dimensions		Width 200 mm x Height 100 mm x Depth 59 mm
Mass		BN interface 765 g Power adapter 450 g
Number of connected units	Indoor unit	Up to 128 units (TU2C-LINK) Up to 64 units (TCC-LINK)

■ External View (BN interface equipment)

(Unit: mm)

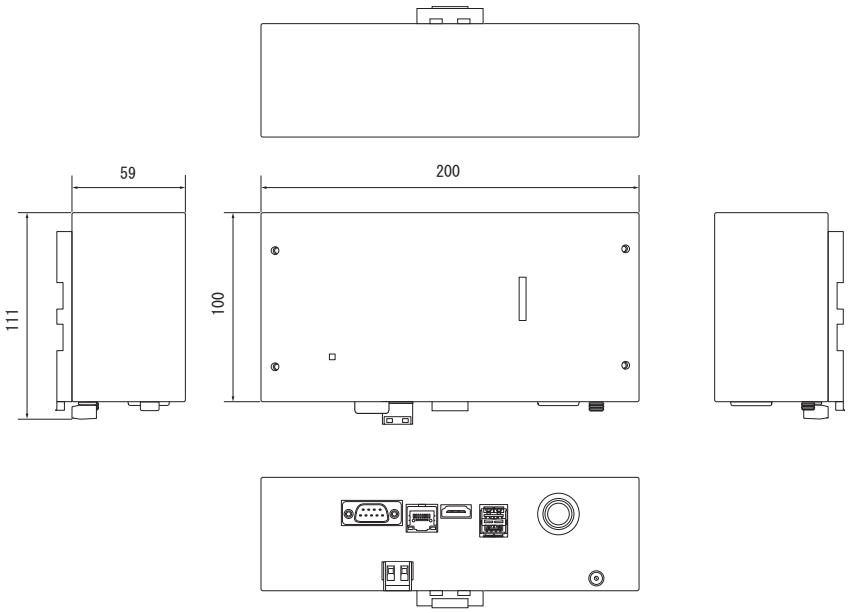

(Power adapter)

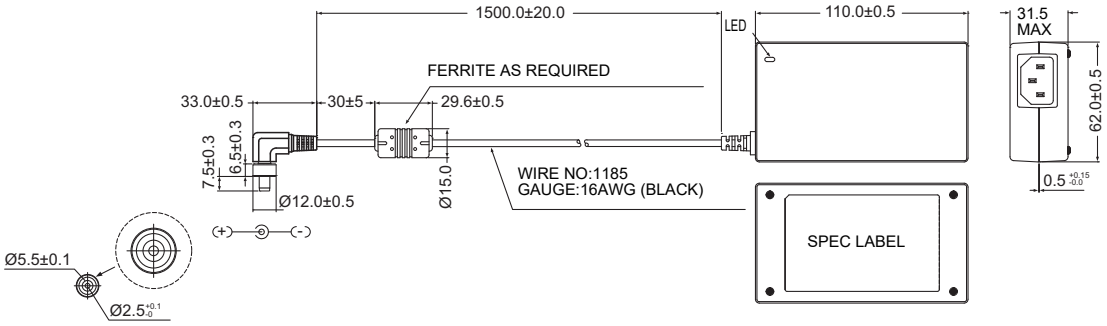

REQUIREMENT

Power cable is not supplied for the BN Interface. Insert a two core power cord applicable to the standard of the country you use.

■ Component Names

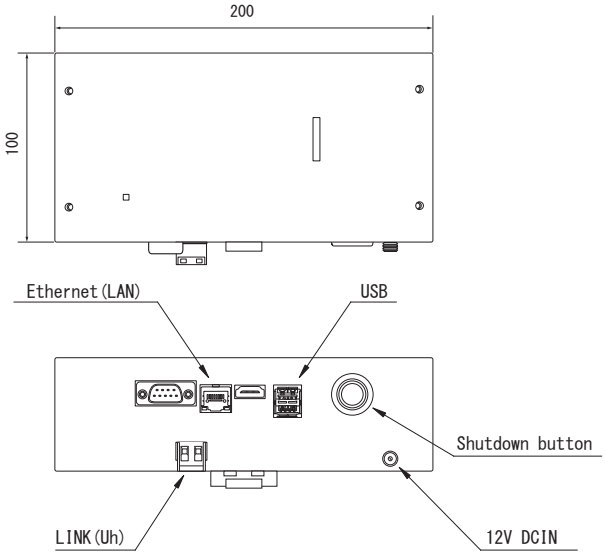

Name	Function
12V DCIN	Connect the power adapter
USB	(For service)
Ethernet (LAN)	Connect to the Building Management System
Shutdown button	Shutdown or switch to air conditioner search mode
LINK (Uh)	Connect the central control wiring

1 Installation

REQUIREMENT

Do not install the unit in any of the following places.
- Humid or wet place
- Dusty place
- Place exposed to direct sunlight
- Place where there is a TV set or radio within one meter
- Place exposed to rain (outdoors, under eaves, etc.)

■ BN Interface Installation and Orientation

Install and orient the interface using the DIN rail to mount the unit or wall mount or surface mount it as shown below.
Use the supplied mounting bracket to wall mount or surface mount the interface.

(1) DIN rail mount
Install the interface on DIN rails mounted on a switchboard or elsewhere.

Front view

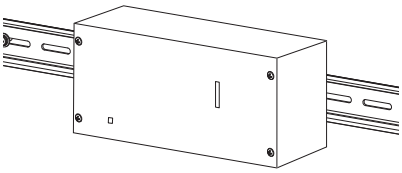

Back view

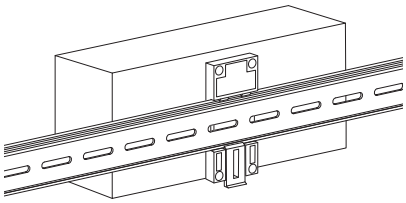

(2) Wall mount
Use screws to attach the supplied DIN rails to a wall and install the interface on the DIN rail.

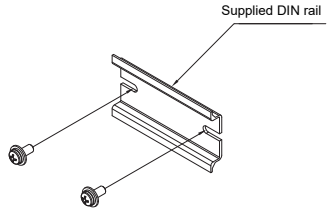

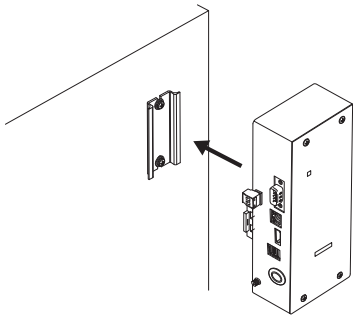

Wall mount A

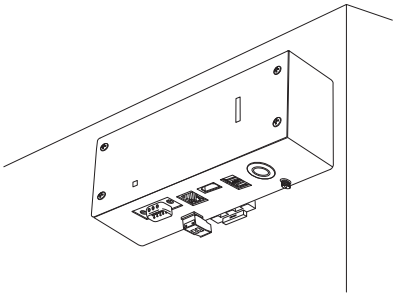

Wall mount B

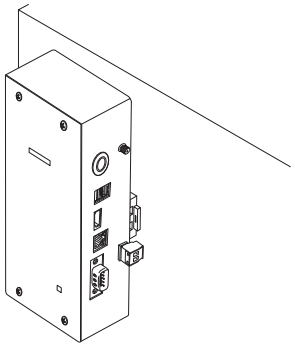

Wall mount C

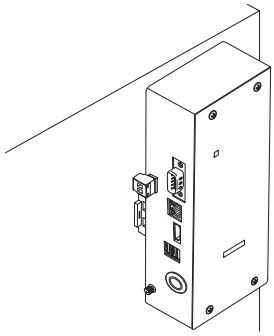

■ Installation Space and Maintenance Space

A side space for connecting through cable inlets and an upper space for maintenance must be reserved before installation.
The other sides can be adjacent to surrounding objects.

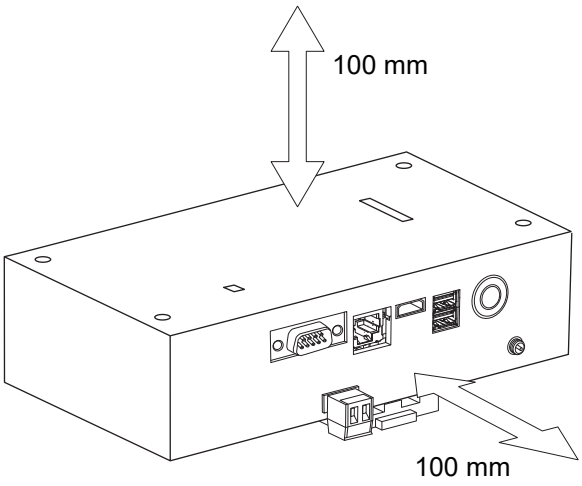

2 Power and signal line connections

■ Cables

Use the following cable for signal line connections. (Procured locally)

No.	Line	Description	
1	For Uh Line	Type	2-core shielded wires
		Wire size	Refer to "Design of Control Wiring" (P.10 to P.13)
		Length	
2	For Ethernet®	Type	LAN cable (higher than Category 5, UTP)
			The appropriate use of straight cable/cross cable should be done depending on your system used
		Length	100 m max.

Ethernet® is a registered trademark of Xerox Co., Ltd.

■ Cable Connections

Connect the cables to the specified connectors.

Length of stripped Uh Line communication cable

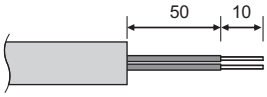

Connect the supplied pin terminal to the Uh Line communication cable as necessary.

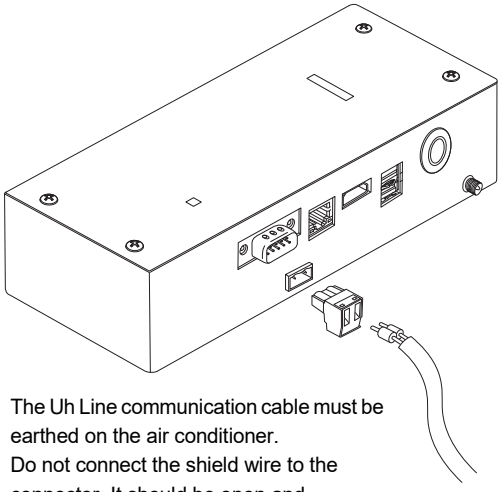

The Uh Line communication cable must be earthed on the air conditioner.
Do not connect the shield wire to the connector. It should be open and insulated.

Air conditioner

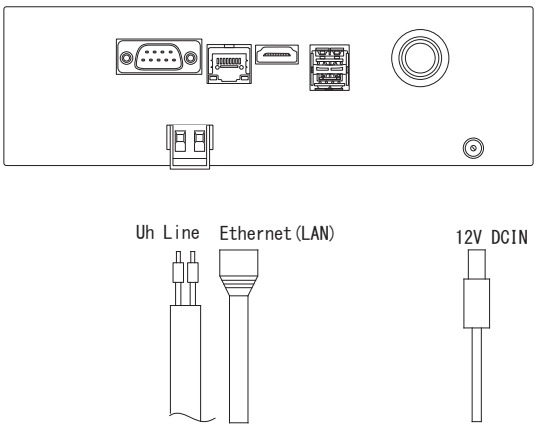

Connection of Uh Line communication cables	Connect the LAN cable	Connect the supplied power adapter

CAUTION

The Uh Line communication cable have no polarity.

* Secure the Uh Line communication cable and power cable to the switchboard etc. using the supplied cable tie to ensure that no excess load is placed on the power cable connection and Uh Line communication cable connection.

■ Example of System Wiring Connections

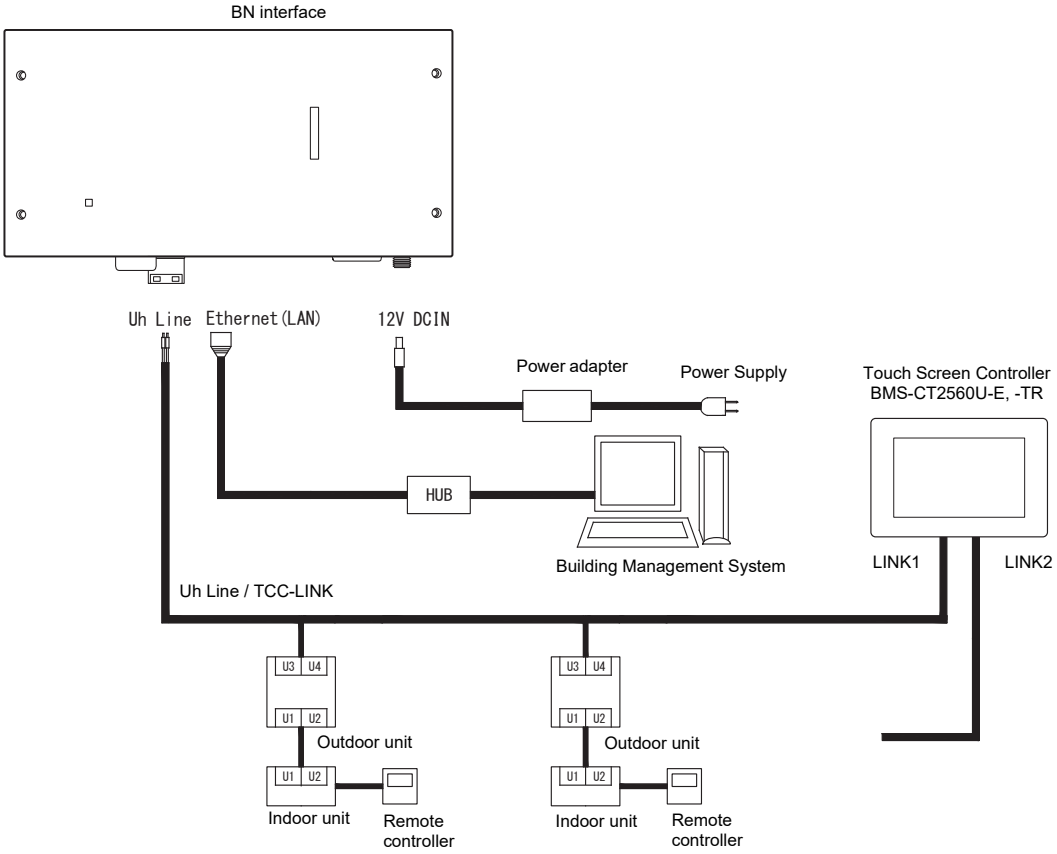

Termination resistance setting

- TU2C-LINK / TCC-LINK termination resistance setting .....<For TCC-LINK>
  Leave just 1 line of the termination resistance in the interface board of the outdoor unit (centre unit) ON, and turn all the others OFF. (Refer to the wiring diagram attached to the outdoor unit for the position of SW.)
  <For TU2C-LINK>
  For the central control wiring (Uh line), set the termination resistance that is farthest away on the wiring between this central controller and the other unit (VRF, light commercial, air to air heat exchanger, general purpose control interface, air to water heat pump) to ON.

Refer to the manual of each model for the termination resistance setting method.

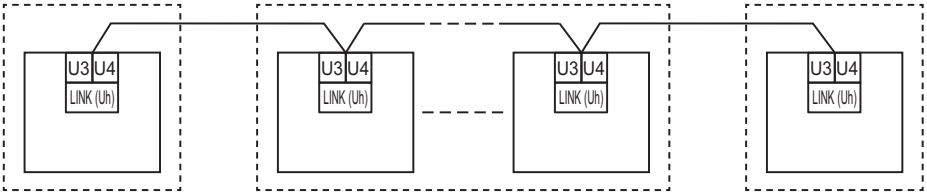

Termination resistance ON **Termination resistance OFF** **Termination resistance ON**

Shield grounding process

- Central control wiring shielded wire .....When using the central remote controller with one unit, open the shielded wire of the central control wiring and perform insulation processing.
  When using the central remote controller with multiple units, connect the shield of the central control wiring to the closed end and open the shield at the final end of the central remote controller to perform insulation processing.
  Perform the central control wiring shield grounding on the air conditioner side.

REQUIREMENT

- Be sure to install a circuit breaker or all-pole isolating switch (with a contact breaking distance of at least 3 mm) on the primary side of the power supply.
- Fasten the screws to the terminal block with torque of 0.5 N•m.

■ Design of Control Wiring

Communication method and model name

The TU2C-LINK model (U series) can be used together with previous models (other than U series).
For details of the model and communication method, see the following table.

Communication method	TU2C-LINK (U series)	TCC-LINK (other than U series)
Outdoor unit	MMY-M**U**P*** U series model	Other than on the left (MMY-MAP***, MCY-MAP***, etc.)
Indoor unit	MM*-**U**P*** U series model	Other than on the left (MM*-AP***, etc.)
Wired remote controller	RBC-AMS**U**** U series model	Other than on the left
Wireless remote controller receiver	RBC-AXR**U**** U series model TCB-AXR**U**** U series model	Other than on the left
Central control device	***-***U** U series model	Other than on the left

NOTE

The equipment that can be displayed may vary depending on the country or region.
For details contact our sales personnel.

When the connected outdoor unit is Super Multi u series (U series)

Follow the wiring specifications in the table below even when there is a mix of U series and non-U series in the connected indoor units or remote controllers.

Wiring specifications

Item	Communication line
	Central control wiring (Uh line)
Wire diameter	1.0 to 1.5 mm² (up to 1000 m)
	2.0 mm² (up to 2000 m)
Wire type	2-core, non-polar
Wire types that can be used	Shielded wire

REQUIREMENT

When wiring the control wiring between indoor and outdoor units (Uv line)/control wiring between outdoor units (Uc line) and the central control wiring (Uh line), use the same wire type and diameter for each line.
Using a mixture of different wire types and diameters may cause a communication error.

System diagram

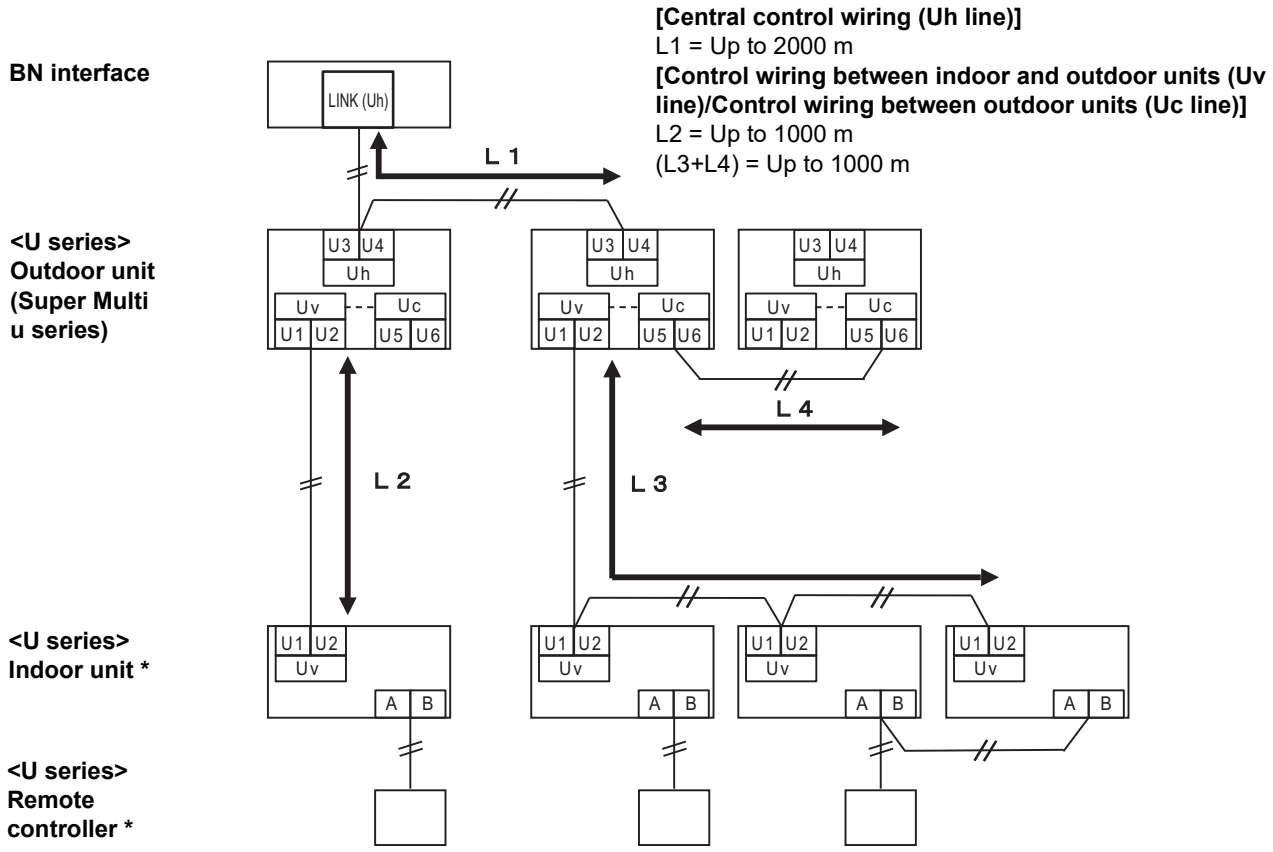

* The wiring specifications in the system diagram above are the same even when the indoor unit or remote controller are other than the U series.

When the connected outdoor units are other than Super Multi u series (U series)

Wiring specifications

Item	Communication line
	Control wiring between indoor and outdoor units and central control wiring
Wire diameter	1.25 mm² (up to 1000 m)
	2.0 mm² (up to 2000 m)
Wire type	2-core, non-polar
Wire types that can be used	Shielded wire

REQUIREMENT

When wiring the control wiring between indoor and outdoor units/central control wiring and the control wiring between outdoor units, use the same wire type and diameter for each line.
Using a mixture of different wire types and diameters may cause a communication error.

System diagram

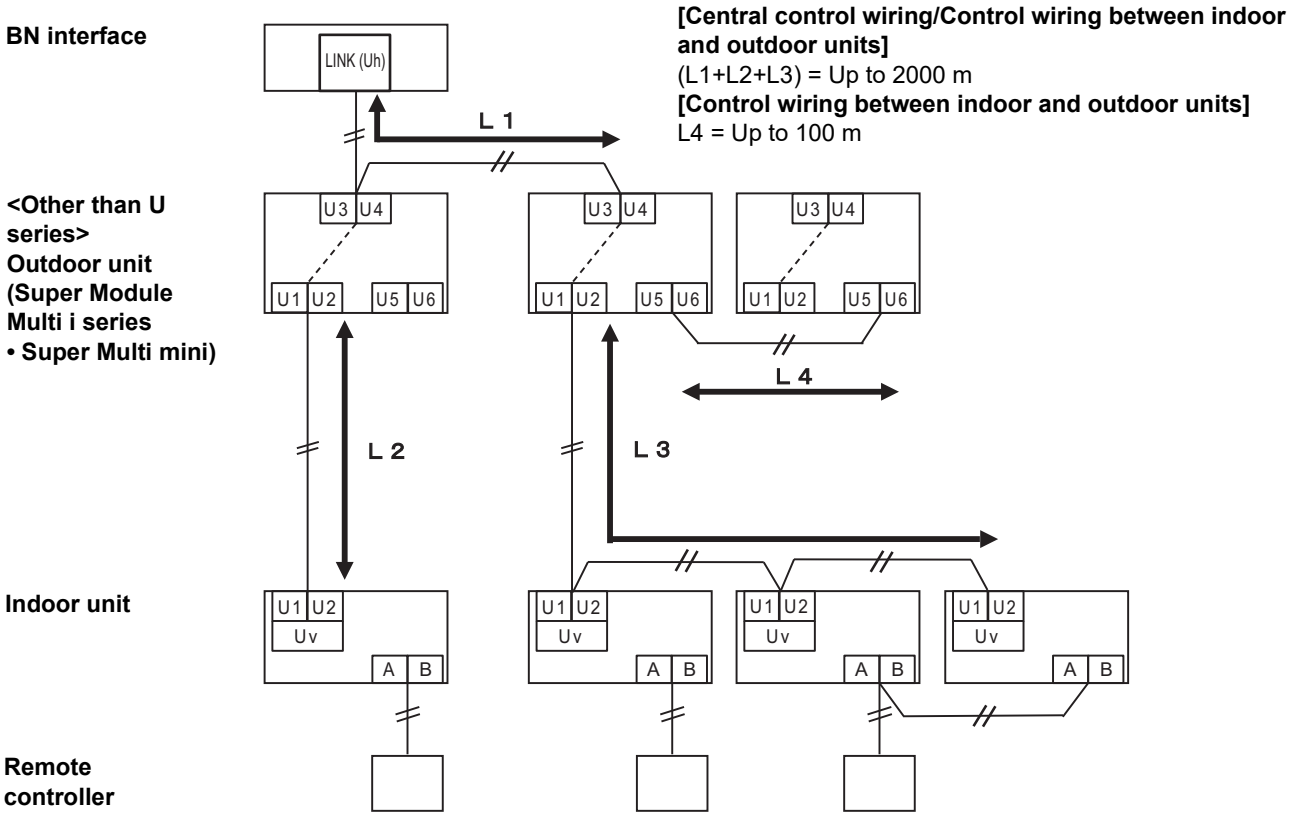

When connecting to a previous model light commercial, air to air heat exchanger, air to water heat pump, or general purpose equipment control interface

Follow the wiring specifications in the table below even when there is a mix of U series and non-U series in the connected indoor units or remote controllers.

Wiring specifications

Item	Communication line
	Central control wiring (Uh line)
Wire diameter	1.25 mm² (up to 1000 m)
	2.0 mm² (up to 2000 m)
Wire type	2-core, non-polar
Wire types that can be used	Shielded wire

REQUIREMENT

When wiring the control wiring between indoor and outdoor units (Uv line)/control wiring between outdoor units (Uc line) and the central control wiring (Uh line), use the same wire type and diameter for each line.
Using a mixture of different wire types and diameters may cause a communication error.

System diagram

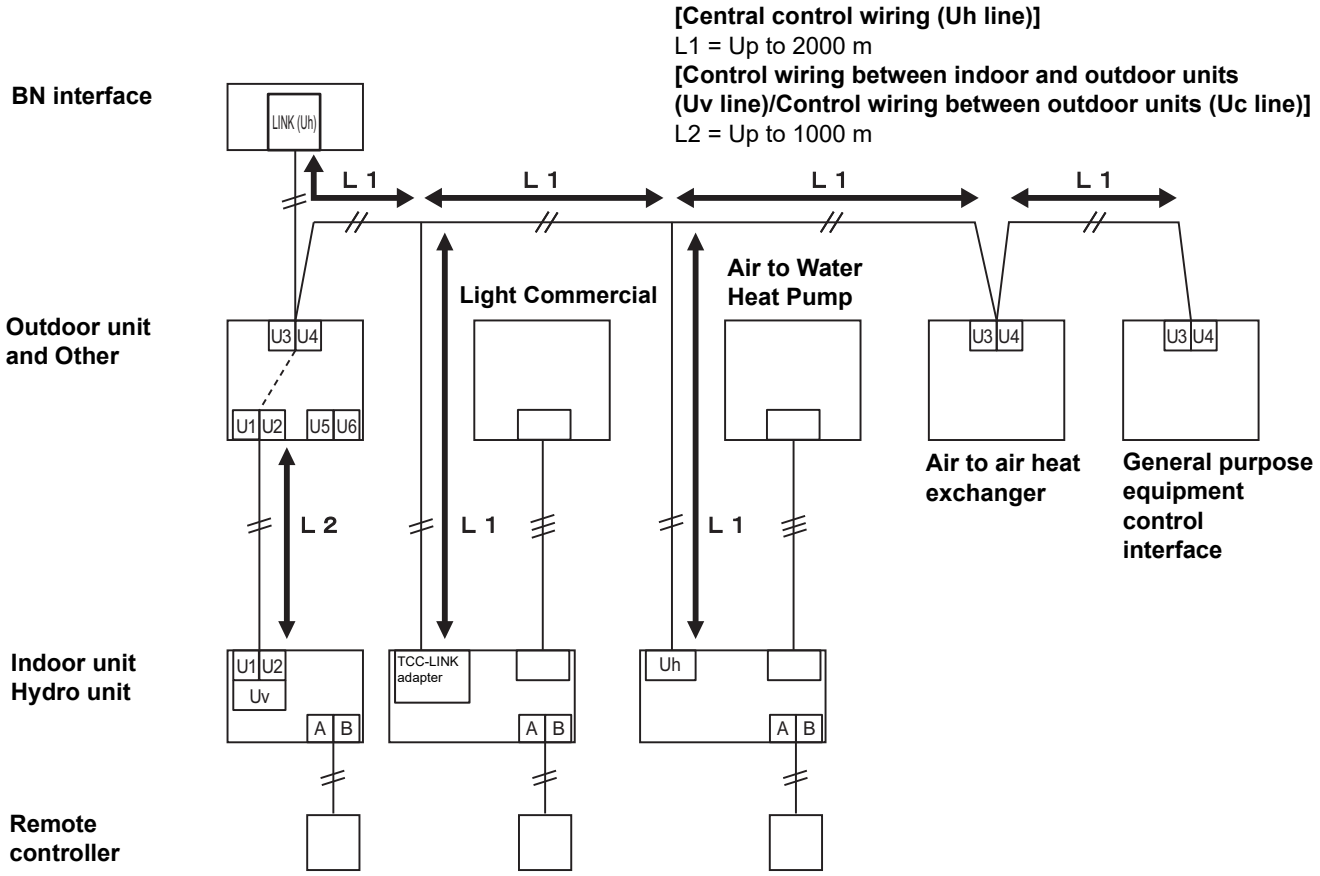

3 Settings

3-1. Switch setting

SW100 Uh Line termination resistance setting switch
bit1:use, bit2:not use
Refer to "Termination resistance setting" (P.9)

Shutdown button Shutdown function / air conditioner search mode function button
Use this button to stop BACnet process and network process of the BN interface or to start up in the air conditioner search mode. Note that button operation changes depending on how long it is depressed.

Time duration button is depressed	Operation
The Shutdown button 2 times	Stop BACnet process and network process of the BN interface.
4 seconds or more	Start up in the air conditioner search mode. Use the air conditioner search mode to set up equipment data in the indoor unit.

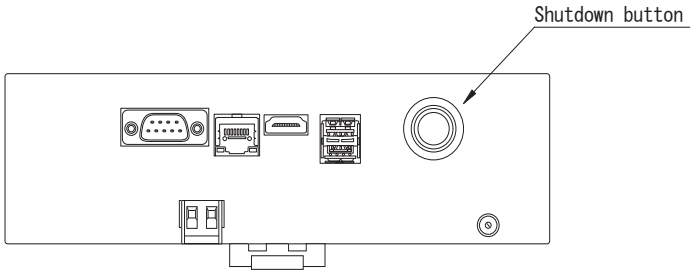

Unscrew and open the product

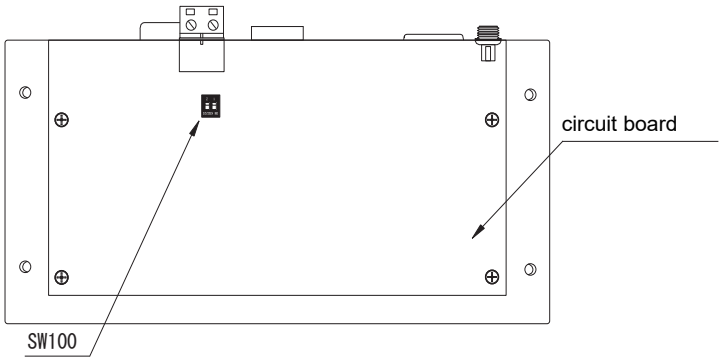

3-2. LED

LED	LED color	Use
POWER	Red	Power indicator
RS485	Green	Not use
LINK1(Uh)	Orange	Uh Line communication status indicator
LINK2(Uh)	Orange	Not use
ERROR	Red	Uh Line communication error indicator
L1	Green	BACnet communication status indicator, setting error indicator

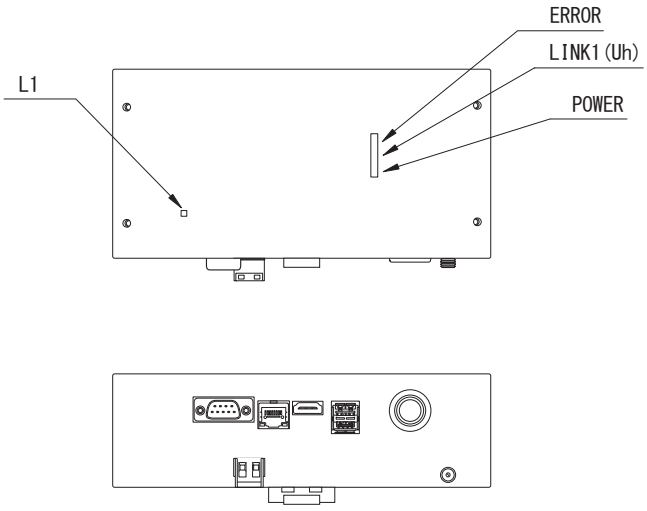

4 Factory default settings

No.	Item	Factory default setting
1	IP address of BN interface	IP address 192.168.1.100 Subnet mask 255.255.255.0
2	UDP port	47808 (0xBAC0)
3	Device object instance number	100
4	Uh Line termination resistance select switch	OFF

5 Test run

To perform test run of the BN interface, BACnet communication settings and the equipment data of the connected indoor units are required.

Items to be set during trial run

Equipment	Item		Setting method
Outdoor unit	Uh Line address	Line address	Use the DIP switch on the outdoor unit circuit board.
Indoor unit	Uh Line address	Line address	Use the address setting function of wired remote controller. (Except for simple wired remote controller)
		Unit address	
		Central control address	
		Group address	
BN interface	IP address	IP address	Use Setting File Creation Software 2. (See Section 5-1.)
		Network mask	
	BACnet communication device identification number	BACnet device object instance number	
	When using together with a central control device not compatible with Uh Line	Setting of old BN interface	
		Setting for combined use with old controller	
	When using together with a central device compatible with Uh Line	Change the "Central Controller ID" from ID1 to ID20	
	When replacing with a BN interface that does not support Uh Line	Setting of old BN interface	
	Indoor unit information (DN code setting values)	Line address	When setup work (see Section 5-2) is performed, the BN interface reads out the set values from the indoor unit and records them on the SD card of the BN interface. Perform setup work after changing the device information of the indoor unit.
		Unit address	
		Central control address	
		Group address	
		Operation mode setting range	
		Temperature setting range	
		Fan speed setting range	
		Flap type	
		Ventilation amount setting range	
		Ventilation mode setting range	
		Availability of ventilation operation	
		Availability of save function	

5-1. BACnet communication settings

Set the IP address of the BN interface and the device object instance number of the BACnet communications. These setting can set from Setting File Creation Software 2. For details, contact your dealer.

5-2. Setting up equipment data in the indoor unit

Obtain the equipment data of the indoor unit that is controlled by the BN interface from the indoor unit via the Uh Line communication cable.

Preparing to set up equipment data in the indoor unit

- Central Control address must be set in the indoor unit you want to control.
  For information on how to set the address, refer to the installation manual of each indoor unit.
- Turn on all indoor and outdoor units. Set up as follows, waiting 10 minutes after turning on all the units.

Setup work

Step 1. Start the BN interface.

- Turn on the BN interface.
- The status of the LED L1 changes to LEDstatus-1, LEDstatus-2, and then to LEDstatus-4. It takes about 10 minutes for the LED L1 status to change to LEDstatus-4.

Step 2. Start up in the air conditioner search mode.

- Hold down the Shutdown button for 4 seconds or more.
- The status of the LED L1 changes to LEDstatus-7 and then to LEDstatus-8.
- When reading equipment information from the indoor units is successfully completed, the BN interface automatically prepares for BACnet communication.
- The status of the LED L1 changes to LEDstatus-1, LEDstatus-2, and then to LEDstatus-4. It takes about 10 minutes for the LED L1 status to change to LEDstatus-4.
- If an error occurs, then the status of the LED L1 will be LEDstatus-3.
  Refer to Section 5-3 to check for the cause of error generation.

When the BN interface is operating normally

- The status of the LED L1 is LEDstatus-4.

LED L1 blinking

Operation	LED status	Situation/processing	LED blinking pattern
Starting up	LEDstatus-1	During initialization	
	LEDstatus-2	During BACnet connecting operation	
	LEDstatus-3	File error during startup Other error during startup	
While in operation	LEDstatus-4	During BACnet communication	
Pressing the Shutdown button	LEDstatus-5	During processing for BACnet software shutdown	
	LEDstatus-6	Shut down	
Start up in the air conditioner search mode	LEDstatus-7	During preparation for air conditioner search mode	
	LEDstatus-8	During air conditioner search	

ON
OFF
* Control interval (time length of 1 cell): 200 ms

5-3. Cause of problem occurring during setup

Cause of problem	Cause	Action
The indoor unit cannot be found.	The indoor and outdoor units have not been turned on.	Make sure that indoor and outdoor units are turned on.
	The indoor and outdoor units are being initialized and it is not possible to communicate with them. LINK1(Uh) does not blink at all	Make sure that indoor and outdoor units are turned on. Make sure they have been on for at least 10 minutes.
	The Uh Line cables have been incorrectly connected.	Connect the cables correctly.
	The central control address has not been set in the indoor units.	Make sure that the central control address has been set in the indoor units.
The central control address set in the indoor units are not unique.	The same central control address has been set in a number of indoor units.	Make sure that the central control address has been correctly set in the indoor units.

6 Turning off the BN interface

Press the shutdown button, then wait 5 minutes before turning it off.
When turning off the BN interface

- Press the Shutdown button 2 times.
- The status of the LED L1 changes to LEDstatus-5 and then to LEDstatus-6.
- Disconnect the power adapter from the BN interface.

CAUTION

As the air conditioner search mode will be engaged if the shutdown button is pressed for 4 seconds or longer, do not hold down the button.

Manufacturer / Importer

Name of manufacturer (制造商)

Toshiba Carrier Corporation

东芝开利株式会社

Address, city, country (住址)

72-34 Horikawa-cho, Saiwai-ku, Kawasaki-shi, Kanagawa-ken

212-0013, JAPAN

神奈川県川崎市幸区堀川町 72 番地 34

Name of the Importer/Distributor in EU

Toshiba Carrier EUROPE S.A.S

Address, city, country

Route de Thil 01120 Montluel FRANCE

Name of the Importer/Distributor in UK

Toshiba Carrier UK Ltd

Address, city, country

Porsham Close, Belliver Industrial Estate,

PLYMOUTH, Devon, PL6 7DB. United Kingdom

在中国的进口商 / 分销商名称

东芝开利空调销售 (上海) 有限公司

地址，城市，国家

上海市西藏中路 268 号来福士广场办公楼 501 室

Klimanıza ilişkin daha ayrıntılı bilgiler için ürün tanıtım broşürlerine,
gerektiğinde Alarko Carrier Yetkili Satıcı ve Servislerine ulaşabilmek için 444 0 128 numaralı
Müşteri Danışma Hattımıza başvurabilirsiniz.

Toshiba Carrier Corporation

336 TADEHARA, FUJI-SHI, SHIZUOKA-KEN 416-8521 JAPAN

DEC3009101-1