619R*F
Floor Console Ductless System
Sizes 09 to 12

bryant®

Owner's Manual

TABLE OF CONTENTS

PAGE

A NOTE ABOUT SAFETY 2
GENERAL 2
PART NAMES 3
FUNCTION BUTTONS 4
INDOOR UNIT DISPLAY PANELS 5
REMOTE CONTROL 7
REMOTE CONTROL FUNCTIONS 8
CLEANING, MAINTENANCE AND TROUBLESHOOTING . . . . . 11 – 12

NOTE TO EQUIPMENT OWNER:

Please read this Owner's Information Manual carefully before installing and using this appliance and keep this manual for future reference.

For your convenience, please record the model and serial numbers of your new equipment in the spaces provided. This information, along with the installation data and dealer contact information, will be helpful should your system require maintenance or service.

UNIT INFORMATION

Model # _____

Serial # _____

INSTALLATION INFORMATION

Date Installed _____

DEALERSHIP CONTACT INFORMATION

Company Name: _____

Address: _____

_____

Phone Number: _____

Technician Name: _____

_____

A NOTE ABOUT SAFETY

Any time you see this symbol ⚠ in manuals, instructions and on the unit, be aware of the potential for personal injury. There are three levels of precaution:

DANGER identifies the most serious hazards which will result in severe personal injury or death.

WARNING signifies hazards that could result in personal injury or death.

CAUTION is used to identify unsafe practices which could result in minor personal injury or product and property damage.

NOTE is used to highlight suggestions which will result in enhanced installation, reliability, or operation.

▲ WARNING

PERSONAL INJURY, DEATH AND / OR PROPERTY DAMAGE HAZARD

Failure to follow this warning could result in personal injury, death or property damage.

Improper installation, adjustment, alteration, service, maintenance, or use can cause explosion, fire, electrical shock, or other conditions which may cause personal injury or property damage. Consult a qualified installer, service agency, or your distributor or branch for information or assistance. The qualified installer or service agency must use factory−authorized kits or accessories when modifying this product.

Read and follow all instructions and warnings, including labels shipped with or attached to unit before operating your new air conditioner.

GENERAL

The floor console fan coil unit provides quiet, maximum comfort. In addition to cooling and/or heating, the floor console fan coil unit matched with an outdoor condensing unit filters and dehumidifies the air in the room to provide maximum comfort.

IMPORTANT: The floor console fan coil unit should be installed by authorized personnel only; using approved tubing and accessories. If technical assistance, service or repair is needed, contact the installer.

The floor console fan coil unit can be set up and operated from the remote control (provided). **If the remote is misplaced, the system can be operated from the "Auto" setting on the unit.**

Operating Modes:

The floor console fan coil unit has five operating modes:

- Fan only
- Auto
- Heating (heat pump models only)
- Cooling
- Dehumidification (DRY)

Fan Only

In Fan Only mode, the system filters and circulates the room air without changing room air temperature.

Auto

In Auto mode, the system automatically cools or heats the room according to the user−selected set point.

Heating

In Heating mode, the system heats and filters the room air.

Cooling

In Cooling mode, the system cools, dries and filters the room air.

Dehumidification (DRY)

In Dehumidification mode, the system dries, filters and slightly cools the room air temperature. This mode prioritizes air dehumidification but it ***does not*** take the place of a dehumidifier.

Wireless Remote Control

The remote control transmits commands to set up and operate the system. The control has a window display panel that displays the current system status. The control can be secured to a surface when used with the mounting bracket provided.

Wired Remote Control (Optional)

PART NAMES

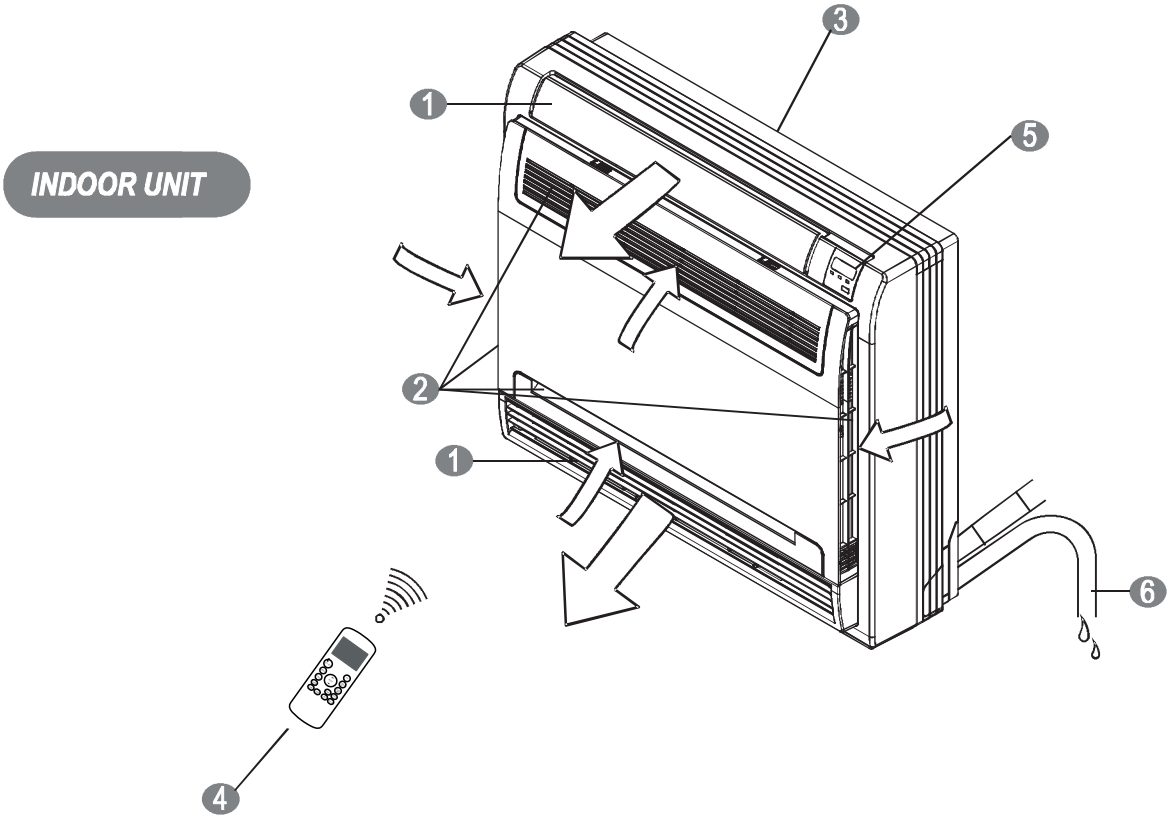

INDOOR UNIT

1. Air flow louver (at air outlet)
2. Air inlet (with air filter inside)
3. Installation section
4. Remote controller
5. Display panel
6. Drain pipe

Fig. 1 – Indoor Unit

FUNCTION BUTTONS

Before you begin using your new air conditioner, make sure to familiarize yourself with the remote control. The following is a brief introduction to the remote control.

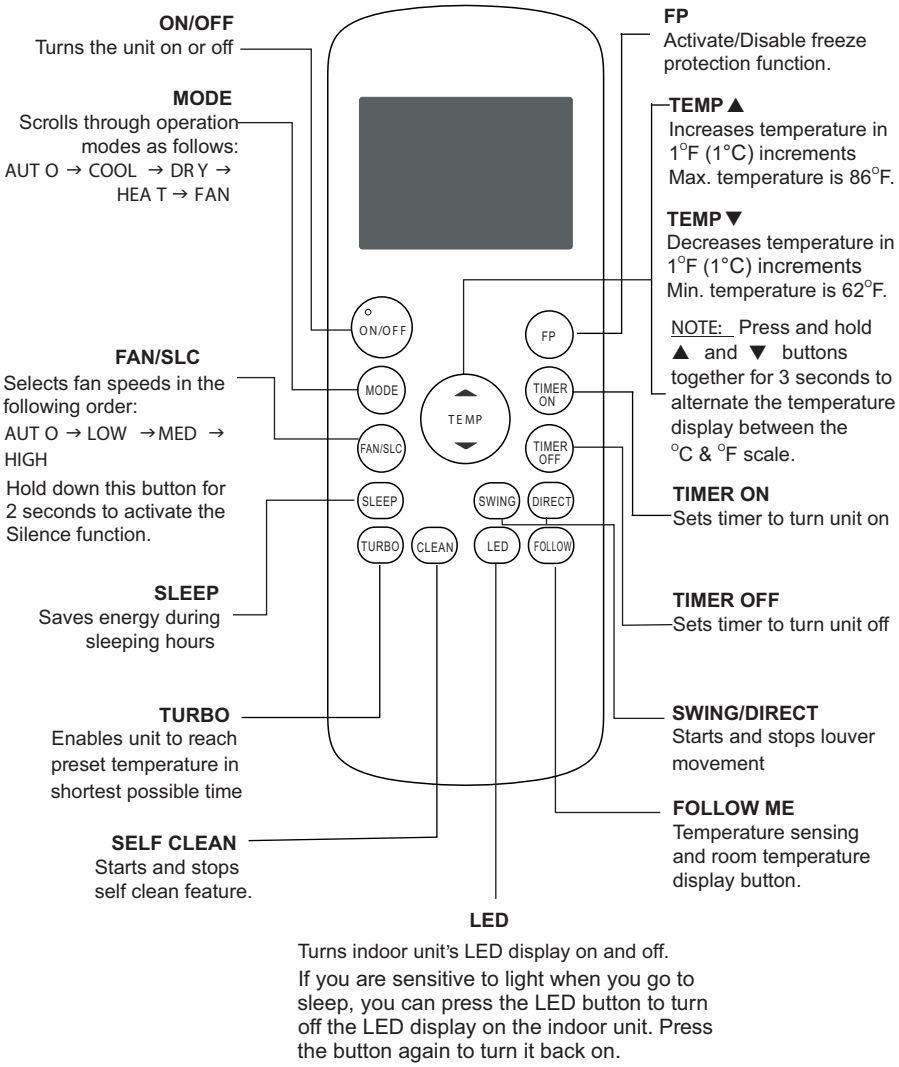

Fig. 2 Remote Controller

NOTE: New Remote Controller Starting on production of week 41 year 2016 (serial number 4116V10001). For advanced functions refer to the Service Manual of the indoor unit.

INDOOR UNIT DISPLAY PANELS

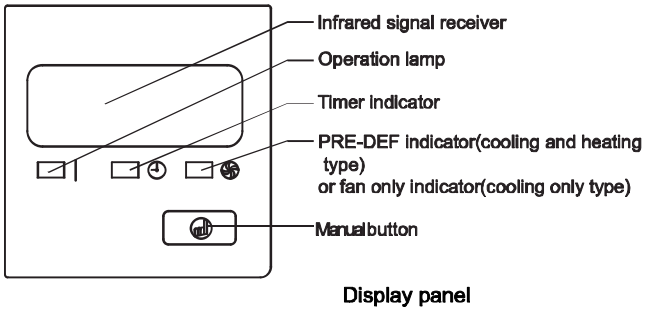

A150655

Fig. 3 Display Panel

Fig. 4 − Remote Controller

Wireless Remote Display

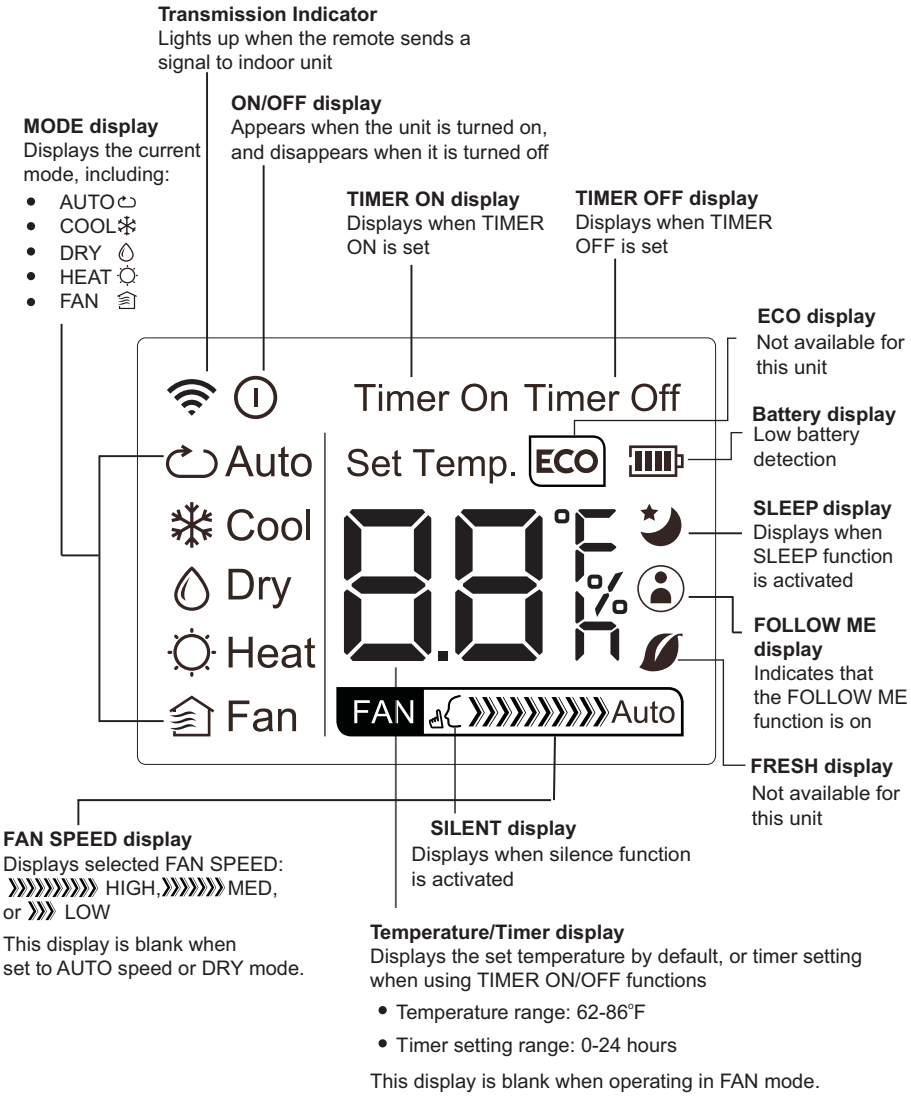

Fig. 5 − Wireless Remote Display

REMOTE CONTROL

▲ CAUTION

EQUIPMENT DAMAGE HAZARD

Failure to follow this caution may result in equipment damage.
Handle the control with care and avoid getting the control wet.

IMPORTANT: The remote control can operate the unit from a distance of up to 26 ft. (8 m) as long as there are no obstructions.

When the timer function is used, the remote control should be kept in the vicinity of the fan coil (within 26 ft. / 8 m).

The remote control can perform the following basic functions:

- Turn the system ON and OFF
- Select operating mode
- Adjust room air temperature set point and fan speed
- Adjust airflow direction

Refer to the *Remote Control Function* section for a detailed description of all the capabilities of the remote control.

Battery Installation

Two AAA 1.5v alkaline batteries (included) are required for operation of the remote control.

To install or replace batteries:

1. Slide the back cover off the control to open the battery compartment.
2. Insert batteries. Follow the polarity markings inside the battery compartment.
3. Replace the battery compartment cover.

NOTE:

1. When replacing batteries, do not use old batteries or a different type battery. This may cause the remote control to malfunction.
2. If the remote is not going to be used for several weeks, remove the batteries. Otherwise battery leakage may damage the remote control.
3. The average battery life under normal use is about 6 months.
4. Replace the batteries when there is no audible beep from the indoor unit or if the Transmission Indicator fails to light.
5. When batteries are removed, the remote control erases all programmed settings. The control must be reprogrammed after insertion of new batteries.

Remote Control Operation − Quick Start

NOTE: When transmitting a command from the remote control to the unit, be sure to point the control toward the right side of the unit. The unit confirms receipt of a command by sounding an audible beep.

1. Turn the unit on by pushing the **ON/OFF** button.
2. If there is a preference for °C rather than °F (default), press and hold the increase ▲ and decrease ▼ temperature set point buttons together for approximately 3 seconds.
3. Select the desired mode by pushing the mode button.

Fig. 6 − Modes

4. Select the temperature set point by pointing the control toward the unit and pressing the increase/decrease temperature set point buttons until the desired temperature appears on screen.
5. Select the desired fan speed by pressing the **FAN** button.

NOTE: If the unit is operating in DRY or AUTO mode, the fan speed will be automatically set.

6. Set the airflow direction. When the unit is turned on, the up−down airflow louvers default to the cooling or heating position. The user can adjust the horizontal up−down airflow louver position by pushing the **DIRECT** button or have continuous louver movement by pressing the **SWING** button.

Manual Operation

If the remote control is lost, damaged, or the batteries are exhausted, the **MANUAL** button can be used to run the unit.

When the **MANUAL** button is pressed once, the **AUTO** mode takes affect (heat or cool). When this button is pressed twice, the system enters the **TEST** mode and runs for 30 minutes in the **COOLING** mode (it runs in **AUTO** mode afterward). When pressed three times, the system turns OFF.

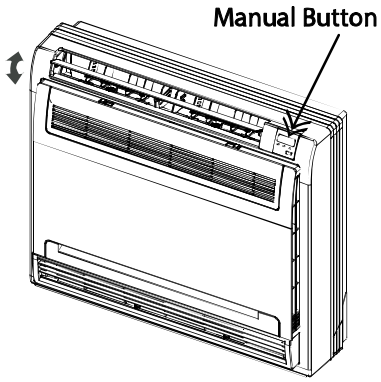

Fig. 7 − Manual Button

The set conditions of manual operation are as follows:

- Preset set point: 76°F (24°C)
- Fan speed: **AUTO**
- Discharge air direction: Pre−set position based on operation in “Cool”or “Heat” mode.

REMOTE CONTROL FUNCTIONS

Pressing the On/Off Button

When the air conditioner is not in operation, the remote control displays the last set point and mode.

- Press the On/Off button to start the unit.
  - The unit starts in the last operating mode and set point. The **ON/OFF** indicator appears.
- Press the button On/Off to stop the unit.
  - All the indicator lights on the unit go out, and the remote control displays the set point and mode.

NOTE: If the On/Off button is pressed too soon after a stop, the compressor will not start for 3 to 4 minutes due to the inherent protection against frequent compressor cycling. The unit only emits an audible beep when the signals are received correctly.

Selecting an Operating Mode

Use the **OPERATING** Mode button to select one of the available modes.

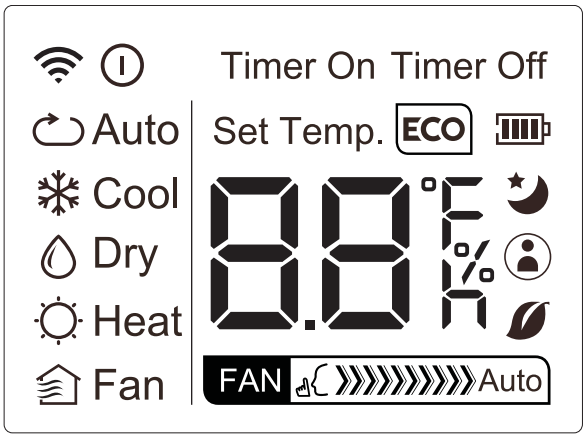

Fig. 8 − Display

Setting the Room Temperature Set Point

Press the increase temperature set point ▲ and decrease ▼ buttons to raise or lower the temperature.

The unit confirms the signal receipt with a beep and the value of the set temperature appears on the display and changes accordingly. The temperature can be set between 62°F (17°C) and 86°F (30°C) in increments of 1°F or 1°C.

NOTE: In the Cooling mode, if the temperature selected is higher than the room temperature, the unit will not start. The same applies for the Heating mode if the selected temperature is lower than the room temperature.

Selecting the Fan Speed

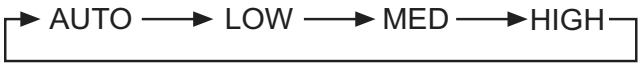

A14362

Fig. 9 − Fan Speeds

The fan speed can be selected by pressing the **FAN** button.

NOTE: When the unit is on, the fan runs continuously in cooling or heating. When in heating, there might be situations where the fan will slow down or shut off to prevent cold blow.

Selecting the Up−Down Airflow Louver Position

To optimize comfort, the horizontal louver should be adjusted as shown below.

When COOLING

Adjust the up−down airflow louver downwards or horizontally (see Fig. 10).

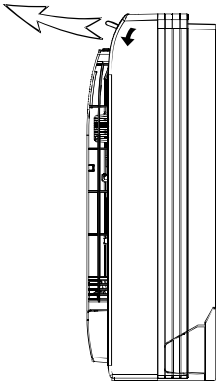

A150658

Fig. 10 − Air flow

When HEATING

Adjust the up−down airflow louver vertically (see Fig. 11).

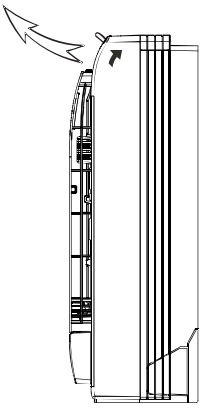

A150659

Fig. 11 − Air flow

The horizontal up−down airflow louvers can be adjusted by pressing the **DIRECT** button in the remote control and can be set to be stationary or moving continuously pressing the **SWING** button. The up−down airflow louver position is stored in the settings, however it is deactivated when the **TURBO** or **MANUAL** settings are set, or when a power interruption takes place.

Air Direction

Press the **DIRECT** button repeatedly to choose one of the up−down airflow louver positions. Every time this button is pushed, the specific louver swings by 30 degrees.

In the **COOLING**, **DEHUMIDIFICATION**, and **FAN ONLY** modes, the up−down airflow louver swings in the cooling range. In the **HEATING** mode, the louver swings in the heating range.

NOTE: Always use the remote control to adjust the up−down airflow louver position, otherwise abnormal operation may occur. If the horizontal louver is manually adjusted out of its range, power the unit off and then back on again.

Auto Swing

For automatic up−down airflow louver swing, push the **SWING** button.

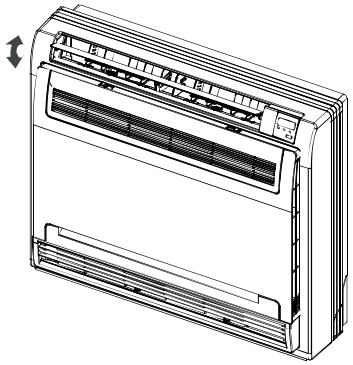

A150656

Fig. 12 − Manual Button

Selecting Right−Left Direction of the Louver

The right-left louvers can be adjusted manually to direct the airflow to achieve optimal comfort in the space a knob can be found on the right side and the left side of the louvers.

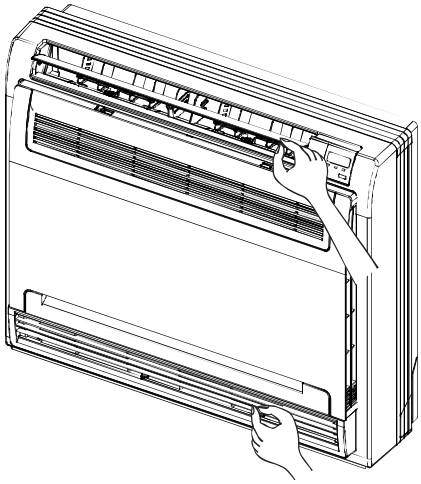

A150657

Fig. 13 − Louver

CAUTION

Do not adjust the up−down airflow louver by hand. When adjusting by hand, the mechanism may not operate properly or condensation may drip from the air outlets.

Adjust the Air Flow Direction Left and Right

Hold the knob and move the louver. Locate the knob on the left−side and the right−side blades (see Fig. 13).

AIRFLOW SELECTION

1. Open the front panel.

CAUTION

Before opening the front panel be sure to stop the operation and turn the breaker OFF. Do not touch the metal parts on the inside of the indoor unit, as it may result in injury.

2. Make the airflow selection that best suits you.

When setting the air flow selection switch to .

- The air conditioner automatically determines the appropriate blowing pattern based on the operating mode or situation.

Table 1 – Operating Mode

OPERATING MODE	COOL MODE		HEAT MODE	
Situation	When the room totally cools, or when one hour has passed since turning on the air conditioner	At the start of the operation or other times when the room is not totally cooled.	At times other than below (normal time)	At the start or when the air temperature is low.
Blowing Pattern	So air does not come into direct contact with people, air is blown from the upper air outlet, and the room temperature is equalized.	Air is blown from the upper and lower air outlets for high speed cooling during the COOL mode, and for filling the room with warm air during the HEAT mode (see Fig. 14).		So air does not come into direct contact with people, air blows from the upper air outlet.

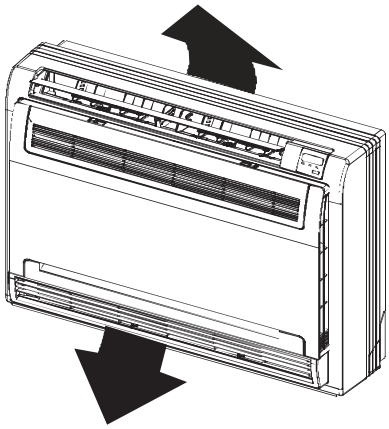

Fig. 14 − Air Blows from upper and lower outlets

Air is blown from the upper air outlet during the **DRY** mode, so cold air does not come into direct contact with people.

When Setting the Air Outlet Selection Switch to

- Regardless of the operating mode or situation, air blows from the upper air outlet.
- Use this switch when you do not want air coming from the lower air outlet; for example while sleeping.

TIMER FUNCTION

TIMER ON (to start the unit) and **TIMER OFF** (to stop the unit) can be used separately or together.

Timer ON only

This function allows the unit to start automatically at the set time. The **TIMER ON** can be set while the unit is on or off.

UNIT ON

a. Press the **TIMER ON** button to initiate the auto-on time sequence. The set time is displayed in the remote control display. Every time the **TIMER ON** button is pressed, the time increases by 30 minutes, up to 10 h. It increases by 60 minutes, afterwards, until the time setting reaches 24 h.

b. When the **TIMER ON** is set, the TIMER light on unit illuminates. The unit continues to run at the set time.

UNIT OFF

a. Set the timer described in the **UNIT ON** section.

b. The unit starts at the set time.

Adjust the **TIMER ON** settings to 0.0 to cancel this option.

Timer OFF only

This function allows the unit to stop automatically at the set time. The timer can be set while the unit is on or while it is off.

UNIT ON

a. Press the **TIMER OFF** button to initiate the auto−off time sequence. The set time appears on the remote control display. Every time the **TIMER OFF** button is pressed, the time increases by 30 minutes, up to 10 h. It increases by 60 minutes, afterwards, until the time settings reach 24 h.

b. When the **TIMER OFF** is set, the timer light on the unit illuminates and the unit turns off automatically at the set time.

UNIT OFF

a. Set the **TIMER** off as described in the **UNIT ON** section. The **TIMER** display on the unit illuminates and the unit remains off.

b. Adjust the **TIMER ON** settings to 0.0 to cancel this option.

Timer ON and Timer OFF

Use both functions to program the unit to turn on and shut off at specified times.

UNIT OFF

a. Set **TIMER ON** as previously described.

b. Set **TIMER OFF** as previously described. The unit starts automatically at the set **TIME ON** and turns off at the set **TIME OFF**.

UNIT ON

a. Set **TIME OFF** as previously described.

b. Set **TIME ON** as previously described. The unit turns off automatically at the set **TIME OFF** and turns on at the set **TIME ON**.

Sleep Mode

SLEEP mode is used to conserve energy and can be used when the unit is in the **COOL**, **HEAT** or **AUTO** mode only.

Cool Mode

a. Push the **SLEEP** button. After 1 hour the set point raises by 1.8°F (1°C). After another hour, the set point raises by another 1.8°F (1°C) and the fan runs in a low speed. The unit shuts off 5 hours after setting the **SLEEP** mode. The **SLEEP** mode cancels if either the “Mode”, “TEMP”, “Fan”, “Timer”, or “On/Off” buttons on the remote control is pressed.

Heat Mode

Same as cooling mode however set points are lowered by 1.8°F (1°C).

Turbo Mode

Use the **TURBO** mode to cool or heat the room rapidly.

a. Press the **TURBO** button. An audible “beep” is heard if the indoor unit supports this function. The fan runs on super high speed. The **TURBO** mode terminates automatically 20 minutes after pushing the **TURBO** mode button. It can be terminated immediately by selecting the **TURBO** mode again. When the **TURBO** mode is terminated, the unit reverts to the original setting.

Self Clean Mode

Press the “Self Clean” button to activate or deactivate the self−cleaning function. Under this function, the air conditioner automatically cleans and dries the evaporator. The cleaning cycle takes 30 minutes, after which the unit turns off automatically. Press **SELF CLEAN** on the middle of the cycle cancels the operation and turn off the unit. This function can be activated only on **COOL** or **DRY** mode.

Follow Me Mode

Press the “Follow Me” button to activate or deactivate this function. Under this setting, the temperature that appears in the remote control is the actual temperature at its location. The remote control sends this signal to the air conditioner every 3 minutes. This function is not available for **DRY** and **FAN** modes.

Freeze Protection Mode

Press the “FP” button for approximately 2 seconds to activate or deactivate the freeze protection mode (heating set back). The indoor unit displays “FP”.

NOTE: This function is only available in the heating mode.

Under this function, the unit operates at high fan speed and the coil temperature automatically sets to 46°F (8°C). This mode can also be deactivated by pressing the “On/Off”, “Sleep”, “Mode”, “Fan”, or either “TEMP” buttons.

Silence Mode

NOTE: The Silence Mode (SLC Button) is not available on this model.

LED Light

Press the LED button to turn the display light on and off.

Resetting the Remote Control

If the batteries in the remote control are removed, the current settings will be cancelled and the control returns to the initial settings and will be in standby mode. Push the **ON/OFF** button to activate it.

Time Delay

If the On/Off button is pressed too soon after a stop, the compressor will not start for 3 to 4 minutes due to the inherent protection against frequent compressor cycling. The unit only emits an audible beep when the signals are received correctly.

Heating Features

If the unit is in the heating mode, there is a delay when the fan starts. The fan starts only after the coil is warmed up to prevent cold blow.

Auto Defrost Operation

In heating mode, if the outdoor coil is frosted, the indoor fan and outdoor fan turns off while the system removes the frost on the outdoor coil. The system automatically reverts to normal operation when frost is removed from the outdoor unit.

Auto Start

If the power fails while the unit is operating, the unit stores the operating condition, and it will start operation automatically under those conditions when the power is restored.

CLEANING, MAINTENANCE AND TROUBLESHOOTING

▲ CAUTION

ELECTRICAL SHOCK HAZARD

Failure to follow this caution may result in personal injury or death.
Always turn off power to the system before performing any cleaning or maintenance to the system. Turn off the outdoor disconnect switch located near outdoor unit. Be sure to disconnect indoor unit if on a separate switch.

▲ CAUTION

EQUIPMENT DAMAGE/OPERATION HAZARD

Failure to follow this caution may result in equipment damage or improper unit operation.
Operating the system with dirty air filters may damage the indoor unit and could cause reduced cooling performance, intermittent system operation, frost build−up on indoor coil or blown fuses.

Periodic Maintenance

Periodic maintenance is recommended to ensure proper operation of the unit. Recommended maintenance intervals may vary depending on the installation environment, e.g., dusty zones, etc. (refer to Table 2).

▲ CAUTION

CUT HAZARD

Failure to follow this caution may result in personal injury.

The coil fins are very sharp. Use caution when cleaning.

Always wear safety protection.

Cleaning the Coil

Clean the coil at the beginning of each cooling season, or when necessary. Use a vacuum cleaner or a long−bristle brush to avoid damage to the coil fins.

Air Filters

Remove and clean the air filters once a month.

NOTE: If air filters show signs of excessive wear or are torn, they must be replaced. Contact your local dealer for replacement filters.

1. Open the front panel.

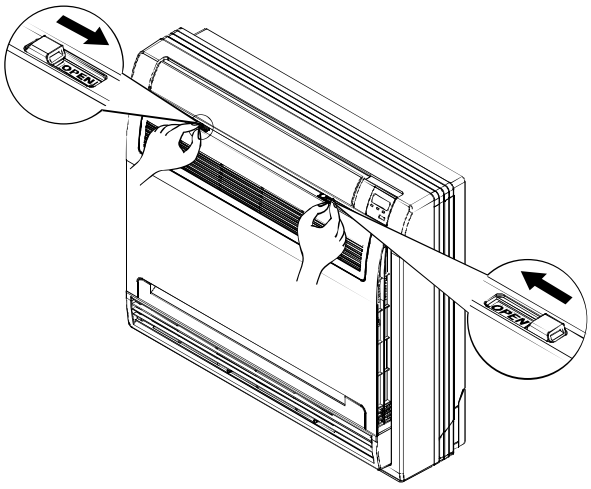

A150660

Fig. 15 − Open the Front Panel

2. Remove the air filter.

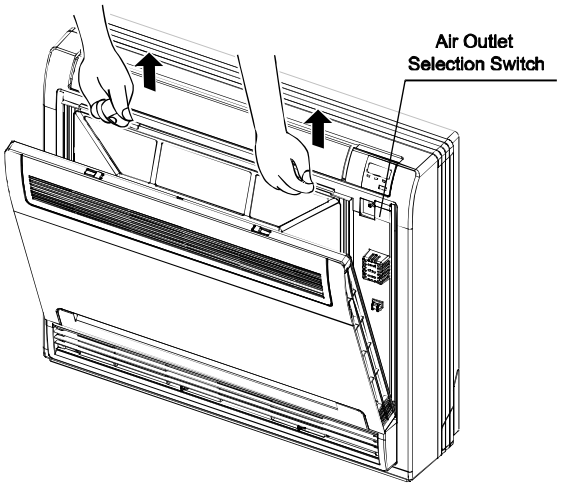

A150661

Fig. 16 − Remove the Air Filter

3. Remove the carbon filter. Hold the frame's tabs and remove the four claws. The carbon filter can be renewed by washing it with water once every 6 months. It is recommended to replace the carbon filter every year.

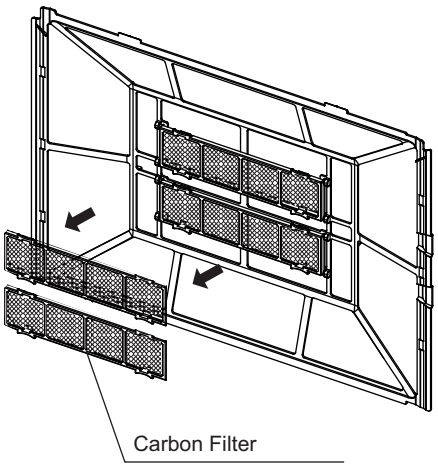

A150680

Fig. 17 − Carbon Filter

4. Clean the air filter. A vacuum cleaner or pure water may be used to clean the air filter. If the dust accumulation is excessive, please use soft brush and mild detergent to clean it and dry out in cool place.

IMPORTANT: The air−in side should face up when using vacuum cleaner. The air−in side should face down when using water.

5. Set the air filter and the carbon filter as they were and close the front panel. Operating the unit without the air filters may result in equipment damage or even failure as dust will accumulate inside the indoor unit.

▲ CAUTION

EQUIPMENT DAMAGE HAZARD

Failure to follow this caution may result in equipment damage.
When cleaning the front panel, do not use water hotter than 105°F (40.6°C) and do not pour water onto the fan coil. Do not use abrasive or petroleum based cleaners as they may damage the front panel.

Indoor Unit Front Panel

To clean the front panel on the indoor unit, wipe the outside with a soft, dry cloth.

Preparing for Extended Shutdown Period

Clean the filters and reposition them in the unit. Operate the unit in Fan only mode for 12 hours to dry all internal parts.

Turn main power supply off and remove batteries from the remote control.

System Operation Recommendations

The items outlined in the following list help to assure proper system operation:

- Replace both remote control batteries at the same time.
- Point the remote control toward the unit display panel when transmitting a command.
- Keep doors and windows closed while unit is operating.
- Contact an authorized service representative if a problem arises that cannot be easily resolved.
- Do not perform cleaning or maintenance activities while the unit is on.
- Keep the display panel on the unit away from direct sunlight and heat as this may interfere with remote control transmissions.
- Do not block air intakes and outlets on the indoor or outdoor units.

Energy Saving Recommendations

The following recommendations adds greater efficiency to the ductless system:

- Select a comfortable thermostat setting and leave it at chosen setting. Avoid continually raising and lowering the setting.
- Keep the filter clean. Frequent cleaning may be necessary depending on indoor air quality.
- Use drapes, curtains or shades to keep direct sunlight from heating the room on very hot days.
- Limit the unit's run time by using the **TIMER** function.
- Do not obstruct the air intake on the front panel.
- Turn on the air conditioning unit before the indoor air becomes too uncomfortable.

Troubleshooting

Refer to Table 3 before contacting your local dealer.

Table 2 – Periodic Maintenance

INDOOR UNIT	EVERY MONTH	EVERY 6 MONTHS	EVERY YEAR
Clean Air Filter*	•		•
Replace Carbon Filter			•
Change Remote Control Batteries			•
OUTDOOR UNIT	**EVERY MONTH**	**EVERY 6 MONTHS**	**EVERY YEAR**
Clean Outdoor Coil from Outside		•	
Clean Outdoor Coil from Inside†			•
Blow Air Over Electric Parts†			•
Check Electric Connection Tightening†			•
Clean Fan Wheel†			•
Check Fan Tightening†			•
Clean Drain Pans†			•

* Increase frequency in dusty zones.
† Maintenance to be carried out by qualified service personnel. Refer to the Installation Manual

Table 3 – Troubleshooting

PROBLEM	POSSIBLE CAUSE	SOLUTION
Unit/System Does Not Work	• The circuit breaker has tripped or a fuse has blown. • Power failure. • Diagnostic lights illuminate.* • Voltage is too low.	• Reset the circuit breaker or replace the fuse with the specified replacement fuse. • Restart operation when the power is restored. • Call your service representative. • Call your service representative.
Cooling is Not Working Properly	• The filter is blocked with dust. • Temperature is not set properly. • A window or door is open. • The outdoor unit is obstructed. • The fan speed is too low. • The operation mode is in Fan instead of Cool.	• Clean the air filter. • Check the temperature and reset if necessary. • Close the window or door. • Remove the obstruction. • Change the fan speed selection. • Change the operating mode to Cool or reset the unit.
Heating is Not Working Properly	• The filter is blocked with dust. • Temperature is set too low. • A window or door is open. • The outdoor unit is obstructed.	• Clean the air filter. • Check the temperature and reset if necessary. • Close the window or door. • Remove the obstruction.
Unit Stops During Operation	• The Off timer is not operating correctly. • Diagnostic lights illuminate.*	• Restart the operating mode. • Call your service representative.

* Diagnostic lights are a combination of lights that will illuminate in the display area on the unit. They are a combination of the lights you see during normal operation.

©2016 Bryant Heating & Cooling Systems 7310 W. Morris St. Indianapolis, IN 46231
Edition Date:10/16
Catalog No. OM619RF—03
Manufacturer reserves the right to discontinue, or change at any time, specifications or designs without notice and without incurring obligations.
Replaces: OM619RF—538PR—02