MODEL 126CNA
PREFERRED™ SERIES AIR CONDITIONER
WITH PURON® REFRIGERANT
1-1/2 TO 5 NOMINAL TONS

bryant®

Product Data

Puron

Preferred™ SERIES

Bryant's Air Conditioners with Puron® refrigerant provide a collection of features unmatched by any other family of equipment. The 126CNA has been designed utilizing Bryant's Non-ozone depleting Puron® refrigerant. The environmentally sound refrigerant allows you to make a responsible decision in the protection of the earth's ozone layer.

This product has been designed and manufactured to meet Energy Star® criteria for energy efficiency when matched with appropriate coil components. Refer to the combination ratings in the AHRI Directory for system combinations that meet Energy Star® guidelines.

NOTE: **Ratings contained in this document are subject to change at any time. Always refer to the AHRI directory (www.ahridirectory.org) for the most up-to-date ratings information.**

INDUSTRY LEADING FEATURES / BENEFITS

Efficiency

- 14 - 17 SEER / 11.7- 13 EER
- Microtube Technology™ refrigeration system
- Indoor air quality accessories available

Sound

- Sound level as low as 68 dBA
- Compressor sound blanket standard

Comfort

- System supports Edge® Thermidistat™ or standard thermostat controls

Reliability

- Non-ozone depleting Puron® refrigerant
- Scroll compressor
- Internal pressure relief valve
- Internal thermal overload
- Filter drier
- High and low pressure switches
- Balanced refrigeration system for maximum reliability

Durability

DuraGuard™ Plus protection package:

- Solid, durable sheet metal construction
- Louvered coil guard
- Baked-on, complete outer coverage, powder paint

Applications

- Long-line - up to 250 feet (76.20 m) total equivalent length, up to 200 feet (60.96 m) condenser above evaporator, or up to 80 ft. (24.38 m) evaporator above condenser (See Longline Guide for more information.)
- Low ambient (down to -10°F/-23°C)) with accessory kit

MODEL NUMBER NOMENCLATURE

1	2	3	4	5	6	7	8	9	10	11	12	14
N	N	N	A	A/N	N	N	N	N	A/N	A/N	N	A
1	**2**	**6**	**C**	**N**	**A**	**0**	**3**	**6**	**0**	**0**	**0**	**A**
Product Family	Tier	SEER	Major Series	Voltage	Variations	Cooling Capacity			Open	Open	Open	Minor Series
1=AC	2= Preferred	6=16 SEER	C=Puron	N= 208–230–1 or 208/230–1	A = Standard				0= Not Defined	0= Not Defined	0= Not Defined	A = Original Series

Use of the AHRI Certified TM Mark indicates a manufacturer's participation in the program For verification of certification for individual products, go to www.ahridirectory.org.

This product has been designed and manufactured to meet Energy Star® criteria for energy efficiency when matched with appropriate coil components. However, proper refrigerant charge and proper air flow are critical to achieve rated capacity and efficiency. Installation of this product should follow all manufacturing refrigerant charging and air flow instructions. **Failure to confirm proper charge and air flow may reduce energy efficiency and shorten equipment life.**

STANDARD FEATURES

Feature	18	24	30	36	42	48	60
Puron Refrigerant	X	X	X	X	X	X	X
Maximum SEER *	17.0	17.0	17.0	17.0	17.0	17.0	16.0
Scroll Compressor	X	X	X	X	X	X	X
Field Installed Filter Drier	X	X	X	X	X	X	X
Front Seating Service Valves	X	X	X	X	X	X	X
Internal Pressure Relief Valve	X	X	X	X	X	X	X
Internal Thermal Overload	X	X	X	X	X	X	X
Long Line capability	X	X	X	X	X	X	X
Low Ambient capability with Kit	X	X	X	X	X	X	X
High Pressure Switch	X	X	X	X	X	X	X
Low Pressure Switch	X	X	X	X	X	X	X
Compressor Sound Blanket	X	X	X	X	X	X	X
Louvered Coil Guard	X	X	X	X	X	X	X

* With approved combinations
X = Standard

PHYSICAL DATA

UNIT SIZE – VOLTAGE, SERIES	18–A	24–A	30–A	36–A	42–A	48–A	60–A
Compressor Type	Scroll						
REFRIGERANT	Puron® (R–410A)						
Control	TXV (Puron Hard Shutoff)						
Charge lb (kg)	6.20 (2.81)	6.60 (2.99)	9.50 (4.31)	9.60 (4.35)	11.70 (5.31)	12.50 (5.67)	14.00 (6.35)
COND FAN	Propeller Type, Direct Drive						
Air Discharge	Vertical						
Air Qty (CFM)	1800	2250	2750	3500	3200	4250	4700
Motor HP	1/12	1/12	1/12	1/8	1/12	1/3	1/3
Motor RPM	1100	800	800	800	800	750	815
COND COIL							
Face Area (Sq ft)	14.75	19.40	17.60	17.60	25.12	30.15	30.15
Fins per In.	25	25	20	20	20	20	20
Rows	1	1	2	2	2	2	2
Circuits	4	5	6	6	8	10	12
VALVE CONNECT. (In. ID)							
Vapor	3/4			7/8			
Liquid	3/8”						
REFRIGERANT TUBES* (In. OD)							
Rated Vapor*	3/4			7/8			1 1/8
Max Liquid Line	3/8”						

* Units are rated with 25 ft (7.6 m) of lineset length. See Vapor Line Sizing and Cooling Capacity Loss table when using other sizes and lengths of lineset.
Note: See unit Installation Instruction for proper installation.

REFRIGERANT PIPING LENGTH LIMITATIONS

Liquid Line Sizing and Maximum Total Equivalent Lengths† for Cooling Only Systems with Puron® Refrigerant:

The maximum allowable length of a residential split system depends on the liquid line diameter and vertical separation between indoor and outdoor units.

See Table below for liquid line sizing and maximum lengths :

Maximum Total Equivalent Length
Outdoor Unit BELOW Indoor Unit

Size	Liquid Line Connection	Liquid Line Diam. w/ TXV	AC with Puron Refrigerant Maximum Total Equivalent Length†: Outdoor unit BELOW Indoor Vertical Separation ft (m)								
			0–5 (0–1.5)	6–10 (1.8–3.0)	11–20 (3.4–6.1)	21–30 (6.4–9.1)	31–40 (9.4–12.2)	41–50 (12.5–15.2)	51–60 (15.5–18.3)	61–70 (18.6–21.3)	71–80 (21.6–24.4)
18000 AC with Puron	3/8	1/4	150	150	125	100	100	75	––	––	––
		5/16	250*	250*	250*	250*	250*	250*	250*	225*	150
		3/8	250*	250*	250*	250*	250*	250*	250*	250*	250*
24000 AC with Puron	3/8	1/4	75	75	75	50	50	––	––	––	––
		5/16	250*	250*	250*	250*	250*	225*	175	125	100
		3/8	250*	250*	250*	250*	250*	250*	250*	250*	250*
30000 AC with Puron	3/8	1/4	30	––	––	––	––	––	––	––	––
		5/16	175	225*	200	175	125	100	75	––	––
		3/8	250*	250*	250*	250*	250*	250*	250*	250*	250*
36000 AC with Puron	3/8	5/16	175	150	150	100	100	100	75	––	––
		3//8	250*	250*	250*	250*	250*	250*	250*	250*	250*
42000 AC with Puron	3/8	5/16	125	100	100	75	75	50	––	––	––
		3/8	250*	250*	250*	250*	250*	250*	250*	250*	150
48000 AC with Puron	3/8	3/8	250*	250*	250*	250*	250*	250*	230	160	––
60000 AC with Puron	3/8	3/8	250*	250*	250*	225*	190	150	110	––	––

*** Maximum actual length not to exceed 200 ft (61 m)**

† Total equivalent length accounts for losses due to elbows or fitting. See the Long Line Guideline for details.

–– = outside acceptable range

Maximum Total Equivalent Length
Outdoor Unit ABOVE Indoor Unit

Size	Liquid Line Connection	Liquid Line Diam. w/ TXV	AC with Puron Refrigerant Maximum Total Equivalent Length†: Outdoor unit ABOVE Indoor Vertical Separation ft (m)							
			25 (7.6)	26–50 (7.9–15.2)	51–75 (15.5–22.9)	76–100 (23.2–30.5)	101–125 (30.8–38.1)	126–150 (38.4–45.7)	151–175 (46.0–53.3)	176–200 (53.6–61.0)
18000 AC with Puron	3/8	1/4	175	250*	250*	250*	250*	250*	250*	250*
		5/16	250*	250*	250*	250*	250*	250*	250*	250*
		3/8	250*	250*	250*	250*	250*	250*	250*	250*
24000 AC with Puron	3/8	1/4	100	125	175	200	225*	250*	250*	250*
		5/16	250*	250*	250*	250*	250*	250*	250*	250*
		3/8	250*	250*	250*	250*	250*	250*	250*	250*
30000 AC with Puron	3/8	1/4	30	––	––	––	––	––	––	––
		5/16	250*	250*	250*	250*	250*	250*	250*	250*
		3/8	250*	250*	250*	250*	250*	250*	250*	250*
36000 AC with Puron	3/8	5/16	225*	250*	250*	250*	250*	250*	250*	250*
		3/8	250*	250*	250*	250*	250*	250*	250*	250*
42000 AC with Puron	3/8	5/16	175	200	250*	250*	250*	250*	250*	250*
		3/8	250*	250*	250*	250*	250*	250*	250*	250*
48000 AC with Puron	3/8	3/8	250*	250*	250*	250*	250*	250*	250*	250*
60000 AC with Puron	3/8	3/8	250*	250*	250*	250*	250*	250*	250*	250*

*** Maximum actual length not to exceed 200 ft (61 m)**

† Total equivalent length accounts for losses due to elbows or fitting. See the Long Line Guideline for details.

–– = outside acceptable range

REFRIGERANT CHARGE ADJUSTMENTS

Liquid Line Size	Puron Charge oz/ft (g/m)
3/8	0.60 (17.74) (Factory charge for lineset = 9 oz / 266.16 g)
5/16	0.40 (11.83)
1/4	0.27 (7.98)

Units are factory charged for 15 ft (4.6 m) of 3/8" liquid line. The factory charge for 3/8" lineset 9 oz. When using other length or diameter liquid lines, charge adjustments are required per the chart above.

Charging Formula:

[(Lineset oz/ft x total length) – (factory charge for lineset)] = charge adjustment

Example 1: System has 15 ft of line set using existing 1/4" liquid line. What charge adjustment is required?

Formula: (.27 oz/ft x 15ft) – (9 oz) = (-4.95) oz.

Net result is to remove 4.95 oz of refrigerant from the system

Example 2: System has 45 ft of existing 5/16" liquid line. What is the charge adjustment?

Formula: (.40 oz/ft. x 45ft) – (9 oz.) = 9 oz.

Net result is to add 9 oz of refrigerant to the system

NOTE: Conditions must be favorable for charging by subcooling method. Indoor temperature must be 70°F to 80°F (21.1°C to 26.7°C), and outdoor temperature must be 70°F to 100°F (21.1°C to 37.8°C). If outside these conditions, adjust charge for long line sets by weigh-in method.

LONG LINE APPLICATIONS

An application is considered Long Line, when the refrigerant level in the system requires the use of accessories to maintain acceptable refrigerant management for systems reliability. See Accessory Usage Guideline table for required accessories. Defining a system as long line depends on the liquid line diameter, actual length of the tubing, and vertical separation between the indoor and outdoor units.

For Air Conditioner systems, the chart below shows when an application is considered Long Line.

AC with Puron® Refrigerant Long Line Description ft (m) Beyond these lengths, a TXV is required

Total Length	Outdoor Unit Above or Below Indoor Unit
TXV required beyond 50 ft. (15.2 m)	TXV required beyond 20 ft. (6.1 m)

AC with Puron® Refrigerant Long Line Description ft (m) (Beyond these lengths, long line accessories are required)

Liquid Line Size	Units On Same Level	Outdoor Below Indoor	Outdoor Above Indoor
1/4 + TXV	No accessories needed within allowed lengths	No accessories needed within allowed lengths	175 (53.3)
5/16 + TXV	120 (36.6)	50 (15.2) vertical or 120 (36.6) total	120 (36.6)
3/8 + TXV	80 (24.4)	35 (10.7) vertical or 80 (24.4) total	80 (24.4)

Note: See Residential Piping and Long Line Guideline for details

VAPOR LINE SIZING AND COOLING CAPACITY LOSS

Acceptable vapor line diameters provide adequate oil return to the compressor while avoiding excessive capacity loss. The suction line diameters shown in the chart below are acceptable for AC systems with Puron refrigerant:

Vapor Line Sizing and Cooling Capacity Losses — Puron® Refrigerant 1-Stage Air Conditioner Applications

Unit Nominal Size (Btuh)	Maximum Liquid Line Diameters (In. OD)	Vapor Line Diameters (In. OD)	Cooling Capacity Loss (%) Total Equivalent Line Length ft. (m) 1-Stage AC with Puron								
			26–50 (7.9–15.2)	51–80 (15.5–24.4)	81–100 (24.7–30.5)	101–125 (30.8–38.1)	126–150 (38.4–45.7)	151–175 (46.0–53.3)	176–200 (53.6–61.0)	201–225 (61.3–68.6)	226–250 (68.9–76.2)
018	3/8	1/2	1	2	3	5	6	7	8	9	11
		5/8	0	1	1	1	2	2	2	3	3
		3/4	0	0	0	0	1	1	1	1	1
024	3/8	5/8	0	1	2	2	3	3	4	5	5
		3/4	0	0	1	1	1	1	1	2	2
		7/8	0	0	0	0	0	1	1	1	1
030	3/8	5/8	1	2	3	3	4	5	6	7	8
		3/4	0	0	1	1	1	2	2	2	3
		7/8	0	0	0	0	1	1	1	1	1
036	3/8	5/8	1	2	4	5	6	8	9	10	12
		3/4	0	1	1	2	2	3	3	4	4
		7/8	0	0	0	1	1	1	1	2	2
042	3/8	3/4	0	1	2	2	3	4	4	5	6
		7/8	0	0	1	1	1	2	2	2	3
		1 1/8	0	0	0	0	0	0	0	0	0
048	3/8	3/4	0	1	2	3	4	5	5	6	7
		7/8	0	0	1	1	2	2	2	3	3
		1 1/8	0	0	0	0	0	0	0	1	1
060	3/8	3/4	1	2	4	5	6	7	9	10	11
		7/8	0	1	2	2	3	4	4	5	5
		1 1/8	0	0	0	1	1	1	1	1	1

Applications in this area may be long line and may have height restrictions. See the *Residential Piping and Long Line Guideline*.

ACCESSORY THERMOSTATS

Part Number	Description	Capabilities			Heat Stages	Cooling Stages
		Gas	Electric	Heat Pump		
T6−WEM01	CôR™, Wi−Fi Programmable Relative Humidity Thermostat (HP or AC)	X	X	X	4	2
TSTPHA01	CôR™5, Programmable Thermostat (HP or AC)	X	X	X	3	2
TSTWHA01	CôR™5C, Wi−Fi Programmable Thermostat (HP or AC)	X	X	X	3	2
TSTPRH01	CôR™ 7, Wi−Fi Programmable Thermostat (HP or AC)	X	X	X	3	2
TSTWRH01	CôR™ 7C, Wi−Fi Programmable Relative Humidity Thermostat (HP or AC)	X	X	X	3	2
T6−PRH01−A	edge™ Programmable Relative Humidity Thermostat	X	X	X	3	2
T6−PAC01	edge™ Programmable Thermostat (HP or AC)	X	X	X	3	2
T6−NRH01	edge™ Non−Programmable Relative Humidity Thermostat	X	X	X	3	2
T6−NAC01	edge™ Non−Programmable Thermostat (HP or AC)	X	X	X	1	1

THERMOSTAT ACCESSORIES		
PART NUMBER	BRIEF DESCRIPTION	THERMOSTATS USED WITH
TSTATECM2W01	Rapid Connect (1−wire relay module)	CôR™ 7, CôR™ 7C
TSTATCR7TP01	CôR™ 7/ 7C Trim Plate	CôR™ 7, CôR™ 7C
TSTATCR5TP01	CôR™ 5/ 5C Trim Plate	CôR™ 5, CôR™ 5C
SYSTXBBRRS01	Indoor Remote Room Temperature Sensor	All T6− thermostats
TP−EXP01−A	ExP® Computer Programming Accessory	T6−P thermostats
TSTATXXCNV01*	Thermostat Conversion Kit (4 to 5 wire) − 10 pack	All Bryant® branded thermostats
TSTATXXSEN10†	Outdoor Air Temperature Sensor	All T6− thermostats

* Thermostat conversions kit is a 24−vac accessory that can turn a 4−wire thermostat application into a 5−wire application. The kit can also be used to replace a broken thermostat wire, or add an extra wire when needed. Do not use this kit with the AC model of the Base or Preferred Programmable thermostat.

† Outdoor air temperature sensor is an included accessory for TP−PRH01 and TP−NRH01. It is sold separately as an accessory for other models. It allows the temperature at a remote location (outdoors) to be displayed on the thermostat.

Wi−Fi® is a registered trademark of the Wi−Fi Alliance

ACCESSORIES

KIT NUMBER	DESCRIPTION	18−A	24−A	30−A	36−A	42−A	48−A	60−A
KSAFT0101AAA	FREEZE THERMOSTAT	X	X	X	X	X	X	X
KAATD0101TDR	TIME DELAY	X	X	X	X	X	X	X
KSALA0301410	LOW AMBIENT	X	X	X	X	X	X	X
KSALA0601AAA	MOTORMASTER	X	X	X	X	X	X	X
HC40GR236	MOTOR,FAN						X	X
LA01RA339	FAN						X	X
KSAHS2501AAA	HARD START	X	X	X	X	X	X	X
KSACY0101AAA	CYCLE PROTECTOR	X	X	X	X	X	X	X
KAACS0201PTC	KIT PTC	X	X	X	X	X	X	X
KAALS0201LLS	SOLENOID VALVE	X	X	X	X	X	X	X
KAAWS0101AAA	WINTER START	X	X	X	X	X	X	X
KAACH1701AAA	CRANKCASE HEATER	X	X	X	X			
KAACH1601AAA	CRANKCASE HEATER					X		
KSATX0201PUR	TXV; Copper	X	X	X				
KSATX0301PUR	TXV; Copper				X	X		
KSATX0401PUR	TXV; Copper						X	X
KSBTX0201PUR	TXV; Aluminum	X	X	X				
KSBTX0301PUR	TXV; Aluminum				X	X		
KSBTX0401PUR	TXV; Aluminum						X	X

X = Accessory

ACCESSORY USAGE GUIDELINE

ACCESSORY	REQUIRED FOR LOW–AMBIENT COOLING APPLICATIONS (Below 55°F/12.8°C)	REQUIRED FOR LONG LINE APPLICATIONS* (Over 80 ft./24.38 m)	REQUIRED FOR SEA COAST APPLICATIONS (Within 2 miles/3.22 km)
Ball Bearing Fan Motor	Yes†	No	No
Compressor Start Assist Capacitor and Relay	Yes	Yes	No
Crankcase Heater	Yes	Yes	No
Evaporator Freeze Thermostat	Yes	No	No
Hard Shut–Off TXV	Yes	Yes	Yes
Liquid Line Solenoid Valve	No	No	No
Motor Master® Control or Low–ambient Pressure Switch	Yes‡	No	No
Support Feet	Recommended	No	Recommended
Winter Start Control	Yes	No	No

* For tubing line sets between 80 and 200 ft. (24.38 and 60.96 m) and/or 35 ft. (10.7 m) vertical differential, refer to Residential Split–System Longline Application Guideline.

† Additional requirement for Low–Ambient Controller (full modulation feature) MotorMaster® Control.

‡ If unit equipped with ECM OD motor, both motor and fan need to be replaced per unit accessory guide to work properly. Unit will not meet AHRI rated efficiency once motor and fan are replaced to use this accessory.

Accessory Description and Usage (Listed Alphabetically)

1. Ball-Bearing Fan Motor

A fan motor with ball bearings which permits speed reduction while maintaining bearing lubrication.

Usage Guideline:

Required on all units when MotorMaster® is used.

2. Compressor Start Assist - Capacitor and Relay

Start capacitor and relay gives a ”hard” boost to compressor motor at each start up.

Usage Guideline:

Required for reciprocating compressors in the following applications:

- Long line
- Low ambient cooling
- Hard shut off expansion valve on indoor coil
- Liquid line solenoid on indoor coil

Required for single-phase scroll compressors in the following applications:

- Long line
- Low ambient cooling

Suggested for all compressors in areas with a history of low voltage problems.

3. Compressor Start Assist — PTC Type

Solid state electrical device which gives a ”soft” boost to the compressor at each start-up.

Usage Guideline:

Suggested in installations with marginal power supply.

4. Crankcase Heater

An electric resistance heater which mounts to the base of the compressor to keep the lubricant warm during off cycles. Improves compressor lubrication on restart and minimizes the chance of liquid slugging.

Usage Guideline:

Required in low ambient cooling applications.

Required in long line applications.

Suggested in all commercial applications.

5. Cycle Protector

The cycle protector is designed to prevent compressor short cycling. This control provides an approximate 5-minute delay after power to the compressor has been interrupted for any reason, including power outage, protector control trip, thermostat jiggling, or normal cycling.

6. Evaporator Freeze Thermostat

An SPST temperature-actuated switch that stops unit operation when evaporator reaches freeze-up conditions.

Usage Guideline:

Required when low ambient kit has been added.

7. Low-Ambient Pressure Switch Kit

A long life pressure switch which is mounted to outdoor unit service valve. It is designed to cycle the outdoor fan motor in order to maintain head pressure within normal operating limits (approximately 100 psig to 225 psig). The control will maintain working head pressure at low-ambient temperatures down to 0°F (-18°C) when properly installed.

Usage Guideline:

A Low-Ambient Pressure Switch or MotorMaster® Low-Ambient Controller must be used when cooling operation is used at outdoor temperatures below 55°F (12.8°C).

8. MotorMaster® Low-Ambient Controller

A fan-speed control device activated by a temperature sensor, designed to control condenser fan motor speed in response to the saturated, condensing temperature during operation in cooling mode only. For outdoor temperatures down to -10°F (-23°C), it maintains condensing temperature at 100°F ±10°F (37.8°C ± 5.5°C).

Usage Guideline:

A MotorMaster® Low Ambient Controller or Low-Ambient Pressure Switch must be used when cooling operation is used at outdoor temperatures below 55°F (12.8°C).

Suggested for all commercial applications.

9. Outdoor Air Temperature Sensor

Designed for use with Bryant Thermostats listed in this publication. This device enables the thermostat to display the outdoor temperature. This device also

is required to enable special thermostat features such as auxiliary heat lock out.

Usage Guideline:

Suggested for all Bryant thermostats listed in this publication.

Accessory Description and Usage (Listed Alphabetically) (Continued)

10. Support Feet

Four stick-on plastic feet that raise the unit 4 in. (101.6 mm) above the mounting pad. This allows sand, dirt, and other debris to be flushed from the unit base, minimizing corrosion.

Usage Guideline:

Suggested in the following applications:

Coastal installations.

Windy areas or where debris is normally circulating.

Rooftop installations.

For improved sound ratings.

11. Thermostatic Expansion Valve (TXV)

A modulating flow-control valve which meters refrigerant liquid flow rate into the evaporator in response to the superheat of the refrigerant gas leaving the evaporator.

Kit includes valve, adapter tubes, and external equalizer tube. Hard shut off types are available.

NOTE: When using a hard shut off TXV with single phase reciprocating compressors, a Compressor Start Assist Capacitor and Relay is required.

Usage Guideline:

Required to achieve AHRI ratings in certain equipment combinations. Refer to combination ratings.

Hard shut off TXV or LLS required in air conditioner long line applications.

Required for use on all zoning systems.

12. Time-Delay Relay

An SPST delay relay which briefly continues operation of indoor blower motor to provide additional cooling after the compressor cycles off.

NOTE: Most indoor unit controls include this feature. For those that do not, use the guideline below.

Usage Guideline:

For improved efficiency ratings for certain combinations of indoor and outdoor units. Refer to AHRI Unitary Directory.

13. Winter Start Control

This control is designed to alleviate nuisance opening of the low-pressure switch by bypassing it for the first 3 minutes of operation.

ELECTRICAL DATA

UNIT SIZE – SERIES	V/PH	OPER VOLTS*		COMPR		FAN	MCA	MAX FUSE† or CKT BRK AMPS
		MAX	MIN	LRA	RLA	FLA		
18–A	208/230/1	253	197	47.5	9.0	0.4	11.7	20
24–A				62.9	10.9	0.5	14.1	25
30–A				63.0	10.9	0.5	14.1	25
36–A				79.0	13.6	0.9	17.9	30
42–A				109.0	16.7	0.5	21.4	35
48–A				124.0	18.5	2.8	25.9	40
60–A				152.5	23.7	2.8	32.4	50

* Permissible limits of the voltage range at which the unit will operate satisfactorily

† Time–Delay fuse.

FLA – Full Load Amps
LRA – Locked Rotor Amps
MCA – Minimum Circuit Amps
RLA – Rated Load Amps
NOTE: Control circuit is 24V on all units and requires external power source. Copper wire must be used from service disconnect to unit. All motors/compressors contain internal overload protection.

Complies with 2010 requirements of ASHRAE Standards 90.1

A-WEIGHTED SOUND POWER LEVEL (dBA)

Unit Size – Voltage, Series	Standard Rating (dBA)	TYPICAL OCTAVE BAND SPECTRUM (dBA without tone adjustment)						
		125	250	500	1000	2000	4000	8000
18–A	71	64	66	67	68	63	59	53
24–A	72	65	66	67	69	65	60	53
30–A	71	71	71	66	69	59	59	55
36–A	69	67	71	65	64	60	57	50
42–A	68	66	64	64	64	61	59	54
48–A	68	67	65	67	65	59	55	50
60–A	73	67	68	68	71	63	55	52

NOTE: Tested in accordance with AHRI Standard 270–08 (not listed in AHRI).

CHARGING SUBCOOLING (TXV-TYPE EXPANSION DEVICE)

UNIT SIZE–VOLTAGE, SERIES	REQUIRED SUBCOOLING °F (°C)
18–A	8 (4.4)
24–A	9 (5.0)
30–A	11 (6.1)
36–A	10 (5.6)
42–A	13 (7.2)
48–A	8 (4.4)
60–A	9 (5.0)

DIMENSIONS

UNIT	SERIES	ELECTRICAL CHARACTERISTICS				A		B		C		D		E		F		G		H		I		J		K		OPERATING WEIGHT		SHIPPING WEIGHT		SHIPPING LENGTH / WIDTH (Sq.)		SHIPPING HEIGHT	
						INCH	MM	INCH	MM	INCH	MM	INCH	MM	INCH	MM	INCH	MM	INCH	MM	INCH	MM	INCH	MM	INCH	MM	INCH	MM	Lbs	Kgs	Lbs	Kgs	INCH	MM	INCH	MM
126CNA018000BAAA	A	Y	N	N	N	25 3/4	654.0	35 1/2	901.4	3/4	19.1	4 7/16	113.0	21 1/4	539.9	9 1/8	231.3	5/16	7.9	3	76.2	15	381.0	14 1/2	368.3	16 1/2	419.1	153	69.4	177	80.3	27 7/8	708.2	40	1015.8
126CNA024000BAAA	A	Y	N	N	N	31 3/16	792.5	35 1/2	901.4	3/4	19.1	6 9/16	166.1	24 11/16	626.3	9 1/8	231.3	5/16	7.9	3	76.2	15 1/2	393.7	16 1/2	419.1	17	431.8	174	78.9	205	93.0	33 5/16	846.6	40	1015.8
126CNA030000BAAA	A	Y	N	N	N	35	889.0	28 11/16	728.7	3/4	19.1	6 9/16	166.1	28 7/16	722.8	9 1/8	231.3	5/16	7.9	3	76.2	17 3/8	441.3	17 7/8	454.0	13 7/8	352.4	205	93.0	235	106.6	37 1/8	943.1	33 3/16	843.1
126CNA036000BAAA	A	Y	N	N	N	35	889.0	28 11/16	728.7	7/8	22.2	6 9/16	166.1	28 7/16	722.8	9 1/8	231.3	5/16	7.9	3	76.2	17 5/8	447.7	17 3/8	441.3	13 3/8	339.7	207	93.9	240	108.9	37 1/8	943.1	33 3/16	843.1
126CNA042000BAAA	A	Y	N	N	N	35	889.0	38 7/8	987.8	7/8	22.2	6 9/16	166.1	28 7/16	722.8	9 1/8	231.3	5/16	7.9	3	76.2	17 5/8	447.7	18	457.2	17 1/16	433.4	264	119.7	301	136.5	37 1/8	943.1	43 3/8	1102.2
126CNA048000BAAA	A	Y	N	N	N	35	889.0	45 11/16	1160.5	7/8	22.2	6 9/16	166.1	28 7/16	722.8	9 1/8	231.3	5/16	7.9	3	76.2	18	457.2	17 15/16	455.6	19 1/2	495.3	294	133.4	331	150.1	37 1/8	943.1	50 3/16	1274.9
126CNA060000BAAA	A	Y	N	N	N	35	889.0	45 11/16	1160.5	7/8	22.2	6 9/16	166.1	28 7/16	722.8	9 1/8	231.3	5/16	7.9	3	76.2	18	457.2	18	457.2	19 1/2	495.3	299	135.6	336	152.4	37 1/8	943.1	50 3/16	1274.9

208-230-1-60	208/230-3-60	460-3-60	575-3-60	Y=YES N=NO

NOTES:

1. ALLOW 24" (609.6) CLEARANCE TO SERVICE SIDE OF UNIT, 48" (1219.2) ABOVE UNIT, 6" (152.4) ON ONE SIDE, 12" (304.8) ON REMAINING SIDE, AND 24" (609.6) BETWEEN UNITS FOR PROPER AIRFLOW.
2. CENTER OF GRAVITY .
3. SERIES DESIGNATION IS THE 14TH POSITION OF THE UNIT MODEL NUMBER.

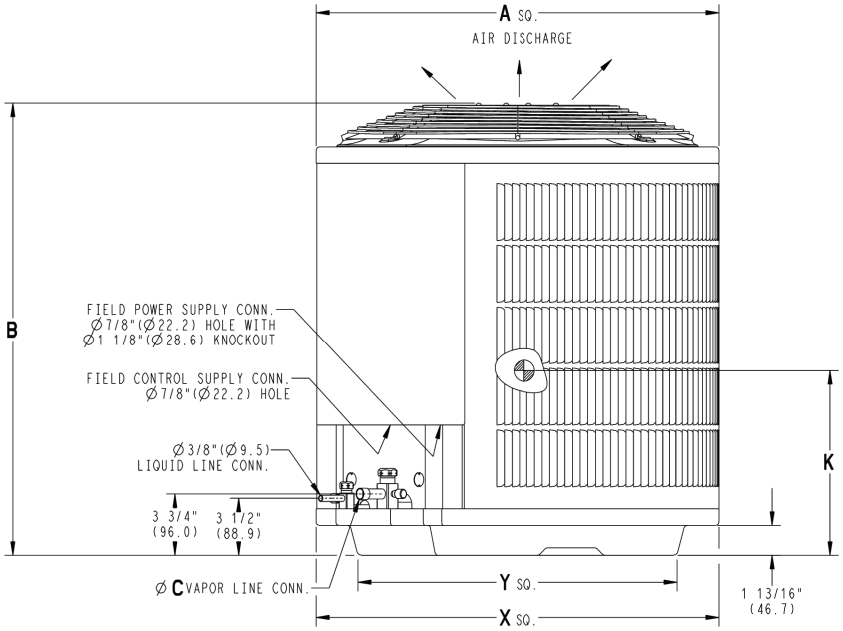

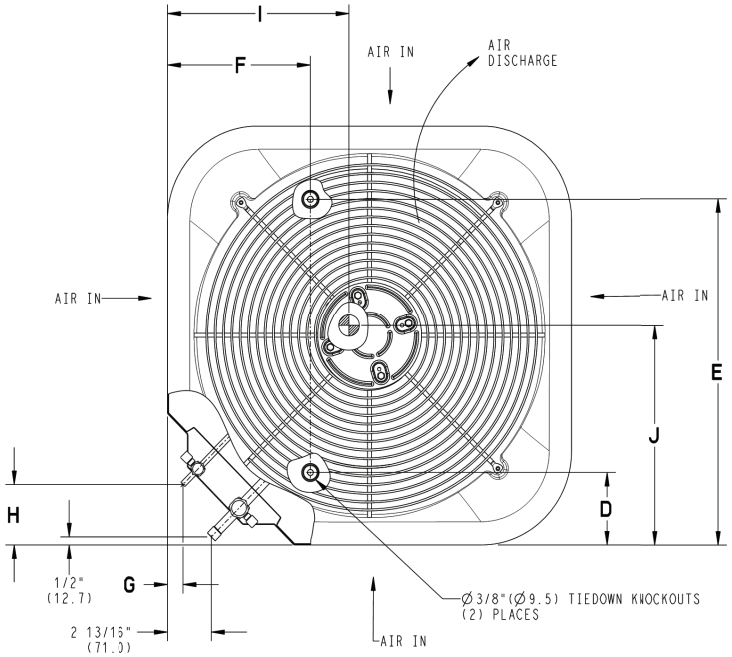

UNIT SIZE	"X" MINIMUM GROUND MOUNTING PAD APPLICATION DIMENSIONS		"Y" MINIMUM ROOF-TOP MOUNTING PAD APPLICATION DIMENSIONS	
-	23 1/8	587.3	17 7/8	454.6
18	25 3/4	654.0	20 7/16	518.5
24	31 3/16	792.5	22 15/16	583.2
30,36,42,48,60	35	889.0	26 3/4	679.7

NOTE: ALL DIMENSIONS IN INCH (MM)

U.S. ECCN: Not Subject to Regulation (N.S.R.)

SD5422-4 24APB6 REV. A

CLEARANCES

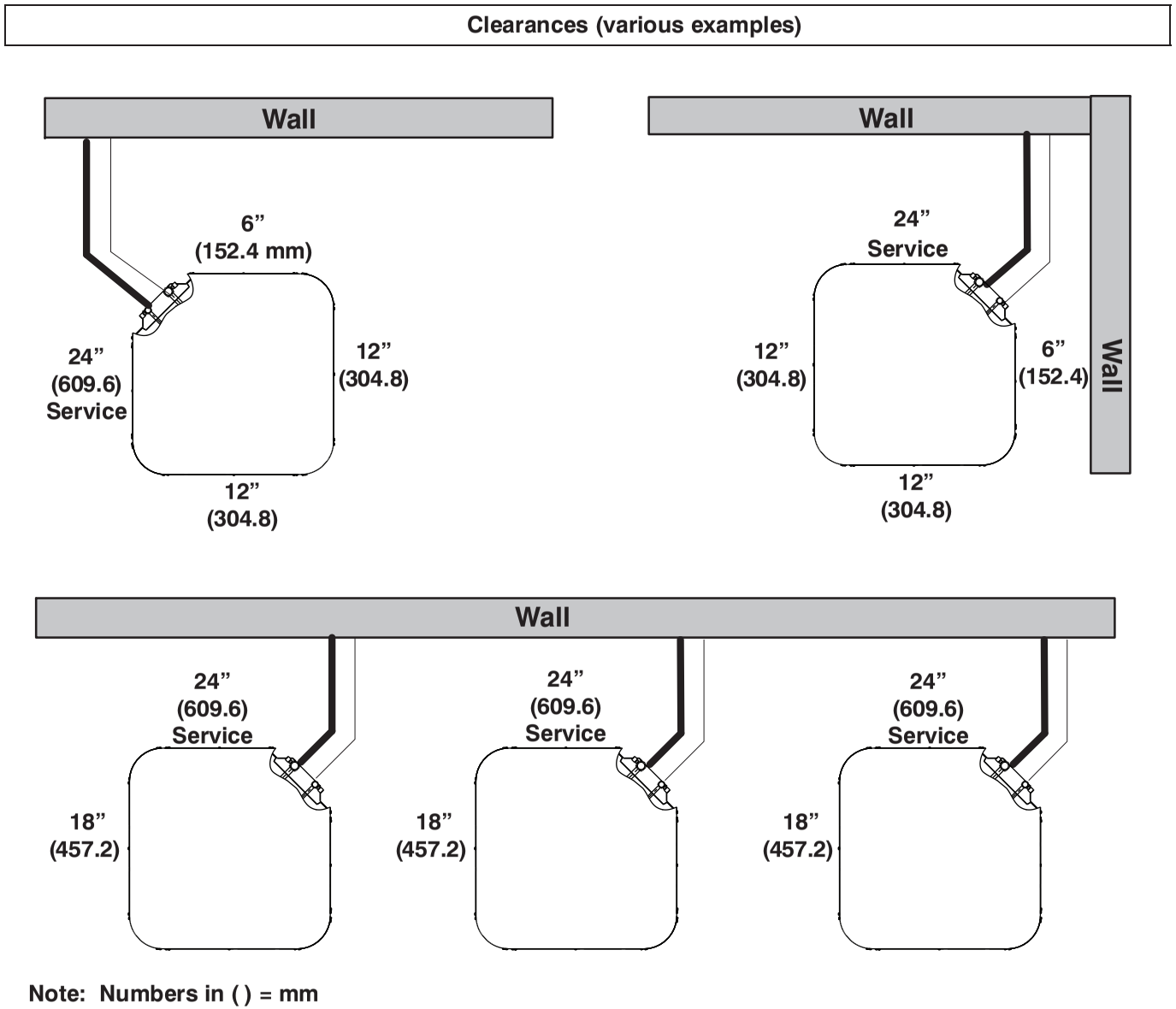

Note: Numbers in ( ) = mm

IMPORTANT: When installing multiple units in an alcove, roof well, or partially enclosed area, ensure there is adequate ventilation to prevent re-circulation of discharge air.

TESTED AHRI COMBINATION RATINGS*

NOTE: Ratings contained in this document are subject to change at any time.

For AHRI ratings certificates, please refer to the AHRI directory www.ahridirectory.org
Additional ratings and system combinations can be accessed via the Bryant database at:
http://cactaxcredits.info/bryant-ratings/hp_ratings_srch.php
Equipment performance calculator can be accessed at: http://rpmobbry.wrightsoft.com/

UNIT SIZE – SERIES	INDOOR MODEL	AHRI STANDARD RATINGS			
		COOLING			
				SEER	EER
		CAPACITY	FACTORY ENHANCE	TDR	
126CNA018–A	CAP**1917AL*	18000	TXV	14.5	12.2
126CNA024–A	CNPV*3117AL*	23800	TXV	15	12.5
126CNA030–A	CAP**3721AL*	30000	TXV	15	12.5
126CNA036–A	CAP**3721AL*	35400	TXV	15	12.5
126CNA042–A	CAP**4321AL*	40000	TXV	15	12.5
126CNA048–A	CAP**6024AL*	46500	TXV	15	12.5
126CNA060–A	CNPV*6124AL*	57500	TXV	15	12.5

***** AHRI = Air Conditioning, Heating & Refrigeration Institute
EER — Energy Efficiency Ratio – 'A' conditions – 80°F (26.6°C) indoor db/67°F (19.4°C) indoor wb & 95°F (35°C) outdoor wb.
SEER — Seasonal Energy Efficiency Ratio
TDR — Time–Delay Relay. In most cases, only one method should be used to achieve TDR function. Using more than one method in a system may cause degradation in performance. Use either the accessory Time–Delay Relay, KAATD0101TDR, or a furnace equipped with TDR. Most Bryant furnaces are equipped with TDR.

NOTES:
1. Ratings are net values reflecting the effects of circulating fan motor heat. Supplemental electric heat is not included.
2. Tested outdoor/indoor combinations have been tested in accordance with DOE test procedures for central air conditioners. Ratings for other combinations are determined under DOE computer simulation procedures.
3. Determine actual CFM values obtainable for your system by referring to fan performance data in fan coil or furnace coil literature.
4. Do not apply with capillary tube coils as performance and reliability are significantly affected.

DETAILED COOLING CAPACITIES#

EVAPORATOR AIR		CONDENSER ENTERING AIR TEMPERATURES °F (°C)																	
		75 (23.9)			85 (29.4)			95 (35)			105 (40.6)			115 (46.1)			125 (51.7)		
CFM	EWB	Capacity MBtuh		Total System KW**	Capacity MBtuh		Total System KW**	Capacity MBtuh		Total System KW**	Capacity MBtuh		Total System KW**	Capacity MBtuh		Total System KW**	Capacity MBtuh		Total System KW**
		Total	Sensě		Total	Sensě		Total	Sensě		Total	Sensě		Total	Sensě		Total	Sensě	
126CNA018–A Outdoor Section With CAP1917AL* Indoor Section**																			
525	72 (22.2)	22.27	10.85	1.54	20.79	10.56	1.50	19.32	10.25	1.43	17.83	9.93	1.32	16.33	9.58	1.16	14.79	9.20	0.95
	67 (19.4)	20.34	13.38	1.55	18.95	13.09	1.51	17.57	12.78	1.43	16.20	12.46	1.32	14.81	12.11	1.16	13.37	11.73	0.95
	63 (17.2)††	18.92	12.89	1.57	17.61	12.59	1.51	16.31	12.27	1.43	15.00	11.93	1.32	13.69	11.57	1.16	12.34	11.18	0.95
	62 (16.7)	18.55	15.85	1.57	17.26	15.54	1.51	15.99	15.22	1.43	14.76	14.76	1.32	13.66	13.66	1.16	12.52	12.52	0.95
	57 (13.9)	18.03	18.03	1.57	16.92	16.92	1.52	15.83	15.83	1.43	14.75	14.75	1.32	13.63	13.63	1.16	12.50	12.50	0.95
600	72 (22.2)	22.57	11.40	1.58	21.12	11.15	1.53	19.60	10.84	1.45	18.07	10.52	1.34	16.53	10.17	1.18	14.96	9.79	0.96
	67 (19.4)	20.70	14.33	1.59	19.28	14.04	1.54	17.86	13.73	1.46	16.44	13.43	1.34	15.01	13.07	1.18	13.55	12.66	0.96
	63 (17.2)††	19.30	13.79	1.60	17.95	13.47	1.54	16.60	13.15	1.46	15.25	12.83	1.34	13.90	12.45	1.18	12.52	12.06	0.96
	62 (16.7)	19.20	16.57	1.60	17.90	16.26	1.54	16.54	16.54	1.46	15.39	15.39	1.34	14.22	14.22	1.18	13.00	13.00	0.96
	57 (13.9)	18.83	18.83	1.60	17.67	17.67	1.55	16.51	16.51	1.46	15.35	15.35	1.34	14.19	14.19	1.18	12.98	12.98	0.96
650	72 (22.2)	22.76	11.79	1.60	21.29	11.53	1.55	19.74	11.23	1.47	18.18	10.90	1.35	16.62	10.55	1.19	14.98	10.16	0.97
	67 (19.4)	20.89	14.96	1.61	19.44	14.65	1.56	18.00	14.35	1.48	16.56	14.03	1.35	15.12	13.69	1.19	13.63	13.29	0.97
	63 (17.2)††	19.50	14.37	1.63	18.12	14.05	1.57	16.74	13.74	1.48	15.37	13.39	1.36	14.02	13.04	1.19	12.61	12.63	0.97
	62 (16.7)	19.39	17.54	1.62	18.11	18.11	1.57	16.93	16.93	1.48	15.73	15.73	1.36	14.52	14.52	1.19	13.27	13.27	0.97
	57 (13.9)	19.28	19.28	1.63	18.09	18.09	1.57	16.90	16.90	1.48	15.71	15.71	1.36	14.51	14.51	1.19	13.25	13.25	0.97
675	72 (22.2)	22.83	11.98	1.61	21.35	11.72	1.56	19.79	11.42	1.48	18.23	11.09	1.36	16.65	10.74	1.20	15.00	10.35	0.97
	67 (19.4)	20.97	15.25	1.63	19.51	14.96	1.57	18.07	14.66	1.48	16.62	14.34	1.36	15.14	13.98	1.19	13.67	13.59	0.97
	63 (17.2)††	19.58	14.66	1.64	18.18	14.35	1.58	16.81	14.03	1.49	15.44	13.68	1.36	14.06	13.31	1.20	12.66	12.90	0.97
	62 (16.7)	19.52	19.52	1.64	18.32	18.32	1.58	17.09	17.09	1.49	15.89	15.89	1.36	14.67	14.67	1.19	13.39	13.39	0.97
	57 (13.9)	19.49	19.49	1.64	18.28	18.28	1.58	17.07	17.07	1.49	15.87	15.87	1.36	14.63	14.63	1.19	13.38	13.38	0.97
126CNA024–A Outdoor Section With CNPV*3117AL* Indoor Section																			
700	72 (22.2)	28.93	14.61	1.42	27.55	14.08	1.64	26.10	13.53	1.90	24.56	12.96	2.19	22.91	12.36	2.54	21.16	11.74	2.93
	67 (19.4)	26.39	18.01	1.43	25.13	17.46	1.65	23.80	16.89	1.90	22.39	16.29	2.20	20.88	15.66	2.54	19.28	15.01	2.94
	63 (17.2)††	24.54	17.34	1.44	23.36	16.79	1.65	22.11	16.22	1.91	20.80	15.62	2.21	19.39	15.00	2.55	17.89	14.34	2.95
	62 (16.7)	24.16	21.36	1.44	23.02	20.78	1.65	21.84	20.17	1.91	20.66	20.66	2.21	19.50	19.50	2.55	18.25	18.25	2.94
	57 (13.9)	23.62	23.62	1.44	22.68	22.68	1.66	21.69	21.69	1.91	20.62	20.62	2.21	19.47	19.47	2.55	18.23	18.23	2.94
800	72 (22.2)	29.39	15.38	1.45	27.97	14.85	1.68	26.46	14.29	1.93	24.86	13.71	2.23	23.16	13.10	2.58	21.35	12.46	2.97
	67 (19.4)	26.86	19.26	1.46	25.55	18.69	1.68	24.17	18.11	1.94	22.71	17.49	2.24	21.15	16.85	2.58	19.51	16.18	2.98
	63 (17.2)††	25.00	18.51	1.47	23.77	17.94	1.69	22.49	17.35	1.95	21.12	16.74	2.24	19.67	16.10	2.59	18.13	15.42	2.99
	62 (16.7)	24.76	23.03	1.47	23.71	23.52	1.69	22.58	22.58	1.95	21.44	21.44	2.24	20.21	20.21	2.59	18.88	18.88	2.98
	57 (13.9)	24.62	24.62	1.47	23.61	23.61	1.69	22.55	22.55	1.95	21.41	21.41	2.24	20.18	20.18	2.59	18.85	18.85	2.98
900	72 (22.2)	29.73	16.13	1.49	28.26	15.58	1.71	26.71	15.02	1.97	25.07	14.42	2.27	23.32	13.81	2.62	21.47	13.16	3.02
	67 (19.4)	27.20	20.47	1.50	25.86	19.89	1.72	24.44	19.29	1.98	22.94	18.66	2.28	21.36	17.99	2.62	19.68	17.30	3.02
	63 (17.2)††	25.35	19.63	1.50	24.09	19.05	1.73	22.76	18.45	1.98	21.36	17.82	2.28	19.88	17.15	2.63	18.31	16.45	3.03
	62 (16.7)	25.48	25.48	1.50	24.41	24.41	1.72	23.28	23.28	1.98	22.08	22.08	2.28	20.77	20.77	2.63	19.37	19.37	3.02
	57 (13.9)	25.44	25.44	1.50	24.38	24.38	1.72	23.25	23.25	1.98	22.05	22.05	2.28	20.75	20.75	2.63	19.35	19.35	3.02

See notes on pg. 15

DETAILED COOLING CAPACITIES# (CONT.)

EVAPORATOR AIR		CONDENSER ENTERING AIR TEMPERATURES °F (°C)																	
		75 (23.9)			85 (29.4)			95 (35)			105 (40.6)			115 (46.1)			125 (51.7)		
CFM	EWB	Capacity MBtuh		Total System KW**	Capacity MBtuh		Total System KW**	Capacity MBtuh		Total System KW**	Capacity MBtuh		Total System KW**	Capacity MBtuh		Total System KW**	Capacity MBtuh		Total System KW**
		Total	Sensě		Total	Sensě		Total	Sensě		Total	Sensě		Total	Sensě		Total	Sensě	
126CNA030–A Outdoor Section With CAP3721AL* Indoor Section**																			
875	72 (22.2)	36.13	18.35	1.55	34.54	17.78	1.70	32.75	17.15	1.87	30.82	16.48	2.06	28.81	15.79	2.28	26.75	15.09	2.53
	67 (19.4)	32.51	22.48	1.54	31.10	21.93	1.69	29.48	21.30	1.86	27.73	20.62	2.06	25.90	19.92	2.28	24.03	19.22	2.53
	63 (17.2)††	29.97	21.53	1.54	28.70	20.99	1.69	27.21	20.37	1.86	25.58	19.69	2.06	23.87	18.99	2.28	22.12	18.28	2.54
	62 (16.7)	29.39	26.53	1.54	28.17	25.97	1.69	26.76	26.57	1.86	25.40	25.40	2.06	24.04	24.04	2.28	22.62	22.62	2.54
	57 (13.9)	28.72	28.72	1.54	27.76	27.76	1.69	26.62	26.62	1.86	25.35	25.35	2.06	24.00	24.00	2.28	22.58	22.58	2.54
1000	72 (22.2)	36.85	19.40	1.59	35.19	18.82	1.74	33.31	18.17	1.91	31.29	17.49	2.10	29.20	16.79	2.32	27.06	16.08	2.57
	67 (19.4)	33.17	24.12	1.58	31.69	23.55	1.73	30.00	22.90	1.90	28.19	22.22	2.10	26.29	21.50	2.32	24.36	20.78	2.57
	63 (17.2)††	30.60	23.05	1.58	29.26	22.50	1.73	27.70	21.86	1.90	26.00	21.16	2.10	24.24	20.45	2.32	22.44	19.72	2.58
	62 (16.7)	30.27	28.45	1.58	29.07	29.07	1.73	27.83	27.83	1.90	26.46	26.46	2.10	25.01	25.01	2.32	23.50	23.50	2.57
	57 (13.9)	30.07	30.07	1.58	29.03	29.03	1.73	27.78	27.78	1.90	26.42	26.42	2.10	24.97	24.97	2.32	23.47	23.47	2.57
1125	72 (22.2)	37.39	20.42	1.63	35.65	19.83	1.78	33.71	19.17	1.95	31.63	18.48	2.14	29.46	17.77	2.36	27.27	17.05	2.61
	67 (19.4)	33.69	25.71	1.63	32.15	25.13	1.78	30.40	24.47	1.94	28.53	23.76	2.14	26.59	23.03	2.36	24.62	22.27	2.61
	63 (17.2)††	31.08	24.53	1.62	29.68	23.96	1.77	28.07	23.30	1.94	26.33	22.59	2.14	24.53	21.85	2.36	22.71	21.07	2.62
	62 (16.7)	31.28	31.28	1.62	30.14	30.14	1.77	28.81	28.81	1.94	27.36	27.36	2.14	25.82	25.82	2.36	24.23	24.23	2.61
	57 (13.9)	31.23	31.23	1.62	30.09	30.09	1.77	28.77	28.77	1.94	27.32	27.32	2.14	25.79	25.79	2.36	24.20	24.20	2.61
126CNA036–A Outdoor Section With CAP3721AL* Indoor Section**																			
1050	72 (22.2)	42.48	21.73	2.26	40.52	21.02	2.52	38.36	20.26	2.78	36.04	19.45	3.07	33.61	18.62	3.41	31.08	17.76	3.83
	67 (19.4)	38.58	26.77	2.26	36.81	26.07	2.52	34.84	25.30	2.77	32.74	24.48	3.05	30.52	23.63	3.38	28.21	22.75	3.79
	63 (17.2)††	35.76	25.72	2.26	34.13	25.03	2.52	32.32	24.26	2.77	30.36	23.44	3.04	28.28	22.58	3.37	26.14	21.71	3.78
	62 (16.7)	35.14	31.67	2.27	33.58	30.96	2.52	31.86	30.12	2.77	30.24	30.00	3.04	28.49	28.49	3.37	26.73	26.73	3.78
	57 (13.9)	34.34	34.34	2.27	33.07	33.07	2.52	31.67	31.67	2.77	30.11	30.11	3.04	28.45	28.45	3.37	26.69	26.69	3.78
1200	72 (22.2)	43.19	22.93	2.32	41.15	22.22	2.59	38.89	21.44	2.85	36.49	20.62	3.14	33.98	19.77	3.48	31.36	18.90	3.89
	67 (19.4)	39.29	28.67	2.32	37.44	27.95	2.58	35.40	27.17	2.83	33.21	26.33	3.11	30.93	25.46	3.45	28.54	24.56	3.86
	63 (17.2)††	36.45	27.49	2.32	34.75	26.78	2.58	32.86	26.00	2.83	30.82	25.15	3.10	28.68	24.28	3.43	26.47	23.37	3.84
	62 (16.7)	36.03	35.71	2.32	34.55	34.55	2.58	33.01	33.01	2.83	31.35	31.35	3.11	29.56	29.56	3.44	27.67	27.67	3.85
	57 (13.9)	35.86	35.86	2.32	34.50	34.50	2.58	32.97	32.97	2.83	31.30	31.30	3.10	29.52	29.52	3.44	27.63	27.63	3.85
1350	72 (22.2)	43.72	24.08	2.38	41.60	23.35	2.65	39.27	22.57	2.91	36.80	21.74	3.20	34.22	20.88	3.54	31.54	20.00	3.96
	67 (19.4)	39.83	30.51	2.38	37.92	29.78	2.64	35.81	28.98	2.89	33.57	28.12	3.18	31.23	27.22	3.51	28.81	26.27	3.92
	63 (17.2)††	36.98	29.20	2.38	35.21	28.47	2.63	33.25	27.67	2.89	31.18	26.81	3.16	28.99	25.90	3.49	26.76	24.93	3.90
	62 (16.7)	37.20	37.20	2.38	35.74	35.74	2.63	34.10	34.10	2.89	32.33	32.33	3.17	30.43	30.43	3.50	28.43	28.43	3.92
	57 (13.9)	37.15	37.15	2.38	35.69	35.69	2.63	34.05	34.05	2.89	32.29	32.29	3.17	30.39	30.39	3.50	28.40	28.40	3.92

See notes on pg. 15

DETAILED COOLING CAPACITIES# (CONT.)

EVAPORATOR AIR		CONDENSER ENTERING AIR TEMPERATURES °F (°C)																	
		75 (23.9)			85 (29.4)			95 (35)			105 (40.6)			115 (46.1)			125 (51.7)		
CFM	EWB	Capacity MBtuh		Total System KW**	Capacity MBtuh		Total System KW**	Capacity MBtuh		Total System KW**	Capacity MBtuh		Total System KW**	Capacity MBtuh		Total System KW**	Capacity MBtuh		Total System KW**
		Total	Sensě		Total	Sensě		Total	Sensě		Total	Sensě		Total	Sensě		Total	Sensě	
126CNA042–A Outdoor Section With CAP4321AL* Indoor Section**																			
1250	72 (22.2)	48.66	25.64	2.64	46.39	24.82	2.91	44.00	23.96	3.21	41.46	23.05	3.55	38.72	22.09	3.93	35.81	21.07	4.35
	67 (19.4)	44.17	31.65	2.63	42.15	30.84	2.90	40.00	29.98	3.20	37.72	29.08	3.54	35.27	28.12	3.92	32.63	27.09	4.34
	63 (17.2)††	40.95	30.40	2.62	39.10	29.59	2.89	37.12	28.74	3.19	35.02	27.85	3.53	32.75	26.89	3.90	30.33	25.88	4.33
	62 (16.7)	40.32	37.53	2.62	38.56	36.68	2.89	36.72	36.56	3.19	34.96	34.96	3.53	33.11	33.11	3.91	31.08	31.08	4.33
	57 (13.9)	39.60	39.60	2.62	38.15	38.15	2.89	36.60	36.60	3.19	34.91	34.91	3.53	33.06	33.06	3.91	31.04	31.04	4.33
1400	72 (22.2)	49.34	26.82	2.69	46.99	25.98	2.97	44.51	25.11	3.27	41.87	24.18	3.61	39.06	23.21	3.99	36.06	22.19	4.41
	67 (19.4)	44.84	33.54	2.69	42.74	32.71	2.96	40.52	31.84	3.26	38.16	30.91	3.60	35.64	29.93	3.98	32.94	28.88	4.40
	63 (17.2)††	41.60	32.15	2.68	39.67	31.33	2.95	37.63	30.46	3.25	35.45	29.54	3.59	33.12	28.57	3.96	30.64	27.52	4.38
	62 (16.7)	41.21	40.90	2.68	39.56	39.56	2.95	37.89	37.89	3.25	36.09	36.09	3.59	34.12	34.12	3.97	31.96	31.96	4.39
	57 (13.9)	41.05	41.05	2.68	39.50	39.50	2.95	37.84	37.84	3.25	36.04	36.04	3.59	34.07	34.07	3.97	31.92	31.92	4.39
1575	72 (22.2)	49.93	28.15	2.76	47.50	27.29	3.03	44.93	26.40	3.34	42.22	25.47	3.68	39.32	24.49	4.06	36.24	23.45	4.48
	67 (19.4)	45.43	35.67	2.76	43.27	34.82	3.02	40.97	33.92	3.33	38.54	32.97	3.67	35.96	31.95	4.05	33.21	30.84	4.47
	63 (17.2)††	42.17	34.12	2.75	40.18	33.28	3.02	38.07	32.38	3.32	35.83	31.44	3.66	33.45	30.42	4.03	30.92	29.29	4.45
	62 (16.7)	42.50	42.50	2.75	40.83	40.83	3.02	39.05	39.05	3.32	37.14	37.14	3.66	35.04	35.04	4.04	32.76	32.76	4.46
	57 (13.9)	42.44	42.44	2.75	40.78	40.78	3.02	39.00	39.00	3.32	37.09	37.09	3.66	35.00	35.00	4.04	32.73	32.73	4.46
126CNA048–A Outdoor Section With CAP6024AL* Indoor Section**																			
1400	72 (22.2)	56.20	29.09	3.05	53.85	28.22	3.36	51.38	27.33	3.73	48.74	26.38	4.16	45.94	25.38	4.64	42.88	24.31	5.18
	67 (19.4)	50.90	35.67	3.05	48.75	34.80	3.36	46.50	33.90	3.72	44.10	32.95	4.14	41.51	31.93	4.62	38.72	30.84	5.16
	63 (17.2)††	47.13	34.26	3.05	45.13	33.39	3.35	43.04	32.48	3.71	40.79	31.53	4.13	38.38	30.50	4.60	35.77	29.40	5.14
	62 (16.7)	46.48	42.17	3.05	44.57	41.27	3.35	42.59	40.29	3.71	40.55	40.32	4.13	38.55	38.55	4.61	36.41	36.41	5.15
	57 (13.9)	45.42	45.42	3.05	43.87	43.87	3.35	42.22	42.22	3.71	40.44	40.44	4.13	38.50	38.50	4.60	36.36	36.36	5.14
1600	72 (22.2)	57.23	30.59	3.13	54.78	29.71	3.44	52.19	28.79	3.81	49.45	27.83	4.24	46.55	26.82	4.72	43.37	25.73	5.26
	67 (19.4)	51.84	38.05	3.13	49.61	37.17	3.44	47.27	36.25	3.80	44.77	35.27	4.22	42.11	34.23	4.70	39.22	33.10	5.24
	63 (17.2)††	48.01	36.47	3.13	45.94	35.58	3.43	43.76	34.65	3.79	41.43	33.67	4.21	38.94	32.62	4.69	36.25	31.48	5.22
	62 (16.7)	47.64	45.26	3.13	45.75	45.53	3.43	43.94	43.94	3.79	42.04	42.04	4.21	39.97	39.97	4.69	37.69	37.69	5.23
	57 (13.9)	47.32	47.32	3.13	45.66	45.66	3.43	43.88	43.88	3.79	41.98	41.98	4.21	39.91	39.91	4.69	37.64	37.64	5.23
1800	72 (22.2)	58.00	32.01	3.21	55.45	31.12	3.52	52.79	30.19	3.89	49.97	29.21	4.32	46.96	28.18	4.80	43.72	27.08	5.34
	67 (19.4)	52.57	40.33	3.21	50.26	39.42	3.52	47.84	38.48	3.88	45.29	37.48	4.30	42.56	36.40	4.78	39.63	35.23	5.32
	63 (17.2)††	48.70	38.57	3.20	46.55	37.66	3.51	44.31	36.71	3.87	41.92	35.70	4.29	39.37	34.61	4.77	36.65	33.42	5.30
	62 (16.7)	48.95	48.95	3.20	47.18	47.18	3.51	45.31	45.31	3.87	43.29	43.29	4.29	41.10	41.10	4.77	38.71	38.71	5.32
	57 (13.9)	48.88	48.88	3.20	47.12	47.12	3.51	45.25	45.25	3.87	43.24	43.24	4.29	41.05	41.05	4.77	38.67	38.67	5.32

See notes on pg. 15

DETAILED COOLING CAPACITIES# (CONT.)

EVAPORATOR AIR		CONDENSER ENTERING AIR TEMPERATURES °F (°C)																	
		75 (23.9)			85 (29.4)			95 (35)			105 (40.6)			115 (46.1)			125 (51.7)		
CFM	EWB	Capacity MBtuh		Total System KW**	Capacity MBtuh		Total System KW**	Capacity MBtuh		Total System KW**	Capacity MBtuh		Total System KW**	Capacity MBtuh		Total System KW**	Capacity MBtuh		Total System KW**
		Total	Sensě		Total	Sensě		Total	Sensě		Total	Sensě		Total	Sensě		Total	Sensě	
126CNA060–A Outdoor Section With CNPV*6124AL* Indoor Section																			
1750	72 (22.2)	69.41	35.30	3.77	66.47	34.21	4.17	63.36	33.10	4.63	60.02	31.93	5.15	56.46	30.70	5.76	52.66	29.39	6.45
	67 (19.4)	63.02	43.41	3.75	60.34	42.33	4.15	57.50	41.22	4.60	54.45	40.04	5.13	51.20	38.80	5.72	47.71	37.46	6.42
	63 (17.2)††	58.37	41.67	3.74	55.88	40.61	4.13	53.24	39.50	4.58	50.41	38.32	5.10	47.36	37.06	5.70	44.07	35.71	6.39
	62 (16.7)	57.68	51.43	3.74	55.30	50.33	4.13	52.81	49.15	4.58	50.24	50.24	5.10	47.81	47.81	5.70	45.09	45.09	6.40
	57 (13.9)	56.54	56.54	3.73	54.57	54.57	4.13	52.40	52.40	4.59	50.18	50.18	5.10	47.73	47.73	5.70	45.02	45.02	6.40
2000	72 (22.2)	78.97	2.98	3.89	67.52	36.04	4.27	64.30	34.89	4.72	60.86	33.72	5.24	57.19	32.45	5.85	53.28	31.15	6.54
	67 (19.4)	64.15	46.32	3.85	61.36	45.22	4.25	58.41	44.09	4.70	55.29	42.91	5.21	51.92	41.63	5.82	48.32	40.24	6.51
	63 (17.2)††	59.46	44.38	3.83	56.87	43.29	4.23	54.14	42.17	4.67	51.21	40.96	5.19	48.03	39.65	5.80	44.66	38.26	6.49
	62 (16.7)	59.15	55.19	3.83	56.80	56.80	4.23	54.57	54.57	4.68	52.13	52.13	5.21	49.49	49.49	5.81	46.62	46.62	6.50
	57 (13.9)	58.84	58.84	3.83	56.75	56.75	4.23	54.53	54.53	4.67	52.09	52.09	5.20	49.44	49.44	5.80	46.57	46.57	6.50
2250	72 (22.2)	71.50	38.79	3.97	68.29	37.70	4.36	64.90	36.58	4.82	61.37	35.37	5.35	57.60	34.14	5.95	53.54	32.75	6.65
	67 (19.4)	65.00	49.13	3.94	62.17	48.03	4.34	59.11	46.82	4.80	56.25	45.82	5.32	52.43	44.26	5.92	48.83	42.87	6.61
	63 (17.2)††	60.27	46.94	3.93	57.60	45.84	4.32	57.65	34.72	4.77	51.74	43.45	5.30	48.56	42.08	5.90	45.14	40.64	6.59
	62 (16.7)	60.83	60.83	3.93	58.62	58.62	4.33	56.22	56.22	4.78	53.66	53.66	5.30	50.89	50.89	5.90	47.86	47.86	6.61
	57 (13.9)	60.76	60.76	3.93	58.53	58.53	4.33	56.15	56.15	4.78	53.59	53.59	5.30	50.82	50.82	5.91	47.81	47.81	6.60

† Total and sensible capacities are net capacities. Blower motor heat has been subtracted.
‡ Sensible capacities shown are based on 80°F (27°C) entering air at the indoor coil. For sensible capacities at other than 80°F (27°C), deduct 835 Btuh (245 kW) per 1000 CFM (480 L/S) of indoor coil air for each degree below 80°F (27°C), or add 835 Btuh (245 kW) per 1000 CFM (480 L/S) of indoor coil air per degree above 80°F (27°C).
# Detailed cooling capacities are based on indoor and outdoor unit at the same elevation per AHRI standard 210/240–2008. If additional tubing length and/or indoor unit is located above outdoor unit, a slight variation in capacity may occur.
** System kw is total of indoor and outdoor unit kilowatts.
†† At TVA rating indoor condition (75°F edb/63°F ewb). All other indoor air temperatures are at 80°F edb.
NOTE: When the required data falls between the published data, interpolation may be performed. Extrapolation is not an acceptable practice.
EWB — Entering Wet Bulb

CONDENSER ONLY RATINGS

SST °F (°C)		CONDENSER ENTERING AIR TEMPERATURES °F (°C)							
		55 (12.78)	65 (18.33)	75 (23.89)	85 (29.44)	95 (35.0)	105 (40.56)	115 (46.11)	125 (51.67)
126CNA018 – A									
30 (–1.1)	TCG	15.80	14.70	13.70	12.70	11.80	10.80	9.90	8.90
	SDT	66.60	76.00	85.40	94.90	104.40	113.80	123.30	132.80
	KW	0.80	0.89	1.00	1.11	1.25	1.41	1.59	1.80
35 (1.7)	TCG	17.50	16.30	15.20	14.20	13.10	12.10	11.10	10.00
	SDT	67.60	77.00	86.40	95.80	105.20	114.60	124.00	133.40
	KW	0.79	0.88	0.99	1.11	1.25	1.41	1.59	1.80
40 (4.4)	TCG	19.20	18.00	16.90	15.70	14.60	13.50	12.30	11.20
	SDT	68.60	78.00	87.40	96.80	106.10	115.50	124.80	134.10
	KW	0.78	0.87	0.98	1.11	1.24	1.40	1.59	1.79
45 (7.2)	TCG	21.10	19.80	18.60	17.40	16.10	14.90	13.70	12.40
	SDT	69.70	79.00	88.40	97.70	107.10	116.30	125.60	134.90
	KW	0.76	0.86	0.97	1.10	1.24	1.40	1.58	1.79
50 (10)	TCG	23.00	21.70	20.40	19.10	17.70	16.40	15.00	13.70
	SDT	70.80	80.10	89.40	98.70	108.00	117.30	126.50	135.70
	KW	0.75	0.85	0.97	1.10	1.24	1.40	1.58	1.79
55 (12.8)	TCG	25.00	23.60	22.20	20.80	19.40	18.00	16.50	15.00
	SDT	71.90	81.20	90.50	99.80	109.00	118.20	127.40	136.50
	KW	0.73	0.84	0.96	1.09	1.24	1.40	1.59	1.79
126CNA024 – A									
30 (–1.1)	TCG	21.50	20.30	19.10	18.00	16.70	15.50	14.20	12.80
	SDT	67.20	76.70	86.20	95.70	105.20	114.70	124.10	133.50
	KW	1.01	1.14	1.29	1.46	1.65	1.88	2.13	2.41
35 (1.7)	TCG	23.80	22.50	21.20	19.90	18.60	17.20	15.80	14.20
	SDT	68.20	77.70	87.20	96.70	106.10	115.50	124.80	134.20
	KW	1.01	1.14	1.29	1.46	1.65	1.88	2.13	2.42
40 (4.4)	TCG	26.20	24.80	23.40	22.00	20.50	19.00	17.40	15.80
	SDT	69.40	78.80	88.20	97.60	107.00	116.40	125.70	134.90
	KW	1.00	1.13	1.28	1.46	1.65	1.88	2.13	2.42
45 (7.2)	TCG	28.80	27.30	25.80	24.20	22.60	21.00	19.20	17.40
	SDT	70.50	79.90	89.30	98.70	108.00	117.30	126.50	135.70
	KW	0.99	1.13	1.28	1.45	1.65	1.88	2.13	2.42
50 (10)	TCG	31.50	29.90	28.20	26.60	24.80	23.00	21.10	19.10
	SDT	71.80	81.10	90.40	99.70	109.00	118.20	127.40	136.50
	KW	0.98	1.12	1.27	1.45	1.65	1.87	2.13	2.41
55 (12.8)	TCG	34.40	32.70	30.80	29.00	27.10	25.10	23.00	20.90
	SDT	73.00	82.30	91.60	100.90	110.10	119.20	128.30	137.30
	KW	0.98	1.11	1.27	1.44	1.64	1.87	2.13	2.41
126CNA030 – A									
30 (–1.1)	TCG	23.40	23.30	22.70	21.50	20.10	18.50	16.90	15.30
	SDT	65.20	75.30	85.20	94.80	104.40	113.80	123.30	132.70
	KW	1.27	1.44	1.62	1.81	2.03	2.28	2.57	2.90
35 (1.7)	TCG	26.20	26.00	25.20	23.90	22.30	20.60	18.80	17.10
	SDT	66.30	76.40	86.10	95.70	105.20	114.60	124.00	133.40
	KW	1.27	1.44	1.62	1.81	2.03	2.28	2.57	2.90
40 (4.4)	TCG	29.40	29.00	27.90	26.40	24.70	22.90	21.00	19.10
	SDT	67.50	77.50	87.20	96.70	106.20	115.50	124.90	134.20
	KW	1.27	1.44	1.61	1.81	2.03	2.28	2.57	2.90
45 (7.2)	TCG	32.90	32.20	30.90	29.20	27.40	25.30	23.30	21.20
	SDT	68.90	78.70	88.30	97.80	107.20	116.50	125.80	135.00
	KW	1.28	1.44	1.62	1.81	2.03	2.28	2.57	2.90
50 (10)	TCG	36.60	35.70	34.20	32.30	30.20	28.00	25.80	23.50
	SDT	70.30	80.10	89.60	99.00	108.30	117.50	126.70	135.90
	KW	1.28	1.45	1.62	1.81	2.03	2.28	2.57	2.90
55 (12.8)	TCG	40.70	39.50	37.70	35.60	33.30	30.90	28.50	26.10
	SDT	71.90	81.60	91.00	100.30	109.50	118.60	127.80	136.90
	KW	1.30	1.46	1.63	1.82	2.04	2.29	2.57	2.90

See notes on page 18

CONDENSER ONLY RATINGS CONTINUED

SST °F (°C)		CONDENSER ENTERING AIR TEMPERATURES °F (°C)							
		55 (12.78)	65 (18.33)	75 (23.89)	85 (29.44)	95 (35.0)	105 (40.56)	115 (46.11)	125 (51.67)
126CNA036 – A									
30 (–1.1)	TCG	30.10	29.20	27.90	26.30	24.40	22.50	20.40	18.40
	SDT	65.80	75.60	85.30	94.90	104.30	113.80	123.20	132.60
	KW	1.32	1.66	1.93	2.18	2.41	2.68	3.00	3.41
35 (1.7)	TCG	33.40	32.40	30.90	29.10	27.10	25.00	22.80	20.60
	SDT	66.90	76.60	86.30	95.70	105.20	114.60	123.90	133.30
	KW	1.29	1.64	1.92	2.16	2.40	2.67	2.99	3.40
40 (4.4)	TCG	37.00	35.70	34.10	32.10	30.00	27.70	25.30	23.00
	SDT	68.00	77.70	87.30	96.70	106.10	115.40	124.70	134.00
	KW	1.27	1.62	1.90	2.15	2.39	2.67	2.99	3.40
45 (7.2)	TCG	40.80	39.30	37.50	35.30	33.00	30.50	28.00	25.50
	SDT	69.20	78.80	88.30	97.70	107.00	116.30	125.60	134.80
	KW	1.26	1.61	1.89	2.14	2.39	2.67	3.00	3.41
50 (10)	TCG	44.80	43.10	41.10	38.70	36.20	33.50	30.80	28.10
	SDT	70.50	80.00	89.50	98.80	108.00	117.20	126.40	135.60
	KW	1.25	1.60	1.88	2.14	2.39	2.67	3.01	3.42
55 (12.8)	TCG	49.10	47.20	44.90	42.30	39.60	36.70	33.80	30.90
	SDT	71.90	81.30	90.70	99.90	109.10	118.20	127.40	136.50
	KW	1.25	1.60	1.89	2.14	2.40	2.69	3.02	3.44
126CNA042 – A									
30 (–1.1)	TCG	35.40	33.70	32.00	30.20	28.30	26.30	24.20	22.00
	SDT	68.90	78.40	87.80	97.30	106.70	116.00	125.40	134.60
	KW	1.69	1.90	2.14	2.39	2.68	3.01	3.37	3.77
35 (1.7)	TCG	39.00	37.10	35.20	33.20	31.20	29.00	26.70	24.30
	SDT	70.10	79.60	89.00	98.30	107.70	117.00	126.20	135.40
	KW	1.70	1.91	2.15	2.41	2.70	3.02	3.39	3.80
40 (4.4)	TCG	43.00	40.90	38.70	36.50	34.30	31.90	29.40	26.70
	SDT	71.50	80.80	90.20	99.50	108.80	118.00	127.20	136.30
	KW	1.71	1.92	2.16	2.42	2.71	3.04	3.41	3.82
45 (7.2)	TCG	47.20	44.90	42.50	40.10	37.60	35.00	32.20	29.30
	SDT	72.90	82.20	91.50	100.70	109.90	119.00	128.10	137.20
	KW	1.72	1.93	2.17	2.43	2.73	3.06	3.43	3.84
50 (10)	TCG	51.80	49.20	46.60	43.90	41.10	38.20	35.20	32.00
	SDT	74.50	83.70	92.80	102.00	111.10	120.20	129.20	138.10
	KW	1.73	1.94	2.18	2.44	2.74	3.08	3.45	3.86
55 (12.8)	TCG	56.70	53.80	50.90	48.00	44.90	41.70	38.40	34.90
	SDT	76.20	85.20	94.30	103.40	112.40	121.40	130.30	139.10
	KW	1.74	1.95	2.19	2.46	2.76	3.09	3.46	3.88
126CNA048 – A									
30 (–1.1)	TCG	40.60	38.50	36.50	34.40	32.30	30.10	27.70	25.20
	SDT	67.80	77.30	86.90	96.50	106.10	115.70	125.20	134.80
	KW	2.30	2.52	2.79	3.12	3.50	3.94	4.45	5.02
35 (1.7)	TCG	44.70	42.50	40.20	38.00	35.70	33.30	30.70	28.00
	SDT	68.90	78.40	87.90	97.50	107.00	116.60	126.10	135.60
	KW	2.30	2.53	2.80	3.13	3.51	3.96	4.47	5.05
40 (4.4)	TCG	49.20	46.70	44.30	41.80	39.30	36.70	34.00	31.00
	SDT	70.10	79.60	89.10	98.60	108.00	117.50	127.00	136.40
	KW	2.30	2.53	2.81	3.14	3.53	3.98	4.50	5.08
45 (7.2)	TCG	53.90	51.30	48.60	46.00	43.30	40.40	37.40	34.30
	SDT	71.50	80.80	90.30	99.70	109.10	118.60	128.00	137.30
	KW	2.30	2.53	2.81	3.15	3.54	4.00	4.52	5.10
50 (10)	TCG	59.10	56.20	53.40	50.50	47.50	44.40	41.20	37.80
	SDT	72.90	82.20	91.60	100.90	110.30	119.70	129.00	138.30
	KW	2.29	2.53	2.82	3.16	3.56	4.02	4.55	5.13
55 (12.8)	TCG	64.70	61.60	58.50	55.30	52.10	48.70	45.30	41.60
	SDT	74.40	83.70	93.00	102.30	111.60	120.90	130.10	139.30
	KW	2.28	2.53	2.82	3.17	3.57	4.04	4.57	5.16

See notes on page 18

CONDENSER ONLY RATINGS CONTINUED

SST °F (°C)		CONDENSER ENTERING AIR TEMPERATURES °F (°C)							
		55 (12.78)	65 (18.33)	75 (23.89)	85 (29.44)	95 (35.0)	105 (40.56)	115 (46.11)	125 (51.67)
126CNA060 – A									
30 (–1.1)	TCG	52.20	49.60	47.00	44.30	41.50	38.60	35.40	32.10
	SDT	70.60	80.00	89.60	99.20	108.80	118.50	128.20	137.80
	KW	2.68	3.02	3.39	3.81	4.29	4.84	5.48	6.20
35 (1.7)	TCG	57.50	54.70	51.80	49.00	45.90	42.70	39.30	35.80
	SDT	71.90	81.30	90.90	100.30	109.90	119.50	129.20	138.80
	KW	2.71	3.04	3.42	3.84	4.32	4.87	5.52	6.24
40 (4.4)	TCG	63.20	60.10	57.00	53.90	50.60	47.10	43.50	39.70
	SDT	73.40	82.70	92.10	101.60	111.20	120.70	130.20	139.80
	KW	2.74	3.07	3.44	3.87	4.36	4.92	5.55	6.28
45 (7.2)	TCG	69.40	66.00	62.60	59.20	55.60	51.90	47.90	43.90
	SDT	75.00	84.10	93.50	102.90	112.40	121.80	131.40	140.90
	KW	2.76	3.09	3.47	3.90	4.39	4.95	5.61	6.33
50 (10)	TCG	75.90	72.30	68.50	64.80	60.90	56.90	52.70	48.30
	SDT	76.60	85.70	95.10	104.40	113.70	123.10	132.60	141.90
	KW	2.78	3.12	3.50	3.93	4.42	4.99	5.65	6.38
55 (12.8)	TCG	82.90	79.00	75.00	70.90	66.70	62.30	57.80	53.10
	SDT	78.40	87.30	96.40	105.70	115.10	124.40	133.70	143.00
	KW	2.80	3.15	3.52	3.96	4.46	5.02	5.68	6.42

* AHRI listing applies only to systems shown in Combination Ratings table.

KW – Outdoor Unit Kilowatts Only.

SDT – Saturated Temperature Leaving Compressor (°F)

SST – Saturated Temperature Entering Compressor (°F/°C)

TCG – Gross Cooling Capacity (1000 Btuh)

GUIDE SPECIFICATIONS
GENERAL

System Description

Outdoor-mounted, air-cooled, split-system air conditioner unit suitable for ground or rooftop installation. Unit consists of a hermetic compressor, an air-cooled coil, propeller-type condenser fan, and a control box. Unit will discharge supply air upward as shown on contract drawings. Unit will be used in a refrigeration circuit to match up to a packaged fan coil or coil unit.

Quality Assurance

- Unit will be rated in accordance with the latest edition of AHRI Standard 210.
- Unit will be certified for capacity and efficiency, and listed in the latest AHRI directory.
- Unit construction will comply with latest edition of ANSI/ ASHRAE and with NEC.
- Unit will be constructed in accordance with UL standards and will carry the UL label of approval. Unit will have c-UL-us approval.
- Unit cabinet will be capable of withstanding Federal Test Method Standard No. 141 (Method 6061) 500-hr salt spray test.
- Air-cooled condenser coils will be leak tested at 150 psig and pressure tested at 450 psig.
- Unit constructed in ISO9001 approved facility.

Delivery, Storage, and Handling

- Unit will be shipped as single package only and is stored and handled per unit manufacturer's recommendations.

Warranty (for inclusion by specifying engineer)

- U.S. and Canada only.

PRODUCTS

Equipment

Factory assembled, single piece, air-cooled air conditioner unit. Contained within the unit enclosure is all factory wiring, piping, controls, compressor, refrigerant charge Puron® (R-410A), and special features required prior to field start-up.

Unit Cabinet

- Unit cabinet will be constructed of galvanized steel, bonderized, and coated with a powder coat paint.

Fans

- Condenser fan will be direct-drive propeller type, discharging air upward.
- Condenser fan motors will be totally enclosed, 1-phase type with class B insulation and permanently lubricated bearings. Shafts will be corrosion resistant.
- Fan blades will be statically and dynamically balanced.
- Condenser fan openings will be equipped with coated steel wire safety guards.

Compressor

- Compressor will be hermetically sealed.
- Compressor will be mounted on rubber vibration isolators.

Condenser Coil

- Condenser coil will be air cooled.
- Coil will be constructed of aluminum fins mechanically bonded to copper tubes which are then cleaned, dehydrated, and sealed.

Refrigeration Components

- Refrigeration circuit components will include liquid-line shutoff valve with sweat connections, vapor-line shutoff valve with sweat connections, system charge of Puron® (R-410A) refrigerant, and compressor oil.
- Unit will be equipped with high-pressure switch, low pressure switch and filter drier for Puron refrigerant.

Operating Characteristics

- The capacity of the unit will meet or exceed _____ Btuh at a suction temperature of _____ °F/°C. The power consumption at full load will not exceed _____ kW.
- Combination of the unit and the evaporator or fan coil unit will have a total net cooling capacity of _____ Btuh or greater at conditions of _____ CFM entering air temperature at the evaporator at _____ °F/°C wet bulb and _____ °F/°C dry bulb, and air entering the unit at _____ °F/°C.
- The system will have a SEER of _____ Btuh/watt or greater at DOE conditions.

Electrical Requirements

- Nominal unit electrical characteristics will be _____ v, single phase, 60 hz. The unit will be capable of satisfactory operation within voltage limits of _____ v to _____ v.
- Unit electrical power will be single point connection.
- Control circuit will be 24v.

Special Features

- Refer to section of this literature identifying accessories and descriptions for specific features and available enhancements.

SYSTEM DESIGN SUMMARY

1. Intended for outdoor installation with free air inlet and outlet. Outdoor fan external static pressure available is less than 0.01-in. wc.
2. Minimum outdoor operating air temperature for cooling mode without low-ambient operation accessory is 55°F (12.8°C).
3. Maximum outdoor operating air temperature is 125.6°F (51.7°C).
4. For reliable operation, unit should be level in all horizontal planes.
5. For interconnecting refrigerant tube lengths greater than 80 ft (23.4 m) and/or 35 ft (10.7 m) vertical differential, consult Residential Piping and Longline Guideline and Service Manual available from equipment distributor.
6. If any refrigerant tubing is buried, provide a 6 in. (152.4 mm) vertical rise to the valve connections at the unit. Refrigerant tubing lengths up to 36 in. (914.4 mm) may be buried without further consideration. Do not bury refrigerant lines longer than 36 in. (914.4 mm).
7. Use only copper wire for electric connection at unit. Aluminum and clad aluminum are not acceptable for the type of connector provided.
8. Do not apply capillary tube indoor coils to these units.
9. Factory-supplied filter drier must be installed.

© 2018 Bryant Heating & Cooling Systems 7310 W. Morris St. Indianapolis, IN 46231 Printed in U.S.A. Edition Date: 01/18
Catalog No. PDS126CNA-01
Manufacturer reserves the right to discontinue, or change at any time, specifications or designs without notice and without incurring obligations.
Replaces: New