293VAN
Evolution™ Extreme Variable Speed Heat Pump with Puron Advance™ (R-454B) Refrigerant
2 to 5 Nominal Tons

PRODUCT DATA

Bryant's 293VAN Evolution® Extreme is another breakthrough product providing up to 10.5 HSPF2 heating efficiency and up to 23 SEER2 cooling efficiency. The variable speed capacity control results in strong heating capacity as the outdoor temperature drops resulting in less reliance on auxiliary heat. Lower speed operation is available when needed in cooling for enhanced comfort and dehumidification.

Refer to the AHRI directory (www.ahridirectory.org) for the most up-to-date ratings information.

Industry leading Features / Benefits

Energy Efficiency
- Up to 23 SEER2, 13.5 EER2, 10.5 HSPF2
- Microtube Technology™ refrigeration system
- Indoor air quality accessories available

Sound
- Sound level as low as 53 dBA in low speed

Comfort
- Variable speed compressor with capacity range from 20-100%
- Air cooled variable frequency drive
  - Evolution™ Connex™ System Control required
  - Energy Tracking capability with the Evolution™ Connex™ System Control and latest software version (Energy Tracking has the ability to monitor and estimate the energy consumption of your Evolution™ system.)

Reliability
- Non-ozone depleting, low global warming potential Puron Advance™ refrigerant
- High pressure switch
- Suction and discharge pressure transducer
- Electronic expansion valve (EXV) for optimum heating performance
- Filter drier (field installed)
- Internal compressor stator heat standard
- Balanced refrigeration system for maximum reliability

Flexibility and Installation:
- Vertex™ Technology compatible
- 2 control wires to outdoor unit
- Minimum and maximum airflow adjustments
- Compressor heating capacity control
- Hybrid Heat™ Dual Fuel capable

Durability
DuraGuard™ Protection Package:
- Solid, durable sheet metal construction
- Steel louver coil guard
- Baked-on, complete outer coverage, powder paint

Applications
- Heating mode operation down to -13°F (-25°C) outdoor ambient temperature.
- Cooling mode operation up to 125°F (51.7°C) outdoor ambient temperature.
- Long-line - up to 250 feet (76.2 m) total equivalent length, up to 200 feet (60.7 m) for 5T and 100 feet (30.5 m) for 2T, 3T and 4T outdoor above indoor, or up to 80 ft. (24.4 m) indoor above outdoor (See Long Line Guide for more information.)
- Low ambient cooling down to 0°F (-17.8°C) when enabled with the Evolution™ Connex™ System Control.

Model Number Nomenclature

1	2	3	4	5	6	7	8	9	10	11	12	13
N	N	N	A	A/N	N	N	N	N	A/N	A/N	N	A
2	**9**	**3**	**V**	**A**	**N**	**0**	**2**	**4**	**0**	**0**	**A**	**A**
OD Type	Refrigerant & Tier	SEER2	OD Design Type	Major Series	Voltage	Open	Nominal Cooling Capacity		Feature	Special Feature	Variation	Minor Series
2 = HP	9=R-454B Evolution	0 = 23 SEER2	V = Variable Speed	A = Original Series	N = 208-230-1		1,000 Nominal Btuh		0=Standard	0=Standard	A = Standard HP	A = Original Series

Puron ADVANCE™

AHRI CERTIFIED™ www.ahridirectory.org

Use of the AHRI Certified TM Mark indicates a manufacturer's participation in the program For verification of certification for individual products, go to www.ahridirectory.org.

C UL US

CATALOG ORDERING NUMBERS

Size	Model Number
24	293VAN02400A
36	293VAN03600A
48	293VAN04800A
60	293VAN06000A

STANDARD FEATURES

FEATURES	Unit Size			
	24	**36**	**48**	**60**
Puron Advance™ (R-454B) Refrigerant	X	X	X	X
Variable Speed Rotary Compressor	X	X	X	
Variable Speed Scroll Compressor				X
Air-Cooled Variable Frequency Drive	X	X	X	X
Louvered Coil Guard	X	X	X	X
Factory Provided, Field-Installed Filter Drier	X	X	X	X
Front-Seating Service Valves	X	X	X	X
In-unit Pressure and Temperature Protection	X	X	X	X
Suction and Discharge Pressure Transducers	X	X	X	X
High Pressure Switch	X	X	X	X
Compressor Stator Heat	X	X	X	X
Utility Interface Connections	X	X	X	X
Energy Tracking Capability	X	X	X	X
Sound Blanket	X	X	X	X
Outdoor Air Temperature Sensor	X	X	X	X
Long Line Capability	X	X	X	X

X = Standard

AHRI RATINGS

NOTE: Ratings contained in this document are subject to change at any time.

For AHRI ratings certificates, please refer to the AHRI directory www.ahridirectory.org
Additional ratings and system combinations can be accessed via the Ratings Database here: MyBryantRatings

MIN/MAX AIRFLOW TABLES

The indoor airflow delivered by this system varies significantly based on outdoor temperature, indoor unit combination, and system demand. The airflows on these tables are for duct design considerations.

Duct systems capable of these ranges will ensure the system will deliver full capacity at all outdoor temperatures. Minimum and maximum airflows can be adjusted from these numbers in the Evolution™ Connex™ System Control Heat Pump Setup screen.

Size	Cooling - Comfort Mode		Cooling - Efficiency Mode	
	Max Airflow	Min Airflow	Max Airflow	Min Airflow
24	700	300	900	350
36	900	325	1200	550
48	1200	500	1680	615
60	1400	500	1725	850

Size	Heating - Comfort Mode		Heating - Efficiency Mode	
	Max Airflow	Min Airflow	Max Airflow	Min Airflow
24	700	200	900	450
36	1200	325	1400	650
48	1610	500	1610	600
60	1650	500	1650	850

PHYSICAL DATA

UNIT SIZE	24	36	48	60
COMPRESSOR TYPE	Variable Speed Rotary			Variable Speed Scroll
REFRIGERANT	Puron Advance™ (R-454B)			
Charge lb* (kg)	11.8 (5.35)	12.1 (5.49)	12.3 (5.58)	13.0 5.90)
Outdoor Htg Exp. Device	EXV	EXV	EXV	EXV
COND FAN	Forward Swept Propeller Type, Direct Drive			
Air Discharge	Vertical			
Maximum Air Qty (CFM)	5000	4700	5000	5000
Motor HP	1/3	1/3	1/3	1/3
Motor RPM	200-800	200-750	200-800	200-800
COND COIL				
Face Area (sq ft.)	30.1	30.1	30.1	30.1
Fins per In.	20	20	20	20
Rows	2	2	2	2
Circuits	8	8	9	9
VALVE CONNECT. (In. ID)				
Vapor	3/4	7/8	7/8	7/8
Liquid	3/8			
REFRIGERANT TUBES† (In. OD)				
Rated Vapor†	3/4	7/8	1-1/8	1 - 1/8
Max Rated Liquid Line‡	3/8			

*.For 15 ft. lineset
†.Units are rated with 25 ft (7.6 m) of lineset length. See Vapor Line Sizing and Cooling Capacity Loss table when using other sizes and lengths of lineset.
‡.See Liquid Line Sizing For Cooling Only Systems with Puron Advance™ Refrigerant tables.
Note: See unit Installation Instruction for proper installation.

ELECTRICAL DATA

UNIT SIZE	V-PH	OPER VOLTS*		COMPR		FAN	MCA	MAX FUSE† or CKT BRK AMPS	SCCR
		MAX	MIN	MRC	RLA	FLA			
24	208-230-1	253	197	25	11.6	0.88	19.7	25	5kA rms
36				25	14.3	0.88	23.8	25	5kA rms
48				35	20.4	0.88	31.0	40	5kA rms
60				35	27.4	0.88	37.5	40	5kA rms

*. Permissible limits of the voltage range at which the unit will operate satisfactorily
†. Time-Delay fuse.
FLA - Full Load Amps, **MCA**-Minimum Circuit Amps, **MRC** - Maximum Rated Current, **RLA**-Rated Load Amps
SCCR - Short-Circuit Current Rating
NOTE: Control circuit is 24-V on all units and requires external power source. Copper wire must be used from service disconnect to unit.
All motors/compressors contain internal overload protection.

REFRIGERANT PIPING LENGTH LIMITATIONS

Maximum Line Lengths:

The maximum allowable equivalent length for Heat Pumps varies depending on the vertical separation. See the tables below for allowable lengths depending on whether the outdoor unit is on the same level, above or below the outdoor unit.

Maximum Line Lengths for Heat Pump Applications

	MAXIMUM ACTUAL LENGTH* ft (m)	MAXIMUM EQUIVALENT LENGTH† ft (m)	MAXIMUM VERTICAL SEPARATION ft (m)
Units on equal level	200 (61.0)	250 (76.2)	N/A
Outdoor unit ABOVE indoor unit	200 (61.0)	250 (76.2)	5T - 200 (61.0) 2T/3T/4T - 100 (30.5)
Outdoor unit BELOW indoor unit	200 (61.0)	250 (76.2)	80 (24.4)

*. Maximum actual length not to exceed 200 ft (61 m)
†. Equivalent length accounts for losses due to elbows or fitting. See the Long Line Guideline for details.

LONG LINE APPLICATIONS

An application is considered Long Line when the refrigerant level in the system requires the use of accessories to maintain acceptable refrigerant management for systems reliability. 293VAN Heat Pumps do not require any additional accessories for Long Line applications. Defining a system as long line depends on the liquid line diameter, actual length of the tubing, and vertical separation between the indoor and outdoor units.

For heat pump systems, the chart below shows when an application is considered Long Line.

Refrigerant Long Line Description ft (m)

Liquid Line Size	Units On Same Level ft (m)	Outdoor Above Indoor ft (m)	Outdoor Below Indoor ft (m)
3/8	80 (24.4)	80 (24.4)	20 (6.1) vertical or 80 (24.4) total

NOTE: See Long Line Guideline for details

COOLING CAPACITY LOSS TABLE

Nominal Size (Btuh)	Line OD (in)	Cooling Capacity Loss (%) Equivalent Length (ft)										
		25	50	75	80	100	125	150	175	200	225	250
24000	5/8	0.8	0.7	3.3	3.6	4.7	5.9	7.2	8.3	9.4	10.5	11.5
	3/4	0.0	0.7	1.4	1.6	2.2	2.9	3.6	4.3	5.0	5.6	6.2
36000	5/8	1.7	3.9	6.0	6.5	8.2	10.2	12.0	13.8	15.4	17.0	18.4
	3/4	0.4	1.3	2.3	2.5	3.4	4.4	5.4	6.4	7.3	8.3	9.1
	7/8	0.0	0.6	1.1	1.2	1.8	2.5	3.2	3.9	4.5	5.2	5.8
48000	3/4	1.2	2.6	4.0	4.5	5.7	7.3	8.6	10.0	11.3	12.5	13.7
	7/8	0.5	1.2	2.0	2.3	3.1	4.0	4.9	5.8	6.8	7.6	8.4
	1 1/8	0.0	0.2	0.5	0.7	1.1	1.6	2.1	2.6	3.1	3.5	4.0
60000	3/4	1.6	3.5	5.4	5.8	7.3	9.1	10.8	12.4	13.9	15.3	16.6
	7/8	0.7	1.6	2.8	3.0	3.9	5.0	6.1	7.1	8.1	9.1	10.0
	1 1/8	0.0	0.3	0.8	0.9	1.3	1.8	2.3	2.8	3.3	3.8	4.3

Manufacturer reserves the right to change, at any time, specifications and designs without notice and without obligations.

ACCESSORIES

KIT NUMBER	KIT NAME	24	36	48	60
KSASH2601COP	SOUND BLANKET (ACCUMULATOR)	X	X	X	
KSASH2701COP	SOUND BLANKET (ACCUMULATOR)				X
KSASF0201AAA	SUPPORT FEET	X	X	X	X
KHASS0606MPK	SNOW STAND	X	X	X	X

X = Accessory

ACCESSORY USAGE GUIDELINE

ACCESSORY	REQUIRED FOR LOW-AMBIENT COOLING APPLICATIONS (Below 55°F/12.8°C)	REQUIRED FOR LONG LINE APPLICATIONS	REQUIRED FOR SEA COAST APPLICATIONS (Within 2 miles/3.22 km)
Compressor Stator Heat	Standard with Evolution™ Connex™ System Control	No	No
Evaporator Freeze Protection	Standard with Evolution™ Connex™ System Control	No	No
Low-Ambient Control	Standard with Evolution™ Connex™ System Control	No	No
Support Feet	Recommended	No	Recommended
Winter Start Control	Standard with Evolution™ Connex™ System Control	No	No

Accessory Description and Usage

Snow Stand

Coated wire rack which supports unit 18 in. (457.2 mm) above mounting pad to allow for drainage from unit base.

Usage Guideline:

Suggested in the following applications:

- Unit installations in heavy snowfall areas.
- Unit installations in snow drift locations.
- Unit installations in areas of prolonged subfreezing temperatures.
- All commercial installations.

Sound Blanket (Accumulator)

Wraparound sound reducing cover for the accumulator. Reduces possible transient tones that may resonate in the accumulator due to variability in system operation.

Usage Guideline:

Although all units are designed and tested to eliminate unpleasant tones, in the unlikely event a transient tone is experienced, this sound blanket can reduce the tone by up to 10 dB.

Support Feet

Four or five stick-on plastic feet that raise the unit 4 in. (101.6 mm) above the mounting pad. This allows sand, dirt, and other debris to be flushed from the unit base, minimizing corrosion.

Usage Guideline:

Suggested in the following applications:

Coastal installations.

Windy areas or where debris is normally circulating.

Rooftop installations.

For improved sound ratings.

SOUND POWER LEVEL

Unit Size	Typical Octave Band Spectrum (dB, without tone adjustment)	Min Cooling	Nominal* Cooling	Min Heating	Nominal* Heating
24	Speed	900	3600	900	4020
	125	62.8	66.1	62.0	65.7
	250	57.0	61.2	55.1	63.7
	500	48.5	58.4	53.3	61.5
	1000	46.5	55.5	45.2	58.8
	2000	40.5	53.0	39.3	55.1
	4000	36.3	51.0	37.2	54.6
	8000	43.2	48.6	43.9	51.8
	Sound Rating (dBA)	53	62	54	64
36	Speed	900	4200	900	4320
	125	61.3	65.4	65.3	65.6
	250	61.1	61.7	62.0	60.4
	500	51.2	61.4	50.2	58.1
	1000	46.3	56.3	45.5	55.0
	2000	39.9	54.3	37.3	53.8
	4000	36.6	52.3	37.3	53.0
	8000	45.0	53.3	45.6	52.6
	Sound Rating (dBA)	56	64	55	68
48	Speed	900	3300	900	3720
	125	61.3	64.5	65.1	65.8
	250	55.7	68.1	56.3	60.8
	500	53.9	65.2	53.7	60.7
	1000	52.2	61.2	45.1	54.2
	2000	41.5	57.4	39.8	54.1
	4000	37.7	54.7	36.7	53.6
	8000	42.8	56.6	40.1	59.8
	Sound Rating (dBA)	56	67	56	68
60	Speed	960	3540	900	4440
	125	65.4	72.0	61.6	69.2
	250	57.6	69.1	56.4	66.9
	500	56.3	66.1	53.1	65.6
	1000	48.4	64.3	44.9	62.5
	2000	46.1	63.8	44.0	63.0
	4000	43.7	56.8	47.1	62.4
	8000	44.2	58.4	44.9	61.6
	Sound Rating (dBA)	58	72	55	71

*. Nominal condition data taken from maximum speed operating at 95°F in cooling and 47°F in heating.
Note: Tested in compliance with AHRI 270-2008 but not listed with AHRI.

CHARGING SUBCOOLING

UNIT SIZE	NOMINAL SUBCOOLING*	REQUIRED SUBCOOLING _F (_C) - See System Control
24	5	Subcooling recommendation displayed on System Control in Charging Mode must be followed
36	7	
48	7	
60	10	

*. Nominal subcooling targets for use as reference or in specific applications with 25 ft. (7.6 m) lineset, 95°F outdoor ambient, and 80°F/67°F indoor DB/WB.

DIMENSIONS

UNIT	SERIES	ELECTRICAL CHARACTERISTICS				A		B		C		D		E		F		G		H		I		J		K		OPERATING WEIGHT		SHIPPING WEIGHT		SHIPPING LENGTH / WIDTH (Sq.)		SHIPPING HEIGHT	
		208-230-1-60	208/230-3-60	460-3-60	575-3-60	INCH	MM	INCH	MM	INCH	MM	INCH	MM	INCH	MM	INCH	MM	INCH	MM	INCH	MM	INCH	MM	INCH	MM	INCH	MM	Lbs	Kgs	Lbs	Kgs	INCH	MM	INCH	MM
293VA*024*0A	0	Y	N	N	N	35	889.0	47 3/16	1199.0	3/4	19.1	6 9/16	166.1	28 7/16	722.8	9 1/8	231.3	1 1/8	28.2	3 13/16	97.4	16 3/4	425.5	16	406.4	25 3/4	654.1	301	136.5	331	150.1	38	965.0	51	1295.7
293VA*036*0A	0	Y	N	N	N	35	889.0	47 3/16	1199.0	7/8	22.2	6 9/16	166.1	28 7/16	722.8	9 1/8	231.3	1 1/8	28.2	3 13/16	97.4	16 1/4	412.8	17 1/4	438.2	23	584.2	318	144.2	348	157.9	38	965.0	51	1295.7
293VA*048*0A	0	Y	N	N	N	35	889.0	47 3/16	1199.0	7/8	22.2	6 9/16	166.1	28 7/16	722.8	9 1/8	231.3	1 1/8	28.2	3 13/16	97.4	15 1/2	393.7	16	406.4	22 1/2	571.5	346	156.9	376	170.6	38	965.0	51	1295.7
293VA*060*0A	0	Y	N	N	N	35	889.0	47 3/16	1199.0	7/8	22.2	6 9/16	166.1	28 7/16	722.8	9 1/8	231.3	1 1/8	28.2	3 13/16	97.4	14 1/2	368.3	16	406.4	22 1/2	571.5	366	166.0	397	180.1	38	965.0	51	1295.7

Y=YES
N=NO

NOTES:

1. CENTER OF GRAVITY .

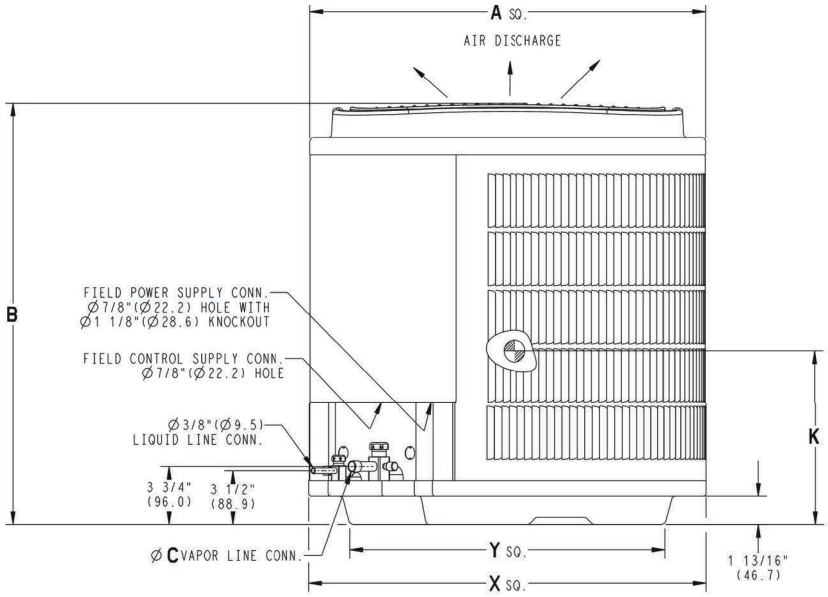

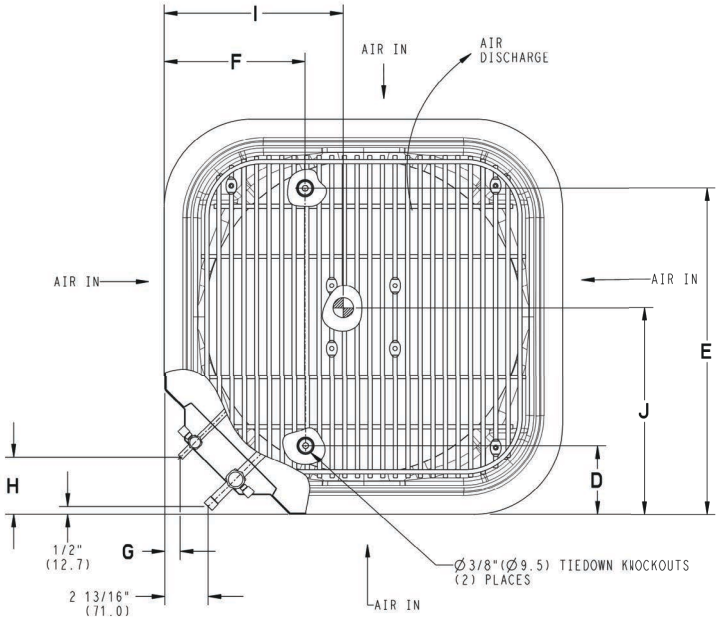

UNIT SIZE	"X" MINIMUM GROUND MOUNTING PAD APPLICATION DIMENSIONS		"Y" MINIMUM ROOF-TOP MOUNTING PAD APPLICATION DIMENSIONS	
-	23 1/8	587.3	17 7/8	454.6
-	25 3/4	654.0	20 7/16	518.5
-	31 3/16	792.5	22 15/16	583.2
24,36,48,60	35	889.0	26 3/4	679.7

NOTE: ALL DIMENSIONS IN INCH (MM)

U.S. ECCN: Not Subject to Regulation (N.S.R.)

SD6025-4 REV. A

Manufacturer reserves the right to change, at any time, specifications and designs without notice and without obligations.

CLEARANCES

Clearances (various examples)

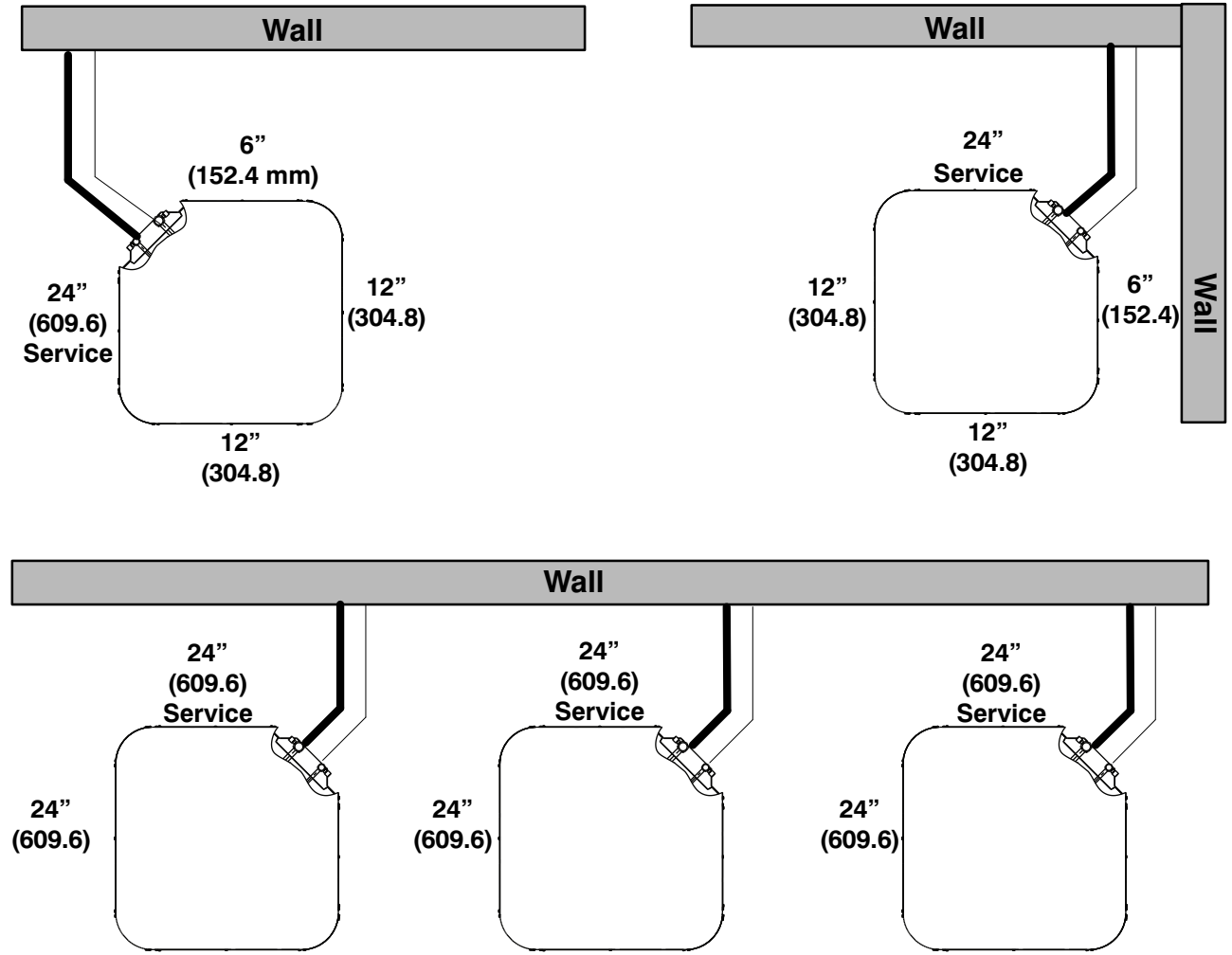

Note: Numbers in ( ) = mm

IMPORTANT: When installing multiple units in an alcove, roof well, or partially enclosed area, ensure there is adequate ventilation to prevent re-circulation of discharge air.

A07833

Manufacturer reserves the right to change, at any time, specifications and designs without notice and without obligations.

BALANCE POINT WORKSHEET

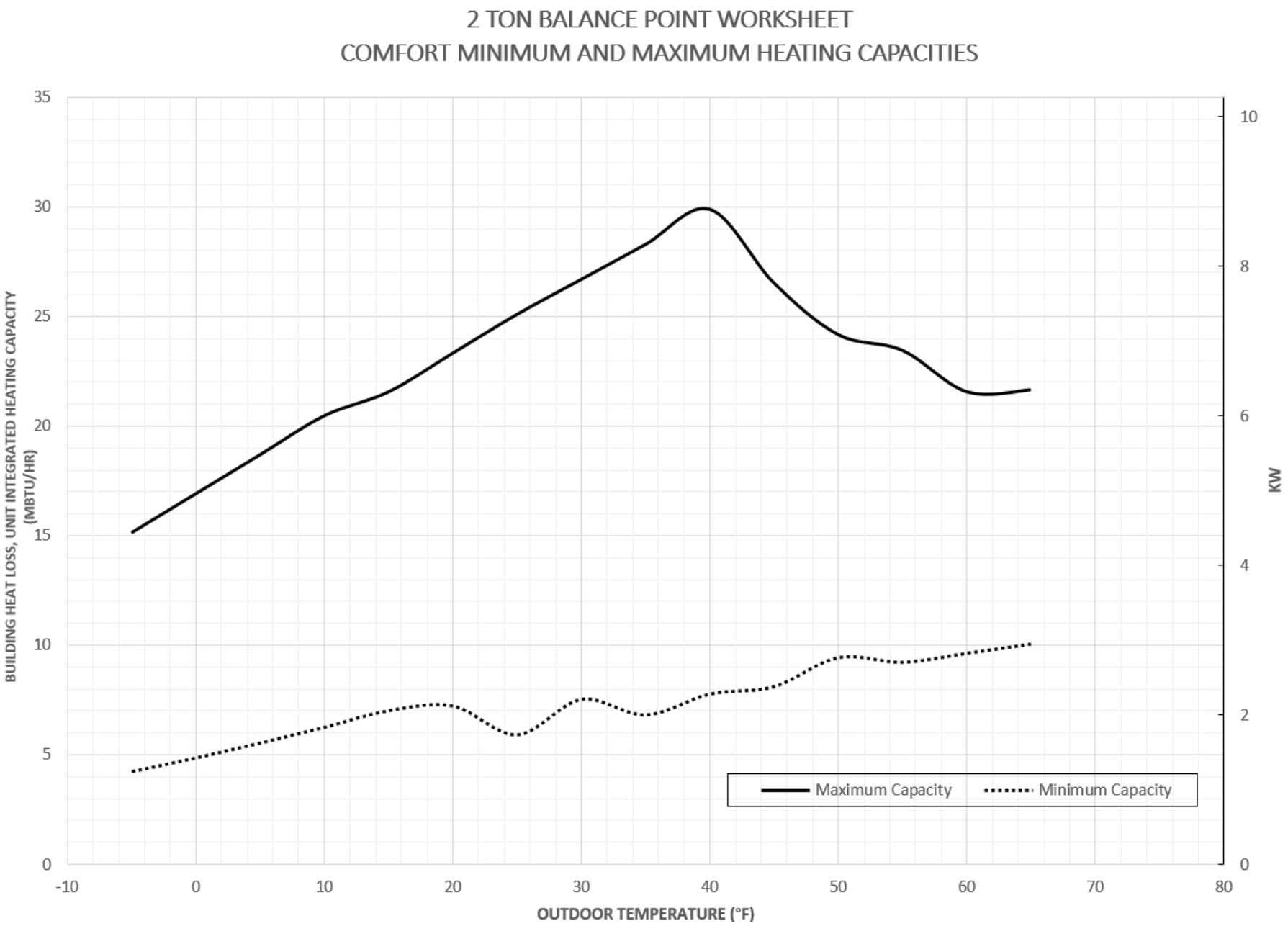

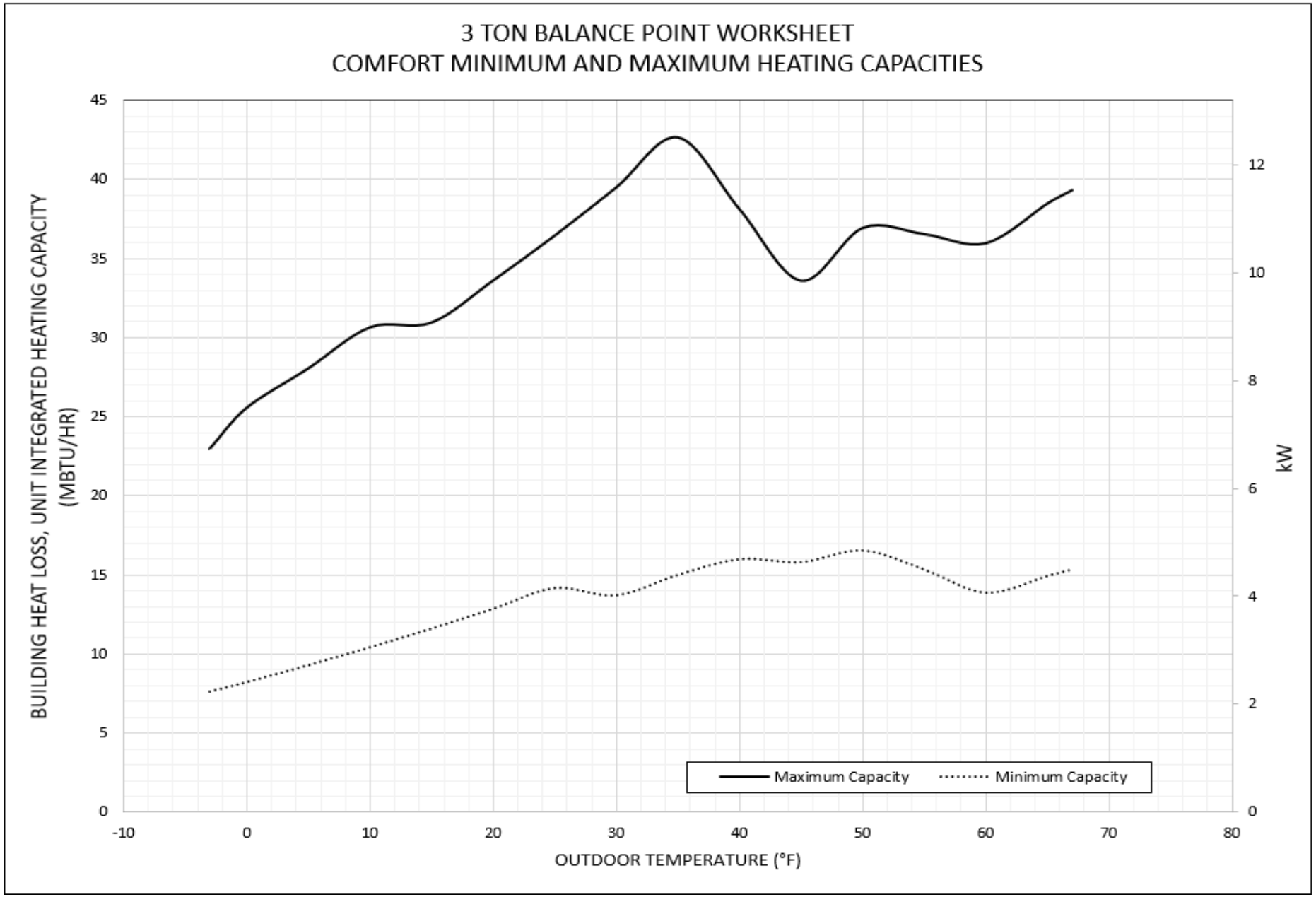
3 TON BALANCE POINT WORKSHEET
COMFORT MINIMUM AND MAXIMUM HEATING CAPACITIES
BUILDING HEAT LOSS, UNIT INTEGRATED HEATING CAPACITY (MBTU/HR)
kW
OUTDOOR TEMPERATURE (°F)
Maximum Capacity
Minimum Capacity
45
40
35
30
25
20
15
10
5
0
12
10
8
6
4
2
0
-10
0
10
20
30
40
50
60
70
80

BALANCE POINT WORKSHEET - Continued

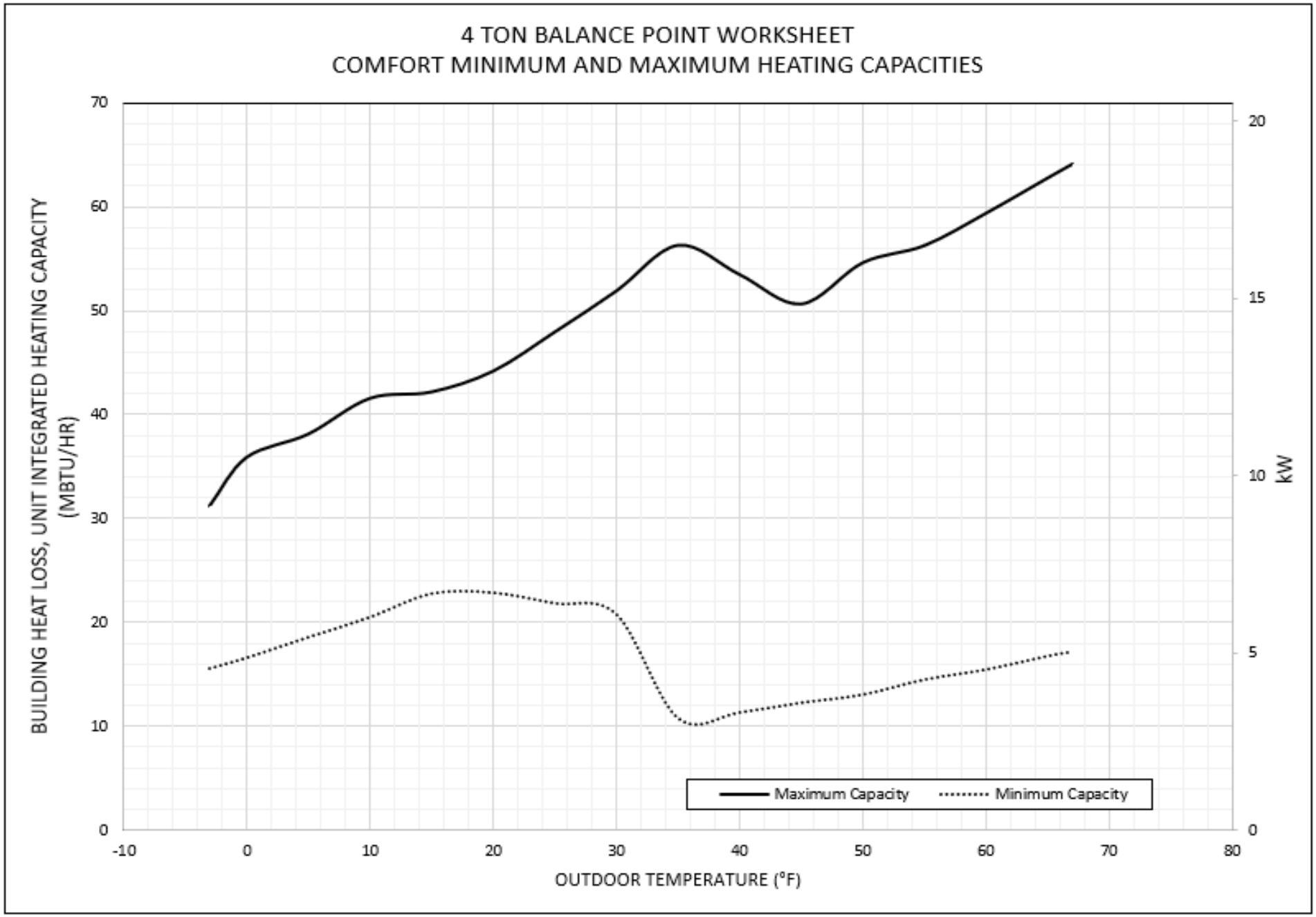

BALANCE POINT WORKSHEET - Continued

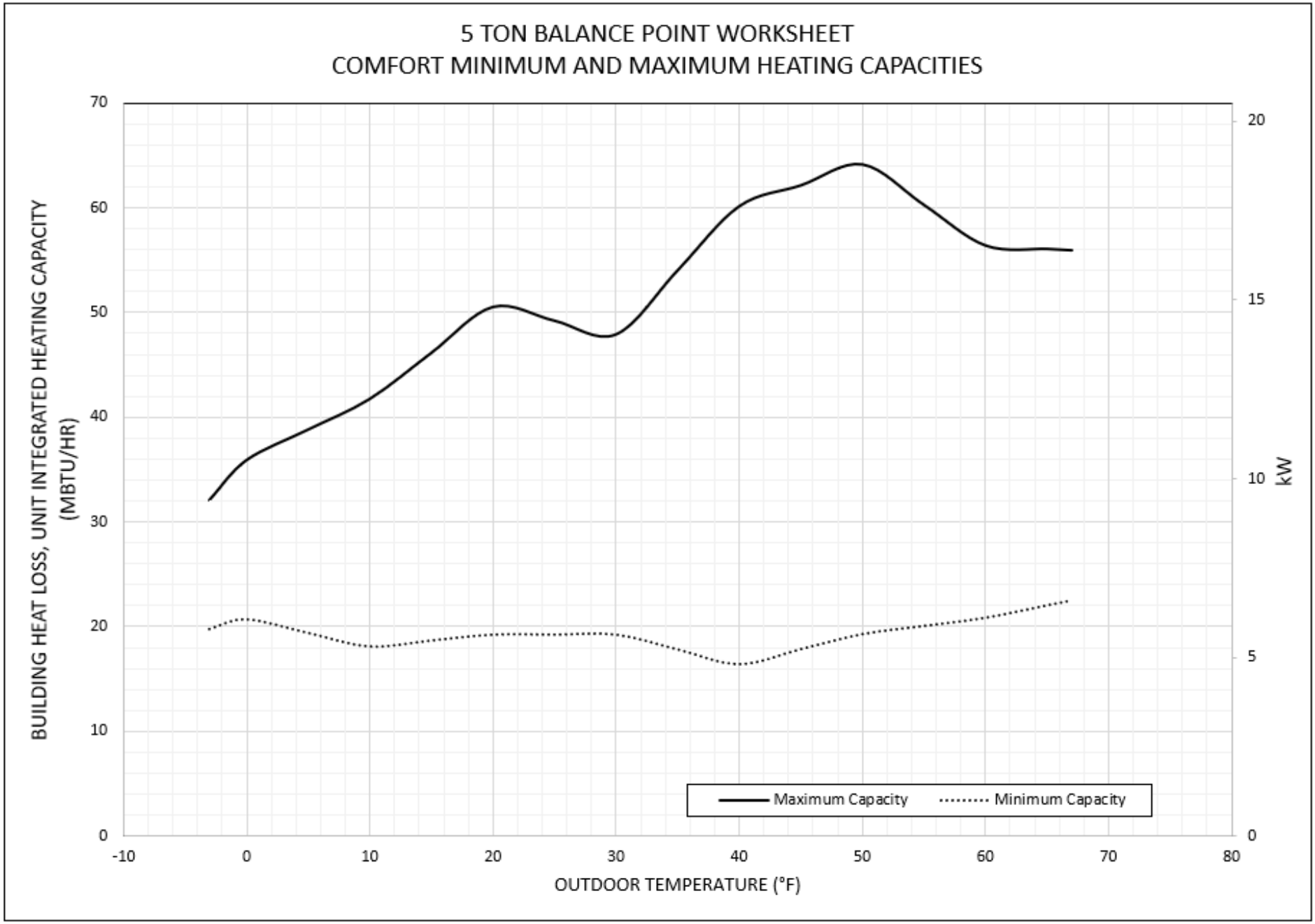

Detailed Cooling Capacities# - Comfort + Dehumidify Mode

EVAPORATOR AIR °F (°C)		CONDENSER ENTERING AIR TEMPERATURES °F (°C)																											
		65.0 (18.3)				75.0 (23.9)				85.0 (29.4)				95.0 (35.0)				105.0 (40.6)				115.0 (46.1)				125.0 (51.7)			
EDB	EWB	ID SCFM	Capacity MBtuh†		Total Sys. KW**	ID SCFM	Capacity MBtuh†		Total Sys. KW**	ID SCFM	Capacity MBtuh†		Total Sys. KW**	ID SCFM	Capacity MBtuh†		Total Sys. KW**	ID SCFM	Capacity MBtuh†		Total Sys. KW**	ID SCFM	Capacity MBtuh†		Total Sys. KW**	ID SCFM	Capacity MBtuh†		Total Sys. KW**
			Total	Sens‡			Total	Sens‡			Total	Sens‡			Total	Sens‡			Total	Sens‡			Total	Sens‡			Total	Sens‡	
293VAN024 Maximum Demand																													
75 (23.9)	72.0 (22.2)	700	28.2	11	0.9	700	27.8	10.9	1.03	700	26.4	10.2	1.29	700	24.2	9.1	1.63	700	22	8	2.05	650	20.2	7.2	2.35	600	19	6.7	2.29
	67.0 (19.4)		25.4	14.1	0.97		25.2	14.2	1.09		23.8	13.4	1.33		21.8	12.1	1.66		19.8	10.8	2.07		18.2	9.7	2.36		17.2	9	2.31
	63.0 (17.2)††		23.4	16.6	1.02		23.2	16.8	1.13		21.8	15.9	1.35		20	14.4	1.68		18.3	12.9	2.09		16.7	11.6	2.37		15.8	10.8	2.3
	57.0 (13.9)		21	20.2	1.08		20.8	20.2	1.16		19.9	19	1.38		18.4	17	1.7		16.9	15	2.09		15.5	13.5	2.36		14.7	12.6	2.3
80 (26.7)	72.0 (22.2)	700	28	14.2	0.9	700	27.8	14.3	1.03	700	26.2	13.4	1.28	700	24	12.1	1.62	700	22	10.8	2.06	650	20.2	9.7	2.35	600	19	9.1	2.31
	67.0 (19.4)		25.4	17.3	0.98		25	17.5	1.08		23.6	16.6	1.32		20.6	14.2	1.7		19.8	13.5	2.08		18.1	12.2	2.36		16.4	11.3	2.27
	63.0 (17.2)††		23.4	19.8	1.02		23.2	20	1.12		21.8	19	1.35		20.2	17.4	1.69		18.4	15.7	2.09		16.8	14.1	2.36		15.9	13.1	2.3
	57.0 (13.9)		22.2	21.6	1.05		22.2	21.6	1.14		21.2	20.2	1.36		19.6	18.1	1.68		18.1	16.1	2.09		16.5	14.4	2.36		15.6	13.4	2.29
293VAN024 Intermediate Demand																													
75 (23.9)	72.0 (22.2)	435	17.3	6.8	0.41	435	17.3	6.8	0.52	435	16.2	6.3	0.67	435	14.8	5.6	0.89	435	13.7	5	1.2	415	12.7	4.5	1.45	400	12.2	4.3	1.49
	67.0 (19.4)		15.5	8.7	0.46		15.5	8.9	0.56		14.5	8.3	0.71		13.2	7.4	0.92		12.2	6.7	1.22		11.3	6.1	1.47		10.9	5.8	1.49
	63.0 (17.2)††		14.2	10.3	0.49		14.2	10.4	0.59		13.3	9.8	0.73		12.1	8.9	0.94		11.1	8	1.23		10.3	7.3	1.47		9.9	7	1.49
	57.0 (13.9)		12.7	12.3	0.53		12.8	12.4	0.61		12.1	11.5	0.75		11.1	10.2	0.95		10.3	9.2	1.24		9.6	8.3	1.48		9.3	7.9	1.5
80 (26.7)	72.0 (22.2)	435	17.3	8.8	0.41	435	17.3	8.9	0.52	435	16.2	8.3	0.68	435	14.6	7.4	0.89	435	13.6	6.7	1.19	415	12.6	6.2	1.45	400	12.1	5.9	1.48
	67.0 (19.4)		15.5	10.7	0.46		15.5	10.9	0.56		14.5	10.3	0.71		13.2	9.3	0.92		12.2	8.4	1.22		11.2	7.7	1.46		10.8	7.4	1.49
	63.0 (17.2)††		14.2	12.2	0.49		14.2	12.5	0.58		13.3	11.8	0.73		12.1	10.7	0.93		11.2	9.7	1.23		10.4	8.9	1.48		10	8.3	1.49
	57.0 (13.9)		13.6	13.1	0.51		13.7	13.3	0.6		12.9	12.3	0.73		11.9	11	0.94		11.1	9.8	1.23		10.3	9	1.48		9.9	8.5	1.49
293VAN024 Minimum Demand																													
75 (23.9)	72.0 (22.2)	300	11.6	4.6	0.25	300	12	4.8	0.35	300	11.2	4.3	0.46	300	10	3.8	0.61	300	9.3	3.4	0.85	300	9	3.2	1.09	300	8.7	3.1	1.13
	67.0 (19.4)		10.4	5.9	0.29		10.7	6.1	0.38		9.9	5.7	0.48		8.9	5	0.63		8.2	4.5	0.86		7.9	4.3	1.1		7.6	4.2	1.13
	63.0 (17.2)††		9.5	6.9	0.32		9.8	7.2	0.4		9	6.7	0.5		8.1	6	0.65		7.5	5.5	0.88		7.2	5.2	1.12		6.9	5.1	1.14
	57.0 (13.9)		8.5	8.2	0.34		8.7	8.5	0.42		8.2	7.8	0.51		7.5	6.9	0.66		6.9	6.2	0.88		6.7	5.8	1.12		6.5	5.6	1.14
80 (26.7)	72.0 (22.2)	300	11.6	5.9	0.25	300	12	6.2	0.35	300	11.1	5.7	0.46	300	10	5.1	0.61	300	9.2	4.6	0.84	300	9	4.4	1.1	300	8.6	4.3	1.13
	67.0 (19.4)		10.3	7.3	0.29		10.7	7.5	0.38		9.9	7.1	0.48		8.7	5.9	0.69		8.2	5.8	0.87		7.9	5.5	1.11		7.9	5.4	1.14
	63.0 (17.2)††		9.5	8.3	0.31		9.8	8.6	0.4		9	8.1	0.5		8.1	7.3	0.65		7.5	6.6	0.88		7.2	6.3	1.11		7.1	6	1.15
	57.0 (13.9)		9.1	8.8	0.33		9.4	9.1	0.41		8.8	8.4	0.5		8	7.4	0.65		7.5	6.6	0.88		7.2	6.3	1.11		7.1	6	1.15

Manufacturer reserves the right to change, at any time, specifications and designs without notice and without obligations.

Detailed Cooling Capacities# - Comfort + Dehumidify Mode (Continued)

EVAPORATOR AIR °F (°C)		CONDENSER ENTERING AIR TEMPERATURES °F (°C)																											
		65.0 (18.3)				75.0 (23.9)				85.0 (29.4)				95.0 (35.0)				105.0 (40.6)				115.0 (46.1)				125.0 (51.7)			
EDB	EWB	ID SCFM	Capacity MBtuh† Total	Capacity MBtuh† Sens‡	Total Sys. KW**	ID SCFM	Capacity MBtuh† Total	Capacity MBtuh† Sens‡	Total Sys. KW**	ID SCFM	Capacity MBtuh† Total	Capacity MBtuh† Sens‡	Total Sys. KW**	ID SCFM	Capacity MBtuh† Total	Capacity MBtuh† Sens‡	Total Sys. KW**	ID SCFM	Capacity MBtuh† Total	Capacity MBtuh† Sens‡	Total Sys. KW**	ID SCFM	Capacity MBtuh† Total	Capacity MBtuh† Sens‡	Total Sys. KW**	ID SCFM	Capacity MBtuh† Total	Capacity MBtuh† Sens‡	Total Sys. KW**
293VAN036 Maximum Demand																													
75 (23.9)	72.0 (22.2)	900	44.5	17	1.79	875	40	15.9	2.03	850	40	15.7	2.15	800	36.4	14.5	2.44	750	33.8	13.4	3.39	700	31.6	12.5	3.87	625	29	11.5	4.33
	67.0 (19.4)		40	21.4	1.85		36.2	20	2.1		36	19.9	2.18		32.8	18.4	2.46		30.4	17	3.4		28.4	15.8	3.87		26	14.4	4.29
	63.0 (17.2)††		37	24.8	1.91		33.4	23.2	2.14		33.2	23.2	2.21		30.2	21.4	2.47		28	19.7	3.41		26	18.4	3.85		23.8	16.7	4.25
	57.0 (13.9)		32.8	30	1.95		29.6	28	2.18		29.4	28	2.23		26.8	25.8	2.48		24.8	23.8	3.4		23	22.2	3.83		21	20	4.22
80 (26.7)	72.0 (22.2)	900	44.5	21.4	1.8	875	40	20	2.04	850	40	20	2.16	800	36.4	18.4	2.44	750	33.8	17	3.4	700	31.4	15.9	3.87	625	28.8	14.5	4.31
	67.0 (19.4)		40	25.8	1.86		36.2	24.2	2.1		36	24.2	2.19		32.8	22.2	2.46		30.4	20.6	3.41		28.4	19.2	3.88		26	17.4	4.3
	63.0 (17.2)††		37	29.4	1.91		33.4	27.4	2.14		33	27.4	2.2		30.2	25.2	2.47		28	23.4	3.41		26	21.8	3.85		23.8	19.7	4.27
	57.0 (13.9)		34.2	32.8	1.95		31	30.6	2.18		30.8	30.4	2.23		28	28	2.47		26	25.6	3.4		24.2	24	3.84		22	21.8	4.23
293VAN036 Intermediate Demand																													
75 (23.9)	72.0 (22.2)	570	28	10.8	0.82	540	25	9.9	1.02	520	24.6	9.8	1.12	500	22.4	9	1.32	480	21.8	8.7	2.02	470	21.2	8.4	2.45	430	20	8	2.88
	67.0 (19.4)		25.2	13.6	0.88		22.4	12.5	1.07		22	12.3	1.15		20	11.3	1.34		19.5	10.9	2.04		18.9	10.6	2.45		17.9	9.9	2.88
	63.0 (17.2)††		23.2	15.7	0.93		20.6	14.4	1.11		20.2	14.2	1.18		18.3	13.2	1.36		17.9	12.6	2.06		17.3	12.3	2.45		16.3	11.5	2.86
	57.0 (13.9)		20.4	18.9	0.99		18.1	17.3	1.15		17.7	17.1	1.21		16	15.9	1.37		15.6	15.2	2.05		15.1	14.8	2.44		14.2	13.7	2.83
80 (26.7)	72.0 (22.2)	570	28	13.6	0.82	540	24.8	12.5	1.01	520	24.4	12.4	1.11	500	22.2	11.4	1.31	480	21.8	11	2.03	470	21	10.7	2.44	430	19.9	10	2.88
	67.0 (19.4)		25.2	16.4	0.89		22.4	15	1.07		22	14.9	1.16		19.9	13.8	1.34		19.5	13.2	2.04		18.9	12.9	2.45		17.8	12	2.87
	63.0 (17.2)††		23	18.5	0.93		20.6	17	1.11		20.2	16.8	1.18		18.3	15.6	1.37		17.8	14.9	2.05		17.2	14.5	2.44		16.3	13.5	2.86
	57.0 (13.9)		21.4	20.4	0.97		19	18.8	1.14		18.7	18.4	1.2		17.1	17	1.38		16.5	16.3	2.05		16	15.9	2.44		15	14.8	2.84
293VAN036 Minimum Demand																													
75 (23.9)	72.0 (22.2)	400	19.6	7.6	0.49	375	17.3	6.9	0.65	350	16.8	6.7	0.76	350	15.3	6.2	0.9	350	15.7	6.3	1.46	350	15.7	6.3	1.84	325	15.3	6.1	2.26
	67.0 (19.4)		17.6	9.5	0.55		15.5	8.6	0.7		15	8.3	0.79		13.6	7.8	0.93		14	7.9	1.49		14	7.9	1.85		13.6	7.6	2.26
	63.0 (17.2)††		16.1	11	0.59		14.1	10	0.73		13.6	9.6	0.81		12.4	9	0.95		12.7	9.1	1.49		12.8	9.1	1.87		12.4	8.7	2.25
	57.0 (13.9)		14.1	13.1	0.64		12.3	11.9	0.77		11.9	11.5	0.85		10.8	10.8	0.96		11.1	10.9	1.51		11.1	10.9	1.86		10.7	10.4	2.23
80 (26.7)	72.0 (22.2)	400	19.6	9.6	0.49	375	17.3	8.7	0.65	350	16.7	8.4	0.75	350	15.2	7.9	0.9	350	15.7	8	1.47	350	15.7	8	1.85	325	15.3	7.7	2.27
	67.0 (19.4)		17.5	11.5	0.55		15.4	10.4	0.7		14.9	10.1	0.79		13.6	9.5	0.93		13.9	9.5	1.48		14	9.5	1.86		13.6	9.1	2.26
	63.0 (17.2)††		16	12.9	0.59		14.1	11.8	0.73		13.6	11.4	0.82		12.3	10.7	0.94		12.7	10.8	1.5		12.7	10.8	1.85		12.4	10.3	2.26
	57.0 (13.9)		14.8	14.2	0.62		13	12.9	0.76		12.6	12.4	0.83		11.6	11.5	0.95		11.8	11.7	1.5		11.8	11.7	1.86		11.4	11.2	2.25

Manufacturer reserves the right to change, at any time, specifications and designs without notice and without obligations.

Detailed Cooling Capacities# - Comfort + Dehumidify Mode (Continued)

EVAPORATOR AIR °F (°C)		CONDENSER ENTERING AIR TEMPERATURES °F (°C)																											
		65.0 (18.3)				75.0 (23.9)				85.0 (29.4)				95.0 (35.0)				105.0 (40.6)				115.0 (46.1)				125.0 (51.7)			
EDB	EWB	ID SCFM	Capacity MBtuh†		Total Sys. KW**	ID SCFM	Capacity MBtuh†		Total Sys. KW**	ID SCFM	Capacity MBtuh†		Total Sys. KW**	ID SCFM	Capacity MBtuh†		Total Sys. KW**	ID SCFM	Capacity MBtuh†		Total Sys. KW**	ID SCFM	Capacity MBtuh†		Total Sys. KW**	ID SCFM	Capacity MBtuh†		Total Sys. KW**
			Total	Sens‡			Total	Sens‡			Total	Sens‡			Total	Sens‡			Total	Sens‡			Total	Sens‡			Total	Sens‡	
293VAN048 Maximum Demand																													
75 (23.9)	72.0 (22.2)	1200	67	25.2	2.1	1200	53.5	20.2	2.39	1200	59.5	22.4	2.98	1100	47.5	19	3.19	1000	44	16.6	3.79	1000	41	15.5	4.29	900	37	14.1	4.74
	67.0 (19.4)		61	32	2.19		48.5	25.8	2.46		54	29	3.04		43	24.4	3.21		40	21.4	3.81		37.2	20.2	4.28		33.6	18.4	4.71
	63.0 (17.2)††		56.5	37.4	2.25		45	30.2	2.51		50	34.2	3.08		40	28.8	3.25		36.8	25	3.79		34.4	24	4.26		31.2	21.8	4.7
	57.0 (13.9)		51	45.5	2.33		40.5	36.8	2.57		44.5	41.5	3.09		35.6	35	3.24		32.8	30.4	3.76		30.8	29	4.21		28	26.4	4.64
80 (26.7)	72.0 (22.2)	1200	67	32	2.11	1200	53.5	25.8	2.4	1200	59.5	29	2.99	1100	47.5	24.4	3.21	1000	43.5	21.2	3.76	1000	40.5	20.2	4.25	900	37	18.3	4.77
	67.0 (19.4)		61	38.5	2.2		48.5	31.4	2.47		54	35.4	3.05		43	29.8	3.23		39.5	26	3.77		37	24.8	4.27		33.4	22.4	4.72
	63.0 (17.2)††		56.5	44	2.25		45	35.8	2.51		50	40.5	3.08		40	34.2	3.25		36.8	29.6	3.79		34.2	28.6	4.23		31.2	25.8	4.7
	57.0 (13.9)		52.5	49.5	2.29		42	39.5	2.53		47	44.5	3.07		37.6	37.4	3.24		34.6	32.6	3.78		32.8	30.8	4.25		29.6	27.8	4.68
293VAN048 Intermediate Demand																													
75 (23.9)	72.0 (22.2)	730	39	14.8	0.91	730	31.6	12	1.15	730	35.6	13.4	1.54	700	29.4	11.8	1.76	730	32.6	12.4	2.66	770	32.6	12.4	3.31	730	45.5	17.1	3.63
	67.0 (19.4)		35.4	18.9	0.99		28.6	15.4	1.21		32.2	17.3	1.59		26.6	15.3	1.8		29.4	15.8	2.67		29.6	16	3.32		27	14.8	3.7
	63.0 (17.2)††		32.6	22	1.04		26.4	18.1	1.25		29.6	20.4	1.61		24.4	18	1.81		27.2	18.4	2.69		27.2	18.9	3.3		24.8	17.5	3.67
	57.0 (13.9)		29	26.8	1.1		23.4	22	1.29		26.4	24.6	1.64		21.8	21.6	1.83		24	22.4	2.67		24.2	22.8	3.28		22.2	21	3.63
80 (26.7)	72.0 (22.2)	730	39	18.9	0.92	730	31.4	15.4	1.15	730	35.4	17.3	1.54	700	29.2	15.3	1.75	730	32.4	15.8	2.66	770	32.6	16	3.31	730	29.6	14.8	3.71
	67.0 (19.4)		35.2	23	0.98		28.4	18.8	1.21		32	21.2	1.58		26.4	18.7	1.79		29.4	19.2	2.68		29.4	19.6	3.3		26.8	18.2	3.7
	63.0 (17.2)††		32.6	26.2	1.04		26.2	21.4	1.24		29.6	24.2	1.61		24.4	21.4	1.82		27	21.8	2.67		27.2	22.4	3.31		24.8	20.8	3.68
	57.0 (13.9)		30.6	28.6	1.07		24.8	23.4	1.27		28.2	26.2	1.63		23	23	1.81		25.4	23.8	2.68		25.8	24.2	3.3		23.6	22.2	3.66
293VAN048 Minimum Demand																													
75 (23.9)	72.0 (22.2)	500	26	9.8	0.52	500	21	8	0.71	500	24.4	9.2	1.03	500	20.4	8.3	1.19	600	26.6	10.1	2.12	650	28.4	10.8	2.87	650	26.2	10	3.23
	67.0 (19.4)		23.4	12.6	0.58		18.9	10.3	0.76		22	11.8	1.07		18.4	10.7	1.22		24	12.9	2.15		25.6	13.8	2.87		23.6	13	3.22
	63.0 (17.2)††		21.6	14.8	0.63		17.3	12.1	0.78		20.2	13.9	1.09		16.8	12.6	1.24		22	15.1	2.15		23.6	16.2	2.87		21.8	15.4	3.22
	57.0 (13.9)		19	17.8	0.67		15.4	14.5	0.82		17.9	16.7	1.11		15	15	1.25		19.5	18.2	2.16		20.8	19.6	2.85		19.5	18.4	3.19
80 (26.7)	72.0 (22.2)	500	25.8	12.6	0.52	500	20.8	10.3	0.71	500	24.2	11.9	1.03	500	20.4	10.8	1.19	600	26.4	12.9	2.12	650	28.2	13.8	2.87	650	37.4	17.3	3.14
	67.0 (19.4)		23.2	15.4	0.58		18.7	12.6	0.75		21.8	14.5	1.07		18.3	13.2	1.22		23.8	15.7	2.14		25.6	16.9	2.88		23.6	16	3.23
	63.0 (17.2)††		21.4	17.6	0.62		17.3	14.4	0.79		20.2	16.6	1.1		16.8	15.1	1.24		22	17.8	2.15		23.6	19.2	2.88		21.6	18.4	3.2
	57.0 (13.9)		20.2	19	0.64		16.4	15.4	0.8		19.1	17.8	1.1		16	16	1.25		20.6	19.4	2.15		22.2	20.8	2.88		20.8	19.5	3.21

Manufacturer reserves the right to change, at any time, specifications and designs without notice and without obligations.

Detailed Cooling Capacities# - Comfort + Dehumidify Mode (Continued)

EVAPORATOR AIR °F (°C)		CONDENSER ENTERING AIR TEMPERATURES °F (°C)																											
		65.0 (18.3)				75.0 (23.9)				85.0 (29.4)				95.0 (35.0)				105.0 (40.6)				115.0 (46.1)				125.0 (51.7)			
EDB	EWB	ID SCFM	Capacity MBtuh† Total	Capacity MBtuh† Sens‡	Total Sys. KW**	ID SCFM	Capacity MBtuh† Total	Capacity MBtuh† Sens‡	Total Sys. KW**	ID SCFM	Capacity MBtuh† Total	Capacity MBtuh† Sens‡	Total Sys. KW**	ID SCFM	Capacity MBtuh† Total	Capacity MBtuh† Sens‡	Total Sys. KW**	ID SCFM	Capacity MBtuh† Total	Capacity MBtuh† Sens‡	Total Sys. KW**	ID SCFM	Capacity MBtuh† Total	Capacity MBtuh† Sens‡	Total Sys. KW**	ID SCFM	Capacity MBtuh† Total	Capacity MBtuh† Sens‡	Total Sys. KW**
293VAN060 Maximum Demand																													
75 (23.9)	72.0 (22.2)	1400	67	26.8	3.16	1400	66	26.4	3.36	1400	65	25.8	3.73	1300	60.5	23.8	4.04	1250	57.5	22.2	4.63	1125	53	19.8	5.19	1100	47.5	17.1	5.54
	67.0 (19.4)		60.5	33.8	3.19		59.5	33.4	3.37		58.5	32.8	3.71		55	30.4	4.04		52	28.6	4.59		48	25.2	5.14		43	22	5.47
	63.0 (17.2)††		56	39	3.23		55	39	3.39		54	38.5	3.7		50.5	35.6	4		48	33.4	4.57		44	29.4	5.08		39.5	25.8	5.41
	57.0 (13.9)		50	47	3.26		49	47	3.4		48	46.5	3.68		45	43	3.96		42.5	40.5	4.49		39	35.6	5		35	31.2	5.32
80 (26.7)	72.0 (22.2)	1400	67	33.8	3.17	1400	66	33.4	3.37	1400	64.5	33	3.71	1300	60.5	30.6	4.05	1250	57.5	28.6	4.64	1125	53	25.2	5.21	1100	47.5	22	5.55
	67.0 (19.4)		60.5	40.5	3.19		59.5	40.5	3.38		58.5	40	3.71		54.5	37	4.01		52	34.8	4.6		47.5	30.6	5.11		43	26.8	5.48
	63.0 (17.2)††		56	46	3.23		55	46	3.39		54	45.5	3.7		50.5	42	4		48	39.5	4.57		44	34.8	5.08		39.5	30.6	5.41
	57.0 (13.9)		51.5	51.5	3.24		51	51	3.4		50.5	50	3.69		47.5	46.5	3.99		45	43.5	4.53		41	38.5	5.02		37.2	33.4	5.38
293VAN060 Intermediate Demand																													
75 (23.9)	72.0 (22.2)	850	40.5	16.4	1.6	850	40	16.1	1.74	850	40	16.1	2.02	820	38.5	15.3	2.38	750	33.8	13.1	2.57	710	35.6	13.3	3.47	700	31.8	11.5	3.76
	67.0 (19.4)		36.6	20.4	1.63		35.8	20.2	1.75		36	20.4	2.04		34.8	19.4	2.41		30.2	16.8	2.57		32	16.7	3.46		28.6	14.5	3.72
	63.0 (17.2)††		33.6	23.8	1.65		33	23.6	1.78		33.2	23.6	2.07		31.8	22.6	2.41		27.8	19.7	2.59		29.2	19.3	3.43		26.2	16.9	3.7
	57.0 (13.9)		29.8	28.4	1.67		29.2	28.4	1.8		29.2	28.6	2.07		28.2	27.4	2.42		24.6	23.6	2.59		25.6	23.2	3.4		23	20.4	3.65
80 (26.7)	72.0 (22.2)	850	40.5	20.6	1.6	850	39.5	20.4	1.72	850	40	20.4	2.02	820	38.5	19.5	2.39	750	33.6	16.9	2.56	710	30	14.9	2.85	700	31.6	14.6	3.75
	67.0 (19.4)		36.4	24.6	1.63		35.8	24.6	1.76		36	24.6	2.05		34.6	23.6	2.4		29.4	20.2	2.5		31.8	20.2	3.45		28.6	17.6	3.74
	63.0 (17.2)††		33.6	27.8	1.65		32.8	27.8	1.77		33	28	2.06		31.8	26.8	2.41		27.6	23.4	2.58		24.8	20.8	2.88		22.8	18.6	3.21
	57.0 (13.9)		31	31	1.67		30.6	30.6	1.79		30.8	30.6	2.07		29.8	29.2	2.41		26.2	25.2	2.58		23.6	22	2.86		21.8	19.6	3.19
293VAN060 Minimum Demand																													
75 (23.9)	72.0 (22.2)	575	26.6	10.8	0.98	575	26	10.6	1.03	575	26.6	10.7	1.26	575	26.6	10.5	1.61	500	20.8	8.2	1.62	500	26.2	9.9	2.7	500	23.6	8.6	2.95
	67.0 (19.4)		24	13.6	1.02		23.4	13.4	1.07		23.8	13.5	1.29		23.8	13.4	1.64		18.6	10.6	1.66		23.6	12.2	2.73		21.2	10.7	2.96
	63.0 (17.2)††		22.2	15.8	1.04		21.6	15.7	1.1		21.8	15.8	1.32		21.8	15.6	1.66		17	12.5	1.68		21.4	14	2.7		19.3	12.3	2.94
	57.0 (13.9)		19.5	19	1.07		19	18.9	1.13		19.1	19	1.34		19.1	18.7	1.68		15.3	14.7	1.7		18.7	16.6	2.7		16.9	14.8	2.94
80 (26.7)	72.0 (22.2)	575	26.6	13.6	0.98	575	26	13.5	1.04	575	26.4	13.6	1.25	575	26.4	13.5	1.6	500	20.8	10.7	1.63	500	26.2	12.3	2.71	500	23.6	10.8	2.96
	67.0 (19.4)		24	16.4	1.02		23.4	16.3	1.08		23.8	16.5	1.3		23.6	16.3	1.63		18.6	13.1	1.66		23.4	14.6	2.71		21.2	12.9	2.97
	63.0 (17.2)††		22	18.6	1.04		21.4	18.5	1.1		21.8	18.7	1.32		21.6	18.6	1.65		17	15	1.69		21.4	16.4	2.71		19.3	14.5	2.95
	57.0 (13.9)		20.4	20.4	1.05		20.2	20.2	1.12		20.4	20.2	1.33		20.4	20	1.66		16.4	15.7	1.69		19.5	18.2	2.71		17.8	15.9	2.95

Detailed cooling capacities are based on indoor and outdoor unit at the same elevation per AHRI standard 210/240-2008. If additional tubing length and/or indoor unit is located above outdoor unit, a slight variation in capacity may occur

† Total and sensible capacities are net capacities. Blower motor heat has been subtracted.

‡ Sensible capacities shown are based on 80°F (27°C) entering air at the indoor coil. For sensible capacities at other than 80°F (27°C), deduct 835 Btuh (245 kW) per 1000 CFM (480 L/S) of indoor coil air for each degree below 80°F (27°C), or add 835 Btuh (245 kW) per 1000 CFM (480 L/S) of indoor coil air per degree above 80°F (27°C).

** System kw is total of indoor and outdoor unit kilowatts.

Detailed cooling capacities are based on indoor and outdoor unit at the same elevation per AHRI standard 210/240-08. If additional tubing length and/or indoor unit is located above outdoor unit, a slight variation in capacity may occur.

NOTE: When the required data falls between the published data, interpolation may be performed. Extrapolation is not an acceptable practice.

EDB — Entering Dry Bulb

EWB — Entering Wet Bulb

Manufacturer reserves the right to change, at any time, specifications and designs without notice and without obligations.

Detailed Cooling Capacities# - Cooling Efficiency Mode

EVAPORATOR AIR °F (°C)		CONDENSER ENTERING AIR TEMPERATURES °F (°C)																											
		65.0 (18.3)				75.0 (23.9)				85.0 (29.4)				95.0 (35.0)				105.0 (40.6)				115.0 (46.1)				125.0 (51.7)			
EDB	EWB	ID SCFM	Capacity MBtuh†		Total Sys. KW**	ID SCFM	Capacity MBtuh†		Total Sys. KW**	ID SCFM	Capacity MBtuh†		Total Sys. KW**	ID SCFM	Capacity MBtuh†		Total Sys. KW**	ID SCFM	Capacity MBtuh†		Total Sys. KW**	ID SCFM	Capacity MBtuh†		Total Sys. KW**	ID SCFM	Capacity MBtuh†		Total Sys. KW**
			Total	Sens‡			Total	Sens‡			Total	Sens‡			Total	Sens‡			Total	Sens‡			Total	Sens‡			Total	Sens‡	
293VAN024 Maximum Demand																													
75 (23.9)	72.0 (22.2)	700	28.2	10.9	0.9	800	28.4	11.2	1.07	900	27	10.6	1.35	900	24.8	9.5	1.71	900	22.6	8.4	2.2	900	20.8	7.6	2.49	900	19.7	7.2	2.41
	67.0 (19.4)		25.4	14.1	0.97		25.6	14.9	1.12		24.4	14.7	1.4		22.4	13.3	1.74		20.4	11.9	2.23		18.7	11.1	2.5		17.8	10.7	2.42
	63.0 (17.2)††		23.4	16.6	1.02		23.6	17.9	1.16		22.6	17.9	1.43		20.6	16.3	1.76		18.8	14.6	2.25		17.3	13.7	2.51		16.5	13.3	2.41
	57.0 (13.9)		21	20.2	1.07		21.8	21.2	1.19		21.4	20.4	1.45		19.7	18.2	1.77		18.1	16.1	2.25		16.9	14.7	2.51		16.2	13.9	2.41
80 (26.7)	72.0 (22.2)	700	28	14.2	0.9	800	28.4	15	1.07	900	27	14.7	1.35	900	24.8	13.3	1.71	900	22.6	11.9	2.2	900	20.8	11.1	2.49	900	19.6	10.7	2.41
	67.0 (19.4)		25.4	17.3	0.97		25.6	18.7	1.12		24.4	18.8	1.39		23.2	18.7	1.69		20.4	15.4	2.23		18.8	14.4	2.51		17.8	14.1	2.41
	63.0 (17.2)††		23.4	19.8	1.01		23.8	21.6	1.16		23.2	20.8	1.41		21.4	19.1	1.76		19.5	17.3	2.24		18.1	15.8	2.5		17.5	15	2.42
	57.0 (13.9)		22.2	21.6	1.04		23.2	22.6	1.16		22.8	21.8	1.42		21	19.5	1.75		19.4	17.2	2.24		18.1	15.8	2.51		17.4	14.9	2.41
293VAN024 Intermediate Demand																													
75 (23.9)	72.0 (22.2)	500	15.2	6.1	0.31	500	14.8	6	0.4	500	13.7	5.6	0.53	600	13	5.3	0.77	630	13.9	5.3	1.19	630	13.6	5.1	1.5	630	12.7	4.8	1.49
	67.0 (19.4)		13.6	8.4	0.36		13.2	8.4	0.44		12.3	7.8	0.56		11.6	7.8	0.8		12.4	7.8	1.21		12.1	7.5	1.51		11.4	7.3	1.51
	63.0 (17.2)††		12.5	10.1	0.39		12.1	10.2	0.46		11.2	9.6	0.58		10.7	9.7	0.81		11.4	9.7	1.22		11.2	9.4	1.52		10.5	9	1.5
	57.0 (13.9)		11.8	11.4	0.41		11.6	11.3	0.48		10.8	10.3	0.59		10.6	9.8	0.81		11.3	10	1.23		11.1	9.6	1.53		10.5	9	1.51
80 (26.7)	72.0 (22.2)	500	15.2	8.4	0.31	500	14.8	8.4	0.4	500	13.7	7.9	0.53	600	12.9	7.9	0.76	630	13.8	7.9	1.19	630	13.5	7.6	1.5	630	12.7	7.3	1.5
	67.0 (19.4)		13.6	10.7	0.36		13.2	10.7	0.44		12.3	10.1	0.56		11.7	10.3	0.79		12.4	10.3	1.2		12.2	9.9	1.52		11.5	9.6	1.51
	63.0 (17.2)††		12.8	12	0.38		12.5	12.1	0.46		11.7	11.2	0.57		11.5	10.7	0.79		12.2	10.8	1.21		11.9	10.4	1.51		11.4	9.8	1.51
	57.0 (13.9)		12.7	12.2	0.39		12.4	12.1	0.45		11.7	11.1	0.57		11.5	10.6	0.79		12.2	10.8	1.22		11.9	10.4	1.51		11.4	9.8	1.51
293VAN024 Minimum Demand																													
75 (23.9)	72.0 (22.2)	400	8.1	3.5	0.14	400	7.7	3.4	0.2	400	6.9	3.1	0.28	450	6.5	3	0.42	500	9.5	3.8	0.82	500	9.9	3.8	1.1	500	9.2	3.6	1.12
	67.0 (19.4)		7.2	5.3	0.17		6.8	5.3	0.22		6.1	4.9	0.3		5.7	4.9	0.44		8.4	5.8	0.84		8.8	5.7	1.13		8.1	5.5	1.13
	63.0 (17.2)††		6.7	6.5	0.19		6.4	6.2	0.23		5.8	5.6	0.3		5.6	5.2	0.44		7.9	7	0.86		8.2	6.8	1.13		7.6	6.5	1.13
	57.0 (13.9)		6.7	6.5	0.19		6.4	6.2	0.23		5.8	5.6	0.3		5.6	5.2	0.44		7.9	7	0.86		8.1	7.1	1.13		7.6	6.5	1.13
80 (26.7)	72.0 (22.2)	400	8	5.4	0.14	400	7.6	5.4	0.2	400	6.8	5	0.27	450	6.4	4.9	0.42	500	9.4	5.8	0.81	500	9.8	5.8	1.1	500	9.1	5.6	1.12
	67.0 (19.4)		7.6	6	0.15		7	6.8	0.21		6.4	6.1	0.29		6.1	5.7	0.42		8.6	7.5	0.84		8.9	7.6	1.12		8.3	7.1	1.12
	63.0 (17.2)††		7.3	7	0.16		7	6.8	0.21		6.4	6.1	0.29		6.1	5.7	0.42		8.5	7.6	0.83		8.8	7.7	1.12		8.3	7.1	1.12
	57.0 (13.9)		7.3	7	0.16		7	6.8	0.21		6.4	6.1	0.29		6.1	5.7	0.42		8.5	7.6	0.83		8.8	7.7	1.12		8.3	7.1	1.12

Manufacturer reserves the right to change, at any time, specifications and designs without notice and without obligations.

Detailed Cooling Capacities# - Cooling Efficiency Mode (Continued)

EVAPORATOR AIR °F (°C)		CONDENSER ENTERING AIR TEMPERATURES °F (°C)																											
		65.0 (18.3)				75.0 (23.9)				85.0 (29.4)				95.0 (35.0)				105.0 (40.6)				115.0 (46.1)				125.0 (51.7)			
EDB	EWB	ID SCFM	Capacity MBtuh†		Total Sys. KW**	ID SCFM	Capacity MBtuh†		Total Sys. KW**	ID SCFM	Capacity MBtuh†		Total Sys. KW**	ID SCFM	Capacity MBtuh†		Total Sys. KW**	ID SCFM	Capacity MBtuh†		Total Sys. KW**	ID SCFM	Capacity MBtuh†		Total Sys. KW**	ID SCFM	Capacity MBtuh†		Total Sys. KW**
			Total	Sens‡			Total	Sens‡			Total	Sens‡			Total	Sens‡			Total	Sens‡			Total	Sens‡			Total	Sens‡	
293VAN036 Maximum Demand																													
75 (23.9)	72.0 (22.2)	1200	46.5	17.7	1.99	1200	42	16.6	2.24	1200	42	16.5	2.34	1200	38.5	15.4	2.65	1200	36	14.4	3.69	1200	33.8	13.6	4.19	1200	31.4	12.8	4.69
	67.0 (19.4)		42	23.6	2.06		38	22.4	2.31		37.8	22.4	2.38		34.6	21.2	2.67		32.4	20.2	3.7		30.4	19.4	4.19		28.4	18.5	4.69
	63.0 (17.2)††		38.5	28.2	2.1		35	26.8	2.35		34.8	27.2	2.41		32	25.8	2.7		29.8	24.6	3.7		28	23.8	4.19		26.2	23	4.66
	57.0 (13.9)		35.2	33.8	2.15		32.2	31.8	2.39		32.2	31.8	2.42		29.8	29.8	2.69		28.2	27.8	3.71		26.8	26.4	4.19		25.2	25	4.63
80 (26.7)	72.0 (22.2)	1200	46	23.6	1.97	1200	42	22.4	2.24	1200	41.5	22.6	2.32	1200	38.5	21.2	2.66	1200	35.8	20.2	3.68	1200	33.6	19.4	4.18	1200	31.2	18.6	4.67
	67.0 (19.4)		42	29.4	2.07		37.8	28	2.3		37.6	28.4	2.37		34.6	27	2.68		32.4	25.8	3.71		31.4	23	3.47		26	16.6	3.49
	63.0 (17.2)††		39	34	2.12		35.2	32.4	2.35		35	33	2.41		32.2	31.4	2.69		30.4	29.6	3.71		28.8	28.4	4.2		27.2	26.8	4.67
	57.0 (13.9)		37.6	36	2.12		34.2	33.8	2.35		34.4	33.8	2.41		32	31.8	2.7		30.2	29.8	3.71		28.6	28.4	4.18		27	26.8	4.66
293VAN036 Intermediate Demand																													
75 (23.9)	72.0 (22.2)	850	24	9.7	0.6	800	21.2	8.9	0.76	700	20.6	8.5	0.84	750	19.9	8.4	1.1	850	19.4	8.3	1.7	850	20.8	8.8	2.28	850	19.1	8.2	2.59
	67.0 (19.4)		21.4	13.8	0.67		19	12.7	0.82		18.4	12	0.89		17.8	12	1.14		17.4	12.4	1.74		18.7	12.8	2.31		17.1	12.3	2.6
	63.0 (17.2)††		19.8	17.1	0.72		17.5	15.6	0.86		16.9	14.7	0.92		16.3	14.8	1.16		16	15.4	1.76		17.2	16	2.32		15.8	15.3	2.61
	57.0 (13.9)		19.1	18.4	0.73		17	16.8	0.88		16.2	16	0.93		15.8	15.8	1.16		15.9	15.7	1.76		16.8	16.7	2.31		15.7	15.5	2.6
80 (26.7)	72.0 (22.2)	850	23.8	13.9	0.6	800	21.2	12.7	0.76	700	20.6	12	0.85	750	19.8	12.1	1.1	850	19.3	12.4	1.7	850	20.8	12.9	2.3	850	18.9	12.3	2.58
	67.0 (19.4)		21.4	18	0.66		19	16.5	0.82		18.4	15.4	0.89		17.7	15.6	1.13		17.4	16.4	1.73		18.7	16.9	2.31		17.1	16.3	2.59
	63.0 (17.2)††		20.6	19.8	0.69		18.3	18.1	0.84		17.5	17.2	0.91		17.1	17	1.15		17.2	17	1.74		18.2	18	2.32		16.9	16.7	2.59
	57.0 (13.9)		20.6	19.7	0.69		18.2	18	0.84		17.4	17.2	0.91		17	17	1.14		17.1	16.9	1.74		18.1	17.9	2.31		16.9	16.7	2.6
293VAN036 Minimum Demand																													
75 (23.9)	72.0 (22.2)	550	11.3	5	0.18	550	9.8	4.5	0.3	550	9.3	4.4	0.38	675	9.4	4.8	0.56	675	10.1	4.9	0.92	675	14.2	6.3	1.55	675	12.9	5.8	1.78
	67.0 (19.4)		10	7.6	0.23		8.7	7.1	0.34		8.2	7.1	0.4		8.3	8	0.58		8.9	8.1	0.95		12.6	9.5	1.57		11.4	9	1.78
	63.0 (17.2)††		9.5	9.1	0.25		8.3	8.2	0.35		8	7.8	0.41		8.2	8.2	0.58		8.7	8.6	0.95		11.7	11.6	1.59		10.8	10.6	1.79
	57.0 (13.9)		9.4	9.1	0.25		8.3	8.2	0.35		7.9	7.8	0.41		8.2	8.2	0.58		8.7	8.6	0.95		11.7	11.6	1.59		10.7	10.6	1.78
80 (26.7)	72.0 (22.2)	550	11.2	7.7	0.18	550	9.7	7.2	0.3	550	9.2	7.2	0.37	675	9.3	8.1	0.55	675	9.9	8.2	0.91	675	14.1	9.5	1.55	675	12.8	9.1	1.78
	67.0 (19.4)		10.3	9.8	0.22		9	8.9	0.32		8.7	8.6	0.39		9	9	0.56		9.5	9.4	0.92		12.8	12.4	1.58		11.7	11.6	1.78
	63.0 (17.2)††		10.2	9.8	0.22		9	8.9	0.32		8.7	8.6	0.39		9	9	0.56		9.5	9.4	0.93		12.7	12.6	1.57		11.7	11.5	1.78
	57.0 (13.9)		10.2	9.8	0.22		9	8.9	0.32		8.7	8.6	0.39		9	9	0.56		9.5	9.4	0.93		12.7	12.5	1.58		11.7	11.5	1.79

Manufacturer reserves the right to change, at any time, specifications and designs without notice and without obligations.

Detailed Cooling Capacities# - Cooling Efficiency Mode (Continued)

EVAPORATOR AIR °F (°C)		CONDENSER ENTERING AIR TEMPERATURES °F (°C)																										
		65.0 (18.3)				75.0 (23.9)				85.0 (29.4)				95.0 (35.0)				105.0 (40.6)				115.0 (46.1)				125.0 (51.7)			
EDB	EWB	ID SCFM	Capacity MBtuh†		Total Sys. KW**	ID SCFM	Capacity MBtuh†		Total Sys. KW**	ID SCFM	Capacity MBtuh†		Total Sys. KW**	ID SCFM	Capacity MBtuh†		Total Sys. KW**	ID SCFM	Capacity MBtuh†		Total Sys. KW**	ID SCFM	Capacity MBtuh†		Total Sys. KW**	ID SCFM	Capacity MBtuh†		Total Sys. KW**
			Total	Sens‡			Total	Sens‡			Total	Sens‡			Total	Sens‡			Total	Sens‡			Total	Sens‡			Total	Sens‡	
293VAN048 Maximum Demand																													
75 (23.9)	72.0 (22.2)	1425	69	25.8	2.19	1575	55.5	21	2.56	1650	61.5	23	3.22	1680	50	20.2	3.49	1650	46.5	17.9	4.12	1650	43	16.8	4.63	1650	39	15.6	5.13
	67.0 (19.4)		62.5	34	2.27		50.5	28.4	2.65		56	32	3.29		45.5	28.6	3.55		42	25.6	4.12		39	24.4	4.63		35.4	23.2	5.1
	63.0 (17.2)††		58	40.5	2.33		46.5	34.2	2.68		51.5	39	3.31		42	35	3.57		39	31.6	4.13		36	30.4	4.59		33	29.2	5.09
	57.0 (13.9)		53	48.5	2.4		43	40.5	2.72		48.5	45	3.34		40	39.5	3.58		37.4	35.2	4.13		35	33	4.59		32.4	30.6	5.08
80 (26.7)	72.0 (22.2)	1425	69	33.8	2.19	1575	55	28.2	2.55	1650	61	31.8	3.21	1680	49.5	28.4	3.48	1650	46	25.6	4.1	1650	42.5	24.4	4.62	1650	39	23.2	5.17
	67.0 (19.4)		62.5	42	2.28		50	35.6	2.63		55.5	40.5	3.27		47.5	37.6	3.59		42	33.2	4.13		38.5	32	4.58		35.2	35	4.92
	63.0 (17.2)††		58	48	2.33		46.5	41.5	2.67		52	47.5	3.31		43	41.5	3.56		40	37.6	4.13		37.4	35.2	4.61		34.6	32.6	5.1
	57.0 (13.9)		55.5	52	2.36		45.5	43	2.68		51.5	48	3.31		42.5	42.5	3.55		40	37.4	4.14		37.4	35.2	4.62		34.6	32.6	5.1
293VAN048 Intermediate Demand																													
75 (23.9)	72.0 (22.2)	1050	36.4	14	0.75	1000	28.6	11.1	0.94	990	31.8	12.7	1.28	1030	28.4	11.9	1.61	1150	31.6	12.5	2.44	1280	34.8	13.7	3.45	1350	31.8	12.9	3.9
	67.0 (19.4)		33	19.1	0.83		25.8	15.3	1		28.6	18.7	1.34		25.6	16.7	1.65		28.4	17.7	2.46		31.6	19.7	3.47		28.8	19.2	3.89
	63.0 (17.2)††		30.4	23	0.88		23.8	18.6	1.04		26.4	23.2	1.37		23.6	20.4	1.68		26.4	21.8	2.49		29.2	24.4	3.47		26.8	24.2	3.9
	57.0 (13.9)		28.4	26.6	0.92		22.4	21	1.07		26	24.2	1.38		22.6	22.6	1.69		25.4	23.8	2.49		28.2	26.6	3.46		26.4	24.8	3.88
80 (26.7)	72.0 (22.2)	1050	36.2	19	0.75	1000	28.4	15.3	0.94	990	31.4	18.7	1.28	1030	28.2	16.7	1.62	1150	31.2	17.7	2.43	1280	34.4	19.7	3.44	1350	47.5	24.4	3.78
	67.0 (19.4)		32.8	24	0.83		25.6	19.5	1		28.6	24.4	1.34		25.4	21.4	1.65		28.4	23	2.47		31.4	25.6	3.47		28.6	25.4	3.89
	63.0 (17.2)††		30.4	28	0.87		24	22.6	1.04		28	26	1.35		24.2	24.2	1.67		27.2	25.6	2.48		30.2	28.4	3.47		28.2	26.6	3.88
	57.0 (13.9)		30.2	28.2	0.88		23.8	22.4	1.03		27.8	26	1.35		24.2	24	1.68		27	25.4	2.47		30	28.4	3.46		28.2	26.6	3.9
293VAN048 Minimum Demand																													
75 (23.9)	72.0 (22.2)	615	20.6	8.2	0.33	615	16.1	6.6	0.46	660	17.2	7.1	0.64	700	17.7	7.6	0.96	900	24.6	9.8	1.83	1100	30.6	12.1	2.96	1200	28	11.4	3.37
	67.0 (19.4)		18.6	11.7	0.39		14.4	9.7	0.5		15.4	10.6	0.68		15.8	11	0.99		22	14	1.85		27.6	17.3	2.97		38	21.6	3.29
	63.0 (17.2)††		17.1	14.4	0.43		13.3	12.1	0.53		14.2	13.2	0.7		14.6	13.7	1.02		20.4	17.3	1.87		25.6	21.4	2.98		35.4	26	3.28
	57.0 (13.9)		16.5	15.5	0.44		13.1	12.3	0.54		14.2	13.2	0.7		14.3	14.2	1.02		19.7	18.5	1.88		24.6	23.2	2.97		32.6	30.6	3.27
80 (26.7)	72.0 (22.2)	615	20.4	11.7	0.33	615	15.9	9.7	0.46	660	17	10.7	0.63	700	17.5	11.1	0.95	900	24.2	14	1.81	1100	30.4	17.2	2.96	1200	27.8	17	3.37
	67.0 (19.4)		18.5	15.1	0.39		14.3	12.7	0.5		15.5	13.4	0.66		15.7	14.5	0.99		22	18.1	1.85		27.6	22.4	2.98		25.2	22.6	3.36
	63.0 (17.2)††		17.7	16.6	0.41		14.1	13.3	0.51		15.3	14.2	0.67		15.4	15.3	1		21.2	19.9	1.87		26.4	24.8	2.98		25	23.4	3.38
	57.0 (13.9)		17.7	16.6	0.41		14.1	13.3	0.51		15.3	14.2	0.67		15.4	15.3	1		21	19.8	1.85		26.4	24.8	2.99		24.8	23.4	3.36

Manufacturer reserves the right to change, at any time, specifications and designs without notice and without obligations.

Detailed Cooling Capacities# - Cooling Efficiency Mode (Continued)

EVAPORATOR AIR °F (°C)		CONDENSER ENTERING AIR TEMPERATURES °F (°C)																											
		65.0 (18.3)				75.0 (23.9)				85.0 (29.4)				95.0 (35.0)				105.0 (40.6)				115.0 (46.1)				125.0 (51.7)			
EDB	EWB	ID SCFM	Capacity MBtuh†		Total Sys. KW**	ID SCFM	Capacity MBtuh†		Total Sys. KW**	ID SCFM	Capacity MBtuh†		Total Sys. KW**	ID SCFM	Capacity MBtuh†		Total Sys. KW**	ID SCFM	Capacity MBtuh†		Total Sys. KW**	ID SCFM	Capacity MBtuh†		Total Sys. KW**	ID SCFM	Capacity MBtuh†		Total Sys. KW**
			Total	Sens‡			Total	Sens‡			Total	Sens‡			Total	Sens‡			Total	Sens‡			Total	Sens‡			Total	Sens‡	
293VAN060 Maximum Demand																													
75 (23.9)	72.0 (22.2)	1625	69	27.4	3.34	1725	68	27	3.59	1725	67	26.4	3.96	1725	65	25.4	4.5	1725	62	23.8	5.15	1725	57.5	21.6	5.8	1725	50	18.2	5.95
	67.0 (19.4)		62	35.4	3.35		61.5	35.6	3.62		60.5	35.2	3.96		58.5	34.2	4.47		56	32.4	5.12		52	29.8	5.73		45	25.8	5.84
	63.0 (17.2)††		57.5	41.5	3.4		56.5	42.5	3.62		55.5	42	3.94		54	41	4.46		51.5	39.5	5.07		48	36.4	5.69		41.5	31.8	5.8
	57.0 (13.9)		51.5	50.5	3.42		51	51	3.63		50.5	50.5	3.93		49.5	48.5	4.43		48	46	5.06		45	42	5.64		39.5	35.6	5.76
80 (26.7)	72.0 (22.2)	1625	69	35.4	3.35	1725	68	35.8	3.6	1725	66	35.2	3.91	1725	64.5	34.2	4.48	1725	61.5	32.6	5.13	1725	57	29.8	5.77	1725	49.5	25.8	5.92
	67.0 (19.4)		62	43	3.36		61	44	3.59		60	44	3.94		58.5	43	4.46		56	41	5.13		52	38	5.74		45.5	33.2	5.85
	63.0 (17.2)††		57.5	49.5	3.39		56.5	51	3.61		55.5	50.5	3.93		54.5	49.5	4.48		52	47.5	5.1		48.5	44.5	5.71		42.5	38	5.84
	57.0 (13.9)		54	54	3.39		54.5	54.5	3.63		54	53.5	3.95		53	52	4.46		51	49	5.07		48	44.5	5.69		42.5	38	5.84
293VAN060 Intermediate Demand																													
75 (23.9)	72.0 (22.2)	1000	37	15.1	1.3	1000	36.2	14.8	1.45	1000	35.6	14.5	1.65	1100	35.8	14.6	2.07	1260	36.4	14.7	2.67	1260	40	15.4	3.68	1260	34.6	13.1	3.88
	67.0 (19.4)		33.4	20	1.34		32.6	19.8	1.49		32	19.5	1.69		32.2	20.2	2.11		32.6	21	2.7		36	21.4	3.67		31.2	18.6	3.86
	63.0 (17.2)††		30.6	23.8	1.37		30	23.6	1.52		29.4	23.4	1.72		29.4	24.4	2.13		30	26	2.72		33.2	26.2	3.68		28.8	23	3.85
	57.0 (13.9)		28	28	1.4		27.6	27.6	1.54		27.2	27	1.74		28	27.4	2.15		29	28	2.72		31.4	29.2	3.66		27.8	25	3.85
80 (26.7)	72.0 (22.2)	1000	36.8	20	1.3	1000	36	19.9	1.44	1000	35.4	19.6	1.65	1100	35.6	20.2	2.07	1260	36.2	21.2	2.67	1260	40	21.6	3.69	1260	34.4	18.6	3.88
	67.0 (19.4)		33.2	24.8	1.34		32.4	24.8	1.48		31.8	24.6	1.69		32	25.8	2.11		32.6	27.4	2.7		35.8	27.4	3.66		31.2	24.2	3.87
	63.0 (17.2)††		30.8	28.6	1.37		30	28.6	1.51		29.4	28.6	1.71		30	29.4	2.13		31.2	30	2.71		33.6	31.4	3.66		29.8	26.8	3.86
	57.0 (13.9)		29.8	29.8	1.37		29.4	29.4	1.52		29	29	1.71		30	29.4	2.13		31.2	30	2.71		33.6	31.4	3.67		29.8	26.8	3.87
293VAN060 Minimum Demand																													
75 (23.9)	72.0 (22.2)	875	21.2	9.2	0.46	875	20.2	8.9	0.57	875	19.2	8.6	0.75	1000	19.4	8.8	1.08	1000	21.6	9.4	1.59	1000	30	11.7	2.74	1000	26.4	10.1	3.03
	67.0 (19.4)		19.3	13.6	0.53		18.3	13.4	0.64		17.3	13.1	0.8		17.4	13.9	1.13		19.3	14.4	1.64		26.8	16.5	2.75		23.8	14.5	3.04
	63.0 (17.2)††		18	17	0.58		17	16.8	0.68		16.2	16.1	0.84		16.6	16.3	1.14		18.2	17.5	1.66		24.6	20.2	2.77		21.8	17.9	3.04
	57.0 (13.9)		17.7	17.7	0.59		16.9	16.9	0.68		16.2	16.1	0.84		16.6	16.3	1.15		18.2	17.4	1.67		23.6	22	2.77		21.2	19.1	3.04
80 (26.7)	72.0 (22.2)	875	21	13.5	0.45	875	19.9	13.3	0.56	875	18.9	13	0.74	1000	19.1	14	1.07	1000	21.4	14.4	1.59	1000	29.8	16.6	2.74	1000	26.2	14.5	3.03
	67.0 (19.4)		19.2	17.8	0.53		18.3	17.7	0.63		17.5	16.6	0.79		17.9	17.5	1.11		19.6	18.8	1.63		26.8	21.4	2.76		23.6	18.9	3.03
	63.0 (17.2)††		18.8	18.8	0.54		18.1	18.1	0.64		17.4	17.3	0.8		17.9	17.5	1.11		19.6	18.8	1.63		25.4	23.8	2.77		22.8	20.4	3.04
	57.0 (13.9)		18.8	18.8	0.54		18.1	18.1	0.64		17.3	17.3	0.8		17.8	17.5	1.11		19.6	18.8	1.64		25.4	23.6	2.77		22.8	20.4	3.04

Detailed cooling capacities are based on indoor and outdoor unit at the same elevation per AHRI standard 210/240-2008. If additional tubing length and/or indoor unit is located above outdoor unit, a slight variation in capacity may occur

† Total and sensible capacities are net capacities. Blower motor heat has been subtracted.

‡ Sensible capacities shown are based on 80°F (27°C) entering air at the indoor coil. For sensible capacities at other than 80°F (27°C), deduct 835 Btuh (245 kW) per 1000 CFM (480 L/S) of indoor coil air for each degree below 80°F (27°C), or add 835 Btuh (245 kW) per 1000 CFM (480 L/S) of indoor coil air per degree above 80°F (27°C).

** System kw is total of indoor and outdoor unit kilowatts.

Detailed cooling capacities are based on indoor and outdoor unit at the same elevation per AHRI standard 210/240-08. If additional tubing length and/or indoor unit is located above outdoor unit, a slight variation in capacity may occur.

NOTE: When the required data falls between the published data, interpolation may be performed. Extrapolation is not an acceptable practice.

EDB — Entering Dry Bulb

EWB — Entering Wet Bulb

Manufacturer reserves the right to change, at any time, specifications and designs without notice and without obligations.

Heat Pump Heating Performance - Comfort Mode

INDOOR AIR °F (°C)	OUTDOOR ENTERING AIR TEMPERATURES °F (°C)																																			
	-3 (-19.4)				7 (-13.9)				17 (-8.3)				27 (-2.8)				37 (2.7)				47 (8.3)				57 (13.9)				67 (19.4)			
EDB	ID SCFM	Capacity MBtuh		Total Sys. KW**	ID SCFM	Capacity MBtuh		Total Sys. KW**	ID SCFM	Capacity MBtuh		Total Sys. KW**	ID SCFM	Capacity MBtuh		Total Sys. KW**	ID SCFM	Capacity MBtuh		Total Sys. KW**	ID SCFM	Capacity MBtuh		Total Sys. KW**	ID SCFM	Capacity MBtuh		Total Sys. KW**	ID SCFM	Capacity MBtuh		Total Sys. KW**
		Total	Sens‡			Total	Sens‡			Total	Sens‡			Total	Sens‡			Total	Sens‡			Total	Sens‡			Total	Sens‡			Total	Sens‡	
293VAN024 Maximum Demand																																				
65 (18.3)		15.5	14.5	2.6		19.8	18.2	2.66		22.2	20.2	2.41		26.4	23.4	2.4		28.2	25.6	2.16		25.9	25.9	1.71		23	23	1.19		22	22	0.95
70 (21.1)	625	15.4	14.4	2.65	650	19.7	18.2	2.7	685	22.2	20.2	2.5	700	26.4	23.4	2.5	700	28	25.6	2.25	665	25.8	25.8	1.82	615	22.8	22.8	1.28	600	21.6	21.6	1.02
75 (23.9)		15.4	14.3	2.69		19.7	18.1	2.73		22.1	20.1	2.6		26.2	23.2	2.61		28	25.4	2.36		25.8	25.8	1.94		22.6	22.6	1.36		21.4	21.4	1.09
293VAN024 Intermediate Demand																																				
65 (18.3)		8	7.4	1.23		10.2	9.3	1.24		11.6	10.6	1.12		12.6	11.2	0.96		13.8	12.6	0.87		14.2	14.2	0.79		14	14	0.65		14.4	14.4	0.57
70 (21.1)	340	7.9	7.3	1.27	350	10.1	9.3	1.29	360	11.5	10.5	1.17	365	12.5	11.1	1.02	390	13.7	12.4	0.93	410	14	14	0.84	405	13.8	13.8	0.69	400	14.2	14.2	0.62
75 (23.9)		7.8	7.2	1.3		10	9.2	1.33		11.4	10.4	1.22		12.4	11	1.07		13.5	12.3	0.97		13.8	13.8	0.89		13.6	13.6	0.74		14	14	0.66
293VAN024 Minimum Demand																																				
65 (18.3)		4.7	4.3	0.68		5.9	5.4	0.7		6.6	6	0.62		6.2	5.5	0.46		7.4	6.7	0.45		8.7	8.7	0.46		9.7	9.7	0.44		10.6	10.6	0.42
70 (21.1)	200	4.6	4.2	0.7	200	5.8	5.3	0.73	200	6.5	5.9	0.66	200	6.1	5.4	0.48	235	7.2	6.6	0.47	285	8.5	8.5	0.49	300	9.6	9.6	0.47	300	10.4	10.4	0.45
75 (23.9)		4.5	4.1	0.74		5.7	5.3	0.77		6.3	5.7	0.73		5.9	5.3	0.5		7.1	6.4	0.5		8.3	8.3	0.52		9.4	9.4	0.5		10.2	10.2	0.48
293VAN036 Maximum Demand																																				
65 (18.3)		23	21	2.98		29.2	26.8	3.51		32.2	29.4	3.35		37.8	33.6	3.34		41	37.2	3.18		35	35	2.44		36.8	36.8	2.21		40	40	2.09
70 (21.1)	720	22.8	21	3.09	750	29	26.8	3.63	780	32	29.2	3.5	1030	37.6	33.4	3.49	1170	40.5	37	3.32	1005	34.6	34.6	2.57	1015	36.4	36.4	2.35	1000	39.5	39.5	2.24
75 (23.9)		22.6	21	3.25		29	26.6	3.79		31.8	29	3.64		37.4	33.2	3.65		40.5	36.6	3.51		34.2	34.2	2.71		36	36	2.48		39.5	39.5	2.4
293VAN036 Intermediate Demand																																				
65 (18.3)		12.3	11.3	1.45		15.7	14.4	1.63		18.4	16.8	1.67		21.8	19.3	1.66		23.8	21.6	1.59		22.4	22.4	1.47		22.2	22.2	1.22		24	24	1.16
70 (21.1)	460	12.2	11.2	1.54	470	15.5	14.2	1.71	480	18.2	16.6	1.75	580	21.4	19.1	1.72	630	23.6	21.4	1.68	590	22	22	1.54	575	22	22	1.31	570	23.6	23.6	1.22
75 (23.9)		12	11	1.6		15.3	14	1.79		18	16.4	1.84		21.2	18.9	1.81		23.2	21.2	1.75		21.8	21.8	1.64		21.6	21.6	1.39		23.2	23.2	1.29
293VAN036 Minimum Demand																																				
65 (18.3)		7.8	7.1	0.96		9.9	9.1	1.05		12.3	11.2	1.14		14.2	12.6	1.11		15.6	14.2	1.1		16.1	16.1	1.13		15	15	0.88		15.6	15.6	0.77
70 (21.1)	325	7.6	7	1	325	9.7	8.9	1.09	325	12.1	11	1.2	350	14	12.4	1.17	360	15.4	14	1.16	375	15.9	15.9	1.19	350	14.8	14.8	0.94	350	15.4	15.4	0.83
75 (23.9)		7.4	6.8	1.04		9.5	8.8	1.14		11.9	10.8	1.25		13.8	12.2	1.23		15.2	13.8	1.22		15.6	15.6	1.25		14.6	14.6	1		15.1	15.1	0.89

Manufacturer reserves the right to change, at any time, specifications and designs without notice and without obligations.

Heat Pump Heating Performance - Comfort Mode (Continued)

INDOOR AIR °F (°C)	OUTDOOR ENTERING AIR TEMPERATURES °F (°C)																															
	-3 (-19.4)				7 (-13.9)				17 (-8.3)				27 (-2.8)				37 (2.7)				47 (8.3)				57 (13.9)				67 (19.4)			
EDB	ID SCFM	Capacity MBtuh		Total Sys. KW**	ID SCFM	Capacity MBtuh		Total Sys. KW**	ID SCFM	Capacity MBtuh		Total Sys. KW**	ID SCFM	Capacity MBtuh		Total Sys. KW**	ID SCFM	Capacity MBtuh		Total Sys. KW**	ID SCFM	Capacity MBtuh		Total Sys. KW**	ID SCFM	Capacity MBtuh		Total Sys. KW**	ID SCFM	Capacity MBtuh		Total Sys. KW**
		Total	Sens‡			Total	Sens‡			Total	Sens‡			Total	Sens‡			Total	Sens‡			Total	Sens‡			Total	Sens‡			Total	Sens‡	
293VAN048 Maximum Demand																																
65 (18.3)		31.4	29	3.93		39	35.8	4.72		43	39.5	4.2		50	44	4.26		56	51	4.61		53	53	4.11		58	58	4.15		62	62	4.23
70 (21.1)	1600	31.2	28.8	4.12	1605	39.5	36.2	4.71	1585	43	39	4.44	1490	49.5	44	4.45	1325	55.5	50.5	4.84	1400	52.5	52.5	4.32	1400	57.5	57.5	4.39	1400	61	61	4.45
75 (23.9)		31	28.6	4.29		39.5	36	4.91		40	36.4	4.51		49	43.5	4.66		55	50	5.04		52	52	4.54		57	57	4.61		60.5	60.5	4.69
293VAN048 Intermediate Demand																																
65 (18.3)		20.8	19.1	2.54		27.2	25	2.89		30.2	27.6	2.77		31.4	27.8	2.41		26.2	23.8	1.73		26.2	26.2	1.65		28.6	28.6	1.64		33.4	33.4	1.7
70 (21.1)	870	21	19.3	2.65	890	24.6	22.6	3.11	930	29.6	27	2.89	895	31	27.6	2.54	845	25.8	23.4	1.83	870	25.8	25.8	1.76	870	28.8	28.8	1.77	870	32.8	32.8	1.81
75 (23.9)		20.8	19.1	2.8		26.8	24.6	3.17		29.4	26.8	3.03		30.6	27.2	2.65		25.4	23	1.93		25.4	25.4	1.87		28.4	28.4	1.88		32.4	32.4	1.94
293VAN048 Minimum Demand																																
65 (18.3)		15.8	14.5	2.01		19.7	18.1	2.19		23.2	21.2	2.19		21.8	19.3	1.67		11.3	10.3	0.7		12.7	12.7	0.76		14.9	14.9	0.8		17.7	17.7	0.82
70 (21.1)	500	15.6	14.4	2.12	530	19.5	17.9	2.27	600	23	21	2.31	600	21.4	19.1	1.75	600	11.1	10.1	0.76	600	12.3	12.3	0.82	600	14.6	14.6	0.87	600	16.8	16.8	0.88
75 (23.9)		15.4	14.1	2.21		18.9	17.3	2.37		22.6	20.6	2.42		21.2	18.9	1.8		10.7	9.7	0.8		12	12	0.87		14.5	14.5	0.94		16.6	16.6	0.95
293VAN060 Maximum Demand																																
65 (18.3)		33	30.2	3.78		45.5	41.5	4.8		54	49.5	5.04		63.5	56.5	5.14		68	62	5.39		69	69	6.13		62.5	62.5	4.82		54	54	3.49
70 (21.1)	1400	32.6	30	3.95	1400	45	41.5	5	1460	53.5	49	5.23	1650	63	56	5.37	1645	68	61.5	5.69	1425	69	69	6.48	1415	62	62	5.08	1300	53.5	53.5	3.7
75 (23.9)		32.4	29.8	4.13		45	41.5	5.23		53.5	48.5	5.52		62.5	55.5	5.62		67	61	5.91		68	68	6.73		61	61	5.32		53	53	3.9
293VAN060 Intermediate Demand																																
65 (18.3)		24.4	22.4	2.77		31	28.6	3.09		34.6	31.6	2.98		37	32.8	2.7		35.8	32.6	2.51		37.4	37.4	2.95		35.4	35.4	2.51		34.8	34.8	2.14
70 (21.1)	800	24.2	22.2	2.91	800	30.8	28.2	3.27	850	34.2	31.2	3.13	920	36.6	32.6	2.84	915	35.4	32.2	2.65	855	37	37	3.12	875	35	35	2.66	830	34.4	34.4	2.29
75 (23.9)		23.8	22	3.03		30.4	28	3.43		34	31	3.3		36.2	32.2	2.98		35	31.8	2.8		36.6	36.6	3.29		34.6	34.6	2.83		34	34	2.44
293VAN060 Minimum Demand																																
65 (18.3)		20.2	18.7	2.47		24	22	2.57		24.8	22.6	2.27		23.8	21	1.85		19.2	17.5	1.37		20.4	20.4	1.57		21.8	21.8	1.54		24	24	1.52
70 (21.1)	500	20	18.4	2.59	500	23.6	21.8	2.68	550	24.4	22.2	2.37	550	23.4	20.8	1.95	550	18.9	17.2	1.47	570	20.2	20.2	1.7	600	21.6	21.6	1.67	600	23.8	23.8	1.66
75 (23.9)		19.8	18.2	2.71		23.4	21.6	2.83		24.2	22	2.5		23.2	20.6	2.07		18.7	17	1.58		20	20	1.83		21.4	21.4	1.81		23.6	23.6	1.8

Manufacturer reserves the right to change, at any time, specifications and designs without notice and without obligations.

Heat Pump Heating Performance - Efficiency Mode

INDOOR AIR °F (°C)	OUTDOOR ENTERING AIR TEMPERATURES °F (°C)																															
	-3 (-19.4)				7 (-13.9)				17 (-8.3)				27 (-2.8)				37 (2.7)				47 (8.3)				57 (13.9)				67 (19.4)			
EDB	ID SCFM	Capacity MBtuh		Total Sys. KW**	ID SCFM	Capacity MBtuh		Total Sys. KW**	ID SCFM	Capacity MBtuh		Total Sys. KW**	ID SCFM	Capacity MBtuh		Total Sys. KW**	ID SCFM	Capacity MBtuh		Total Sys. KW**	ID SCFM	Capacity MBtuh		Total Sys. KW**	ID SCFM	Capacity MBtuh		Total Sys. KW**	ID SCFM	Capacity MBtuh		Total Sys. KW**
		Total	Sens‡			Total	Sens‡			Total	Sens‡			Total	Sens‡			Total	Sens‡			Total	Sens‡			Total	Sens‡			Total	Sens‡	
293VAN024 Maximum Demand																																
65 (18.3)		16.2	14.8	2.8		19.7	18.1	2.6		21.4	19.6	2.29		26	23.2	2.31		29.8	27.2	2.3		23.6	23.6	1.39		22.8	22.8	1.09		21.6	21.6	0.82
70 (21.1)	870	16.1	14.7	2.9	900	19.7	18.1	2.7	900	25.4	23	2.7	900	26	23	2.41	900	29.8	27	2.41	900	24.4	24.4	1.81	830	22.6	22.6	1.16	800	21.4	21.4	0.9
75 (23.9)		16.1	14.7	2.97		19.8	18.2	2.82		21.6	19.6	2.51		26	23	2.52		29.6	27	2.51		23.2	23.2	1.59		22.4	22.4	1.25		21.2	21.2	0.97
293VAN024 Intermediate Demand																																
65 (18.3)		8.2	7.5	1.21		10	9.2	1.13		11.2	10.2	0.99	600	11	9.8	0.73		11.5	10.5	0.62	600	10.5	10.5	0.49		11.5	11.5	0.44		13	13	0.41
70 (21.1)	590	8.1	7.4	1.17	600	10	9.2	1.22	600	11.1	10.1	1.06		10.9	9.7	0.79	645	11.3	10.3	0.66		10.3	10.3	0.52	575	11.3	11.3	0.48	565	12.8	12.8	0.45
75 (23.9)		8	7.3	1.15		9.9	9.1	1.27		11.1	10.1	1.14		10.8	9.6	0.84		11.2	10.2	0.71		10.2	10.2	0.57		11.1	11.1	0.52		6.2	6.2	0.55
293VAN024 Minimum Demand																																
65 (18.3)		4.8	4.4	0.66		5.9	5.4	0.62		6.5	5.9	0.53	450	4.6	4.1	0.28		3.5	3.2	0.18	450	4.6	4.6	0.2	450	6	6	0.23		8.5	8.5	0.25
70 (21.1)	450	4.7	4.3	0.7	450	5.8	5.3	0.65	450	6.4	5.8	0.56		4.5	4	0.3	450	3.4	3.1	0.2		4.9	4.9	0.3		5.8	5.8	0.25	450	8.3	8.3	0.28
75 (23.9)		4.6	4.2	0.72		5.7	5.2	0.7		6.3	5.7	0.6		4.4	3.9	0.32		3.3	3	0.21		4.3	4.3	0.24		5.6	5.6	0.28		8.1	8.1	0.31
293VAN036 Maximum Demand																																
65 (18.3)		23.6	21.8	3.01		29.2	27	3.34		32.6	29.8	3.25		38	34	3.3		41	37.6	3.16		35.6	35.6	2.47		37.4	37.4	2.26		41	41	2.15
70 (21.1)	1400	23.4	21.6	3.12	1400	29.2	26.8	3.54	1400	32.4	29.6	3.49	1400	38	33.8	3.48	1400	41	37.2	3.34	1400	34.2	34.2	2.62	1400	37.2	37.2	2.4	1400	40.5	40.5	2.26
75 (23.9)		23.4	21.4	3.27		29	26.6	3.66		32.2	29.4	3.55		37.8	33.6	3.64		40.5	37	3.49		35	35	2.76		36.8	36.8	2.54		40	40	2.39
293VAN036 Intermediate Demand																																
65 (18.3)		12.6	11.6	1.41		16	14.7	1.55		18.7	17.1	1.56		21	18.6	1.47		17	15.5	0.99		16.1	16.1	0.89		18.1	18.1	0.85		20	20	0.83
70 (21.1)	900	12.4	11.4	1.48	900	15.8	14.5	1.63	900	18.5	16.9	1.64	800	20.6	18.4	1.55	700	16.7	15.2	1.05	700	15.9	15.9	0.96	700	17.8	17.8	0.92	700	20	20	0.91
75 (23.9)		12.3	11.3	1.55		15.6	14.3	1.71		18.3	16.7	1.72		20.4	18.1	1.63		16.5	15	1.12		15.6	15.6	1.02		17.5	17.5	0.99		19.9	19.9	0.98
293VAN036 Minimum Demand																																
65 (18.3)		8	7.3	0.9		10.1	9.3	0.95		12.4	11.3	0.99		12.7	11.2	0.83		5.5	5	0.32		6.7	6.7	0.35		8.2	8.2	0.33		9.4	9.4	0.32
70 (21.1)	650	7.8	7.2	0.94	650	9.9	9.1	1	650	12.2	11.2	1.05	650	12.4	11	0.88	650	5.4	4.9	0.35	650	6.2	6.2	0.38	650	8	8	0.37	650	9.4	9.4	0.36
75 (23.9)		7.6	7	0.99		9.7	8.9	1.05		12	11	1.11		12.2	10.9	0.93		5.2	4.7	0.38		6.3	6.3	0.41		7.8	7.8	0.41		9.4	9.4	0.39

Manufacturer reserves the right to change, at any time, specifications and designs without notice and without obligations.

Heat Pump Heating Performance - Efficiency Mode (Continued)

INDOOR AIR °F (°C)	OUTDOOR ENTERING AIR TEMPERATURES °F (°C)																																			
	-3 (-19.4)				7 (-13.9)				17 (-8.3)				27 (-2.8)				37 (2.7)				47 (8.3)				57 (13.9)				67 (19.4)			
EDB	ID SCFM	Capacity MBtuh		Total Sys. KW**	ID SCFM	Capacity MBtuh		Total Sys. KW**	ID SCFM	Capacity MBtuh		Total Sys. KW**	ID SCFM	Capacity MBtuh		Total Sys. KW**	ID SCFM	Capacity MBtuh		Total Sys. KW**	ID SCFM	Capacity MBtuh		Total Sys. KW**	ID SCFM	Capacity MBtuh		Total Sys. KW**	ID SCFM	Capacity MBtuh		Total Sys. KW**
		Total	Sens‡			Total	Sens‡			Total	Sens‡			Total	Sens‡			Total	Sens‡			Total	Sens‡			Total	Sens‡			Total	Sens‡	
293VAN048 Maximum Demand																																				
65 (18.3)		26.8	24.6	3.27		40.5	37.2	4.64		43.5	39.5	4.25		50	44.5	4.24		56	51	4.61		53	53	4.11		58	58	4.15		62	62	4.23
70 (21.1)	1600	26.2	24.2	3.4	1605	40	37	4.77	1565	43	39	4.47	1360	49.5	44	4.45	1325	55.5	50.5	4.84	1400	48.5	48.5	3.82	1400	57.5	57.5	4.39	1400	61	61	4.45
75 (23.9)		26	24	3.56		40	36.8	5.01		41	37.6	4.55		49	43.5	4.66		55	50	5.04		52	52	4.54		57	57	4.61		60.5	60.5	4.69
293VAN048 Intermediate Demand																																				
65 (18.3)		19.2	17.7	2.4		27.2	25	2.83		29.2	26.8	2.61		29.8	26.4	2.22		26.8	24.4	1.75		26	26	1.62		29.2	29.2	1.66		33.4	33.4	1.72
70 (21.1)	1140	19.4	17.8	2.56	1140	27	24.8	2.95	1090	29	26.4	2.76	1020	29.4	26	2.33	1005	26.4	24	1.86	930	25.6	25.6	1.73	850	28.6	28.6	1.77	850	32.8	32.8	1.82
75 (23.9)		18.6	17.1	2.52		27	24.8	3.09		28.6	26	2.89		29	25.8	2.44		26	23.6	1.96		25.2	25.2	1.84		28.4	28.4	1.89		32.2	32.2	1.94
293VAN048 Minimum Demand																																				
65 (18.3)		16	14.7	1.89		19.9	18.3	2.01		22.2	20.2	1.94		18.7	16.7	1.29		11.5	10.5	0.69		12.8	12.8	0.75		15	15	0.8		17.6	17.6	0.82
70 (21.1)	900	15.8	14.5	1.98	900	19.6	18	2.11	900	21.8	19.8	2.03	900	18.4	16.4	1.36	760	11.2	10.2	0.74	600	11.5	11.5	0.71	600	14.9	14.9	0.87	600	16.9	16.9	0.88
75 (23.9)		15.6	14.3	2.08		19.1	17.5	2.2		19.7	17.9	2.19		18.1	16.1	1.45		10.9	10	0.79		12.2	12.2	0.87		14.4	14.4	0.93		16.6	16.6	0.95
293VAN060 Maximum Demand																																				
65 (18.3)		33.4	30.8	3.88		50	46	5.47		54.5	50	5.09		64	56.5	5.18		69	62.5	5.47		70	70	6.25		62.5	62.5	4.82		54.5	54.5	3.44
70 (21.1)	1690	33.2	30.6	4.05	1850	49.5	45.5	5.67	1850	50.5	46	5.36	1850	63.5	56.5	5.41	1765	68	62	5.66	1425	60.5	60.5	5.47	1425	62	62	5.08	1425	54	54	3.65
75 (23.9)		33	30.4	4.24		49.5	45.5	5.95		54	49	5.57		64	57	5.62		67	61.5	5.88		69	69	6.88		61	61	5.29		53.5	53.5	3.86
293VAN060 Intermediate Demand																																				
65 (18.3)		22	20.2	2.44		30.2	27.6	2.86		34	31	2.78		39.5	35	2.69		32.8	29.8	2.16		35	35	2.47		33.8	33.8	2.15		32.8	32.8	1.78
70 (21.1)	1450	21.8	20	2.58	1450	29.8	27.4	2.99	1450	33.6	30.6	2.91	1485	38	33.8	2.83	1470	32.4	29.4	2.29	1245	34.4	34.4	2.6	1245	32.4	32.4	2.17	1245	31.6	31.6	1.75
75 (23.9)		21.6	19.8	2.71		29.6	27.2	3.14		33.2	30.4	3.06		38.5	34	2.99		32	29.2	2.43		34.2	34.2	2.78		33	33	2.45		32.4	32.4	2.06
293VAN060 Minimum Demand																																				
65 (18.3)		16.5	15.2	1.87		20.4	18.7	1.93		24.4	22.2	1.96		25.6	22.6	1.74		13.7	12.5	0.82		14.5	14.5	0.87		15.4	15.4	0.81		17.9	17.9	0.79
70 (21.1)	1250	16.3	15	1.97	1250	20	18.5	2.02	1250	24.2	22	2.09	1140	25.2	22.4	1.84	980	13.3	12.1	0.89	850	12.2	12.2	0.89	850	15	15	0.9	850	17.5	17.5	0.89
75 (23.9)		16	14.7	2.06		19.8	18.2	2.13		23.8	21.8	2.19		25	22.2	1.96		12.9	11.7	0.96		13.7	13.7	1.04		14.7	14.7	0.99		17.1	17.1	0.99

NOTES:
** The kW values include the compressor, outdoor fan motor, and indoor blower motor. The kW from supplement heaters should be added to these values to obtain Total Sys. kilowatts.
}The Btuh heating capacity values shown are net integrated values from which the defrost effect has been subtracted. The Btuh heating from supplement heaters should be added to those values to obtain Total Sys. capacity.
NOTE: When the required data falls between the published data, interpolation may be performed. Extrapolation is not an acceptable practice.
EDB — Entering Dry Bulb

Manufacturer reserves the right to change, at any time, specifications and designs without notice and without obligations.

Guide specifications
General

AIR-COOLED, SPLIT-SYSTEM HEAT PUMP
293VAN
2 TO 5 NOMINAL TONS

System Description

Outdoor-mounted, air-cooled, split-system heat pump unit suitable for ground or rooftop installation. Unit consists of a hermetic compressor, an air-cooled coil, forward-swept blade propeller-type condenser fan, and a control box. Unit will discharge supply air upward as shown on contract drawings. Unit will be used in a refrigeration circuit to match up to a packaged fan coil or coil unit.

Quality Assurance

- Unit will be rated in accordance with the latest edition of AHRI Standard 240.
- Unit will be certified for capacity and efficiency, and listed in the latest AHRI directory.
- Unit construction will comply with latest edition of ASHRAE and with NEC.
- Unit will be constructed in accordance with UL standards and will carry the UL label of approval. Unit will have C-UL approval.
- Unit cabinet will be capable of withstanding Federal Test Method Standard No. 141 (Method 6061) 500-hr salt spray test.
- Air-cooled condenser coils are pressure tested and the outdoor units are leak tested.
- Unit constructed in ISO9001 approved facility.

Delivery, Storage, and Handling

- Unit will be shipped as single package only and is stored and handled per unit manufacturer's recommendations.

Warranty (for inclusion by specifying engineer)

- U.S. and Canada only.

PRODUCTS

Equipment

- Factory-assembled, single-piece, air-cooled heat pump. Contained within the unit enclosure is all factory wiring, piping, controls, compressor, refrigerant charge Puron Advance™ (R-454B) refrigerant, and special features required prior to field start-up.

Unit Cabinet

- Unit cabinet will be constructed of galvanized steel, bonderized, and coated with a powder coat paint.

Fans

- Condenser fan will be direct-drive propeller type, forward swept blade, discharging air upward.
- Condenser fan motors will be totally enclosed, 1-phase type with class B insulation and permanently lubricated.
- Fan blades will be statically and dynamically balanced.
- Condenser fan openings will be equipped with coated steel wire safety guards.

Compressor

- Compressor will be hermetically sealed.
- Compressor will be mounted on rubber vibration isolators.
- Compressor will be covered with a sound absorbing blanket.

Condenser Coil

- Condenser coil will be air cooled.
- Coil will be constructed of aluminum fins mechanically bonded to copper or aluminum tubes which are then cleaned, dehydrated, and sealed.

Refrigeration Components

- Refrigeration circuit components will include liquid-line and vapor line front-seating shutoff valve with provisions for sweat or mechanical connections, system charge of Puron Advance™ (R-454B) refrigerant, PVE compressor oil, accumulator, electronic expansion valve, reversing valve, and pressure equalization valve.
- Unit will be equipped with high-pressure switch, suction and discharge pressure transducers, and filter drier for Puron Advance™ (R-454B) refrigerant.

Operating Characteristics

- The capacity of the unit will meet or exceed _____ Btuh at a suction temperature of _____ _F (_C). The power consumption at full load will not exceed _____ kW.
- Combination of the unit and the evaporator or fan coil unit will have a total net cooling capacity of _____ Btuh or greater at conditions of _____ CFM entering air temperature at the evaporator at _____ _F (_C) wet bulb and _____ _F (_C) dry bulb, and air entering the unit at _____ _F (_C).
- The system will have a SEER2 of _____ Btuh/watt or greater at DOE conditions.

Electrical Requirements

- Nominal unit electrical characteristics will be _____ v, single phase, 60 hz. The unit will be capable of satisfactory operation within voltage limits of _____ v to _____ v.
- Unit electrical power will be single point connection.
- Control circuit will be 24v.

Special Features

- Refer to section of this literature identifying accessories and descriptions for specific features and available enhancements.
- Evolution™ Connex™ System Control with appropriate software version is required for full featured operation.

System Design Summary

1. System must be installed with factory approved R454B Indoor unit only.
2. Factory authorized dissipation control board must be installed with indoor unit.
3. Must use Evolution™ Connex™ System Control listed in pre-sale literature only
4. Intended for outdoor installation with free air inlet and outlet. Outdoor fan external static pressure available is less than 0.01-in. wc.
5. This product is qualified for low ambient cooling operation (below 55_F / 12.8_C) with an Evolution™ Connex™ System Control **ONLY**.
6. The maximum outdoor operating ambient in cooling mode is 125_F (51.7_C).
7. Minimum outdoor operating air temperature for heating mode is –13°F (–25°C).
8. For reliable operation, unit must be level in all horizontal planes.
9. For interconnecting refrigerant tube lengths greater than 80 ft (23.4 m) and/or elevation differences between indoor and outdoor units greater than 20 ft (6.1 m), consult Residential Piping and Long Line Guideline and Service Manual available from equipment distributor.
10. If any refrigerant tubing is buried, provide a 6 in. (152.4 mm) vertical rise to the valve connections at the unit. Refrigerant tubing lengths up to 36 in. (914.4 mm) may be buried without further consideration. Do not bury refrigerant lines longer than 36 in. (914.4 mm).
11. Use only copper wire for electrical connection at unit. Aluminum and clad aluminum are not acceptable for the type of connector provided.
12. Do not apply capillary tube indoor coils to these units.
13. Factory-supplied filter drier must be installed.

© 2025 Carrier. All rights reserved.

Manufacturer reserves the right to change, at any time, specifications and designs without notice and without obligations.