PAYNE®

PG95XAT
CONDENSING GAS FURNACE

Product Data

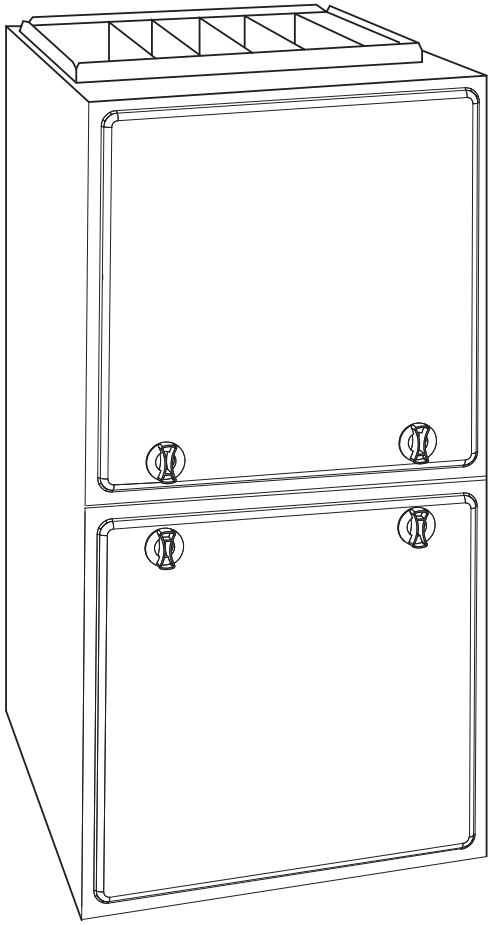

A11300

Utilizing the extensive resources available to Payne®, a new standard of excellence has been achieved with the model PG95XAT. The model is a unique 4-way multipoise condensing furnace with features like no other product in its class including two heating stages and a highly efficient ECM Blower Motor. The PG95XAT builds on the many Payne successes in the furnace industry and establishes a new standard for all high-efficiency gas furnaces.

STANDARD FEATURES

- Heating efficiency of 95.5% AFUE
- Two heating stages
- Highly efficient ECM blower motor
- Humidity control when paired with a compatible condensing unit and using a humidity sensing thermostat
- Adjustable constant fan speed from a compatible thermostat
- LED diagnostics and self test feature
- Stores fault codes during power outages
- Adjustable heating air temperature rise
- Dehumidification terminals on control board
- Hot surface ignition
- Dual fuel compatible
- Two-speed inducer motor

LIMITED WARRANTY*

- 20-year limited warranty on heat exchangers.
- 10 year parts and lifetime heat exchanger limited warranty to the original purchaser upon timely registration.
- Limited warranty period is five years for parts and twenty years for the heat exchanger if not registered within 90 days of installation.†

* For owner occupied, residential applications.

†Jurisdictions where warranty benefits cannot be conditioned on registration will receive registered limited warranty benefits.

ENERGY STAR

DESIGN CERTIFIED

CERTIFIED

AHRI CERTIFIED™ www.ahridirectory.org

Use of the AHRI Certified ™ Mark indicates a manufacturer's participation in the program. For verification of certification for individual products, go to www.ahridirectory.org.

Certified System ISO 9001 QMI-SAI Global

Always Ask For FACTORY AUTHORIZED PARTS

SPECIFICATIONS

Heating Capacity and Efficiency			030040	042060	048080	048100	066120
Input	High Heat	(BTUH)	40,000	60,000	80,000	100,000	120,000
	Low Heat	(BTUH)	26,000	39,000	52,000	65,000	78,000
Output	High Heat	(BTUH)	39,000	58,000	78,000	98,000	117,000
	Low Heat	(BTUH)	25,000	38,000	52,000	63,000	76,000
Efficiency	AFUE % (ICS)		95.5	95.5	95.5	95.5	95.5
Certified Temperature Rise Range ºF (ºC)		High Heat	40 - 70 (21-38)	35 - 65 (19-36)	40 - 70 (21-38)	45 - 75 (25-41)	45 - 75 (25-41)
		Low Heat	30 - 60 (17-33)	30 - 60 (17-33)	30 - 60 (17-33)	30 - 60 (17-33)	30 - 60 (17-33)
Airflow Capacity and Blower Data			**030040**	**042060**	**048080**	**048100**	**066120**
Certified External Static Pressure (in. w.c.)		Heating	0.10	0.12	0.15	0.20	0.20
		Cooling	0.5	0.5	0.5	0.5	0.5
Airflow Delivery @ Rated ESP (CFM)		High Heat	695	1000	1360	1730	2125
		Low Heat	585	780	1100	1380	1610
		Cooling	925	1505	1610	1720	2055
Cooling Capacity (tons) @ 400, 350 CFM/ton		400 CFM/ton	2	3.5	4	4	5
		350 CFM/ton	2.5	4	4.5	5	6
Direct-Drive Motor Type			Electronically Commutated Motor (ECM)				
Direct-Drive Motor HP			1/2	3/4	3/4	1	1
Motor Full Load Amps			6.8	8.4	8.4	10.9	10.9
RPM Range			600 - 1200				
Speed Selections			5				
Blower Wheel Dia x Width		in.	11x7	11x8	11x8	11x10	11 x 11
Air Filtration System			Factory Supplied Media Cabinet Field Supplied Filter				
Filter Used for Certified Watt Data			KGAWF1606UFR	KGAWF1306UFR	KGAWF1406UFR	KGAWF1506UFR	KGAWF1506UFR
Electrical Data			**030040**	**042060**	**048080**	**048100**	**066120**
Input Voltage		Volts-Hertz-Phase	115-60-1				
Operating Voltage Range		Min-Max	104-127				
Maximum Input Amps		Amps	8.2	9.8	9.8	12.3	12.3
Unit Ampacity		Amps	11.0	13.0	13.0	16.1	16.1
Minimum Wire Size		AWG	14	14	14	12	12
Maximum Wire Length @ Minimum Wire Size		Feet	33	28	28	35	35
		(M)	(10.1)	(8.5)	(8.5)	(10.7)	(10.7)
Maximum Fuse/Ckt Bkr (Time-Delay Type Recommended)		Amps	15	15	15	20	20
Transformer Capacity (24vac output)			40 VA				
External Control Power Available		Heating	24.3 VA				
		Cooling	34.6 VA				
Controls			**030040**	**042060**	**048080**	**048100**	**066120**
Gas Connection Size			1/2" - NPT				
Burners (Monoport)			2	3	4	5	6
Gas Valve (Redundant)		Manufacturer	White Rogers™				
		Minimum Inlet Gas pressure (in. W.C.)	4.5				
		Maximum Inlet Gas pressure (in. W.C.)	13.6				
Gas Conversion Kit - Natural to Propane			KGANP51012SP				
Gas Conversion Kit - Propane to Natural			KGAPN43012SP				
Manufactured (Mobile) Home Kit			*not approved for MH use*				
Ignition Device			Silicon Nitride				
Limit Control			165	180	170	160	160
Heating Blower Control (Heating Off-Delay)			Adjustable: 90, 120, 150, 180 seconds				
Cooling Blower Control (Time Delay Relay)			90 seconds				
Communication System			*none*				
Thermostat Connections			W2, Y1, DHUM, G C W/W1, Y/Y2, R				
Accessory Connections			EAC (115vac); HUM (24vac); 1-stg AC (via Y/Y2)				

MODEL NUMBER NOMENCLATURE

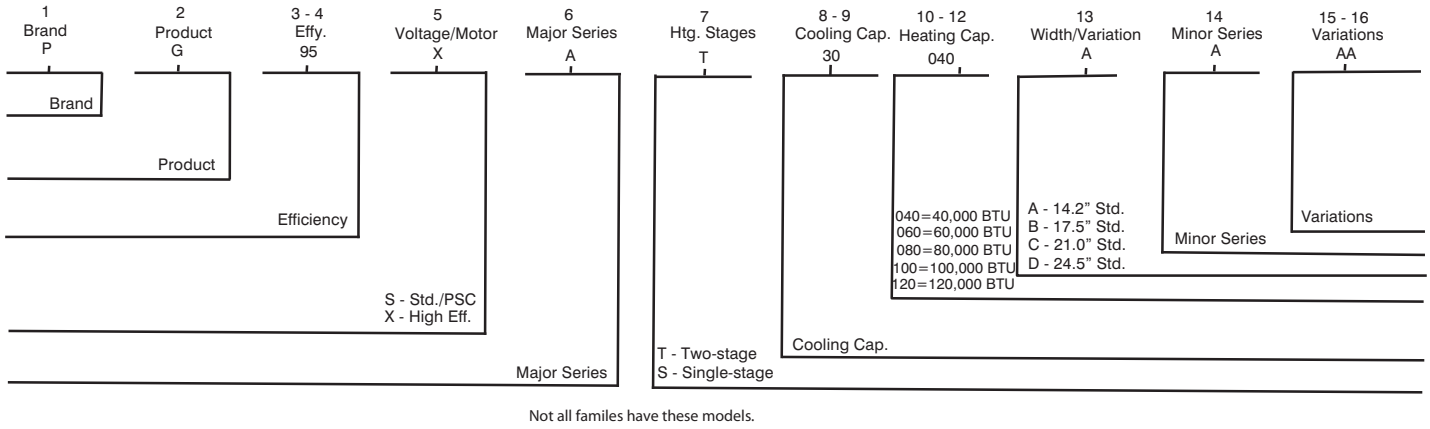

Not all familes have these models.

A11166

FURNACE COMPONENTS

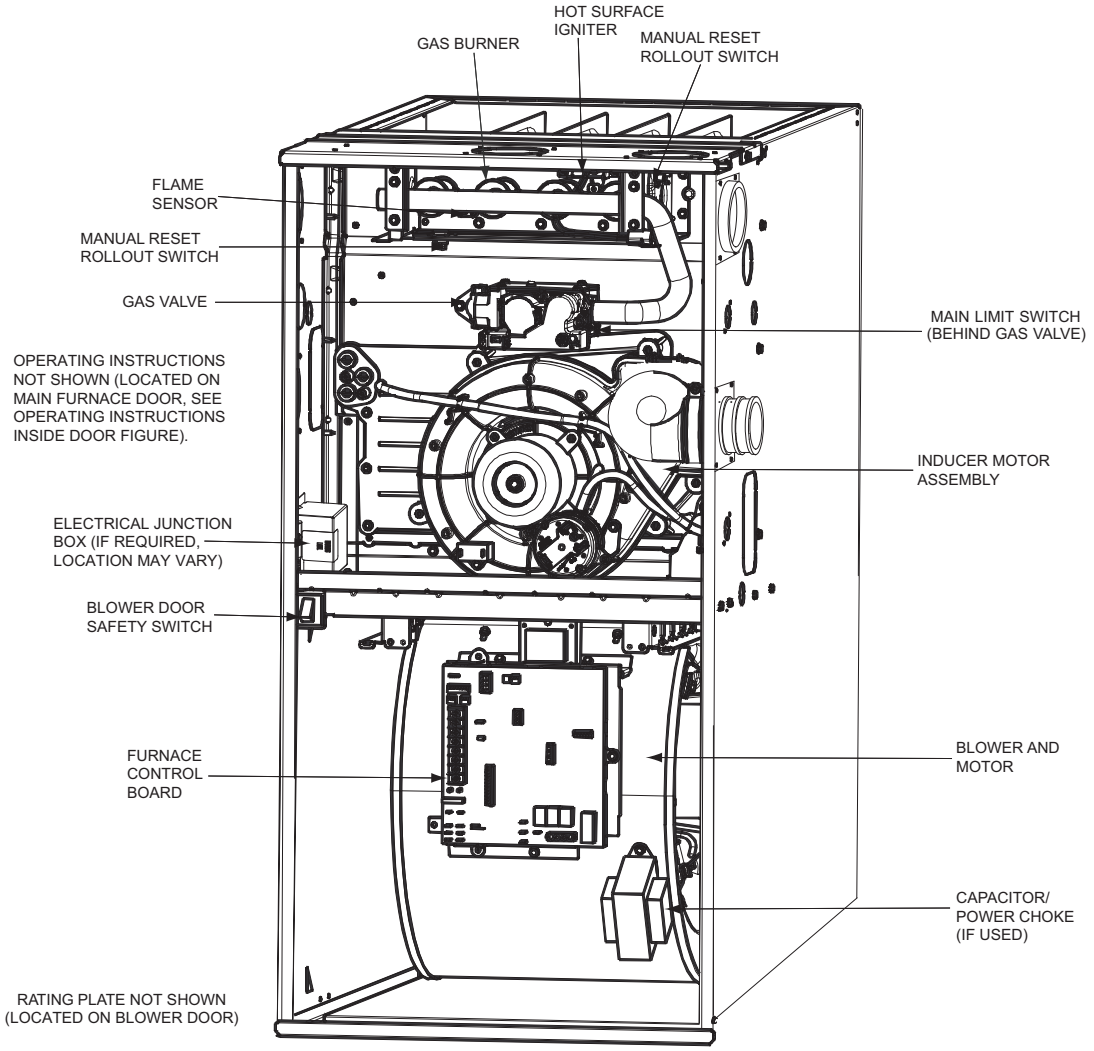

REPRESENTATIVE DRAWING ONLY, SOME MODELS MAY VARY IN APPEARANCE.

A11485

ACCESSORIES

DESCRIPTION	PART NUMBER	30040	42060	48080	48100	66120
Venting, Drainage and Installation						
Vent Kit - Through the Cabinet	KGADC0101BVC	X	X	X	X	X
Vent Terminal - Concentric - 2” (51 mm)	KGAVT0701CVT	X	X	X	X	N/A
Vent Terminal - Concentric - 3” (76 mm)	KGAVT0801CVT	N/A	X	X	X	X
Vent Terminal Bracket - 2” (51 mm)	KGAVT0101BRA	X	X	X	X	N/A
Vent Terminal Bracket - 3” (76 mm)	KGAVT0201BRA	N/A	X	X	X	X
CPVC to PVC Drain Adapters - 1/2” CPVC to 3/4” PVC	KGAAD0110PVC	X	X	X	X	X
Horizontal Trap Grommet - Direct Vent	KGACK0101HCK	X	X	X	X	X
Freeze Protect Kit - Heat Patch for Drain Trap	KGAHT0201CFP	X	X	X	X	X
Freeze Protect Kit - Heat Tape	KGAHT0101CFP	X	X	X	X	X
Furnace Base Kit for Combustible Floors	KGASB0201ALL	X	X	X	X	X
Gas Conversion						
Gas Cnv Kit - Nat to LP; Two-stage	KGANP51012SP	X	X	X	X	X
Gas Cnv Kit - LP to Nat; Two-stage	KGAPN43012SP	X	X	X	X	X
Gas Orifice Kit - #42 (Nat Gas)	KGAHA0150N42	X	X	X	X	X
Gas Orifice Kit - #43 (Nat Gas)	KGAHA0250N43	X	X	X	X	X
Gas Orifice Kit - #44 (Nat Gas)	KGAHA0350N44	X	X	X	X	X
Gas Orifice Kit - #45 (Nat Gas)	KGAHA0450N45	X	X	X	X	X
Gas Orifice Kit - #46 (Nat Gas)	KGAHA0550N46	X	X	X	X	X
Gas Orifice Kit - #47 (Nat Gas)	KGAHA1550N47	X	X	X	X	X
Gas Orifice Kit - #48 (Nat Gas)	KGAHA1650N48	X	X	X	X	X
Gas Orifice Kit - #54 (LP)	KGAHA0650P54	X	X	X	X	X
Gas Orifice Kit - #55 (LP)	KGAHA0750P55	X	X	X	X	X
Gas Orifice Kit - #56 (LP)	KGAHA0850P56	X	X	X	X	X
Gas Orifice Kit - 1.25mm (LP)	KGAHA5750125	X	X	X	X	X
Gas Orifice Kit - 1.30mm (LP)	KGAHA5750130	X	X	X	X	X
Indoor Air Quality						
Media Cabinet - 16” (406 mm)	FILCABXL0016	X	X	X	X	X
Media Cabinet - 20” (508 mm)	FILCABXL0020	X	X	X	X	X
Media Cabinet - 24” (610 mm)	FILCABXL0024	N/A	N/A	X	X	X
Filter Rack - Bottom Return - 14” (356 mm) Cabinet	KGBFR0401B14	X	N/A	N/A	N/A	N/A
Filter Rack - Bottom Return - 17.5” (445 mm) Cabinet	KGBFR0501B17	N/A	X	X	N/A	N/A
Filter Rack - Bottom Return - 21” (533 mm) Cabinet	KGBFR0601B21	N/A	N/A	N/A	X	N/A
Filter Rack - Bottom Return - 24.5” (622 mm) Cabinet	KGAFR0701B24	N/A	N/A	N/A	N/A	X
Filter Rack - Side Return for 1” (25 mm) Filters	KGAFR0801SRE	X	X	X	X	X
Cartridge Media Filter - 16” (406 mm)	FILXXCAR0016	X	X	X	X	X
Cartridge Media Filter - 20” (508 mm)	FILXXCAR0020	X	X	X	X	X
Cartridge Media Filter - 24” (610 mm)	FILXXCAR0024	N/A	N/A	X	X	X
EZ-Flex Filter - 16” (406 mm)	EXPXXFIL0016	X	X	X	X	X
EZ-Flex Filter - 20” (508 mm)	EXPXXFIL0020	X	X	X	X	X
EZ-Flex Filter - 24” (610 mm)	EXPXXFIL0024	N/A	N/A	X	X	X
EZ-Flex Filter with End Caps - 16” (406 mm)	EXPXXUNV0016-A09	X	X	X	X	X
EZ-Flex Filter with End Caps - 20” (508 mm)	EXPXXUNV0020-A09	X	X	X	X	X
EZ-Flex Filter with End Caps - 24” (610 mm)	EXPXXUNV0024-A06	N/A	N/A	X	X	X
Filter Pack (6 pack) - Washable - 16x25x1 (406x635x25 mm)	KGAWF1306UFR	X	X	X	X	X
Filter Pack (6 pack) - Washable - 24x25x1 (610x635x25 mm)	KGAWF1506UFR	N/A	X	X	X	X

X = Used with this model furnace

N/A = Not used with this model furnace

AIR DELIVERY - CFM (BOTTOM RETURN WITH FILTER)

INPUT BTUH	RETURN-AIR SUPPLY	SPEED	EXTERNAL STATIC PRESSURE (IN. W.C.)									
			0.1	0.2	0.3	0.4	0.5	0.6	0.7	0.8	0.9	1
40000	SIDE/BOTTOM	5(Gry)	1120	1080	1030	980	925	875	820	760	690	630
		4(Yel)	880	845	810	780	740	710	680	640	615	570
		3(Blu)	695	665	620	575	535	495	455	420	370	280
		2(Org)	640	595	540	495	460	420	370	310	260	230
		1(Red)	570	525	475	425	385	330	255	220	-	-
60000	SIDE/BOTTOM	5(Gry)	1720	1670	1620	1565	1505	1440	1375	1295	1220	1135
		4(Yel)	1325	1285	1255	1220	1185	1145	1115	1075	1040	1000
		3(Blu)	1010	970	925	875	835	785	745	690	660	620
		2(Org)	1160	1115	1080	1045	1000	960	920	875	840	785
		1(Red)	785	715	655	595	530	490	435	385	340	285
80000	SIDE/BOTTOM	5(Gry)	1810	1770	1720	1665	1610	1540	1475	1400	1315	1235
		4(Yel)	1535	1500	1475	1435	1405	1370	1340	1310	1245	1160
		3(Blu)	1380	1340	1305	1270	1240	1200	1165	1130	1090	1050
		2(Org)	1180	1130	1095	1060	1015	975	935	895	850	800
		1(Red)	1100	1045	1010	970	920	885	845	790	745	690
100000	SIDE/BOTTOM	5(Gry)	2040	1970	1885	1795	1720	1635	1540	1450	1360	1230
		4(Yel)	1550	1505	1460	1415	1365	1325	1280	1230	1180	1135
		3(Blu)	1780	1730	1690	1645	1610	1555	1481	1400	1310	1210
		2(Org)	1345	1295	1250	1195	1155	1105	1055	1000	955	915
		1(Red)	1390	1350	1295	1260	1200	1160	1105	1050	1010	965
120000	BOTTOM OR TWO SIDES	5(Gry)	2275	2230	2185	2130	2055	1950	1825	1710	1610	1500
		4(Yel)	1875	1820	1770	1720	1660	1600	1550	1505	1450	1390
		3(Blu)	2170	2125	2075	2025	1975	1900	1790	1695	1590	1470
		2(Org)	1475	1420	1350	1280	1215	1165	1105	1050	995	930
		1(Red)	1625	1565	1505	1445	1385	1325	1275	1225	1170	1130

NOTE: A filter is required for each return−air inlet. Airflow performance included 3/4−in. (19 mm) washable filter media such as contained in factory−authorized accessory filter rack. To determine airflow performance without this filter, assume an additional 0.1 in. W.C. available external static pressure.
− Indicates unstable operating conditions.

MAXIMUM EQUIVALENT VENT LENGTH - FT. (M)

NOTE: Maximum Equivalent Vent Length (MEVL) does NOT include elbows or terminations. Use Table 2 - Deductions from Maximum Equivalent Vent Length to determine allowable vent length for each application.

Table 1 – Maximum Equivalent Vent Length - Ft. (M)
0 to 4500 Ft. (0 to 1370 M) Altitude

Altitude FT (M)	Unit Size BTU/Hr	DIRECT VENT (2-PIPE) AND NON–DIRECT VENT (1–PIPE)									
		Vent Pipe Diameter (in.)									
		1-1/2		2		2-1/2		3		4	
0 to 2000 (0 to 610)	40,000*[2]	50	(15.2)	210	(64.0)	250	(76.2)	NA		NA	
	60,000	30	(9.1)	135	(41.1)	235	(71.6)	265	(80.8)	NA	
	80,000	20	(6.1)	70	(21.3)	175	(53.3)	235	(71.6)	265	(80.8)
	100,000	NA		25	(7.6)	110	(33.5)	235	(71.6)	265	(80.8)
	120,000	NA		NA		15	(4.6)	100	(30.5)	250	(76.2)
2001 to 3000 (610 to 914)	40,000*	45	(13.7)	198	(60.4)	232	(70.7)	NA		NA	
	60,000	27	(8.2)	127	(38.7)	222	(67.7)	250	(76.2)	NA	
	80,000	17	(5.2)	64	(19.5)	165	(50.3)	222	(67.7)	249	(75.9)
	100,000	NA		22	(6.7)	104	(31.7)	223	(68.0)	250	(76.2)
	120,000	NA		NA		11	(3.4)	93	(28.3)	237	(72.2)
3001 to 4000 (914 to 1219)	40,000*	39	(11.9)	184	(56.1)	214	(65.2)	NA		NA	
	60,000	23	(7.0)	119	(36.3)	210	(64.0)	235	(71.6)	NA	
	80,000	15	(4.6)	59	(18.0)	155	(47.2)	210	(64.0)	232	(70.7)
	100,000	NA		19	(5.8)	98	(29.9)	211	(64.3)	236	(71.9)
	120,000	NA		NA		8	(2.4)	86	(26.2)	224	(68.3)
4001 to 4500 (1219 to 1370)	40,000*	36	(11.0)	177	(53.9)	205	(62.5)	NA		NA	
	60,000	21	(6.4)	115	(35.1)	204	(62.2)	228	(69.5)	NA	
	80,000	14	(4.3)	56	(17.1)	150	(45.7)	202	(61.6)	224	(68.3)
	100,000	NA		17	(5.2)	94	(28.7)	205	(62.5)	229	(69.8)
	120,000	NA		NA		NA		83	(25.3)	217	(66.1)

* Not all families have these models.
NOTE: See notes at end of venting tables.
NOTE: See Table 3 for altitudes over 4500 ft. (1370 M)

Table 2 – Deductions from Maximum Equivalent Vent Length - Ft. (M)

Pipe Diameter (in):	1-1/2		2		2-1/2		3*		4*	
Mitered 90º Elbow	8	(2.4)	8	(2.4)	8	(2.4)	NA	NA	NA	NA
Medium Radius 90º Elbow	5	(1.5)	5	(1.5)	5	(1.5)	NA	NA	NA	NA
Long Radius 90º Elbow	3	(0.9)	3	(0.9)	3	(0.9)	3	(0.9)	3	(0.9)
Mitered 45º Elbow	4	(1.2)	4	(1.2)	4	(1.2)	NA	NA	NA	NA
Medium Radius 45º Elbow	2.5	(0.8)	2.5	(0.8)	2.5	(0.8)	NA	NA	NA	NA
Long Radius 45º Elbow	1.5	(0.5)	1.5	(0.5)	1.5	(0.5)	1.5	(0.5)	1.5	(0.5)
Tee	16	(4.9)	16	(4.9)	16	(4.9)	16	(4.9)	16	(4.9)

*Note: 3– and 4–in. Vent pipe systems require long radius elbows.

Venting System Length Calculations

The maximum length for each vent pipe (inlet or exhaust) equals the Maximum Equivalent Vent Length (MEVL) from Table 1 or Table 3 minus the number of elbows multiplied by the deduction for each elbow in Table 2.

Standard vent terminations and concentric vent terminations count for zero deductions.

Example

A direct-vent 60,000 Btuh furnace installed at 2100 ft. (640 M) with 2-in. (51 mm) vent piping. Venting system includes, **FOR EACH PIPE**, (3) 90° long radius elbows, (2) 45° long radius elbows and a concentric vent kit.

Maximum Equivalent Vent Length				=	127 ft.	(From Table 1)
Deduct (3) 90 long radius	3	x	3 ft.	=	- 9 ft.	(From Table 2)
Deduct (2) 45 long radius	2	x	1.5 ft.	=	- 3 ft.	(From Table 2)
Maximum Vent Length				=	115 ft.	For **EACH** vent or inlet pipe

MAXIMUM EQUIVALENT VENT LENGTH - FT. (M)

Table 3 – Maximum Equivalent Vent Length - Ft. (M)
4501 to 10,000 Ft. (0 to 1370 M) Altitude

NOTE: Maximum Equivalent Vent Length (MEVL) does NOT include elbows or terminations. Use Table 2 - Deductions from Maximum Equivalent Vent Length to determine allowable vent length for each application.

Altitude FT (M)	Unit Size	DIRECT VENT (2-PIPE) AND NON–DIRECT VENT (1–PIPE)									
		Vent Pipe Diameter									
		1-1/2		2		2-1/2		3		4	
4501 to 5000 (1370 to 1524)	40,000*	33	(10.1)	171	(52.1)	196	(59.7)	NA		NA	
	60,000	20	(6.1)	111	(33.8)	198	(60.4)	221	(67.4)	NA	
	80,000	13	(4.0)	54	(16.5)	146	(44.5)	195	(59.4)	216	(65.8)
	100,000	NA		16	(4.9)	91	(27.7)	200	(61.0)	222	(67.7)
	120,000	NA		NA		NA		80	(24.4)	211	(64.3)
5001 to 6000 (1524 to 1829)	40,000*	27	(8.2)	158	(48.2)	179	(54.6)	NA		NA	
	60,000	16	(4.9)	103	(31.4)	186	(56.7)	207	(63.1)	NA	
	80,000	11	(3.4)	49	(14.9)	137	(41.8)	183	(55.8)	200	(61.0)
	100,000	NA		12	(3.7)	85	(25.9)	188	(57.3)	208	(63.4)
	120,000	NA		NA		NA		74	(22.6)	199	(60.7)
6001 to 7000 (1829 to 2134)	40,000*	21	(6.4)	145	(44.2)	162	(49.4)	NA		NA	
	60,000	13	(4.0)	96	(29.3)	174	(53.0)	194	(59.1)	NA	
	80,000	NA		44	(13.4)	120	(36.6)	171	(52.1)	185	(56.4)
	100,000	NA		10	(3.0)	79	(24.1)	178	(54.3)	195	(59.4)
	120,000	NA		NA		NA		68	(20.7)	187	(57.0)
7001 to 8000 (2134 to 2438)	40,000*	15	(4.6)	133	(40.5)	146	(44.5)	NA		NA	
	60,000	10	(3.0)	89	(27.1)	163	(49.7)	181	(55.2)	NA	
	80,000	NA		40	(12.2)	120	(36.6)	159	(48.5)	170	(51.8)
	100,000	NA		NA		73	(22.3)	167	(50.9)	182	(55.5)
	120,000	NA		NA		NA		62	(18.9)	175	(53.3)
8001 to 9000 (2438 to 2743)	40,000*	10	(3.0)	121	(36.9)	130	(39.6)	NA		NA	
	60,000	7	(2.1)	82	(25.0)	152	(46.3)	168	(51.2)	NA	
	80,000	NA		35	(10.7)	111	(33.8)	148	(45.1)	156	(47.5)
	100,000	NA		NA		67	(20.4)	157	(47.9)	170	(51.8)
	120,000	NA		NA		NA		56	(17.1)	164	(50.0)
9001 to 10,000 (2743 to 3048)	40,000*	5	(1.5)	110	(33.5)	115	(35.1)	NA		NA	
	60,000	NA		76	(23.2)	142	(43.3)	156	(47.5)	NA	
	80,000	NA		31	(9.4)	103	(31.4)	137	(41.8)	142	(43.3)
	100,000	NA		NA		62	(18.9)	147	(44.8)	157	(47.9)
	120,000	NA		NA		NA		51	(15.5)	153	(46.6)

*Not all families have these models.

Notes:

1. 3– and 4–in. Vent pipe systems require long radius elbows.
2. Total equivalent vent lengths under 10' for 40,000 require the use of an outlet choke plate at altitude 0 to 2,000 ft (0 to 610M).
   Failure to use an outlet choke when required may result in flame disturbance or flame sense lockout.
3. Vent sizing for Canadian installations over 4500 ft (1370m) above sea level are subject to acceptance by the local authorities having jurisdiction.
4. NA – Not allowed; pressure switch will not close, or flame disturbance may result.
5. Do not use pipe size greater than those specified in table or incomplete combustion, flame disturbance, or flame sense lockout may occur.
6. Size both the combustion–air and vent pipe independently, then use the larger diameter for both pipes.
7. Assume the two 45° elbows equal one 90° elbow. Wide radius elbows are desirable and may be required in some cases.
8. Elbows and pipe sections within the furnace casing and at the vent termination should not be included in vent length or elbow count.
9. The minimum pipe length is 5 ft. (1.5 M) for all applications.
10. Use 3–in. (76 mm) diameter vent termination kit for installations requiring 4–in. (102 mm) diameter pipe.

MAXIMUM ALLOWABLE EXPOSED VENT LENGTHS INSULATION TABLE - FT. (M)

Maximum Length of Uninsulated and Insulated Vent Pipe-Ft (M)																	
Two Stage Furnace High Heat Input	Winter Design Temp °F (°C)	Pipe Length in Ft. & M	No Insulation					3/8-in. (9.5 mm)					1/2-in. (12.7 mm)				
			Pipe Diameter-in. (mm)					Pipe Diameter-in. (mm)					Pipe Diameter-in. (mm)				
			1.5	2.0	2.5	3.0	4.0	1.5	2.0	2.5	3.0	4.0	1.5	2.0	2.5	3.0	4.0
			(38)	(51)	(64)	(76)	(102)	(38)	(51)	(64)	(76)	(102)	(38)	(51)	(64)	(76)	(102)
40000*	20 (-10)	Ft.	40.0	35.0	35.0	N/A	N/A	50.0	104.0	94.0	N/A	N/A	50.0	122.0	110.0	N/A	N/A
		M	12.2	10.7	10.7	N/A	N/A	15.2	31.7	28.7	N/A	N/A	15.2	37.2	33.5	N/A	N/A
	0 (-20)	Ft.	19.0	14.0	12.0	N/A	N/A	50.0	61.0	54.0	N/A	N/A	50.0	74.0	65.0	N/A	N/A
		M	5.8	4.3	3.7	N/A	N/A	15.2	18.6	16.5	N/A	N/A	15.2	22.6	19.8	N/A	N/A
	-20 (-30)	Ft.	9.0	3.0	1.0	N/A	N/A	50.0	41.0	35.0	N/A	N/A	50.0	51.0	43.0	N/A	N/A
		M	2.7	0.9	0.3	N/A	N/A	15.2	12.5	10.7	N/A	N/A	15.2	15.5	13.1	N/A	N/A
	-40 (-40)	Ft.	3.0	0.0	0.0	N/A	N/A	39.0	29.0	23.0	N/A	N/A	48.0	37.0	30.0	N/A	N/A
		M	0.9	0.0	0.0	N/A	N/A	11.9	8.8	7.0	N/A	N/A	14.6	11.3	9.1	N/A	N/A
60000	20 (-10)	Ft.	30.0	51.0	51.0	45.0	N/A	30.0	135.0	138.0	120.0	N/A	30.0	135.0	162.0	141.0	N/A
		M	9.1	15.5	15.5	13.7	N/A	9.1	41.1	42.1	36.6	N/A	9.1	41.1	49.4	43.0	N/A
	0 (-20)	Ft.	30.0	24.0	23.0	16.0	N/A	30.0	93.0	82.0	69.0	N/A	30.0	111.0	98.0	83.0	N/A
		M	9.1	7.3	7.0	4.9	N/A	9.1	28.3	25.0	21.0	N/A	9.1	33.8	29.9	25.3	N/A
	-20 (-30)	Ft.	18.0	11.0	9.0	1.0	N/A	30.0	65.0	56.0	44.0	N/A	30.0	79.0	68.0	55.0	N/A
		M	5.5	3.4	2.7	0.3	N/A	9.1	19.8	17.1	13.4	N/A	9.1	24.1	20.7	16.8	N/A
	-40 (-40)	Ft.	10.0	3.0	0.0	0.0	N/A	30.0	48.0	40.0	29.0	N/A	30.0	59.0	50.0	38.0	N/A
		M	3.0	0.9	0.0	0.0	N/A	9.1	14.6	12.2	8.8	N/A	9.1	18.0	15.2	11.6	N/A
80000	20 (-10)	Ft.	20.0	64.0	64.0	56.0	47.0	20.0	70.0	173.0	150.0	125.0	20.0	70.0	175.0	177.0	147.0
		M	6.1	19.5	19.5	17.1	14.3	6.1	21.3	52.7	45.7	38.1	6.1	21.3	53.3	53.9	44.8
	0 (-20)	Ft.	20.0	32.0	30.0	22.0	11.0	20.0	70.0	104.0	87.0	67.0	20.0	70.0	124.0	104.0	82.0
		M	6.1	9.8	9.1	6.7	3.4	6.1	21.3	31.7	26.5	20.4	6.1	21.3	37.8	31.7	25.0
	-20 (-30)	Ft.	20.0	17.0	14.0	6.0	0.0	20.0	70.0	71.0	57.0	40.0	20.0	70.0	86.0	71.0	52.0
		M	6.1	5.2	4.3	1.8	0.0	6.1	21.3	21.6	17.4	12.2	6.1	21.3	26.2	21.6	15.8
	-40 (-40)	Ft.	15.0	7.0	5.0	0.0	0.0	20.0	61.0	52.0	40.0	24.0	20.0	70.0	64.0	50.0	33.0
		M	4.6	2.1	1.5	0.0	0.0	6.1	18.6	15.8	12.2	7.3	6.1	21.3	19.5	15.2	10.1
100000	20 (-10)	Ft.	N/A	25.0	79.0	70.0	59.0	N/A	25.0	110.0	186.0	155.0	N/A	25.0	110.0	219.0	182.0
		M	N/A	7.6	24.1	21.3	18.0	N/A	7.6	33.5	56.7	47.2	N/A	7.6	33.5	66.8	55.5
	0 (-20)	Ft.	N/A	25.0	40.0	31.0	19.0	N/A	25.0	110.0	109.0	86.0	N/A	25.0	110.0	131.0	104.0
		M	N/A	7.6	12.2	9.4	5.8	N/A	7.6	33.5	33.2	26.2	N/A	7.6	33.5	39.9	31.7
	-20 (-30)	Ft.	N/A	23.0	21.0	13.0	0.0	N/A	25.0	91.0	74.0	54.0	N/A	25.0	110.0	90.0	68.0
		M	N/A	7.0	6.4	4.0	0.0	N/A	7.6	27.7	22.6	16.5	N/A	7.6	33.5	27.4	20.7
	-40 (-40)	Ft.	N/A	13.0	10.0	1.0	0.0	N/A	25.0	68.0	53.0	35.0	N/A	25.0	83.0	66.0	46.0
		M	N/A	4.0	3.0	0.3	0.0	N/A	7.6	20.7	16.2	10.7	N/A	7.6	25.3	20.1	14.0
120000	20 (-10)	Ft.	N/A	N/A	15.0	85.0	73.0	N/A	N/A	15.0	100.0	190.0	N/A	N/A	15.0	100.0	224.0
		M	N/A	N/A	4.6	25.9	22.3	N/A	N/A	4.6	30.5	57.9	N/A	N/A	4.6	30.5	68.3
	0 (-20)	Ft.	N/A	N/A	15.0	41.0	29.0	N/A	N/A	15.0	100.0	109.0	N/A	N/A	15.0	100.0	131.0
		M	N/A	N/A	4.6	12.5	8.8	N/A	N/A	4.6	30.5	33.2	N/A	N/A	4.6	30.5	39.9
	-20 (-30)	Ft.	N/A	N/A	15.0	20.0	7.0	N/A	N/A	15.0	94.0	71.0	N/A	N/A	15.0	114.0	88.0
		M	N/A	N/A	4.6	6.1	2.1	N/A	N/A	4.6	28.7	21.6	N/A	N/A	4.6	34.7	26.8
	-40 (-40)	Ft.	N/A	N/A	15.0	7.0	0.0	N/A	N/A	15.0	69.0	48.0	N/A	N/A	15.0	85.0	62.0
		M	N/A	N/A	4.6	2.1	0.0	N/A	N/A	4.6	21.0	14.6	N/A	N/A	4.6	25.9	18.9

* Not all families have these models.
† Insulation thickness based on R value of 3.5 per in.

RETURN AIR TEMPERATURE

This furnace is designed for continuous return-air minimum temperature of 60°F (15°C) db or intermittent operation down to 55°F (13°C) db such as when used with a night setback thermometer. Return-air temperature must not exceed 80°F (27°C) db. Failure to follow these return air limits may affect reliability of heat exchangers, motors and controls.

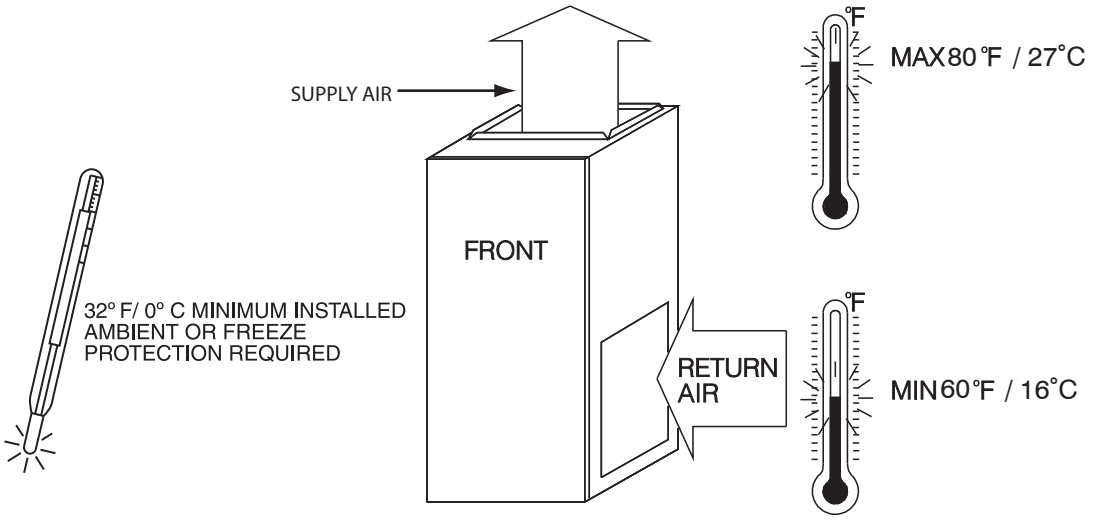

A10490

MINIMUM CLEARANCES TO COMBUSTIBLE MATERIALS

POSITION	CLEARANCE
Rear	0 (0 mm)
Front (Combustion air openings in furnace and in structure)	1 in. (25 mm)
Required for service	*24 in. (610 mm)
All Sides of Supply Plenum	1 in. (25 mm)
Sides	0 (0 mm)
Vent	0 (0 mm)
Top of Furnace	1 in. (25 mm)

* Recommended

COMBUSTION-AIR PIPE FOR NON-DIRECT (1-PIPE) VENT APPLICATION

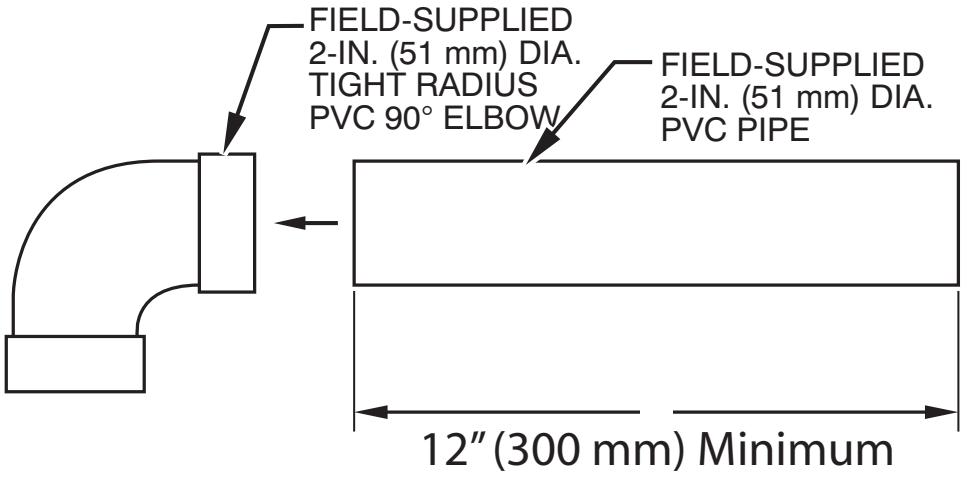

A11487

DOWNFLOW SUBBASE

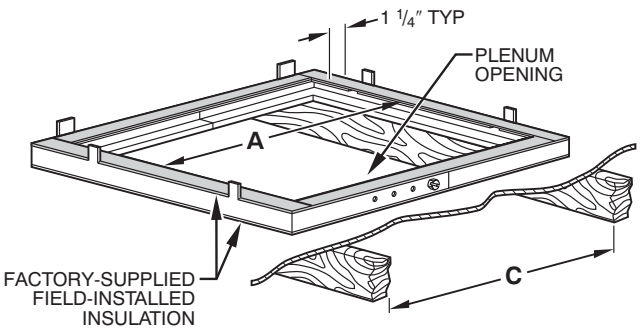

A97427

Assembled

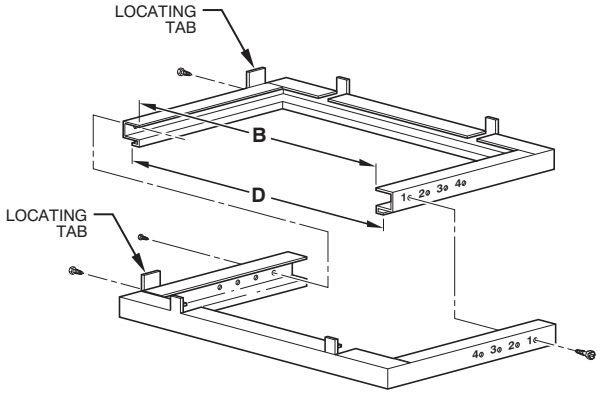

A88207

Disassembled

DIMENSIONS (IN. / MM)						
FURNACE CASING WIDTH	FURNACE IN DOWNFLOW APPLICATION	PLENUM OPENING*		FLOOR OPENING		HOLE NO. FOR WIDTH ADJUSTMENT
		A	B	C	D	
17–1/2 (444.5)	Furnace with or without Cased Coil Assembly or Coil Box	15–1/8 (384.2)	19 (482.6)	16–3/4 (425.5)	20–3/8 (517.5)	3
21 (533.4)	Furnace with or without Cased Coil Assembly or Coil Box	18–5/8 (396.4)	19 (482.6)	20–1/4 (514.4)	20–3/8 (517.5)	2
24–1/2 (622.3)	Furnace with or without Cased Coil Assembly or Coil Box	22–1/8 (562.0)	19 (482.6)	23–3/4 (603.3)	20–3/8 (517.5)	1

*The plenum should be constructed 1/4–in. (6 mm) smaller in width and depth than the plenum dimensions shown above.

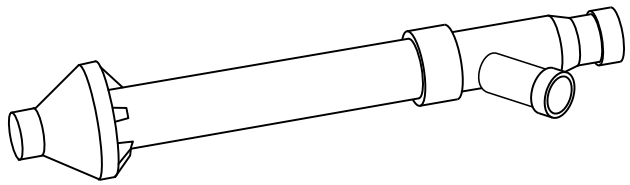

Concentric Vent Kit

A93086

A concentric vent kit allows vent and combustion-air pipes to terminate through a single exit in a roof or side wall. One pipe runs inside the other allowing venting through the inner pipe and combustion air to be drawn in through the outer pipe.

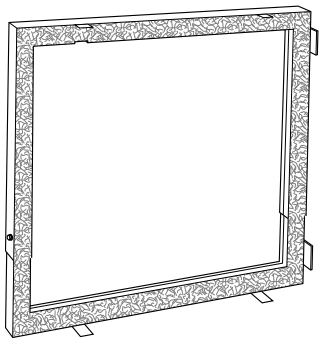

Downflow Subbase

A88202

One base fits all furnace sizes. The base is designed to be installed between the furnace and a combustible floor when no coil box is used or when a coil box other than a Payne cased coil is used. It is CSA design certified for use with Payne branded furnaces when installed in downflow applications.

TYPICAL WIRING SCHEMATIC

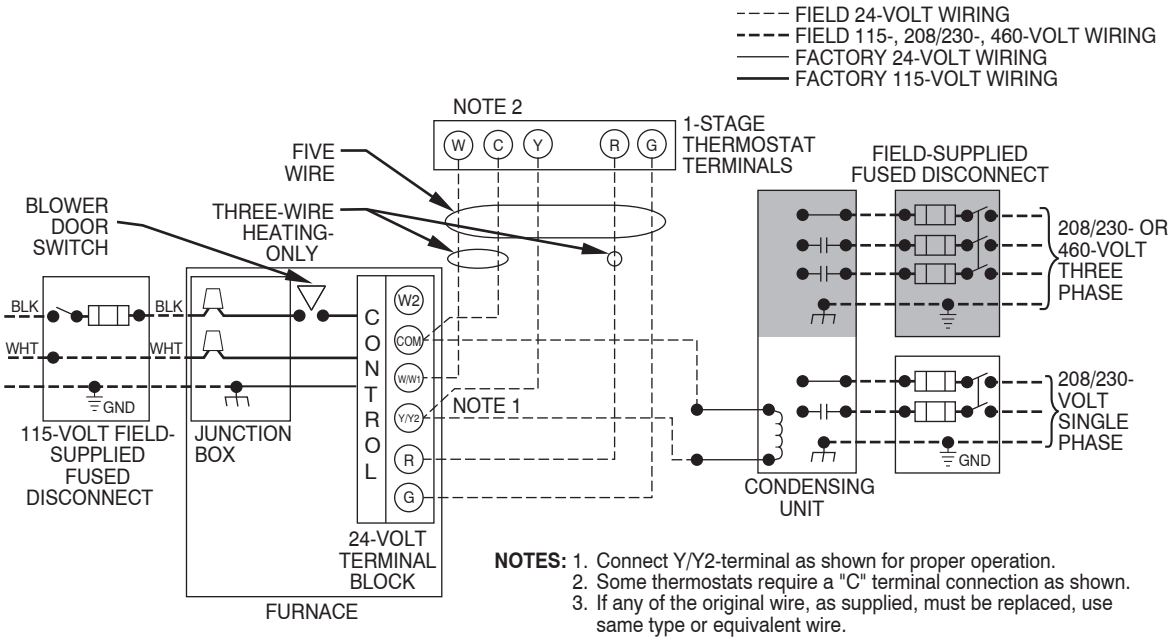

NOTES: 1. Connect Y/Y2-terminal as shown for proper operation.
2. Some thermostats require a "C" terminal connection as shown.
3. If any of the original wire, as supplied, must be replaced, use same type or equivalent wire.

A11401

DIMENSIONAL DRAWING

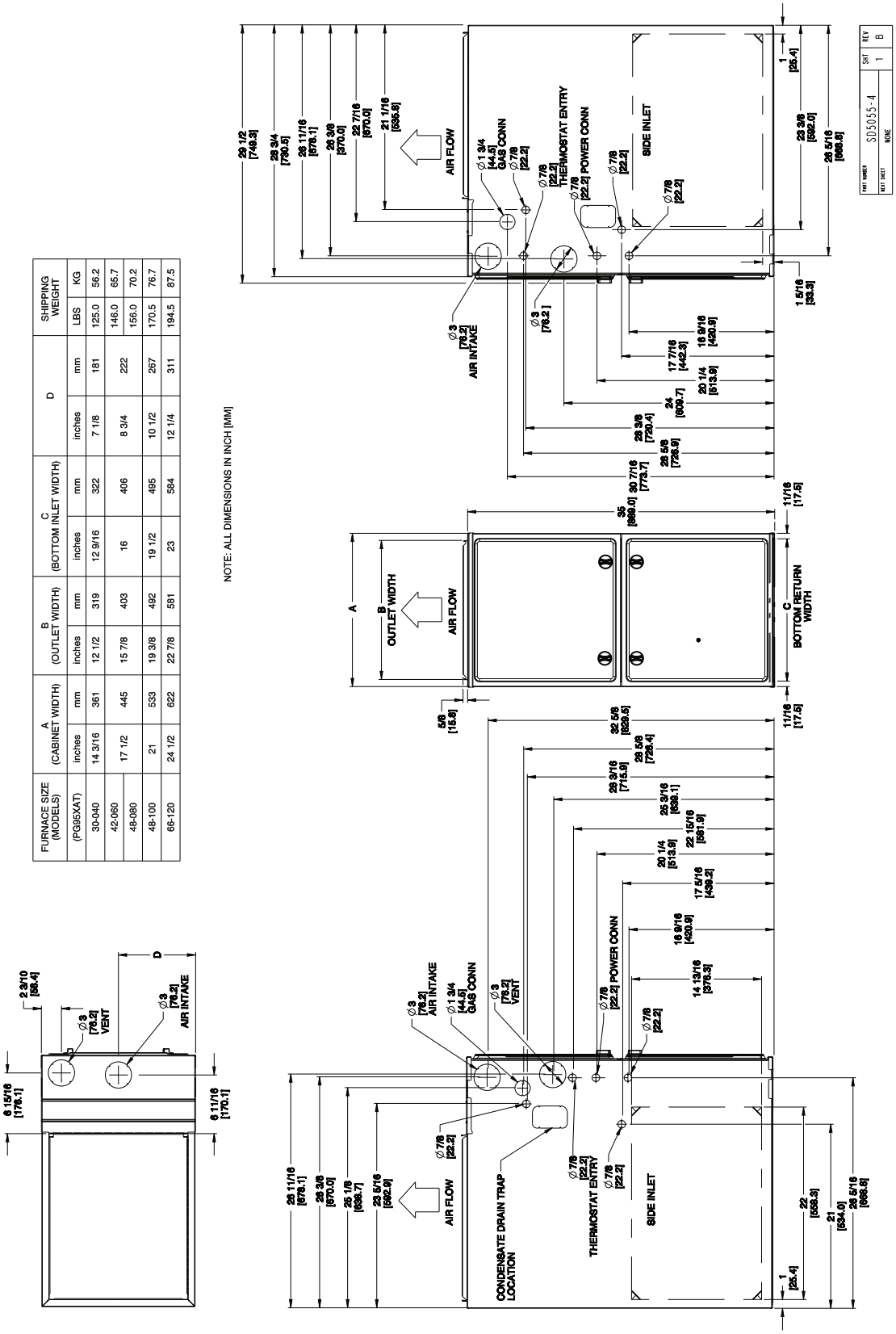

NOTE: ALL DIMENSIONS IN INCH [MM]

FURNACE SIZE (MODELS)	A (CABINET WIDTH)		B (OUTLET WIDTH)		C (BOTTOM INLET WIDTH)		D		SHIPPING WEIGHT	
(PG95XAT)	inches	mm	inches	mm	inches	mm	inches	mm	LBS	KG
30-040	14 3/16	361	12 1/2	319	12 9/16	322	7 1/8	181	125.0	56.2
42-060	17 1/2	445	15 7/8	403	16	406	8 3/4	222	146.0	65.7
48-080									156.0	70.2
48-100	21	533	19 3/8	492	19 1/2	495	10 1/2	267	170.5	76.7
66-120	24 1/2	622	22 7/8	581	23	584	12 1/4	311	194.5	87.5

A11445

NOTE: Doors may vary by model.

a. For 800 CFM – 16 – in. (406 mm) round or 14 1/2 x 12 – in. (368 x 305 mm) rectangle.

b. For 1200 CFM – 20 – in. (508 mm) round or 14 1/2 x 19 1/2 – in. (368 x 495 mm) rectangle.

c. For 1600 CFM – 22 – in. (559 mm) round or 14 1/2 x 22 1/16 – in. (368 x 560mm) rectangle.

d. For airflow requirements above 1800 CFM, see Air Delivery table in Installation Instructions literature for specific use of single side inlets. The use of both side inlets, a combination of 1 side and the bottom, or the bottom only return air openings may be required for airflow requirements above 1800 CFM at 0.5 in. w.c. E.S.P.

GUIDE SPECIFICATIONS

General

System Description

Furnish a _____ 4-way multipoise gas-fired condensing furnace for use with natural gas or propane (factory-authorized conversion kit required for propane); furnish cold air return plenum; furnish external media cabinet for use with accessory media filter or standard filter.

Quality Assurance

Unit will be designed, tested and constructed to the current ANSI Z 21.47/CSA 2.3 design standard for gas-fired central furnaces.

Unit will be third party certified by CSA to the current ANSI Z 21.47/CSA 2.3 design standard for gas-fired central furnaces. Unit will carry the CSA Blue Star® and Blue Flame® labels. Unit efficiency testing will be performed per the current DOE test procedure as listed in the Federal Register.

Unit will be certified for capacity and efficiency and listed in the latest AHRI Consumer's Directory of Certified Efficiency Ratings.

Unit will carry the current Federal Trade Commission Energy Guide efficiency label.

Delivery, Storage, and Handling

Unit will be shipped as single package only and is stored and handled per unit manufacturer's recommendations.

Warranty (for inclusion by specifying engineer)

U.S. and Canada only. Warranty certificate available upon request.

Equipment

Blower Wheel and ECM Blower Motor

Galvanized blower wheel shall be centrifugal type, statically and dynamically balanced. Blower motor of ECM type shall be permanently lubricated with sealed ball bearings, of _____hp, and have multiple speeds from 600-1200 RPM operating only when 24-VAC motor inputs are provided. Blower motor shall be direct drive and soft mounted to the blower scroll to reduce vibration transmission.

Filters

Furnace shall have reusable-type filters. Filter shall be _____ in. (mm) X _____ in. (mm). An accessory highly efficient Media Filter is available as an option. _____ Media Filter.

Casing

Casing shall be of .030 in. thickness minimum, pre-painted galvanized steel.

Draft Inducer Motor

Draft inducer motor shall be two-speed design.

Primary Heat Exchangers

Primary heat exchangers shall be 3-Pass corrosion-resistant aluminized steel of fold-and-crimp sectional design and applied operating under negative pressure.

Secondary Heat Exchangers

Secondary heat exchangers shall be of a stainless steel flow-through of fin-and-tube design and applied operating under negative pressure.

Controls

Controls shall include a micro-processor-based integrated electronic control board with at least 16 service troubleshooting codes displayed via diagnostic flashing LED light on the control, a self-test feature that checks all major functions of the furnace, and a replaceable automotive-type circuit protection fuse. Multiple operational settings available, including blower speeds for low heat, high heat, low cooling, high cooling and continuous fan. Continuous fan speed may be adjusted from the thermostat. Cooling airflow will be selectable between 325 and 400 CFM per ton of air conditioning.

Operating Characteristics

Heating capacity shall be _____ Btuh input; _____ Btuh output capacity.

Fuel Gas Efficiency shall be _____ AFUE.

Air delivery shall be _____ cfm minimum at 0.50 in. W.C.. external static pressure.

Dimensions shall be: depth_____in. (mm); width _____in. (mm); height_____in. (mm) (casing only). Height shall be _____in. (mm) with A/C coil and _____in. (mm) overall with plenum.

Electrical Requirements

Electrical supply shall be 115 volts, 60 Hz, single-phase (nominal). Minimum wire size shall be _____AWG; maximum fuse size of HACR-type designated circuit breaker shall be _____ amps.

Special Features

Refer to section of the product data identifying accessories and descriptions for specific features and available enhancements.

©2011 Payne Heating & Cooling Systems • 7310 W. Morris St. • Indianapolis, IN 46231 Printed in U.S.A. Edition Date: 09/11 **Catalog No: SS−PG95XAT−01**

Manufacturer reserves the right to change, at any time, specifications and designs without notice and without obligations. Replaces: New