PY4G--B, PY4G--E, PY4G--F
14 SEER Single-Packaged Air Conditioner and Gas Furnace System with R-410A Refrigerant
Single Phase 2-5 Nominal Tons (Sizes 24-60)
Three Phase 3-5 Nominal Tons (Sizes 36-60)

Product Data

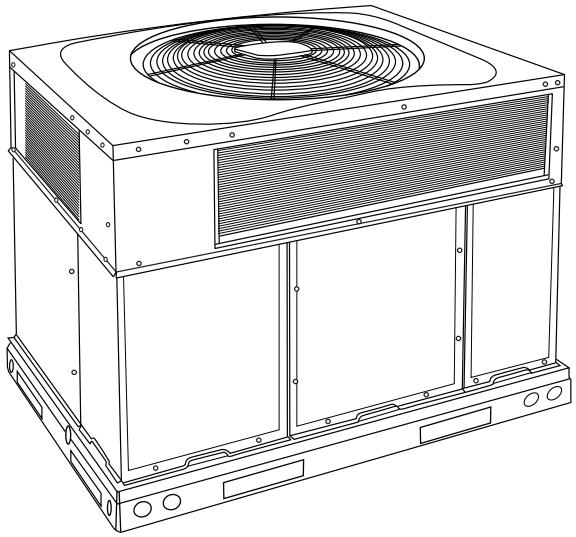

A09183

Fig. 1 – Unit PY4G
(Low NOx Model Available)

Single-Packaged Products with Energy-Saving Features and R-410A refrigerant.

- 14.0 SEER
- 11.5 EER
- 81.0% AFUE (Single phase models)
- ECM Motor-Standard
- Direct Spark Ignition
- Low Sound Levels
- Dehumidification Feature
- Cabinet air leakage of 2.0% or less at .5 in. W.C. when tested in accordance with ASHRAE standard 193. (Low leak FIOP models only.)

Features/Benefits

One-piece heating and cooling units with low sound levels, easy installation, low maintenance, and dependable performance.

Easy Installation

Factory-assembled package is a compact, fully self-contained, combination gas heating/electric cooling unit that is prewired, pre-piped, and pre-charged for minimum installation expense. These units are available in a variety of standard and optional heating/ cooling size combinations with voltage options to meet residential and light commercial requirements. Units are lightweight and install easily on a rooftop or at ground level. The high tech composite base eliminates rust problems associated with ground level applications.

Innovative Unit Base Design

On the inside a high-tech composite material will not rust and incorporates a sloped drain pan which improves drainage and helps inhibit mold, algae and bacterial growth. On the outside metal base rails provide added stability as well as easier handling and rigging.

Convertible duct configuration

Unit is designed for use in either downflow or horizontal applications. Each unit is converted from horizontal to downflow and includes two horizontal duct covers. Downflow operation is provided in the field to allow vertical ductwork connections. The basepan seals on the bottom openings to ensure a positive seal in the vertical airflow mode.

Efficient operation High-efficiency design offers SEER (Seasonal Energy Efficiency Ratios) of 14.0, 11.5 EER, and AFUE (Annual Fuel Utilization Efficiency) ratings up to 81.0%.

Energy-saving, direct spark ignition saves gas by operating only when the room thermostat calls for heating. Standard units are furnished with natural gas controls. A low-cost field installed kit for propane conversion is available for all units.

Low NOx units are designed for California installations and meet 40 ng/J NOx emissions. Can be installed in air quality management districts with a 40 ng/J NOx emissions requirement.

Durable, dependable components

Monoport inshot burners produce precise air-to-gas mixture, which provides for clean and efficient combustion. The large monoport on the inshot (or injection type) burners seldom, if ever, requires cleaning. All gas furnace components are accessible in one compartment.

Turbo-tubular™ heat exchangers are constructed of aluminized steel for corrosion resistance and optimum heat transfer for improved efficiency. The tubular design permits hot gases to make multiple passes across the path of the supply air.

In addition, dimples located on the heat exchanger walls force the hot gases to stay in close contact with the walls, improving heat transfer.

ECM Motor is standard on all models.

Direct-drive PSC (Permanent Split Capacitor) condenser-fan motors are designed to help reduce energy consumption and provide for cooing operation down to 40°F (4.4°C) outdoor temperature. Motormasterr II low ambient kit is available as a field-installed accessory.

Thermostat controls

Time Guard® II anti-short cycle protection circuitry. If a non-corporate thermostat without anti-short cycle protection is used the Time Guard II field-installed anti-short cycle kit is recommended.

Refrigerant system is designed to provide dependability. Liquid filter driers are used to promote clean, unrestricted operation. Each unit leaves the factory with a full refrigerant charge. Refrigerant service connections make checking operating pressures easier.

High Pressure Switch provides added reliability for the compressor.

Low Pressure Switch (24 and 30 size only) provides added reliability for the compressor.

Indoor and Outdoor coils are computer-designed for optimum heat transfer and efficiency. The indoor coil is fabricated from copper tube

and aluminum fins and is located inside the unit for protection against damage. The outdoor coil is internally mounted on the top tier of the unit.

Low sound ratings ensure a quiet indoor and outdoor environment with sound ratings as low as 69dBA.

Easy to service cabinets provide easy 3-panel accessibility to serviceable components during maintenance and installation. The basepan with integrated drain pan provides easy ground level installation with mounting pad. A nesting feature ensures a positive basepan to roof curb seal when the unit is roof mounted. A convenient 3/4-in. (19.05 mm) wide perimeter flange makes frame mounting on a rooftop easy.

Standard horizontal metal duct covers with insulation come with the unit \and cover the horizontal duct openings. These can be left in place if the units are converted to downflow.

Integrated Gas Control (IGC) board provides safe and efficient control of heating and simplifies trouble-shooting through its built-in diagnostic function.

Cabinets are constructed of heavyduty, phosphated, zinc-coated prepainted steel capable of withstanding 500 hours in salt spray. Interior surfaces of the evaporator/heat exchanger compartment are insulated with cleanable semi-rigid insulation board, which keeps the conditioned air from being affected by the outdoor ambient temperature and provides improved indoor air quality. (Conforms to American Society of Heating, Refrigeration and Air Conditioning Engineers 62.2.) The sloped drain pan minimizes standing water in the drain. An external drain is provided.

Table of Contents

Features/Benefits 1
Model Number Nomenclature 2
AHRI Capacities 3
Physical Data 4
Options and Accessories 6
Unit Dimensions 8
Performance Data 12
Application Data 38
Electrical Data 39
Connection Wiring Schematic 208/230-1-60 40
Connection Wiring Schematic 208/230-3-60 44
Connection Wiring Schematic 460-3-60 46
Controls. 48
Guide Specifications 49

Model Number Nomenclature

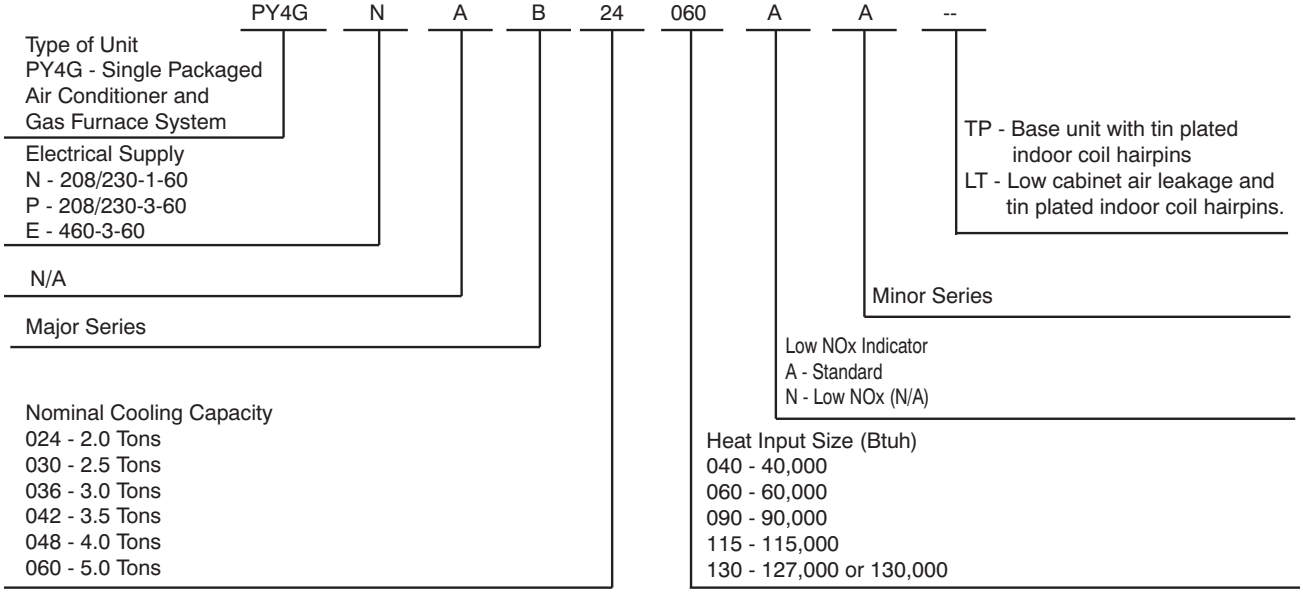

Use of the AHRI Certified TM Mark indicates a manufacturer's participation in the program For verification of certification for individual products, go to www.ahridirectory.org.

For California Residents:
For installation in SCAQMD only: This furnace does not meet the SCAQMD Rule 1111 14ng/J NOx emission limit, and thus is subject to a mitigation fee of up to $450. This furnace is not eligible for the Clean Air Furnace Rebate Program: www.CleanAirFurnaceRebate.com.

AHRI* Capacities

Cooling Capacities and Efficiencies

UNIT SIZE	NOMINAL TONS	STANDARD CFM	COOLING CAPACITY†	EER‡	SEER**
24	2	800	23000	11.5	14.0
30	2.5	1000	28600	11.5	14.0
36	3	1150	34800	11.5	14.0
42	3.5	1350	40000	11.5	14.0
48	4	1550	46000	11.5	14.0
60	5	1750	56000	11.5	14.0

*. Air Conditioning, Heating & Refrigeration Institute.
†. Rated in accordance with U.S. Government DOE Department of Energy) test procedures and/or AHRI Standards 210/240.
‡. At "A" conditions-80°F (26.7°C) indoor db/67°F (19.4°C) indoor wb & 95°F (35°C) outdoor db.
**. Rated in accordance with AHRI Standard 270.
Notes:
1. Ratings are net values, reflecting the effects of circulating fan heat.
Ratings are based on:
Cooling Standard: 80°F (26.7°C) db, 67°F wb (19.4°C) indoor entering-air temperature and 95°F db (35°C) outdoor entering-air temperature.
2. Before purchasing this appliance, read important energy cost and efficiency information available from your retailer.

LEGEND
dB-Sound Levels (decibels)
db—Dry Bulb
SEER—Seasonal Energy Efficiency Ratio
wb—Wet Bulb
COP-Coefficient of Performance

Gas Heating Capacities and Efficiencies, Single Phase Models

UNIT SIZE	HEATING INPUT (Btuh)	OUTPUT CAPACITY (Btuh)	TEMPERATURE RISE RANGE °F (°C)	AFUE (%)
24040 30040	40,000	33,000	25-55 (14-31)	81.0
24060 30060 36060 42060	60,000	49,000	25-55 (14-31)	81.0
36090 42090 48090 60090	90,000	73,000 74,000 74,000 74,000	35-65 (19-36)	81.0
48115 60115	115,000	94,000	30-60 (17-33)	81.0
48130 60130	127,000	104,000	35-65 (19-36)	81.0

LEGEND
AFUE—Annual Fuel Utilization Efficiency
NOTE: Before purchasing this appliance, read important energy cost and efficiency information available from your retailer.

Gas Heating Capacities and Efficiencies, Three Phase Models

UNIT SIZE	HEATING INPUT (Btuh)	OUTPUT CAPACITY (Btuh)	TEMPERATURE RISE RANGE °F (°C)	AFUE (%)
36060 42060	60,000	48,000 47,000	25-55 (14-31)	80.0 78.5
36090 42090 48090 60090	90,000	72,000 73,000 73,000 73,000	35-65 (19-36)	79.3 80.4 80.4 80.4
48115 60115	115,000	93,000	30-60 (17-33)	80.3
48130 60130	130,000	103,000	35-65 (19-36)	78.9

LEGEND
AFUE—Annual Fuel Utilization Efficiency
NOTE: Before purchasing this appliance, read important energy cost and efficiency information available from your retailer.

Manufacturer reserves the right to change, at any time, specifications and designs without notice and without obligations.

A-Weighted Sound Power Level

UNIT SIZE	SOUND RATING (dBA)	TYPICAL OCTAVE BAND SPECTRUM (dB without tone adjustment)						
		125	250	500	1000	2000	4000	8000
24	69	71.5	71.0	64.0	61.3	60.0	57.6	49.0
30	72	76.3	70.5	67.8	64.4	63.8	61.4	54.3
36	72	74.5	71.7	68.9	68.0	62.6	57.9	52.5
42	72	73.0	71.1	68.9	68.4	62.6	57.6	53.2
48	72	75.4	70.7	68.9	67.4	62.6	59.9	56.7
60	72	81.3	72.6	68.2	65.4	62.9	59.0	54.4

NOTE: Tested in accordance with AHRI Standard 270-2008 (not listed in AHRI).

Physical Data

UNIT SIZE	24040	24060	30040	30060	36060	36090	42060	42090
NOMINAL CAPACITY (ton)	2	2	2-1/2	2-1/2	3	3	3-1/2	3-1/2
SHIPPING WEIGHT lb. SHIPPING WEIGHT (kg)	329 149	329 149	361 164	361 164	390 177	390 177	455 206	455 206
COMPRESSOR / QUANTITY	Rotary / 1				Scroll / 1			
REFRIGERANT (R-410A) Quantity lb. Quantity (kg)	 5.3 2.4	 5.3 2.4	 6.0 2.7	 6.0 2.7	 8.2 3.7	 8.2 3.7	 6.2 2.8	 6.2 2.8
REFRIGERANT METERING DEVICE	Orifice				TXV		Orifice	
ORIFICE ID in. / mm	.059 / 1.5	.059 / 1.5	.063 / 1.60	.063 / 1.60	N/A		.073 / 1.85	.073 /1.85
OUTDOOR COIL Rows...Fins/in. Face Area (sq ft)	 1..21 11.9	 1...21 11.9	 1...21 13.6	 1...21 13.6	 1...21 18.8	 1...21 18.8	 1...21 13.6	 1...21 13.6
OUTDOOR FAN Nominal CFM Diameter in. Diameter (mm) Motor Hp (Rpm)	 2500 24 609.6 1/10 (810)	 2500 24 609.6 1/10 (810)	 2700 24 609.6 1/10 (810)	 2700 24 609.6 1/10 (810)	 3200 24 609.6 1/5 (810)	 3200 24 609.6 1/5 (810)	 3600 26 660.4 1/5 (810	 3600 26 660.4 1/5 (810)
INDOOR COIL Rows...Fins/in. Face Area (sq ft)	 3...17 3.7	 3...17 3.7	 3...17 3.7	 3...17 3.7	 3...17 3.7	 3...17 3.7	 3...17 4.7	 3...17 4.7
INDOOR BLOWER Nominal Cooling Airflow (Cfm) Size in. Size (mm.) Motor HP (RPM)	 800 10x10 254x254 1/2 (1050)	 800 10x10 254x254 1/2 (1050)	 1000 10x10 254x254 1/2 (1050)	 1000 10x10 254x254 1/2 (1050)	 1150 11x10 279.4x254 3/4 (1000)	 1150 11x10 279.4x254 3/4 (1000)	 1350 11x10 279.4x254 1/2 (1050)	 1350 11x10 279.4x254 1/2 (1050)
FURNACE SECTION* Burner Orifice No. (Qty...Drill Size) 1 Phase Natural Gas (Factory Installed) 1 Phase Propane Gas 3 Phase Natural Gas (Factory Installed) 3 Phase Propane Gas	 2...44 2...55	 3...44 3...55	 2...44 2...55 2...44 2...55	 3...44 3...55 2...38 2...53	 3...44 3...55 2...38 2...53	 3...38 3...53 3...38 3...53	 3...44 3...55 2...38 2...53	 3...38 3...53 3...38 3...53
HIGH-PRESSURE SWITCH (psig) Cut-out Reset (Auto)	650 +/- 15 420 +/- 25							
LOSS-OF-CHARGE / LOW-PRESSURE SWITCH (Liquid Line) (psig) cut-out Reset (auto)	50 +/- 7 95 +/- 7				N/A			
RETURN-AIR FILTERS†‡ Throwaway Size in. (mm)	2 each 20x12x1 508x305x25						1 each 24x14x1 610x356x25 24x15x1 610x406x25	

*. Based on altitude of 0 to 2000 ft (0-610 m).
†. Required filter sizes shown are based on the larger of the AHRI (Air Conditioning Heating and Refrigeration Institute) rated cooling airflow or the heating airflow velocity of 300 to 350 ft/minute for throwaway type. Air filter pressure drop for non-standard filters must not exceed 0.08 IN. W.C.
‡. If using accessory filter rack refer to the filter rack installation instructions for correct filter sizes and quantity.

Manufacturer reserves the right to change, at any time, specifications and designs without notice and without obligations.

Physical Data

UNIT SIZE	48090	48115	48130	60090	60115	60130
NOMINAL CAPACITY (ton)	4	4	4	5	5	5
SHIPPING WEIGHT lb SHIPPING WEIGHT kg	480 218	480 218	480 218	497 225	497 225	497 225
COMPRESSOR / QUANTITY	Scroll / 1					
REFRIGERANT (R-410A) Quantity lb Quantity (kg.)	 9.2 4.2	 9.2 4.2	 9.2 4.2	 9.8 4.4	 9.8 4.4	 9.8 4.4
REFRIGERANT METERING DEVICE	Orifice					
ORIFICE ID in./mm	.080 / 2.03				.084 / 2.14	
OUTDOOR COIL Rows...Fins/in. Face Area (sq ft)	 1...21 21.4	 1...21 21.4	 1...21 21.4	 1...21 23.3	 1...21 23.3	 1...21 23.3
OUTDOOR FAN Nominal CFM Diameter in. Diameter (mm) Motor Hp (Rpm)	 3600 26 660.4 1/5 (810)	 3600 26 660.4 1/5 (810)	 3600 26 660.4 1/5 (810)	 4200 26 660.4 1/5 (810)	 4200 26 660.4 1/5 (810)	 4200 26 660.4 1/5 (810)
INDOOR COIL Rows...Fins/in. Face Area (sq ft)	 3...17 4.7	 3...17 4.7	 3...17 4.7	 3...17 5.6	 3...17 5.6	 3...17 5.6
INDOOR BLOWER Nominal Cooling Airflow (CFM) Size in. Size (mm) Motor HP (RPM)	 1550 11x10 279.4x254 1.0 (1075)	 1550 11x10 279.4x254 1.0 (1075)	 1550 11x10 279.4x254 1.0 (1075)	 1750 11x10 279.4x254 1.0 (1040)	 1750 11x10 279.4x254 1.0 (1040)	 1750 11x10 279.4x254 1.0 (1040)
FURNACE SECTION* Burner Orifice No. (Qty...Drill Size) 1 & 3 Phase Natural Gas (Factory Installed) 1 & 3 Phase Propane Gas	 3...38 3...53	 3...33 3...51	 3...31 3...49	 3...38 3...53	 3...33 3...51	 3...31 3...49
HIGH-PRESSURE SWITCH (psig) Cut-out Reset (Auto)	650 +/- 15 420 +/- 25					
LOSS-OF CHARGE / LOW-PRESSURE SWITCH (Liquid Line) (psig) cut-out Reset (auto)	N/A					
RETURN-AIR FILTERS Throwaway†‡in. mm	1 each 24x14x1 610x356x25 24x15x1 610x406x25			1 each 24x16x1 610x406x25 24x18x1 610x457x25		

*. *Based on altitude of 0 to 2000 ft (0-610 m).

†. Required filter sizes shown are based on the larger of the AHRI (Air Conditioning Heating and Refrigeration Institute) rated cooling airflow or the heating airflow velocity of 300 to 350 ft/minute for throwaway type. Air filter pressure drop for non-standard filters must not exceed 0.08 IN. W.C.

‡. If using accessory filter rack refer to the filter rack installation instructions for correct filter sizes and quantity.

Manufacturer reserves the right to change, at any time, specifications and designs without notice and without obligations.

Options and Accessories

ITEM	DESCRIPTION	FACTORY INSTALLED OPTION	FIELD INSTALLED ACCESSORY
Coil Options	Base unit with tin plated indoor coil hairpins	X	
Compressor Start Kit	Compressor Start Kit assists compressor start-up by providing additional starting torque on sing phase units only.		X
Corporate Thermostats	Thermostats provide control for the system heating and cooling functions.		X
Crankcase Heater	Crankcase Heater provides anti-floodback protection for low-load cooling applications.		X
Economizer	Horizontal Economizer with solid state controls and barometric relief dampers includes filter racks and provide outdoor air during cooling and reduce compressor operation.		X
	Vertical Economizer with solid state controls and barometric relief dampers includes filter racks and provide outdoor air during cooling and reduce compressor operation.		X
Filter Rack	Filter Rack features easy installation, serviceability, and high-filtering performance for vertical or horizontal applications. Includes 1-in. filter.		X
Flat Roof Curb	14-in. (356 mm) Flat Roof Curb is available for roof mounted applications.		X
Flue Discharge Deflector	Directs flue gas exhaust 90 degrees upward from current discharge.		X
High Altitude Propane Conversion Kit	High Altitude Propane Conversion Kit is for use at 2001 to 6000 ft. (611-1829 m) above sea level. Kit consists of propane gas orifices that compensate for gas heat operation at high altitude.		X
Low Ambient Kit	Low Ambient Kit (Motormaster II Control) allows the use of mechanical cooling down to outdoor temperatures as low as 0°F (-18°C) when properly installed.		X
Manual Outside Air Damper	Manual Outside Air Damper includes hood and filter rack with adjustable damper blade for up to 25% outdoor air.		X
Natural to Propane Gas Conversion Kit	Natural to Propane Gas Conversion Kit allows for conversion from natural gas to propane gas (0-2000 ft) (0-610 m)		X
Propane to Natural Gas Conversion Kit	Propane to Natural Gas Conversion Kit allows for conversion from propane to natural gas for altitudes of 0-2000 ft (0-610 m)		X
Square-to-Round Duct Transition Kit	Square-to-Round Duct Transition Kit enable 24-48 size units to be fitted to 14 in. (356 mm) round ductwork.		X
Time Guard II	Automatically prevents the compressor from restarting for at least 4 minutes and 45 seconds after shutdown of the compressor. Not required when a corporate programmable thermostat is applied or with a RTU-MP control.		X
Louver Metal Outdoor Coil Grilles	Louver Metal Outdoor Coil Grilles provide hail and vandalism protection.		X
Low Cabinet Air Leakage	Cabinet air leakage of 2.0% or less at .5 in. W.C. when tested in accordance with ASHRAE standard 193.	X	
Low Pressure Switch Kit	This kit is designed for use when a low pressure control is desired.		X

Manufacturer reserves the right to change, at any time, specifications and designs without notice and without obligations.

ECONOMIZER

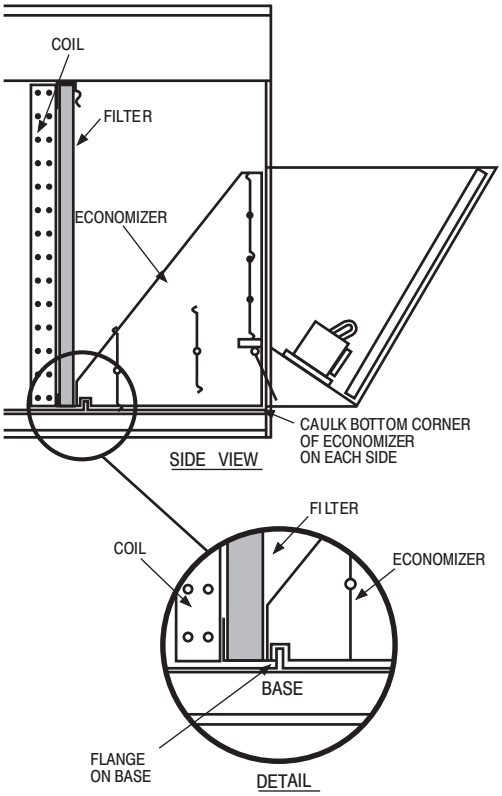

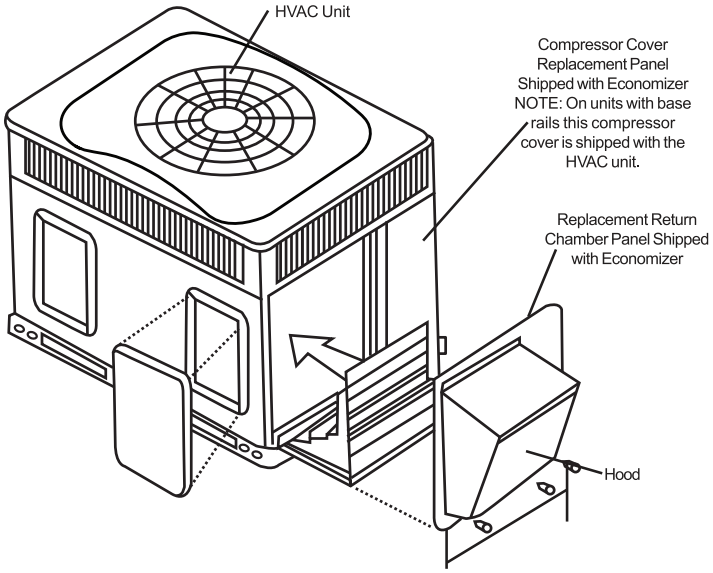

Vertical Economizer

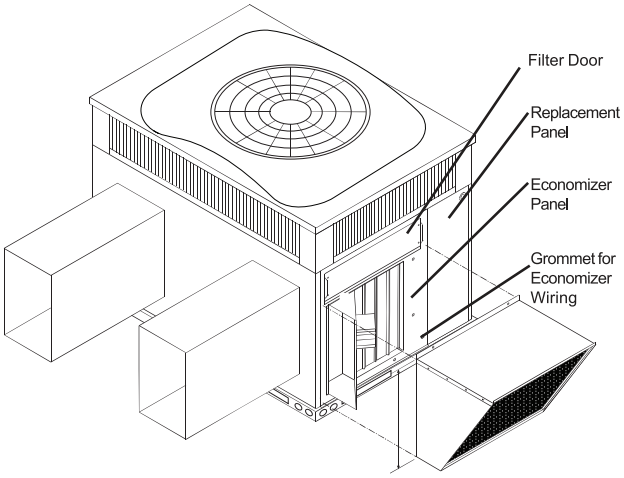

Horizontal Economizer

FILTER RACK

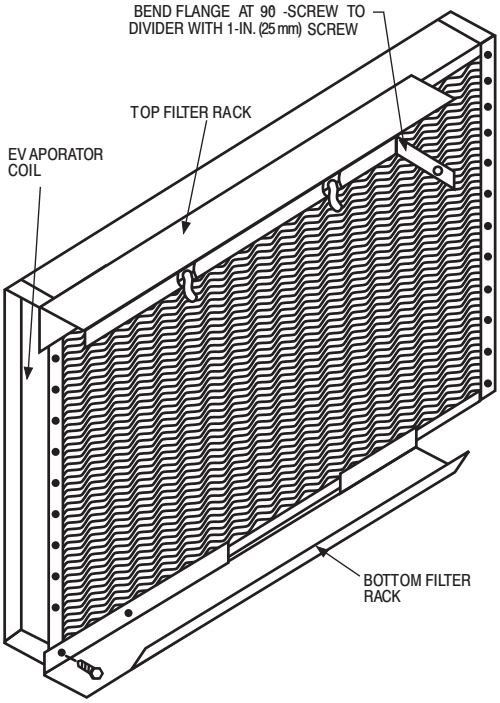

MANUAL OUTSIDE AIR DAMPER

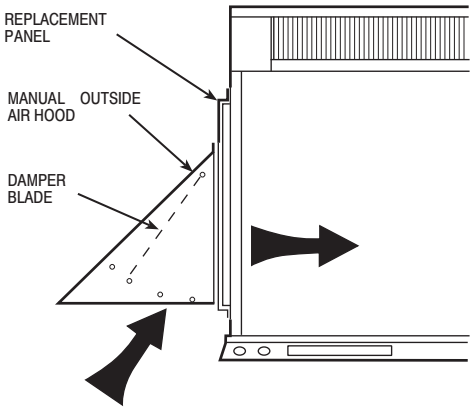

A09375

Unit Dimensions

24-36

UNIT	ELECTRICAL CHARACTERISTICS	UNIT WT.		UNIT HEIGHT IN/MM		CENTER OF GRAVITY IN/MM					
		LB	KG	"A"		X		Y		Z	
PY4GNAE24(040,060)1N/A1A	208/230-1-60	304	138.0	43-3/4	1111	22-13/16	579.4	15-5/16	388.9	15-11/16	398.5
PY4GNAF30(040,060)1N/A1A	208/230-1-60	320	145.0	45-3/4	1162	22-13/16	579.4	15-5/16	388.9	15-13/16	401.6
PY4GNAE36(060,090)1N/A1A	208/230-1-60	349	158.0	51-3/4	1315	22-13/16	579.4	15-5/16	388.9	16-5/8	422.3
PY4GLE,PYAB36(060,090)1(N/A)1A	208/230-3-60, 460-3-60	349	158.0	51-3/4	1315	22-13/16	579.4	15-5/16	388.9	16-5/8	422.3

UNIT	VOLTAGE	CORNER WEIGHT LB/KG							
		"1"		"2"		"3"		"4"	
24	208/230	45.6	20.7	60.8	27.6	91.2	41.4	106.4	48.3
30	208/230	48.0	21.7	64.0	29.0	96.0	43.5	112.0	50.8
36	208/230/460	52.4	23.7	69.8	31.7	104.7	47.5	122.2	55.4

REQUIRED CLEARANCES TO COMBUSTIBLE MAT'L.

	INCHES [MM]
TOP OF UNIT	14 [355.6]
DUCT SIDE OF UNIT	2 [50.8]
SIDE OPPOSITE DUCTS	14 [355.6]
BOTTOM OF UNIT	1/2 [12.7]
FLUE PANEL	36 [914.4]

NEC. REQUIRED CLEARANCES.

	INCHES [MM]
BETWEEN UNITS, POWER ENTRY SIDE	42 [1066.8]
UNIT AND UNGROUNDED SURFACES, POWER ENTRY SIDE	36 [914.0]
UNIT AND BLOCK OR CONCRETE WALLS AND OTHER GROUNDED SURFACES, POWER ENTRY SIDE	42 [1066.8]

REQUIRED CLEARANCE FOR OPERATION AND SERVICING

	INCHES [MM]
EVAP. COIL ACCESS SIDE	36 [914.0]
POWER ENTRY SIDE (EXCEPT FOR NEC REQUIREMENTS)	42 [1066.8]
UNIT TOP	48 [1219.2]
SIDE OPPOSITE DUCTS	36 [914.0]
DUCT PANEL	12 [304.8]*

*MINIMUM DISTANCES:IF UNIT IS PLACED LESS THAN 12 [304.8] FROM WALL SYSTEM,THEN SYSTEM PERFORMANCE MAYBE COMPROMISED.

DIMENSIONS IN [] ARE IN MM

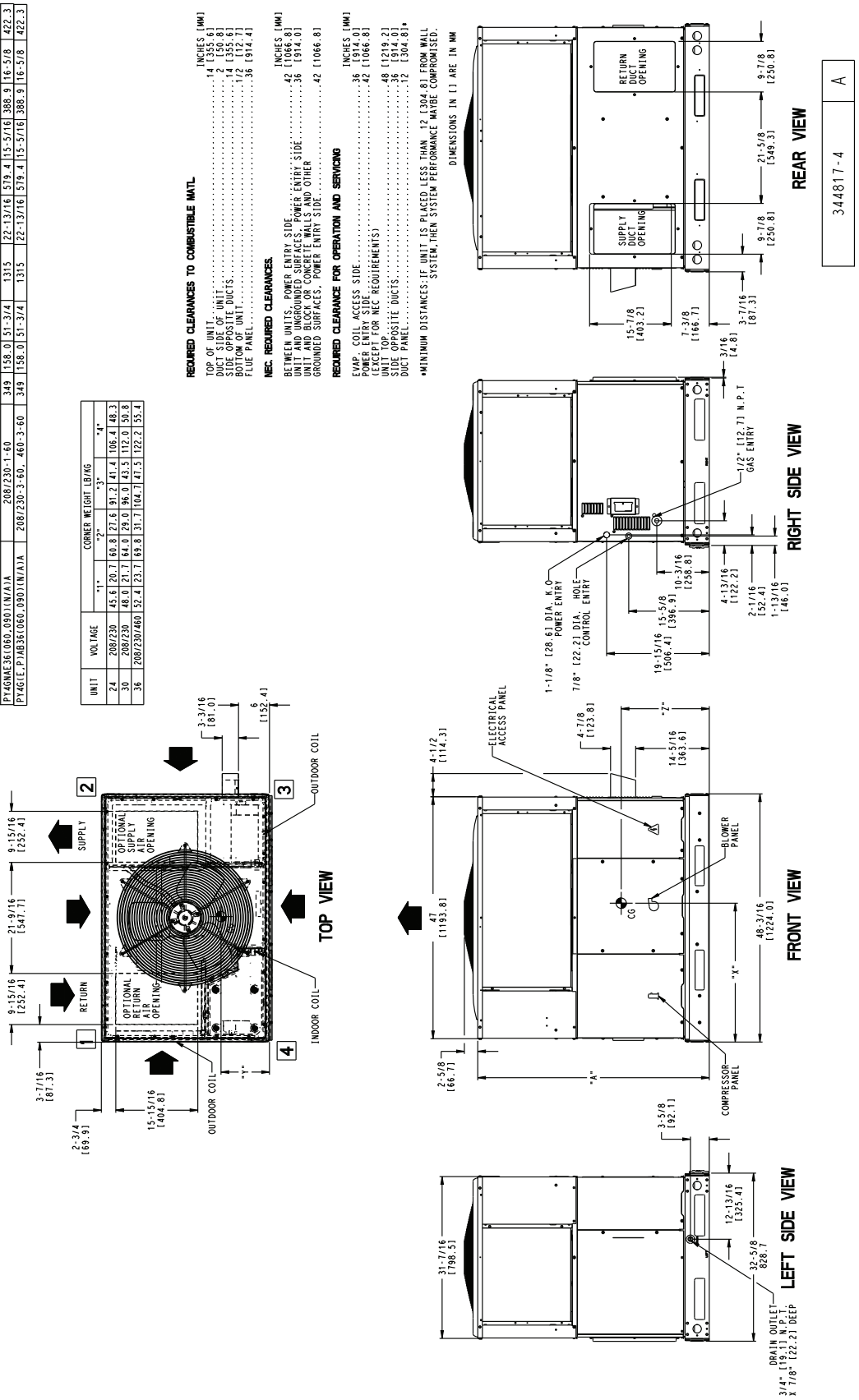

A200010

Unit Dimensions

42-60

UNIT	ELECTRICAL CHARACTERISTICS	UNIT WT.		UNIT HEIGHT IN/MM		CENTER OF GRAVITY IN/MM		
		LB	KG	"A"		X	Y	Z
PY4G(N)AE42(060,090)(N/A)A	208/230-1-60	413	187.0	44-3/4	1137	22 13/16	579.4	18	457.2	17 1/8	435.0
PY4G(N)AE48(090,115,130)(N/A)A	208/230-1-60	438	199.0	52-3/4	1340	22 13/16	579.4	18	457.2	17 3/8	441.3
PY4G(N)AE60(090,115,130)(N/A)A	208/230-1-60	455	206.0	54-3/4	1391	22 13/16	579.4	18	457.2	17 5/8	447.7
PY4G(E,P)AB42(060,090)(N/A)A	208/230-3-60	413	187.0	44-3/4	1137	22 13/16	579.4	18	457.2	17 1/8	435.0
PY4G(E,P)AB48(090,115,130)(N/A)A	208/230-3-60	438	199.0	52-3/4	1340	22 13/16	579.4	18	457.2	17 3/8	441.3
PY4G(E,P)AB60(090,115,130)(N/A)A	208/230-3-60	455	206.0	54-3/4	1391	22 13/16	579.4	18	457.2	17 5/8	447.7

UNIT	VOLTAGE	CORNER WEIGHTS LB/KG				
		1	*2*	*3*	*4*
42	208/230/460	62.0	28.1	82.6	37.5	123.9	56.2	144.6	65.6
48	208/230/460	65.7	29.8	87.6	39.7	131.4	59.6	153.3	69.5
60	208/230/460	68.3	31.0	91.0	41.3	136.5	61.9	159.3	72.2

REQUIRED CLEARANCES TO COMBUSTIBLE MATL.

	INCHES [MM]
TOP OF UNIT	14 [355.6]
DUCT SIDE OF UNIT	2 [50.8]
SIDE OPPOSITE DUCTS	14 [355.6]
BOTTOM OF UNIT	12 [12.7]
FLUE PANEL	36 [914.4]

NEC. REQUIRED CLEARANCES.

	INCHES [MM]
BETWEEN UNITS, POWER ENTRY SIDE	42 [1066.8]
UNIT AND BLOCK OR CONCRETE WALL POWER ENTRY SIDE	36 [914.0]
UNIT AND BLOCK OR CONCRETE WALL OTHER	
GROUNDED SURFACES, POWER ENTRY SIDE	42 [1066.8]

REQUIRED CLEARANCE FOR OPERATION AND SERVICING

	INCHES [MM]
EVAP. COIL ACCESS SIDE	36 [914.4]
POWER ENTRY SIDE	42 [1066.8]
(EXCEPT FOR NEC REQUIREMENTS)	
UNIT TOP	48 [1219.2]
SIDE OPPOSITE DUCTS	36 [914.0]
DUCT PANEL	12 [304.8]*

*MINIMUM DISTANCES: IF UNIT IS PLACED LESS THAN 12 [304.8] FROM WALL SYSTEM, THEN SYSTEM PERFORMANCE MAYBE COMPROMISED.

DIMENSIONS IN [] ARE IN MM

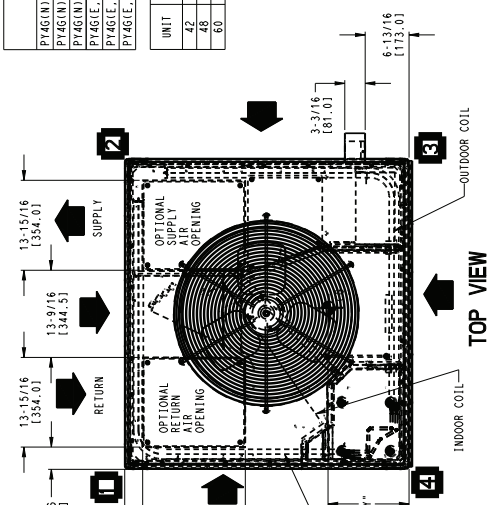

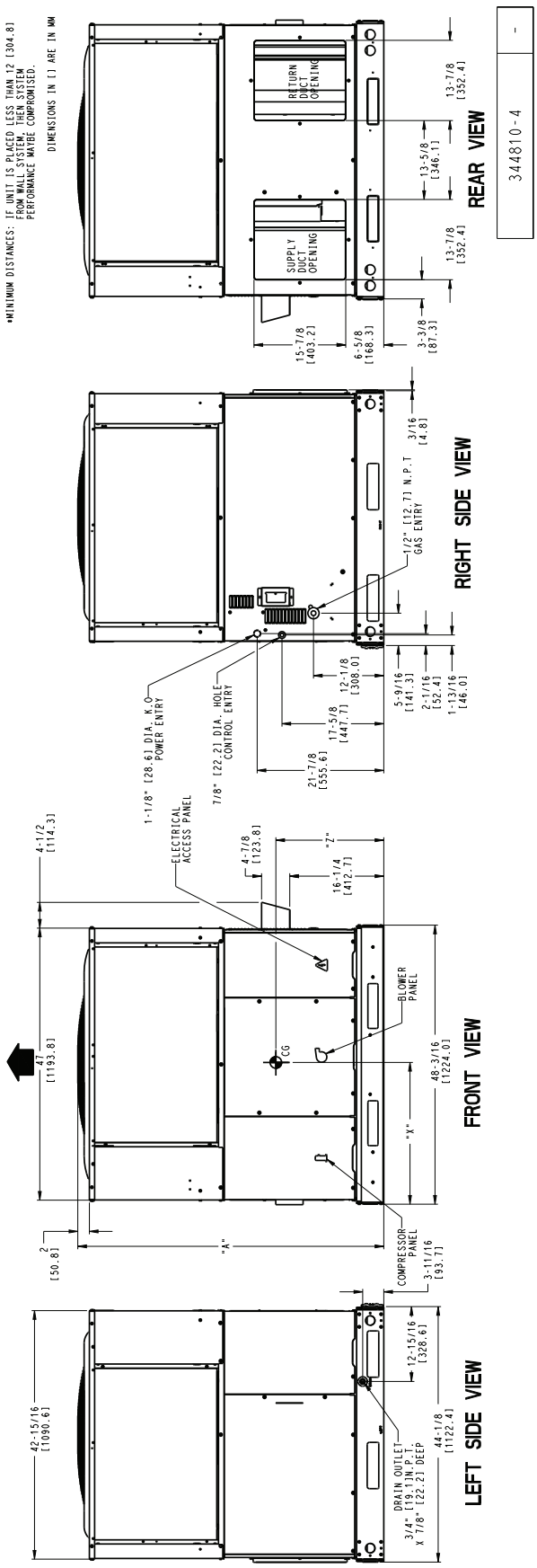

A190122

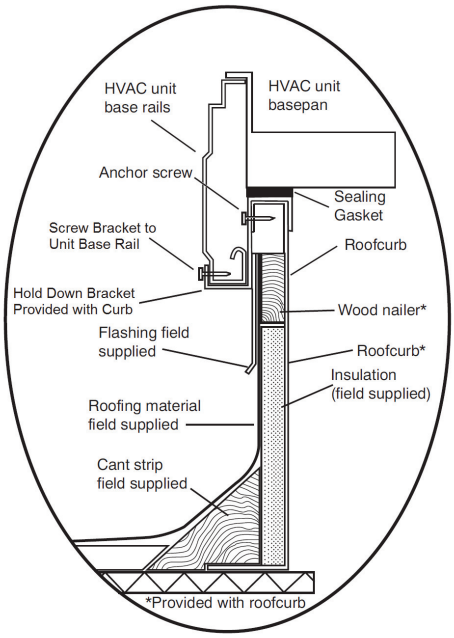

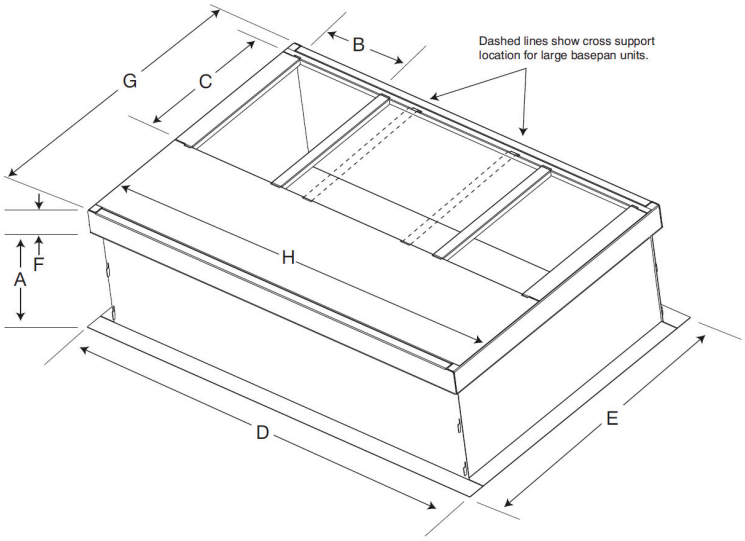

SMALL/COMMON CURB

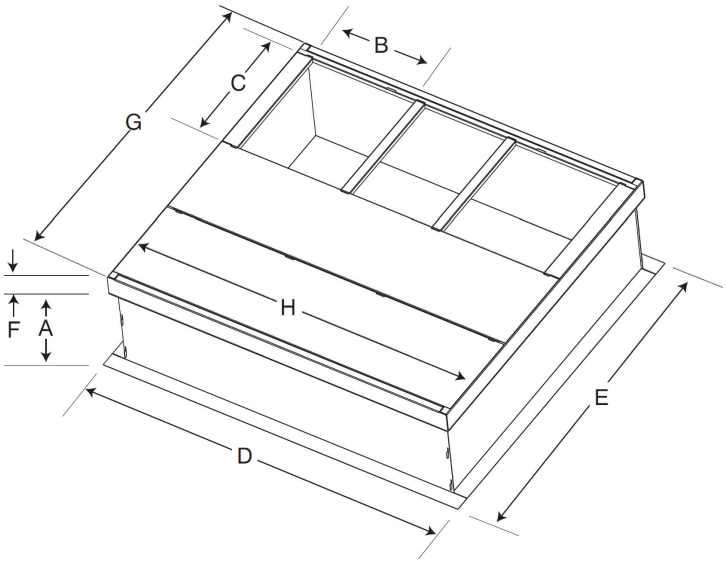

LARGE CURB

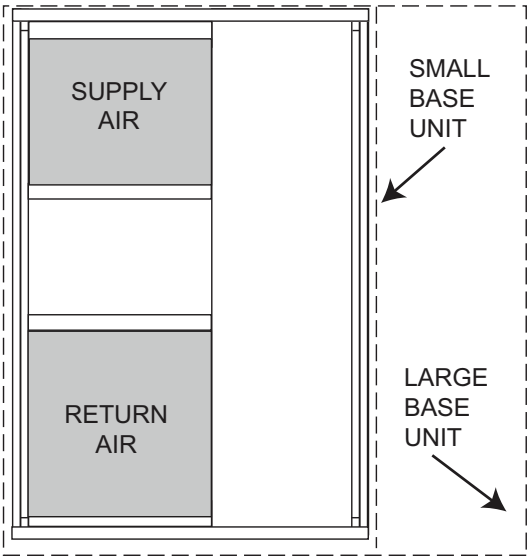

UNIT PLACEMENT ON COMMON CURB

SMALL OR LARGE BASE UNIT

A180216

Accessory Dimensions

UNIT SIZE	CATALOG NUMBER	A IN. (mm)	B (small / common base) IN. (mm)*	B (large base) IN. (mm)*	C IN. (mm)	D IN. (mm)	E IN. (mm)	F IN. (mm)	G IN. (mm)	H IN. (mm)
Small or Large	CPRFCURB011B00	14 (356)	10 (254)	14 (356)	16 (406)	47.8 (1214)	32.4 (822)	2.7 (69)	30.6 (778)	46.1 (1170)
Large	CPRFCURB013B00	14 (356)	14 (356)				43.9 (1116)		42.2 (1072)	

* Part Number CPRCURB011B00 can be used on both small and large basepan units. The cross supports must be located based on whether the unit is a small basepan or a large basepan.

NOTES:

1. Roof curb must be set up for unit being installed.
2. Seal strip must be applied, as required, to unit being installed.
3. Roof curb is made of 16-gauge steel.
4. Attach ductwork to curb (flanges of duct rest on curb).
5. Insulated panels: 1-in. (25.4 mm) thick fiberglass 1 lb. density.

Manufacturer reserves the right to change, at any time, specifications and designs without notice and without obligations.

Selection Procedure (With Example)

DETERMINE COOLING AND HEATING REQUIREMENTS AT DESIGN CONDITIONS:

Given:

Required Cooling Capacity (TC) ..... 34,000 Btuh
Sensible Heat Capacity (SHC) ..... 25,000 Btuh
Required Heating Capacity ..... 60,000 Btuh
Condenser Entering Air Temperature ..... 95°F (35°C)
Indoor-Air Temperature ..... 80°F (26°C) edb 67°F (19°C) ewb
Evaporator Air Quantity ..... 1200 CFM
External Static Pressure ..... 0.100 IN. W.C.
Electrical Characteristics 208-1-60

SELECT UNIT BASED ON REQUIRED COOLING CAPACITY

Enter Net Cooling Capacities table at condenser entering temperature of 95°F (35°C). Unit 036 at 1200 CFM and 67°F (19°C) ewb (entering wet bulb) will provide a total capacity of 34,200 Btuh and a SHC of 27,400 Btuh. Calculate SHC correction, if required, using Note 4 under Cooling Capacities tables.

SELECT HEATING CAPACITY OF UNIT TO PROVIDE DESIGN CONDITION REQUIREMENT.

In the Heating Capacities and Efficiencies table, note that the single phase unit 036090 will provide 73,000 Btuh with an input of 90,000 Btuh.

DETERMINE FAN SPEED AND POWER REQUIREMENTS AT DESIGN CONDITIONS.

Before entering the air delivery tables, calculate the total static pressure required. From the given example, the Wet Coil Pressure Drop Table, and the Filter Pressure Drop Table:

External Static Pressure	0.100 IN. W.C
Filter	0.07 IN. W.C
Wet Coil Pressure Drop	0.180 IN. W.C
Total Static Pressure	0.287 IN. W.C

Enter the table for Dry Coil Air Delivery—Horizontal and Downflow Discharge. At.287 IN. W.C. ESP, the closest speed to 1200 CFM is Med-Low (pink wire), which delivers 1213 CFM at .3 in ESP.

SELECT UNIT THAT CORRESPONDS TO POWER SOURCE AVAILABLE.

The Electrical Data Table shows that the unit is designed to operate at 208-1-60.

Performance Data

24 Size

EVAPORATOR AIR		CONDENSER ENTERING AIR TEMPEREATURES °F (°C)																	
		75 (23.9)			85 (29.4)			95 (35)			105 (40.6)			115 (46.1)			125 (51.7)		
CFM	EWB °F(°C)	Capacity MBtuh		Total Sys KW**	Capacity MBtuh		Total Sys KW**	Capacity MBtuh		Total Sys KW**	Capacity MBtuh		Total Sys KW**	Capacity MBtuh		Total Sys KW**	Capacity MBtuh		Total Sys KW**
		Total	Sens‡		Total	Sens‡		Total	Sens‡		Total	Sens‡		Total	Sens‡		Total	Sens‡	
700	57 (13.8)	23.62	23.62	1.55	21.90	21.90	1.75	20.07	20.07	1.95	17.88	17.88	2.14	15.87	15.87	2.38	14.01	14.01	2.64
	62 (16.6)	24.47	21.38	1.56	22.45	20.24	1.75	20.32	19.02	1.96	17.92	17.92	2.14	15.90	15.90	2.38	14.03	14.03	2.64
	63* (17.2)	24.99	17.43	1.56	22.88	16.39	1.76	20.71	15.32	1.96	18.05	14.06	2.15	15.56	12.87	2.36	13.28	11.77	2.61
	67 (19.4)	27.02	18.13	1.55	24.79	17.09	1.76	22.51	16.03	1.98	19.92	14.86	2.20	17.28	13.67	2.42	14.91	12.59	2.67
	72 (22.2)	29.59	14.70	1.55	27.20	13.77	1.76	24.84	12.86	1.99	22.48	11.95	2.24	19.68	10.89	2.51	17.14	9.92	2.77
800	57 (13.8)	24.74	24.74	1.57	22.92	22.92	1.77	21.02	21.02	1.99	18.78	18.78	2.19	16.65	16.65	2.42	14.70	14.70	2.69
	62 (16.6)	25.14	23.06	1.57	23.07	21.80	1.78	21.05	21.05	1.99	18.81	18.81	2.19	16.68	16.68	2.42	14.72	14.72	2.69
	63* (17.2)	25.59	18.60	1.57	23.43	17.53	1.77	21.18	16.43	1.99	18.51	15.14	2.18	15.93	13.90	2.39	13.61	12.73	2.64
	67 (19.4)	27.63	19.36	1.56	25.32	18.28	1.77	23.00	17.20	2.00	20.41	16.03	2.24	17.67	14.78	2.45	15.25	13.64	2.71
	72 (22.2)	30.16	15.42	1.56	27.69	14.48	1.77	25.27	13.55	2.01	22.88	12.64	2.26	20.12	11.62	2.53	17.47	10.60	2.80
900	57 (13.8)	25.69	25.69	1.58	23.77	23.77	1.79	21.80	21.80	2.01	19.55	19.55	2.23	17.32	17.32	2.46	15.29	15.29	2.73
	62 (16.6)	25.74	25.74	1.58	23.81	23.81	1.79	21.84	21.84	2.01	19.58	19.58	2.23	17.35	17.35	2.46	15.31	15.31	2.73
	63* (17.2)	26.07	19.72	1.58	23.84	18.62	1.79	21.55	17.49	2.01	18.84	16.17	2.20	16.24	14.87	2.42	13.92	13.92	2.67
	67 (19.4)	28.08	20.52	1.58	25.72	19.42	1.79	23.37	18.31	2.02	20.82	17.17	2.26	17.98	15.84	2.48	15.54	14.63	2.74
	72 (22.2)	30.58	16.10	1.58	28.07	15.15	1.79	25.58	14.21	2.02	23.17	13.29	2.28	20.45	12.30	2.56	17.73	11.25	2.83

Performance Data

30 Size

EVAPORATOR AIR		CONDENSER ENTERING AIR TEMPEREATURES °F (°C)														
		75 (23.9)			85 (29.4)			95 (35)			105 (40.6)			115 (46.1)		
CFM	EWB °F(°C)	Capacity MBtuh		Total Sys KW**	Capacity MBtuh		Total Sys KW**	Capacity MBtuh		Total Sys KW**	Capacity MBtuh		Total Sys KW**	Capacity MBtuh		Total Sys KW**
		Total	Sens‡		Total	Sens‡		Total	Sens‡		Total	Sens‡		Total	Sens‡	
875	57 (13.9)	27.39	27.39	1.98	26.29	26.29	2.20	25.01	25.01	2.44	23.52	23.52	2.69	21.57	21.57	2.94
	62 (16.7)	28.22	26.10	1.99	26.84	25.48	2.20	25.28	24.73	2.45	23.38	23.38	2.68	21.59	21.59	2.94
	63* (17.2)	28.70	21.18	1.99	27.33	20.58	2.20	25.77	19.89	2.45	23.74	19.00	2.69	21.18	17.90	2.93
	67 (19.4)	30.96	21.97	2.00	29.59	21.44	2.22	28.06	20.82	2.46	26.21	20.08	2.74	23.74	19.09	3.02
	71 (21.7)	33.22	18.60	2.02	31.86	18.10	2.24	30.33	17.53	2.48	28.62	16.90	2.76	26.55	16.13	3.08
1000	57 (13.9)	28.61	28.61	2.01	27.47	27.47	2.22	26.20	26.20	2.47	24.68	24.68	2.75	22.66	22.66	3.00
	62 (16.7)	28.93	28.00	2.01	27.59	27.35	2.23	26.34	26.18	2.47	24.72	24.72	2.75	22.70	22.70	3.00
	63* (17.2)	29.30	22.46	2.01	27.91	21.89	2.23	26.32	21.22	2.47	24.35	20.38	2.73	21.72	19.26	2.97
	67 (19.4)	31.55	23.29	2.03	30.16	22.79	2.24	28.60	22.20	2.49	26.76	21.49	2.77	24.30	20.55	3.06
	71 (21.7)	33.80	19.48	2.05	32.41	19.01	2.26	30.84	18.46	2.51	29.10	17.84	2.79	27.04	17.11	3.11
1125	57 (13.9)	29.58	29.58	2.03	28.44	28.44	2.25	27.15	27.15	2.50	25.62	25.62	2.78	23.61	23.61	3.06
	62 (16.7)	29.56	29.56	2.03	28.82	27.88	2.25	27.19	27.19	2.50	25.66	25.66	2.78	23.65	23.65	3.06
	63* (17.2)	29.76	23.65	2.04	28.33	23.11	2.25	26.76	22.46	2.50	24.80	21.66	2.77	22.16	20.54	3.01
	67 (19.4)	31.99	24.51	2.05	30.58	24.06	2.27	29.00	23.49	2.51	27.19	22.82	2.79	24.77	21.94	3.11
	71 (21.7)	34.23	20.29	2.07	32.81	19.85	2.29	31.24	19.31	2.54	29.45	18.71	2.82	27.39	18.01	3.13

Performance Data

36 Size

EVAPORATOR AIR		CONDENSER ENTERING AIR TEMPEREATURES °F (°C)																	
		75 (23.9)			85 (29.4)			95 (35)			105 (40.6)			115 (46.1)			125 (51.7)		
CFM	EWB °F(°C)	Capacity MBtuh		Total Sys KW**	Capacity MBtuh		Total Sys KW**	Capacity MBtuh		Total Sys KW**	Capacity MBtuh		Total Sys KW**	Capacity MBtuh		Total Sys KW**	Capacity MBtuh		Total Sys KW**
		Total	Sens‡		Total	Sens‡		Total	Sens‡		Total	Sens‡		Total	Sens‡		Total	Sens‡	
1000	57 (13.8)	34.58	34.58	2.40	32.46	32.46	2.66	30.31	30.31	2.94	28.08	28.08	3.27	25.78	25.78	3.65	23.44	23.44	4.08
	62 (16.6)	36.10	31.44	2.41	33.65	29.92	2.67	31.16	28.38	2.95	28.62	26.75	3.27	26.05	25.03	3.65	23.48	23.48	4.08
	63* (17.2)	36.53	25.60	2.42	34.01	24.25	2.67	31.48	22.90	2.95	28.86	21.49	3.28	26.20	20.05	3.65	23.49	18.58	4.08
	67 (19.4)	39.44	26.70	2.43	36.74	25.34	2.69	34.00	23.95	2.97	31.20	22.53	3.30	28.34	21.07	3.67	25.45	19.58	4.09
	72 (22.2)	43.05	21.95	2.46	40.11	20.71	2.72	37.12	19.45	3.00	34.07	18.16	3.32	30.95	16.85	3.69	27.81	15.51	4.11
1150	57 (13.8)	36.19	36.19	2.46	33.98	33.98	2.71	31.67	31.67	3.00	29.30	29.30	3.32	26.84	26.84	3.70	24.34	24.34	4.12
	62 (16.6)	37.15	33.84	2.46	34.60	32.19	2.72	32.03	30.46	3.00	29.42	29.41	3.32	26.90	26.90	3.70	24.38	24.38	4.12
	63* (17.2)	37.52	27.28	2.47	34.89	25.86	2.72	32.23	24.43	3.01	29.50	22.95	3.33	26.72	21.43	3.70	23.92	19.88	4.12
	67 (19.4)	40.47	28.51	2.48	37.67	27.07	2.74	34.80	25.60	3.03	31.88	24.11	3.35	28.91	22.56	3.72	25.90	20.99	4.14
	72 (22.2)	44.12	23.06	2.51	41.04	21.76	2.77	37.93	20.44	3.06	34.77	19.10	3.38	31.54	17.73	3.74	28.28	16.32	4.16
1300	57 (13.8)	37.56	37.56	2.51	35.24	35.24	2.77	32.79	32.79	3.05	30.30	30.30	3.38	27.71	27.71	3.75	25.08	25.08	4.17
	62 (16.6)	38.06	35.99	2.51	35.47	34.14	2.77	32.84	32.84	3.05	30.34	30.34	3.38	27.75	27.75	3.75	25.12	25.12	4.17
	63* (17.2)	38.23	28.87	2.51	35.57	27.41	2.77	32.80	25.90	3.05	29.99	24.35	3.38	27.14	22.76	3.75	24.25	21.11	4.17
	67 (19.4)	41.26	30.24	2.53	38.33	28.73	2.79	35.38	27.20	3.08	32.36	25.62	3.40	29.31	24.01	3.76	26.22	22.34	4.18
	72 (22.2)	44.94	24.09	2.56	41.77	22.75	2.82	38.55	21.38	3.11	35.28	19.98	3.43	31.96	18.56	3.79	28.62	17.10	4.21

Manufacturer reserves the right to change, at any time, specifications and designs without notice and without obligations.

Performance Data

42 Size

EVAPORATOR AIR		CONDENSER ENTERING AIR TEMPEREATURES °F (°C)																	
		75 (23.9)			85 (29.4)			95 (35)			105 (40.6)			115 (46.1)			125 (51.7)		
CFM	EWB °F(°C)	Capacity MBtuh		Total Sys KW**	Capacity MBtuh		Total Sys KW**	Capacity MBtuh		Total Sys KW**	Capacity MBtuh		Total Sys KW**	Capacity MBtuh		Total Sys KW**	Capacity MBtuh		Total Sys KW**
		Total	Sens‡		Total	Sens‡		Total	Sens‡		Total	Sens‡		Total	Sens‡		Total	Sens‡	
1175	57 (13.8)	38.66	38.66	2.51	36.66	36.66	2.87	34.60	34.60	3.30	32.45	32.45	3.80	30.07	30.07	4.39	27.19	27.19	5.02
	62 (16.6)	40.29	35.16	2.54	37.87	33.90	2.90	35.39	32.59	3.32	32.82	31.18	3.82	30.12	30.12	4.39	27.24	27.24	5.03
	63* (17.2)	41.08	28.70	2.54	38.62	27.55	2.92	36.06	26.34	3.34	33.40	25.10	3.84	30.40	23.73	4.40	26.65	22.06	4.98
	67 (19.4)	44.34	29.79	2.59	41.80	28.66	2.97	39.16	27.52	3.42	36.41	26.33	3.95	33.45	25.06	4.57	29.97	23.59	5.21
	72 (22.2)	48.52	24.17	2.66	45.92	23.18	3.05	43.20	22.16	3.52	40.37	21.10	4.06	37.44	20.00	4.70	34.27	18.84	5.44
1350	57 (13.8)	40.50	40.50	2.58	38.39	38.39	2.95	36.24	36.24	3.40	34.01	34.01	3.92	31.54	31.54	4.51	28.67	28.67	5.17
	62 (16.6)	41.38	37.85	2.59	38.93	36.52	2.96	36.44	36.11	3.41	34.06	34.06	3.92	31.59	31.59	4.52	28.72	28.72	5.17
	63* (17.2)	42.06	30.61	2.60	39.52	29.42	2.97	36.90	28.24	3.41	34.16	26.96	3.92	31.10	25.56	4.49	27.35	23.86	5.08
	67 (19.4)	45.33	31.78	2.64	42.72	30.67	3.03	40.00	29.50	3.48	37.18	28.29	4.01	34.18	27.02	4.64	30.76	25.56	5.32
	72 (22.2)	49.45	25.33	2.72	46.79	24.36	3.12	44.00	23.33	3.58	41.11	22.27	4.13	38.09	21.17	4.78	34.91	20.01	5.52
1525	57 (13.8)	41.99	41.99	2.63	39.82	39.82	3.02	37.59	37.59	3.47	35.28	35.28	4.01	32.78	32.78	4.63	29.92	29.92	5.31
	62 (16.6)	42.32	40.26	2.64	39.90	39.90	3.02	37.64	37.64	3.47	35.33	35.33	4.01	32.82	32.82	4.64	29.97	29.97	5.31
	63* (17.2)	42.81	32.42	2.65	40.22	31.23	3.02	37.53	30.01	3.47	34.76	28.74	3.99	31.66	27.29	4.56	27.97	25.57	5.17
	67 (19.4)	46.08	33.66	2.70	43.40	32.57	3.08	40.64	31.35	3.54	37.75	30.14	4.07	34.73	28.86	4.70	31.38	27.42	5.42
	72 (22.2)	50.14	26.41	2.78	47.44	25.44	3.18	44.60	24.44	3.64	41.64	23.37	4.20	38.57	22.27	4.85	35.35	21.11	5.59

Manufacturer reserves the right to change, at any time, specifications and designs without notice and without obligations.

Performance Data

48 Size

EVAPORATOR AIR		CONDENSER ENTERING AIR TEMPEREATURES °F (°C)																	
		75 (23.9)			85 (29.4)			95 (35)			105 (40.6)			115 (46.1)			125 (51.7)		
CFM	EWB °F(°C)	Capacity MBtuh		Total Sys KW**	Capacity MBtuh		Total Sys KW**	Capacity MBtuh		Total Sys KW**	Capacity MBtuh		Total Sys KW**	Capacity MBtuh		Total Sys KW**	Capacity MBtuh		Total Sys KW**
		Total	Sens‡		Total	Sens‡		Total	Sens‡		Total	Sens‡		Total	Sens‡		Total	Sens‡	
1400	57 (13.8)	45.45	45.45	3.10	42.83	42.83	3.46	40.16	40.16	3.89	37.26	37.26	4.36	33.52	33.52	4.82	29.80	29.80	5.37
	62 (16.6)	47.27	42.17	3.13	44.15	40.29	3.49	41.03	38.39	3.91	37.61	36.29	4.36	33.57	33.57	4.83	29.84	29.84	5.37
	63* (17.2)	48.20	34.32	3.13	45.02	32.66	3.50	41.76	30.98	3.92	38.24	29.20	4.38	33.54	26.93	4.82	28.81	24.65	5.33
	67 (19.4)	52.06	35.63	3.15	48.74	34.02	3.52	45.33	32.35	3.95	41.77	30.64	4.44	37.35	28.63	4.96	32.39	26.38	5.46
	72 (22.2)	56.98	28.79	3.18	53.50	27.36	3.56	49.89	25.89	3.99	46.16	24.36	4.48	42.23	22.80	5.04	37.37	21.00	5.64
1550	57 (13.8)	47.02	47.02	3.17	44.27	44.27	3.54	41.50	41.50	3.96	38.53	38.53	4.44	34.79	34.79	4.92	30.91	30.91	5.46
	62 (16.6)	48.16	44.46	3.17	45.01	42.51	3.55	41.85	40.45	3.97	38.60	38.60	4.44	34.83	34.83	4.92	30.95	30.95	5.46
	63* (17.2)	49.02	35.96	3.18	45.75	34.27	3.55	42.41	32.55	3.98	38.87	30.75	4.45	34.15	28.45	4.89	29.32	26.09	5.40
	67 (19.4)	52.88	37.35	3.20	49.49	35.71	3.57	46.00	34.00	4.00	42.38	32.25	4.49	38.03	30.31	5.04	32.93	27.95	5.53
	72 (22.2)	57.73	29.76	3.23	54.20	28.31	3.61	50.51	26.84	4.04	46.68	25.28	4.53	42.70	23.71	5.09	37.92	21.96	5.70
1800	57 (13.8)	49.14	49.14	3.25	46.25	46.25	3.63	43.34	43.34	4.06	40.29	40.29	4.55	36.55	36.55	5.07	32.46	32.46	5.60
	62 (16.6)	49.49	47.88	3.25	46.34	46.34	3.63	43.39	43.39	4.06	40.34	40.34	4.55	36.60	36.60	5.07	32.49	32.49	5.61
	63* (17.2)	50.04	38.56	3.25	46.70	36.84	3.63	43.27	35.06	4.06	39.66	33.20	4.54	34.96	30.85	5.00	30.05	28.30	5.51
	67 (19.4)	53.94	40.13	3.28	50.43	38.42	3.65	46.85	36.63	4.08	43.16	34.80	4.57	38.95	32.92	5.12	33.66	30.41	5.65
	72 (22.2)	58.67	31.28	3.31	55.06	29.83	3.69	51.26	28.32	4.12	47.34	26.73	4.62	43.27	25.12	5.18	38.61	23.50	5.78

Manufacturer reserves the right to change, at any time, specifications and designs without notice and without obligations.

Performance Data

60 Size

EVAPORATOR AIR		CONDENSER ENTERING AIR TEMPEREATURES °F (°C)																	
		75 (23.9)			85 (29.4)			95 (35)			105 (40.6)			115 (46.1)			125 (51.7)		
CFM	EWB °F(°C)	Capacity MBtuh		Total Sys KW**	Capacity MBtuh		Total Sys KW**	Capacity MBtuh		Total Sys KW**	Capacity MBtuh		Total Sys KW**	Capacity MBtuh		Total Sys KW**	Capacity MBtuh		Total Sys KW**
		Total	Sens‡		Total	Sens‡		Total	Sens‡		Total	Sens‡		Total	Sens‡		Total	Sens‡	
1750	57 (13.8)	57.04	57.04	3.68	53.71	53.71	4.20	50.37	50.37	4.81	46.94	46.94	5.51	42.94	42.94	6.27	38.22	38.22	7.08
	62 (16.6)	58.59	49.98	3.70	54.72	48.26	4.22	50.83	46.41	4.82	47.02	47.02	5.51	43.00	43.00	6.28	38.29	38.29	7.08
	63* (17.2)	59.69	40.44	3.70	55.67	38.90	4.23	51.62	37.32	4.83	47.50	35.70	5.52	42.48	33.69	6.25	36.58	31.27	7.00
	67 (19.4)	64.43	42.04	3.73	60.26	40.56	4.26	56.00	39.00	4.87	51.67	37.39	5.57	47.05	35.71	6.38	41.05	33.47	7.21
	72 (22.2)	70.39	33.58	3.78	66.06	32.25	4.31	61.55	30.87	4.93	56.94	29.39	5.64	52.21	27.88	6.45	47.19	26.29	7.37
2000	57 (13.8)	59.44	59.44	3.78	55.93	55.93	4.31	52.41	52.41	4.92	48.83	48.83	5.62	44.92	44.92	6.44	39.97	39.97	7.26
	62 (16.6)	60.04	53.50	3.78	56.07	56.07	4.31	52.48	52.48	4.92	48.90	48.90	5.62	44.98	44.98	6.44	40.04	40.04	7.26
	63* (17.2)	60.84	43.04	3.78	56.74	41.49	4.31	52.56	39.87	4.92	48.32	38.18	5.62	43.48	36.25	6.39	37.36	33.66	7.13
	67 (19.4)	65.61	44.79	3.81	61.36	43.29	4.34	56.95	41.68	4.96	52.51	40.02	5.66	47.83	38.30	6.47	41.86	36.09	7.35
	72 (22.2)	71.45	35.11	3.87	67.02	33.78	4.40	62.40	32.37	5.02	57.67	30.89	5.73	52.81	29.36	6.55	47.75	27.77	7.47
2250	57 (13.8)	61.37	61.37	3.86	57.76	57.76	4.39	54.09	54.09	5.01	50.36	50.36	5.72	46.38	46.38	6.54	41.44	41.44	7.43
	62 (16.6)	61.42	61.42	3.86	57.83	57.83	4.40	54.15	54.15	5.01	50.42	50.42	5.72	46.44	46.44	6.54	41.51	41.51	7.43
	63* (17.2)	61.75	45.60	3.86	57.57	43.99	4.39	53.29	42.29	5.00	48.99	40.55	5.71	44.27	38.64	6.52	38.08	35.80	7.26
	67 (19.4)	66.46	47.42	3.89	62.10	45.93	4.43	57.67	44.25	5.04	53.13	42.53	5.75	48.44	40.74	6.56	42.58	38.56	7.48
	72 (22.2)	72.23	36.56	3.95	67.73	35.23	4.48	63.02	33.84	5.11	58.17	32.33	5.82	53.23	30.78	6.65	48.12	29.19	7.57

Manufacturer reserves the right to change, at any time, specifications and designs without notice and without obligations.

Performance Data

* At 75°F (24°C) entering dry bulb-Tennessee Valley Authority (TVA) rating conditions; all others at 80°F dry bulb.

‡ Sensible capacities shown are based on 80°F (27°C) entering air at the indoor coil. For sensible capacities at other than 80°F (27°C), deduct 835 Btuh (245 kW) per 1000 CFM (480 L/S) of indoor coil air for each degree below 80°F (27°C), or add 835 Btuh (245 kW) per 1000 CFM (480 L/S) of indoor coil air per degree above 80°F (27°C).

** System KW is total of indoor and outdoor unit kilowatts.

LEGEND

BF— Bypass Factor

edb— Entering Dry---Bulb

Ewb— Entering Wet---Bulb

kW — Total Unit Power Input

SHC— Sensible Heat Capacity (1000 Btuh)

TC — Total Capacity (1000 Btuh) (net)

rh—Relative Humidity

COOLING NOTES:

1. Ratings are net; they account for the effects of the evaporator ---fan motor power and heat.
2. Direct interpolation is permissible. Do not extrapolate.
3. The following formulas may be used:

$$^{t}ldb = {}^{t}edb - \frac{\text{Sensible capacity (Btuh)}}{1.10 \times \text{CFM}}$$

$^{t}lwb =$ Wet-bulb temperature corresponding to enthalpy air leaving evaporator coil (^{h}lwb)

$$^{h}lwb = {}^{h}ewb - \frac{\text{total capacity (Btuh)}}{(4.5 \times \text{CFM})}$$

Where: ^{h}ewb = Enthalpy of air entering evaporator coil

4. The SHC is based on 80°F (26.6°C) edb temperature of air enteringevaporator coil. Below 80°F (26.6°C) edb, subtract (corr factor x cfm) from SHC.
Above 80°F (26.6°C) edb, add (corr factor x cfm) to SHC.
Correction Factor = 1.10 x (1 + BF) x (edb --- 80).
5. Integrated capacity is maximum (instantaneous) capacity less the effect of frost on the outdoor coil and the heat required to defrost it.

Manufacturer reserves the right to change, at any time, specifications and designs without notice and without obligations.

Gas Adjustment

Natural Gas Orifice Sizes and Manifold Pressure - Single Phase Models

Nameplate Input (Btu/hr)		ALTITUDE OF INSTALLATION (FT. ABOVE SEA LEVEL) U.S.A.*				
		0 to 2000 (0-610 m)	2001 to 3000* (611 to 914 m)	3001 to 4000 (915 to 1219 m)	4001 to 5000 (1220 to 1524 m)	5001 to 6000 (1524 to 1829 m)
40000	Orifice No. (Qty)	44 (2)	45 (2)†	48(2)†	48 (2)†	48 (2)†
	Manifold Press. (in. W.C.)	3.2	3.2	3.8	3.5	3.2
60000	Orifice No. (Qty)	44 (2)	45 (2)†	48 (2)†	48 (2)†	48 (2)†
	Manifold Press. (in. W.C.)	3.2	3.2	3.8	3.5	3.2
90000	Orifice No. (Qty)	38 (3)	41 (3)†	41 (3)†	42 (3)†	42 (3)†
	Manifold Press. (in. W.C.)	3.6	3.8	3.4	3.4	3.2
115000	Orifice No. (Qty)	33 (3)	36 (3)†	36 (3)†	36 (3)†	38 (3)†
	Manifold Press. (in. W.C.)	3.8	3.8	3.6	3.3	3.6
1127000	Orifice No. (Qty)	31 (3)	31 (3)	33 (3)†	33 (3)†	34 (3)†
	Manifold Press. (in. W.C.)	3.7	3.2	3.5	3.2	3.2

*. In the U.S.A., the input rating for altitudes above 2000 ft (610m) must be reduced by 4% for each 1000 ft (305 m) above sea level.
In Canada, the input rating for altitudes from 2001 to 4500 ft (611 to 1372 m) above sea level must be derated by 10% by an authorized gas conversion station or dealer.
For Canadian Installations from 2000 to 4500 ft (610-1372 m), use U.S.A. column 2001 to 3000 ft (611 to 914 m).
†. Orifices available through your distributor.
NOTE: Orifice sizes and manifold pressure settings are based on natural gas with a heating value of 1025 Btu/ft^3 and a specific gravity of .6.

Natural Gas Orifice Sizes and Manifold Pressure - Three Phase Models

Nameplate Input (Btu/hr)		ALTITUDE OF INSTALLATION (FT. ABOVE SEA LEVEL) U.S.A.*				
		0 to 2000 (0-610 m)	2001 to 3000* (611 to 914 m)	3001 to 4000 (915 to 1219 m)	4001 to 5000 (1220 to 1524 m)	5001 to 6000 (1524 to 1829 m)
40000	Orifice No. (Qty)	44 (2)	45 (2)†	48(2)†	48 (2)†	48 (2)†
	Manifold Press. (in. W.C.)	3.2	3.2	3.8	3.5	3.2
60000	Orifice No. (Qty)	38 (2)	41 (2)†	41 (2)†	42 (2)†	42 (2)†
	Manifold Press. (in. W.C.)	3.6	3.8	3.4	3.4	3.2
90000	Orifice No. (Qty)	38 (3)	41 (3)†	41 (3)†	42 (3)†	42 (3)†
	Manifold Press. (in. W.C.)	3.6	3.8	3.4	3.4	3.2
115000	Orifice No. (Qty)	33 (3)	36 (3)†	36 (3)†	36 (3)†	38 (3)†
	Manifold Press. (in. W.C.)	3.8	3.8	3.6	3.3	3.6
130000	Orifice No. (Qty)	31 (3)	31 (3)	33 (3)†	33 (3)†	34 (3)†
	Manifold Press. (in. W.C.)	3.8	3.2	3.7	3.4	3.3

*. In the U.S.A., the input rating for altitudes above 2000 ft (610m) must be reduced by 4% for each 1000 ft (305 m) above sea level.
In Canada, the input rating for altitudes from 2001 to 4500 ft (611 to 1372 m) above sea level must be derated by 10% by an authorized gas conversion station or dealer.
For Canadian Installations from 2000 to 4500 ft (610-1372 m), use U.S.A. column 2001 to 3000 ft (611 to 914 m).
†. Orifices available through your distributor.
NOTE: Orifice sizes and manifold pressure settings are based on natural gas with a heating value of 1025 Btu/ft^3 and a specific gravity of .6.

Propane Gas Orifice Sizes and Manifold Pressure - Single Phase Models

Nameplate Input (Btu/hr)		ALTITUDE OF INSTALLATION (FT. ABOVE SEA LEVEL) U.S.A.*†				
		0 to 2000 (0-610 m)	2001 to 3000* (611 to 914 m)	3001 to 4000 (915 to 1219 m)	4001 to 5000 (1220 to 1524 m)	5001 to 6000 (1524 to 1829 m)
40000	Orifice No. (Qty)	55 (2)	56 (2)	56 (2)	56 (2)	56 (2)
	Manifold Press. (in. W.C.)	10.0	11.0	11.0	11.0	10.7
60000	Orifice No. (Qty)	55 (3)	56 (3)	56 (3)	56 (3)	54 (3)
	Manifold Press. (in. W.C.)	10.0	11.0	11.0	11.0	11.7
90000	Orifice No. (Qty)	53 (3)	54 (3)	54 (3)	54 (3)	54 (3)
	Manifold Press.(in. W.C.)	10.0	11.0	11.0	11.0	11.0
115000	Orifice No. (Qty)	51 (3)	52 (3)	52 (3)	53 (3)	53 (3)
	Manifold Press. (in. W.C.)	10.0	11.0	10.6	11.0	11.0
127000	Orifice No. (Qty)	49 (3)	50 (3)	51 (3)	52 (3)	52 (3)
	Manifold Press. (in. W.C.)	10.0	11.0	11.0	11.0	11.0

*. In the U.S.A., the input rating for altitudes above 2000 ft (610m) must be reduced by 4% for each 1000 ft (305 m) above sea level.
In Canada, the input rating for altitudes from 2001 to 4500 ft (611 to 1372 m) above sea level must be derated by 10% by an authorized gas conversion station or dealer.
For Canadian Installations from 2000 to 4500 ft (610-1372 m), use U.S.A. column 2001 to 3000 ft (611 to 914 m).
†. Use Kit No. CPLPCONV013*00 (0-2000 ft [0-610 m] above sea level). Use Kit No. CPLPCONV014*00 (2001-6000 ft [611-1829 m] above sea level).

Propane Gas Orifice Sizes and Manifold Pressure - Three Phase Models

Nameplate Input (Btu/hr)		ALTITUDE OF INSTALLATION (FT. ABOVE SEA LEVEL) U.S.A.* †				
		0 to 2000 (0-610 m)	2001 to 3000* (611 to 914 m)	3001 to 4000 (915 to 1219 m)	4001 to 5000 (1220 to 1524 m)	5001 to 6000 (1524 to 1829 m)
40000	Orifice No. (Qty)	55 (2)	56 (2)	56 (2)	56 (2)	56 (2)
	Manifold Press. (in. W.C.)	10.0	11.0	11.0	11.0	10.7
60000	Orifice No. (Qty)	53 (2)	54 (2)	54 (2)	54 (2)	54 (2)
	Manifold Press. (in. W.C.)	10.0	11.0	11.0	11.0	11.0
90000	Orifice No. (Qty)	53 (3)	54 (3)	54 (3)	54 (3)	54 (3)
	Manifold Press. (in. W.C.)	10.0	11.0	11.0	11.0	11.0
115000	Orifice No. (Qty)	51 (3)	52 (3)	52 (3)	53 (3)	53 (3)
	Manifold Press. (in. W.C.)	10.0	11.0	10.6	11.0	11.0
130000	Orifice No. (Qty)	49 (3)	50 (3)	51 (3)	52 (3)	52 (3)
	Manifold Press. (in. W.C.)	10.0	11.0	11.0	11.0	11.0

*. In the U.S.A., the input rating for altitudes above 2000 ft (610m) must be reduced by 4% for each 1000 ft (305 m) above sea level.
In Canada, the input rating for altitudes from 2001 to 4500 ft (611 to 1372 m) above sea level must be derated by 10% by an authorized gas conversion station or dealer.
For Canadian Installations from 2000 to 4500 ft (610-1372 m), use U.S.A. column 2001 to 3000 ft (611 to 914 m).
†. Use Kit No. CPLPCONV013*00 (0-2000 ft [0-610 m] above sea level). Use Kit No. CPLPCONV014*00 (2001-6000 ft [611-1829 m] above sea level).

Manufacturer reserves the right to change, at any time, specifications and designs without notice and without obligations.

High Altitude Compensation, Propane Gas - Single Phase Models

Nameplate Input (Btu/hr)	Rated Heating Input (Btu/hr), LP Gas at Installation Altitude Above Sea Level, U.S.A.*				
	0 to 2000 ft (0-610 m)	2001 to 3000 ft* (611 to 914 m)	3001 to 4000 ft (915 to 1219 m)	4001 to 5000 ft (1220 to 1524 m)	5001 to 6000 ft (1524 to 1829 m)
40000	38000	31700	31700	31700	31200
60000	57000	47500	47500	47500	46900
90000	79000	68900	68900	68600	68600
115000	103000	100400	98900	83000	83000
127000	116000	115500	111800	101300	100400

*. In the U.S.A., the input rating for altitudes above 2000 ft (610m) must be reduced by 4% for each 1000 ft (305 m) above sea level.
In Canada, the input rating for altitudes from 2001 to 4500 ft (611 to 1372 m) above sea level must be derated by 10% by an authorized gas conversion station or dealer.
For Canadian Installations from 2000 to 4500 ft (610-1372 m), use U.S.A. column 2001 to 3000 ft (611 to 914 m).

High Altitude Compensation, Propane Gas - Three Phase Models

Nameplate Input (Btu/hr)	Rated Heating Input (Btu/hr), LP Gas at Installation Altitude Above Sea Level, U.S.A.*				
	0 to 2000 ft (0-610 m)	2001 to 3000 ft* (611 to 914 m)	3001 to 4000 ft (915 to 1219 m)	4001 to 5000 ft (1220 to 1524 m)	5001 to 6000 ft (1524 to 1829 m)
40000	38000	31700	31700	31700	31200
60000	57000	45900	45900	45800	45800
90000	79000	68900	68900	68600	68600
115000	103000	100400	98900	83000	83000
130000	116000	115500	111800	101300	100400

*. In the U.S.A., the input rating for altitudes above 2000 ft (610m) must be reduced by 4% for each 1000 ft (305 m) above sea level.
In Canada, the input rating for altitudes from 2001 to 4500 ft (611 to 1372 m) above sea level must be derated by 10% by an authorized gas conversion station or dealer.
For Canadian Installations from 2000 to 4500 ft (610-1372 m), use U.S.A. column 2001 to 3000 ft (611 to 914 m).

High Altitude Compensation, Natural Gas - Single Phase Models

Nameplate Input (Btu/hr)	Rated Heating Input (Btu/hr), Natural Gas at Installation Altitude Above Sea Level, U.S.A.**				
	0 to 2000 ft (0-610 m)	2001 to 3000 ft* (611 to 914 m)	3001 to 4000 ft (915 to 1219 m)	4001 to 5000 ft (1220 to 1524 m)	5001 to 6000 ft (1524 to 1829 m)
40000	40000	36000	34400	32800	31200
60000	60000	54000	51600	49200	46800
90000	90000	81000	77400	73800	70200
115000	115000	103500	98900	94300	89700
127000	127000	114300	109200	104100	99100

*. In the U.S.A., the input rating for altitudes above 2000 ft (610m) must be reduced by 4% for each 1000 ft (305 m) above sea level.
In Canada, the input rating for altitudes from 2001 to 4500 ft (611 to 1372 m) above sea level must be derated by 10% by an authorized gas conversion station or dealer.
For Canadian Installations from 2000 to 4500 ft (610-1372 m), use U.S.A. column 2001 to 3000 ft (611 to 914 m).

High Altitude Compensation, Natural Gas - Three Phase

Nameplate Input (Btu/hr)	Rated Heating Input (Btu/hr), Natural Gas at Installation Altitude Above Sea Level, U.S.A.*				
	0 to 2000 ft (0-610 m)	2001 to 3000 ft* (611 to 914 m)	3001 to 4000 ft (915 to 1219 m)	4001 to 5000 ft (1220 to 1524 m)	5001 to 6000 ft (1524 to 1829 m)
40000	40000	36000	34400	32800	31200
60000	60000	54000	51600	49200	46800
90000	90000	81000	77400	73800	70200
115000	115000	103500	98900	94300	89700
130000	130000	117000	111800	106600	101400

*. In the U.S.A., the input rating for altitudes above 2000 ft (610m) must be reduced by 4% for each 1000 ft (305 m) above sea level.
In Canada, the input rating for altitudes from 2001 to 4500 ft (611 to 1372 m) above sea level must be derated by 10% by an authorized gas conversion station or dealer.
For Canadian Installations from 2000 to 4500 ft (610-1372 m), use U.S.A. column 2001 to 3000 ft (611 to 914 m).

Manufacturer reserves the right to change, at any time, specifications and designs without notice and without obligations.

Dry Coil Air Delivery* - Horizontal and Downflow Discharge Sizes 24-60 208/230VAC - 1 Phase

Unit Size	Heating Rise °F (°C)	Motor Speed	Tap	Allowable Functions	ESP (in. W.C.)	0.1	0.2	0.3	0.4	0.5	0.6	0.7	0.8	0.9	1
24040	25 - 55 (14 - 31)	Low†	Blue	Alternate Heating	CFM	654	552	454	338	x	x	x	x	x	x
					BHP	0.09	0.10	0.10	0.11	x	x	x	x	x	x
					Gas Heat Rise (°F)	45	54	NA	NA	NA	NA	NA	NA	NA	NA
					Gas Heat Rise (°C)	25	30	NA	NA	NA	NA	NA	NA	NA	NA
		Med-Low‡	Pink	Heating Alternate Cooling	CFM	840	759	677	600	505	411	293	x	x	x
					BHP	0.14	0.15	0.16	0.16	0.17	0.17	0.18	x	x	x
					Gas Heat Rise (°F)	35	39	44	50	NA	NA	NA	NA	NA	NA
					Gas Heat Rise (°C)	20	22	24	28	NA	NA	NA	NA	NA	NA
		Medium**	Red	Cooling Alternate Heating	CFM	888	818	750	679	606	511	425	320	238	x
					BHP	0.18	0.18	0.19	0.19	0.20	0.20	0.21	0.21	0.22	x
					Gas Heat Rise (°F)	34	36	40	44	49	NA	NA	NA	NA	NA
					Gas Heat Rise (°C)	19	20	22	24	27	NA	NA	NA	NA	NA
		Med-High	Orange	Alternate Cooling Alternate Heating	CFM	1133	1069	995	930	854	784	701	628	549	464
					BHP	0.26	0.27	0.28	0.29	0.30	0.30	0.31	0.31	0.32	0.33
					Gas Heat Rise (°F)	26	28	30	32	35	38	42	47	54	NA
					Gas Heat Rise (°C)	15	15	17	18	19	21	24	26	30	NA
		High	Black	High Static Cooling Only	CFM	1291	1241	1190	1131	1081	1028	949	854	742	616
					BHP	0.41	0.42	0.43	0.43	0.44	0.45	0.44	0.42	0.40	0.38
24060	25 - 55 (14 - 31)	Low†	Blue		CFM	654	552	454	338	x	x	x	x	x	x
					BHP	0.09	0.10	0.10	0.11	x	x	x	x	x	x
					Gas Heat Rise (°F)	NA	NA	NA	NA	NA	NA	NA	NA	NA	NA
					Gas Heat Rise (°C)	NA	NA	NA	NA	NA	NA	NA	NA	NA	NA
		Med-Low	Pink	Alternate Cooling Alternate Heating	CFM	840	759	677	600	505	411	293	x	x	x
					BHP	0.14	0.15	0.16	0.16	0.17	0.17	0.18	x	x	x
					Gas Heat Rise (°F)	53	NA	NA	NA	NA	NA	NA	NA	NA	NA
					Gas Heat Rise (°C)	30	NA	NA	NA	NA	NA	NA	NA	NA	NA
		Medium**	Red	Cooling Alternate Heating	CFM	888	818	750	679	606	511	425	320	238	x
					BHP	0.18	0.18	0.19	0.19	0.20	0.20	0.21	0.21	0.22	x
					Gas Heat Rise (°F)	50	55	NA	NA	NA	NA	NA	NA	NA	NA
					Gas Heat Rise (°C)	28	30	NA	NA	NA	NA	NA	NA	NA	NA
		Med-High‡	Orange	Heating Alternate Cooling	CFM	1133	1069	995	930	854	784	701	628	549	464
					BHP	0.26	0.27	0.28	0.29	0.30	0.30	0.31	0.31	0.32	0.33
					Gas Heat Rise (°F)	40	42	45	48	53	NA	NA	NA	NA	NA
					Gas Heat Rise (°C)	22	23	25	27	29	NA	NA	NA	NA	NA
		High	Black	High Static Cooling Only	CFM	1291	1241	1190	1131	1081	1028	949	854	742	616
					BHP	0.41	0.42	0.43	0.43	0.44	0.45	0.44	0.42	0.40	0.38
30040	25 - 55 (14 - 31)	Low†	Blue	Alternate Heating	CFM	654	552	454	338	x	x	x	x	x	x
					BHP	0.09	0.10	0.10	0.11	x	x	x	x	x	x
					Gas Heat Rise (°F)	45	54	NA	NA	NA	NA	NA	NA	NA	NA
					Gas Heat Rise (°C)	25	30	NA	NA	NA	NA	NA	NA	NA	NA
		Med-Low‡	Pink	Heating Alternate Cooling	CFM	840	759	677	600	505	411	293	x	x	x
					BHP	0.14	0.15	0.16	0.16	0.17	0.17	0.18	x	x	x
					Gas Heat Rise (°F)	35	39	44	50	NA	NA	NA	NA	NA	NA
					Gas Heat Rise (°C)	20	22	24	28	NA	NA	NA	NA	NA	NA
		Medium**	Red	Cooling Alternate Heating	CFM	1104	1038	979	915	844	782	712	639	532	452
					BHP	0.26	0.27	0.28	0.28	0.29	0.30	0.30	0.31	0.31	0.32
					Gas Heat Rise (°F)	27	29	30	33	35	38	42	47	NA	NA
					Gas Heat Rise (°C)	15	16	17	18	20	21	23	26	NA	NA
		Med-High	Orange	Alternate Cooling Alternate Heating	CFM	1133	1069	995	930	854	784	701	628	549	464
					BHP	0.26	0.27	0.28	0.29	0.30	0.30	0.31	0.31	0.32	0.33
					Gas Heat Rise (°F)	26	28	30	32	35	38	42	47	54	NA
					Gas Heat Rise (°C)	15	15	17	18	19	21	24	26	30	NA
		High	Black	High Static Cooling Only	CFM	1291	1241	1190	1131	1081	1028	949	854	742	616
					BHP	0.41	0.42	0.43	0.43	0.44	0.45	0.44	0.42	0.40	0.38

Manufacturer reserves the right to change, at any time, specifications and designs without notice and without obligations.

Dry Coil Air Delivery* - Horizontal and Downflow Discharge Sizes 24-60 208/230VAC - 1 Phase (Continued)

Unit Size	Heating Rise °F (°C)	Motor Speed	Tap	Allowable Functions	ESP (in. W.C.)	0.1	0.2	0.3	0.4	0.5	0.6	0.7	0.8	0.9	1
30060	25 - 55 (14 - 31)	Low†	Blue		CFM	654	552	454	338	x	x	x	x	x	x
					BHP	0.09	0.10	0.10	0.11	x	x	x	x	x	x
					Gas Heat Rise (°F)	NA	NA	NA	NA	NA	NA	NA	NA	NA	NA
					Gas Heat Rise (°C)	NA	NA	NA	NA	NA	NA	NA	NA	NA	NA
		Med-Low	Pink	Alternate Cooling Alternate Heating	CFM	840	759	677	600	505	411	293	x	x	x
					BHP	0.14	0.15	0.16	0.16	0.17	0.17	0.18	x	x	x
					Gas Heat Rise (°F)	53	NA	NA	NA	NA	NA	NA	NA	NA	NA
					Gas Heat Rise (°C)	30	NA	NA	NA	NA	NA	NA	NA	NA	NA
		Medium**	Red	Cooling Alternate Heating	CFM	1104	1038	979	915	844	782	712	639	532	452
					BHP	0.26	0.27	0.28	0.28	0.29	0.30	0.30	0.31	0.31	0.32
					Gas Heat Rise (°F)	41	43	46	49	53	NA	NA	NA	NA	NA
					Gas Heat Rise (°C)	23	24	25	27	30	NA	NA	NA	NA	NA
		Med-High‡	Orange	Heating Alternate Cooling	CFM	1133	1069	995	930	854	784	701	628	549	464
					BHP	0.26	0.27	0.28	0.29	0.30	0.30	0.31	0.31	0.32	0.33
					Gas Heat Rise (°F)	40	42	45	48	53	NA	NA	NA	NA	NA
					Gas Heat Rise (°C)	22	23	25	27	29	NA	NA	NA	NA	NA
		High	Black	High Static Cooling Only	CFM	1291	1241	1190	1131	1081	1028	949	854	742	616
					BHP	0.41	0.42	0.43	0.43	0.44	0.45	0.44	0.42	0.40	0.38
36060	25 - 55 (14 - 31)	Low†	Blue		CFM	650	587	517	442	381	320	259	x	x	x
					BHP	0.08	0.08	0.09	0.09	0.10	0.10	0.11	x	x	x
					Gas Heat Rise (°F)	NA	NA	NA	NA	NA	NA	NA	NA	NA	NA
					Gas Heat Rise (°C)	NA	NA	NA	NA	NA	NA	NA	NA	NA	NA
		Med-Low‡	Pink	Heating Alternate Cooling	CFM	1144	1105	1066	1026	984	941	895	850	806	763
					BHP	0.28	0.28	0.29	0.30	0.31	0.31	0.32	0.33	0.34	0.34
					Gas Heat Rise (°F)	39	41	42	44	46	48	50	53	NA	NA
					Gas Heat Rise (°C)	22	23	23	24	25	26	28	29	NA	NA
		Medium**	Red	Cooling Alternate Heating	CFM	1223	1186	1151	1115	1075	1039	1001	957	914	870
					BHP	0.34	0.34	0.35	0.36	0.37	0.37	0.38	0.39	0.40	0.41
					Gas Heat Rise (°F)	37	38	39	40	42	43	45	47	49	52
					Gas Heat Rise (°C)	20	21	22	22	23	24	25	26	27	29
		Med-High	Orange	Alternate Cooling	CFM	1356	1321	1288	1251	1216	1181	1149	1109	1071	1034
					BHP	0.43	0.44	0.45	0.46	0.46	0.47	0.48	0.49	0.50	0.51
					Gas Heat Rise (°F)	NA	NA	NA	NA	NA	NA	NA	NA	NA	NA
					Gas Heat Rise (°C)	NA	NA	NA	NA	NA	NA	NA	NA	NA	NA
		High	Black	High Static Cooling Only	CFM	1520	1487	1459	1429	1394	1364	1331	1295	1261	1225
					BHP	0.60	0.60	0.61	0.62	0.63	0.64	0.65	0.66	0.66	0.67
36090	35 - 65 (19 - 36)	Low†	Blue		CFM	650	587	517	442	381	320	259	x	x	x
					BHP	0.08	0.08	0.09	0.09	0.10	0.10	0.11	x	x	x
					Gas Heat Rise (°F)	NA	NA	NA	NA	NA	NA	NA	NA	NA	NA
					Gas Heat Rise (°C)	NA	NA	NA	NA	NA	NA	NA	NA	NA	NA
		Med-Low	Pink	Alternate Cooling Alternate Heating	CFM	1144	1105	1066	1026	984	941	895	850	806	763
					BHP	0.28	0.28	0.29	0.30	0.31	0.31	0.32	0.33	0.34	0.34
					Gas Heat Rise (°F)	58	61	63	65	NA	NA	NA	NA	NA	NA
					Gas Heat Rise (°C)	32	34	35	36	NA	NA	NA	NA	NA	NA
		Medium**	Red	Cooling Alternate Heating	CFM	1223	1186	1151	1115	1075	1039	1001	957	914	870
					BHP	0.34	0.34	0.35	0.36	0.37	0.37	0.38	0.39	0.40	0.41
					Gas Heat Rise (°F)	55	56	58	60	62	64	NA	NA	NA	NA
					Gas Heat Rise (°C)	30	31	32	33	35	36	NA	NA	NA	NA
		Med-High‡	Orange	Heating Alternate Cooling	CFM	1356	1321	1288	1251	1216	1181	1149	1109	1071	1034
					BHP	0.43	0.44	0.45	0.46	0.46	0.47	0.48	0.49	0.50	0.51
					Gas Heat Rise (°F)	49	51	52	53	55	57	58	60	62	65
					Gas Heat Rise (°C)	27	28	29	30	31	31	32	33	35	36
		High	Black	High Static Cooling Only	CFM	1520	1487	1459	1429	1394	1364	1331	1295	1261	1225
					BHP	0.60	0.60	0.61	0.62	0.63	0.64	0.65	0.66	0.66	0.67

Dry Coil Air Delivery* - Horizontal and Downflow Discharge Sizes 24-60 208/230VAC - 1 Phase (Continued)

Unit Size	Heating Rise °F (°C)	Motor Speed	Tap	Allowable Functions	ESP (in. W.C.)	0.1	0.2	0.3	0.4	0.5	0.6	0.7	0.8	0.9	1
42060	25 - 55 (14 - 31)	Low†	Blue	Alternate Heating	CFM	1001	902	833	777	717	650	575	527	466	419
					BHP	0.13	0.13	0.14	0.14	0.15	0.16	0.17	0.18	0.19	0.20
					Gas Heat Rise (°F)	45	50	54	NA	NA	NA	NA	NA	NA	NA
					Gas Heat Rise (°C)	25	28	30	NA	NA	NA	NA	NA	NA	NA
		Med-Low‡	Pink	Heating	CFM	1016	950	902	842	783	721	655	590	541	480
					BHP	0.13	0.14	0.15	0.16	0.17	0.18	0.19	0.20	0.21	0.22
					Gas Heat Rise (°F)	44	47	50	53	NA	NA	NA	NA	NA	NA
					Gas Heat Rise (°C)	25	26	28	30	NA	NA	NA	NA	NA	NA
		Medium**	Red	Cooling Alternate Heating	CFM	1403	1358	1316	1265	1217	1167	1116	1067	1012	956
					BHP	0.29	0.30	0.31	0.33	0.34	0.35	0.36	0.37	0.38	0.39
					Gas Heat Rise (°F)	32	33	34	35	37	38	40	42	44	47
					Gas Heat Rise (°C)	18	18	19	20	20	21	22	23	25	26
		Med-High	Orange	Alternate Cooling Alternate Heating	CFM	1461	1411	1367	1327	1275	1220	1174	1127	1074	1022
					BHP	0.32	0.33	0.35	0.36	0.37	0.38	0.39	0.40	0.41	0.42
					Gas Heat Rise (°F)	31	32	33	34	35	37	38	40	42	44
					Gas Heat Rise (°C)	17	18	18	19	20	20	21	22	23	24
		High	Black	High Static Cooling Only	CFM	1575	1528	1488	1447	1406	1360	1314	1264	1213	1159
					BHP	0.40	0.42	0.43	0.44	0.45	0.46	0.47	0.48	0.49	0.50
42090	35 - 65 (19 - 36)	Low†	Blue		CFM	1001	902	833	777	717	650	575	527	466	419
					BHP	0.13	0.13	0.14	0.14	0.15	0.16	0.17	0.18	0.19	0.20
					Gas Heat Rise (°F)	NA	NA	NA	NA	NA	NA	NA	NA	NA	NA
					Gas Heat Rise (°C)	NA	NA	NA	NA	NA	NA	NA	NA	NA	NA
		Med-Low	Pink		CFM	1016	950	902	842	783	721	655	590	541	480
					BHP	0.13	0.14	0.15	0.16	0.17	0.18	0.19	0.20	0.21	0.22
					Gas Heat Rise (°F)	NA	NA	NA	NA	NA	NA	NA	NA	NA	NA
					Gas Heat Rise (°C)	NA	NA	NA	NA	NA	NA	NA	NA	NA	NA
		Medium**	Red	Cooling Alternate Heating	CFM	1403	1358	1316	1265	1217	1167	1116	1067	1012	956
					BHP	0.29	0.30	0.31	0.33	0.34	0.35	0.36	0.37	0.38	0.39
					Gas Heat Rise (°F)	48	50	51	53	56	58	61	63	NA	NA
					Gas Heat Rise (°C)	27	28	29	30	31	32	34	35	NA	NA
		Med-High‡	Orange	Heating Alternate Cooling	CFM	1461	1411	1367	1327	1275	1220	1174	1127	1074	1022
					BHP	0.32	0.33	0.35	0.36	0.37	0.38	0.39	0.40	0.41	0.42
					Gas Heat Rise (°F)	46	48	49	51	53	55	58	60	63	NA
					Gas Heat Rise (°C)	26	27	27	28	29	31	32	33	35	NA
		High	Black	High Static Cooling Only	CFM	1575	1528	1488	1447	1406	1360	1314	1264	1213	1159
					BHP	0.40	0.42	0.43	0.44	0.45	0.46	0.47	0.48	0.49	0.50
48090	35 - 65 (19 - 36)	Low†	Blue		CFM	644	552	461	376	301	235	x	x	x	x
					BHP	0.06	0.07	0.07	0.08	0.08	0.09	x	x	x	x
					Gas Heat Rise (°F)	NA	NA	NA	NA	NA	NA	NA	NA	NA	NA
					Gas Heat Rise (°C)	NA	NA	NA	NA	NA	NA	NA	NA	NA	NA
		Med-Low‡	Pink	Heating Alternate Cooling	CFM	1430	1386	1347	1302	1258	1208	1160	1114	1065	1014
					BHP	0.26	0.27	0.28	0.29	0.30	0.30	0.32	0.33	0.34	0.35
					Gas Heat Rise (°F)	47	49	50	52	54	56	58	61	64	NA
					Gas Heat Rise (°C)	26	27	28	29	30	31	32	34	35	NA
		Medium**	Red	Cooling Alternate Heating	CFM	1658	1622	1585	1549	1512	1476	1442	1402	1360	1322
					BHP	0.39	0.40	0.41	0.42	0.44	0.45	0.46	0.47	0.48	0.49
					Gas Heat Rise (°F)	41	42	43	44	45	46	47	48	50	51
					Gas Heat Rise (°C)	23	23	24	24	25	25	26	27	28	28
		Med-High	Orange	Alternate Cooling	CFM	1945	1913	1867	1829	1792	1758	1717	1688	1645	1603
					BHP	0.58	0.59	0.61	0.63	0.64	0.65	0.67	0.68	0.69	0.71
					Gas Heat Rise (°F)	NA	NA	NA	NA	NA	NA	NA	NA	NA	NA
					Gas Heat Rise (°C)	NA	NA	NA	NA	NA	NA	NA	NA	NA	NA
		High	Black	High Static Cooling Only	CFM	2201	2172	2138	2108	2074	2041	1970	1867	1764	1634
					BHP	0.83	0.84	0.87	0.88	0.89	0.91	0.89	0.83	0.79	0.74

Dry Coil Air Delivery* - Horizontal and Downflow Discharge Sizes 24-60 208/230VAC - 1 Phase (Continued)

Unit Size	Heating Rise °F (°C)	Motor Speed	Tap	Allowable Functions	ESP (in. W.C.)	0.1	0.2	0.3	0.4	0.5	0.6	0.7	0.8	0.9	1
48115	30- 60 (17 - 33)	Low†	Blue		CFM	644	552	461	376	301	235	x	x	x	x
					BHP	0.06	0.07	0.07	0.08	0.08	0.09	x	x	x	x
					Gas Heat Rise (°F)	NA	NA	NA	NA	NA	NA	NA	NA	NA	NA
					Gas Heat Rise (°C)	NA	NA	NA	NA	NA	NA	NA	NA	NA	NA
		Med-Low	Pink	Alternate Cooling Alternate Heating	CFM	1430	1386	1347	1302	1258	1208	1160	1114	1065	1014
					BHP	0.26	0.27	0.28	0.29	0.30	0.30	0.32	0.33	0.34	0.35
					Gas Heat Rise (°F)	60	NA	NA	NA	NA	NA	NA	NA	NA	NA
					Gas Heat Rise (°C)	34	NA	NA	NA	NA	NA	NA	NA	NA	NA
		Medium**	Red	Cooling Alternate Heating	CFM	1658	1622	1585	1549	1512	1476	1442	1402	1360	1322
					BHP	0.39	0.40	0.41	0.42	0.44	0.45	0.46	0.47	0.48	0.49
					Gas Heat Rise (°F)	52	53	55	56	57	59	60	NA	NA	NA
					Gas Heat Rise (°C)	29	30	30	31	32	33	33	NA	NA	NA
		Med-High‡	Orange	Heating Alternate Cooling	CFM	1945	1913	1867	1829	1792	1758	1717	1688	1645	1603
					BHP	0.58	0.59	0.61	0.63	0.64	0.65	0.67	0.68	0.69	0.71
					Gas Heat Rise (°F)	44	45	46	47	48	49	50	51	53	54
					Gas Heat Rise (°C)	25	25	26	26	27	27	28	28	29	30
		High	Black	High Static Cooling Only	CFM	2201	2172	2138	2108	2074	2041	1970	1867	1764	1634
					BHP	0.83	0.84	0.87	0.88	0.89	0.91	0.89	0.83	0.79	0.74
48130	35 - 65 (19 - 36)	Low†	Blue		CFM	644	552	461	376	301	235	x	x	x	x
					BHP	0.06	0.07	0.07	0.08	0.08	0.09	x	x	x	x
					Gas Heat Rise (°F)	NA	NA	NA	NA	NA	NA	NA	NA	NA	NA
					Gas Heat Rise (°C)	NA	NA	NA	NA	NA	NA	NA	NA	NA	NA
		Med-Low	Pink	Alternate Cooling	CFM	1430	1386	1347	1302	1258	1208	1160	1114	1065	1014
					BHP	0.26	0.27	0.28	0.29	0.30	0.30	0.32	0.33	0.34	0.35
					Gas Heat Rise (°F)	NA	NA	NA	NA	NA	NA	NA	NA	NA	NA
					Gas Heat Rise (°C)	NA	NA	NA	NA	NA	NA	NA	NA	NA	NA
		Medium**	Red	Cooling Alternate Heating	CFM	1658	1622	1585	1549	1512	1476	1442	1402	1360	1322
					BHP	0.39	0.40	0.41	0.42	0.44	0.45	0.46	0.47	0.48	0.49
					Gas Heat Rise (°F)	58	59	61	62	63	65	NA	NA	NA	NA
					Gas Heat Rise (°C)	32	33	34	34	35	36	NA	NA	NA	NA
		Med-High‡	Orange	Heating Alternate Cooling	CFM	1945	1913	1867	1829	1792	1758	1717	1688	1645	1603
					BHP	0.58	0.59	0.61	0.63	0.64	0.65	0.67	0.68	0.69	0.71
					Gas Heat Rise (°F)	49	50	51	52	54	55	56	57	58	60
					Gas Heat Rise (°C)	27	28	29	29	30	30	31	32	32	33
		High	Black	High Static Cooling Only	CFM	2201	2172	2138	2108	2074	2041	1970	1867	1764	1634
					BHP	0.83	0.84	0.87	0.88	0.89	0.91	0.89	0.83	0.79	0.74
60090	35 - 65 (19 - 36)	Low†	Blue		CFM	839	768	697	625	551	486	422	360	306	x
					BHP	0.09	0.10	0.10	0.11	0.12	0.12	0.13	0.14	0.14	x
					Gas Heat Rise (°F)	NA	NA	NA	NA	NA	NA	NA	NA	NA	NA
					Gas Heat Rise (°C)	NA	NA	NA	NA	NA	NA	NA	NA	NA	NA
		Med-Low‡	Pink	Heating	CFM	1403	1361	1320	1276	1236	1192	1145	1099	1054	1012
					BHP	0.28	0.29	0.30	0.31	0.31	0.33	0.34	0.35	0.36	0.37
					Gas Heat Rise (°F)	48	50	51	53	55	57	59	62	64	NA
					Gas Heat Rise (°C)	27	28	28	29	30	32	33	34	36	NA
		Medium**	Red	Cooling Alternate Heating	CFM	1822	1788	1757	1726	1690	1657	1623	1589	1553	1518
					BHP	0.54	0.55	0.56	0.57	0.59	0.60	0.61	0.62	0.63	0.64
					Gas Heat Rise (°F)	37	38	39	39	40	41	42	43	44	45
					Gas Heat Rise (°C)	21	21	21	22	22	23	23	24	24	25
		Med-High	Orange	Alternate Cooling	CFM	1982	1940	1900	1859	1816	1775	1739	1701	1655	1596
					BHP	0.61	0.62	0.63	0.65	0.66	0.67	0.69	0.70	0.71	0.73
					Gas Heat Rise (°F)	NA	NA	NA	NA	NA	NA	NA	NA	NA	NA
					Gas Heat Rise (°C)	NA	NA	NA	NA	NA	NA	NA	NA	NA	NA
		High	Black	High Static Cooling Only	CFM	2271	2241	2206	2171	2134	2080	1973	1857	1746	1596
					BHP	0.90	0.91	0.93	0.95	0.96	0.95	0.90	0.84	0.78	0.73

Dry Coil Air Delivery* - Horizontal and Downflow Discharge Sizes 24-60 208/230VAC - 1 Phase (Continued)

Unit Size	Heating Rise °F (°C)	Motor Speed	Tap	Allowable Functions	ESP (in. W.C.)	0.1	0.2	0.3	0.4	0.5	0.6	0.7	0.8	0.9	1
60115	30- 60 17 - 33)	Low†	Blue		CFM	839	768	697	625	551	486	422	360	306	x
					BHP	0.09	0.10	0.10	0.11	0.12	0.12	0.13	0.14	0.14	x
					Gas Heat Rise (°F)	NA	NA	NA	NA	NA	NA	NA	NA	NA	NA
					Gas Heat Rise (°C)	NA	NA	NA	NA	NA	NA	NA	NA	NA	NA
		Med-Low	Pink		CFM	1403	1361	1320	1276	1236	1192	1145	1099	1054	1012
					BHP	0.28	0.29	0.30	0.31	0.31	0.33	0.34	0.35	0.36	0.37
					Rise (°F)	NA	NA	NA	NA	NA	NA	NA	NA	NA	NA
					Rise (°C)	NA	NA	NA	NA	NA	NA	NA	NA	NA	NA
		Medium**	Red	Cooling Alternate Heating	CFM	1822	1788	1757	1726	1690	1657	1623	1589	1553	1518
					BHP	0.54	0.55	0.56	0.57	0.59	0.60	0.61	0.62	0.63	0.64
					Gas Heat Rise (°F)	47	48	49	50	51	52	53	54	56	57
					Gas Heat Rise (°C)	26	27	27	28	28	29	30	30	31	32
		Med-High‡	Orange	Heating Alternate Cooling	CFM	1982	1940	1900	1859	1816	1775	1739	1701	1655	1596
					BHP	0.61	0.62	0.63	0.65	0.66	0.67	0.69	0.70	0.71	0.73
					Gas Heat Rise (°F)	44	45	45	46	48	49	50	51	52	54
					Gas Heat Rise (°C)	24	25	25	26	26	27	28	28	29	30
		High	Black	High Static Cooling Only	CFM	2271	2241	2206	2171	2134	2080	1973	1857	1746	1596
					BHP	0.90	0.91	0.93	0.95	0.96	0.95	0.90	0.84	0.78	0.73
60130	35 - 65 (19 - 36)	Low†	Blue		CFM	839.2	768.3	696.8	625.4	551.4	485.6	421.7	360.2	305.8	x
					BHP	0.09	0.10	0.10	0.11	0.12	0.12	0.13	0.14	0.14	x
					Gas Heat Rise (°F)	NA	NA	NA	NA	NA	NA	NA	NA	NA	NA
					Gas Heat Rise (°C)	NA	NA	NA	NA	NA	NA	NA	NA	NA	NA
		Med-Low	Pink		CFM	1403	1361	1320	1276	1236	1192	1145	1099	1054	1012
					BHP	0.28	0.29	0.30	0.31	0.31	0.33	0.34	0.35	0.36	0.37
					Rise (°F)	NA	NA	NA	NA	NA	NA	NA	NA	NA	NA
					Rise (°C)	NA	NA	NA	NA	NA	NA	NA	NA	NA	NA
		Medium**	Red	Cooling Alternate Heating	CFM	1822	1788	1757	1726	1690	1657	1623	1589	1553	1518
					BHP	0.54	0.55	0.56	0.57	0.59	0.60	0.61	0.62	0.63	0.64
					Gas Heat Rise (°F)	53	54	55	56	57	58	59	60	62	63
					Gas Heat Rise (°C)	29	30	30	31	32	32	33	34	34	35
		Med-High‡	Orange	Heating Alternate Cooling	CFM	1982	1940	1900	1859	1816	1775	1739	1701	1655	1596
					BHP	0.61	0.62	0.63	0.65	0.66	0.67	0.69	0.70	0.71	0.73
					Gas Heat Rise (°F)	48	49	50	52	53	54	55	56	58	60
					Gas Heat Rise (°C)	27	27	28	29	29	30	31	31	32	33
		High	Black	High Static Cooling Only	CFM	2271	2241	2206	2171	2134	2080	1973	1857	1746	1596
					BHP	0.90	0.91	0.93	0.95	0.96	0.95	0.90	0.84	0.78	0.73

Shaded areas indicate speed/static combinations that are not permitted for dehumidification speed.

*. Air delivery values are without air filter and are for dry coil (See Wet Coil Pressure Drop table).
†. Factory-shipped continuous fan speed
‡. Factory-shipped heating speed
**. Factory-shipped cooling speed
"High Static Cooling" = Only to be used for cooling function (not allowed for heating function)
"NA" = Not allowed for heating speed
NOTE: Deduct field-supplied air filter pressure drop and wet coil pressure drop to obtain static pressure available for ducting.

Manufacturer reserves the right to change, at any time, specifications and designs without notice and without obligations.

Dry Coil Air Delivery* - Horizontal Discharge Sizes 36-60 3 Phase Models Only

Unit	Heating Rise Range	Motor Speed	Wire Color		External Static Pressure (IN. W.C.)								
					0.1	0.2	0.3	0.4	0.5	0.6	0.7	0.8	0.9
36060	25 - 55°F (14 - 31°C)	Low	Blue	CFM	979	912	859	789	731	654	556	454	374
				Heating Rise (°F)	45	48	51	NA	NA	NA	NA	NA	NA
				Heating Rise (°C)	25	27	28	NA	NA	NA	NA	NA	NA
		Med-Low†	Pink	CFM	1136	1080	1015	957	912	861	808	723	633
				Heating Rise (°F)	39	41	43	46	48	51	54	NA	NA
				Heating Rise (°C)	22	23	24	26	27	28	30	NA	NA
		Medium‡	Red	CFM	1208	1144	1091	1025	964	902	886	830	746
				Heating Rise (°F)	36	38	40	43	46	49	50	53	NA
				Heating Rise (°C)	20	21	22	24	25	27	28	29	NA
		Med-High	Orange	CFM	1495	1439	1376	1303	1221	1207	1137	1052	981
				Heating Rise (°F)	29	31	32	34	36	36	39	42	45
				Heating Rise (°C)	16	17	18	19	20	20	22	23	25
		High	Black	CFM	1560	1491	1416	1337	1255	1233	1160	1082	998
				Heating Rise (°F)	28	30	31	33	35	36	38	41	44
				Heating Rise (°C)	16	16	17	18	19	20	21	23	24
36090	35 - 65°F (19 - 36°C)	Low	Blue	CFM	979	912	859	789	731	654	556	454	374
				Heating Rise (°F)	NA	NA	NA	NA	NA	NA	NA	NA	NA
				Heating Rise (°C)	NA	NA	NA	NA	NA	NA	NA	NA	NA
		Med-Low	Pink	CFM	1136	1080	1015	957	912	861	808	723	633
				Heating Rise (°F)	58	61	65	NA	NA	NA	NA	NA	NA
				Heating Rise (°C)	32	34	36	NA	NA	NA	NA	NA	NA
		Medium‡	Red	CFM	1208	1144	1091	1025	964	902	886	830	746
				Heating Rise (°F)	54	58	60	64	NA	NA	NA	NA	NA
				Heating Rise (°C)	30	32	34	36	NA	NA	NA	NA	NA
		Med-High†	Orange	CFM	1495	1439	1376	1303	1221	1207	1137	1052	981
				Heating Rise (°F)	44	46	48	51	54	55	58	63	NA
				Heating Rise (°C)	24	25	27	28	30	30	32	35	NA
		High	Black	CFM	1560	1491	1416	1337	1255	1233	1160	1082	998
				Heating Rise (°F)	42	44	46	49	52	53	57	61	NA
				Heating Rise (°C)	23	25	26	27	29	30	32	34	NA
42060	25 - 55°F (14 - 31°C)	Low	Blue	CFM	952	882	806	746	671	605	530	551	486
				Heating Rise (°F)	46	49	54	NA	NA	NA	NA	NA	NA
				Heating Rise (°C)	25	27	30	NA	NA	NA	NA	NA	NA
		Med-Low†	Pink	CFM	1002	936	875	821	748	687	613	554	565
				Heating Rise (°F)	43	46	50	53	NA	NA	NA	NA	NA
				Heating Rise (°C)	24	26	28	29	NA	NA	NA	NA	NA
		Medium	Red	CFM	1255	1210	1145	1074	1008	940	878	895	838
				Heating Rise (°F)	35	36	38	40	43	46	49	48	52
				Heating Rise (°C)	19	20	21	22	24	26	27	27	29
		Med-High‡	Orange	CFM	1335	1267	1246	1176	1109	1049	988	926	872
				Heating Rise (°F)	32	34	35	37	39	41	44	47	50
				Heating Rise (°C)	18	19	19	20	22	23	24	26	28
		High	Black	CFM	1472	1401	1326	1251	1275	1198	1139	1085	1023
				Heating Rise (°F)	29	31	33	35	34	36	38	40	42
				Heating Rise (°C)	16	17	18	19	19	20	21	22	24

Manufacturer reserves the right to change, at any time, specifications and designs without notice and without obligations.

Dry Coil Air Delivery* - Horizontal Discharge Sizes 36-60 3 Phase Models Only (Continued)

Unit	Heating Rise Range	Motor Speed	Wire Color		External Static Pressure (IN. W.C.)								
					0.1	0.2	0.3	0.4	0.5	0.6	0.7	0.8	0.9
42090	35 - 65°F (19 - 36°C)	Low	Blue	CFM	952	882	806	746	671	605	530	551	486
				Heating Rise (°F)	NA	NA	NA	NA	NA	NA	NA	NA	NA
				Heating Rise (°C)	NA	NA	NA	NA	NA	NA	NA	NA	NA
		Med-Low	Pink	CFM	1002	936	875	821	748	687	613	554	565
				Heating Rise (°F)	NA	NA	NA	NA	NA	NA	NA	NA	NA
				Heating Rise (°C)	NA	NA	NA	NA	NA	NA	NA	NA	NA
		Medium†	Red	CFM	1255	1210	1145	1074	1008	940	878	895	838
				Heating Rise (°F)	53	55	58	62	NA	NA	NA	NA	NA
				Heating Rise (°C)	30	31	32	35	NA	NA	NA	NA	NA
		Med-High‡	Orange	CFM	1335	1267	1246	1176	1109	1049	988	926	872
				Heating Rise (°F)	50	53	54	57	60	64	NA	NA	NA
				Heating Rise (°C)	28	29	30	32	34	35	NA	NA	NA
		High	Black	CFM	1472	1401	1326	1251	1275	1198	1139	1085	1023
				Heating Rise (°F)	45	48	50	53	52	56	59	62	65
				Heating Rise (°C)	25	27	28	30	29	31	33	34	36
48090	35 - 65°F (19 - 36°C)	Low†	Blue	CFM	1402	1351	1311	1263	1224	1172	1136	1080	1041
				Heating Rise (°F)	48	50	51	53	55	57	59	62	64
				Heating Rise (°C)	27	28	28	29	30	32	33	34	36
		Med-Low	Pink	CFM	1457	1404	1367	1318	1284	1233	1197	1144	1104
				Heating Rise (°F)	46	48	49	51	52	54	56	58	61
				Heating Rise (°C)	26	26	27	28	29	30	31	32	34
		Medium‡	Red	CFM	1736	1695	1642	1601	1553	1512	1465	1427	1381
				Heating Rise (°F)	39	39	41	42	43	44	46	47	48
				Heating Rise (°C)	21	22	23	23	24	25	25	26	27
		Med-High	Orange	CFM	2149	2111	2062	2026	1980	1945	1905	1864	1793
				Heating Rise (°F)	NA	NA	NA	NA	NA	NA	35	36	37
				Heating Rise (°C)	NA	NA	NA	NA	NA	NA	20	20	21
		High	Black	CFM	2344	2306	2259	2203	2141	2070	1991	1902	1803
				Heating Rise (°F)	NA	NA	NA	NA	NA	NA	NA	35	37
				Heating Rise (°C)	NA	NA	NA	NA	NA	NA	NA	20	21
48115	30 - 60°F (17 - 33°C)	Low	Blue	CFM	1402	1351	1311	1263	1224	1172	1136	1080	1041
				Heating Rise (°F)	NA	NA	NA	NA	NA	NA	NA	NA	NA
				Heating Rise (°C)	NA	NA	NA	NA	NA	NA	NA	NA	NA
		Med-Low	Pink	CFM	1457	1404	1367	1318	1284	1233	1197	1144	1104
				Heating Rise (°F)	58	NA	NA	NA	NA	NA	NA	NA	NA
				Heating Rise (°C)	32	NA	NA	NA	NA	NA	NA	NA	NA
		Medium‡	Red	CFM	1736	1695	1642	1601	1553	1512	1465	1427	1381
				Heating Rise (°F)	49	50	52	53	55	56	58	60	NA
				Heating Rise (°C)	27	28	29	30	30	31	32	33	NA
		Med-High†	Orange	CFM	2149	2111	2062	2026	1980	1945	1905	1864	1793
				Heating Rise (°F)	40	40	41	42	43	44	45	46	48
				Heating Rise (°C)	22	22	23	23	24	24	25	25	26
		High	Black	CFM	2344	2306	2259	2203	2141	2070	1991	1902	1803
				Heating Rise (°F)	36	37	38	39	40	41	43	45	47
				Heating Rise (°C)	20	21	21	21	22	23	24	25	26

Dry Coil Air Delivery* - Horizontal Discharge Sizes 36-60 3 Phase Models Only (Continued)

Unit	Heating Rise Range	Motor Speed	Wire Color		External Static Pressure (IN. W.C.)								
					0.1	0.2	0.3	0.4	0.5	0.6	0.7	0.8	0.9
48130	35 - 65°F (19 - 36°C)	Low	Blue	CFM	1402	1351	1311	1263	1224	1172	1136	1080	1041
				Heating Rise (°F)	NA	NA	NA	NA	NA	NA	NA	NA	NA
				Heating Rise (°C)	NA	NA	NA	NA	NA	NA	NA	NA	NA
		Med-Low	Pink	CFM	1457	1404	1367	1318	1284	1233	1197	1144	1104
				Heating Rise (°F)	65	NA	NA	NA	NA	NA	NA	NA	NA
				Heating Rise (°C)	36	NA	NA	NA	NA	NA	NA	NA	NA
		Medium‡	Red	CFM	1736	1695	1642	1601	1553	1512	1465	1427	1381
				Heating Rise (°F)	55	56	58	59	61	63	65	NA	NA
				Heating Rise (°C)	30	31	32	33	34	35	36	NA	NA
		Med-High†	Orange	CFM	2149	2111	2062	2026	1980	1945	1905	1864	1793
				Heating Rise (°F)	44	45	46	47	48	49	50	51	53
				Heating Rise (°C)	25	25	26	26	27	27	28	28	29
		High	Black	CFM	2344	2306	2259	2203	2141	2070	1991	1902	1803
				Heating Rise (°F)	41	41	42	43	44	46	48	50	53
				Heating Rise (°C)	23	23	23	24	25	26	27	28	29
60090	35 - 65°F (19 - 36°C)	Low†	Blue	CFM	1445	1389	1341	1281	1236	1189	1139	1072	1027
				Heating Rise (°F)	46	48	50	52	54	56	59	62	65
				Heating Rise (°C)	26	27	28	29	30	31	33	35	36
		Med-Low	Pink	CFM	1678	1635	1602	1558	1513	1474	1438	1404	1349
				Heating Rise (°F)	40	41	42	43	44	45	47	48	50
				Heating Rise (°C)	22	23	23	24	25	25	26	26	28
		Medium‡	Red	CFM	1962	1915	1880	1843	1794	1753	1711	1675	1628
				Heating Rise (°F)	NA	35	36	36	37	38	39	40	41
				Heating Rise (°C)	NA	19	20	20	21	21	22	22	23
		Med-High	Orange	CFM	2131	2088	2065	2013	1982	1941	1888	1860	1785
				Heating Rise (°F)	NA	NA	NA	NA	NA	NA	35	36	37
				Heating Rise (°C)	NA	NA	NA	NA	NA	NA	20	20	21
		High	Black	CFM	2461	2409	2339	2286	2192	2140	2062	1968	1874
				Heating Rise (°F)	NA	NA	NA	NA	NA	NA	NA	NA	36
				Heating Rise (°C)	NA	NA	NA	NA	NA	NA	NA	NA	20
60115	30 - 60°F (17 - 33°C)	Low	Blue	CFM	1445	1389	1341	1281	1236	1189	1139	1072	1027
				Heating Rise (°F)	59	NA	NA	NA	NA	NA	NA	NA	NA
				Heating Rise (°C)	33	NA	NA	NA	NA	NA	NA	NA	NA
		Med-Low	Pink	CFM	1678	1635	1602	1558	1513	1474	1438	1404	1349
				Heating Rise (°F)	51	52	53	55	56	58	59	NA	NA
				Heating Rise (°C)	28	29	30	30	31	32	33	NA	NA
		Medium‡	Red	CFM	1962	1915	1880	1843	1794	1753	1711	1675	1628
				Heating Rise (°F)	43	44	45	46	47	49	50	51	52
				Heating Rise (°C)	24	25	25	26	26	27	28	28	29
		Med-High†	Orange	CFM	2131	2088	2065	2013	1982	1941	1888	1860	1785
				Heating Rise (°F)	40	41	41	42	43	44	45	46	48
				Heating Rise (°C)	22	23	23	24	24	24	25	25	27
		High	Black	CFM	2461	2409	2339	2286	2192	2140	2062	1968	1874
				Heating Rise (°F)	35	35	36	37	39	40	41	43	45
				Heating Rise (°C)	19	20	20	21	22	22	23	24	25

Manufacturer reserves the right to change, at any time, specifications and designs without notice and without obligations.

Dry Coil Air Delivery* - Horizontal Discharge Sizes 36-60 3 Phase Models Only (Continued)

Unit	Heating Rise Range	Motor Speed	Wire Color		External Static Pressure (IN. W.C.)								
					0.1	0.2	0.3	0.4	0.5	0.6	0.7	0.8	0.9
60130	35 - 65°F (19 - 36°C)	Low	Blue	CFM	1445	1389	1341	1281	1236	1189	1139	1072	1027
				Heating Rise (°F)	NA	NA	NA	NA	NA	NA	NA	NA	NA
				Heating Rise (°C)	NA	NA	NA	NA	NA	NA	NA	NA	NA
		Med-Low	Pink	CFM	1678	1635	1602	1558	1513	1474	1438	1404	1349
				Heating Rise (°F)	57	58	59	61	63	65	NA	NA	NA
				Heating Rise (°C)	32	32	33	34	35	36	NA	NA	NA
		Medium‡	Red	CFM	1962	1915	1880	1843	1794	1753	1711	1675	1628
				Heating Rise (°F)	49	50	51	52	53	54	56	57	58
				Heating Rise (°C)	27	28	28	29	29	30	31	32	32
		Med-High†	Orange	CFM	2131	2088	2065	2013	1982	1941	1888	1860	1785
				Heating Rise (°F)	45	46	46	47	48	49	50	51	53
				Heating Rise (°C)	25	25	26	26	27	27	28	28	30
		High	Black	CFM	2461	2409	2339	2286	2192	2140	2062	1968	1874
				Heating Rise (°F)	39	40	41	42	43	44	46	48	51
				Heating Rise (°C)	21	22	23	23	24	25	26	27	28

Shaded areas indicate speed/static combinations that are not permitted for dehumidification speed.

*. Air delivery values are without air filter and are for dry coil (See Wet Coil Pressure Drop table).
†. Factory-shipped heating speed
‡. Factory-shipped cooling speed
"NA" = Not allowed for heating speed
NOTE: Deduct field-supplied air filter pressure drop and wet coil pressure drop to obtain external static pressure available for ducting.

Manufacturer reserves the right to change, at any time, specifications and designs without notice and without obligations.

Dry Coil Air Delivery* - Downflow Discharge Sizes 36-60 3 Phase Models Only

Unit	Heating Rise Range	Motor Speed	Wire Color		External Static Pressure (IN. W.C.)									
					0.1	0.2	0.3	0.4	0.5	0.6	0.7	0.8	0.9	1.0
36060	25 - 55°F (14 - 31°C)	Low	Blue	CFM	979	912	859	789	731	654	556	454	374	255
				WATTS	202	212	217	221	231	236	245	251	259	253
				BHP	0.22	0.23	0.23	0.24	0.25	0.25	0.26	0.27	0.28	0.27
				Heating Rise (°F)	45	48	51	NA	NA	NA	NA	NA	NA	NA
				Heating Rise (°C)	25	27	28	NA	NA	NA	NA	NA	NA	NA
		Med-Low†	Pink	CFM	1136	1080	1015	957	912	861	808	723	633	545
				WATTS	294	309	310	322	325	333	341	349	354	367
				BHP	0.32	0.33	0.33	0.35	0.35	0.36	0.37	0.37	0.38	
				Heating Rise (°F)	39	41	43	46	48	51	54	NA	NA	NA
				Heating Rise (°C)	22	23	24	26	27	28	30	NA	NA	NA
		Medium‡	Red	CFM	1208	1144	1091	1025	964	902	886	830	746	663
				WATTS	345	350	358	366	373	377	390	396	407	410
				BHP	0.37	0.38	0.38	0.39	0.40	0.40	0.42	0.42	0.44	0.44
				Heating Rise (°F)	36	38	40	43	46	49	50	53	NA	NA
				Heating Rise (°C)	20	21	22	24	25	27	28	29	NA	NA
		Med-High	Orange	CFM	1495	1439	1376	1303	1221	1207	1137	1052	981	894
				WATTS	625	634	635	633	624	613	598	583	573	551
				BHP	0.67	0.68	0.68	0.68	0.67	0.66	0.64	0.63	0.61	0.59
				Heating Rise (°F)	29	31	32	34	36	36	39	42	45	49
				Heating Rise (°C)	16	17	18	19	20	20	22	23	25	27
		High	Black	CFM	1560	1491	1416	1337	1255	1233	1160	1082	998	911
				WATTS	708	699	683	674	660	634	624	606	581	566
				BHP	0.76	0.75	0.73	0.72	0.71	0.68	0.67	0.65	0.62	0.61
				Heating Rise (°F)	28	30	31	33	35	36	38	41	44	48
				Heating Rise (°C)	16	16	17	18	19	20	21	23	24	27
36090	35 - 65°F (19 - 36°C)	Low	Blue	CFM	979	912	859	789	731	654	556	454	374	255
				WATTS	202	212	217	221	231	236	245	251	259	253
				BHP	0.22	0.23	0.23	0.24	0.25	0.25	0.26	0.27	0.28	0.27
				Heating Rise (°F)	NA	NA	NA	NA	NA	NA	NA	NA	NA	NA
				Heating Rise (°C)	NA	NA	NA	NA	NA	NA	NA	NA	NA	NA
		Med-Low	Pink	CFM	1136	1080	1015	957	912	861	808	723	633	545
				WATTS	294	309	310	322	325	333	341	349	354	367
				BHP	0.32	0.33	0.33	0.35	0.35	0.36	0.37	0.37	0.38	
				Heating Rise (°F)	58	61	NA	NA	NA	NA	NA	NA	NA	NA
				Heating Rise (°C)	32	34	NA	NA	NA	NA	NA	NA	NA	NA
		Medium‡	Red	CFM	1208	1144	1091	1025	964	902	886	830	746	663
				WATTS	345	350	358	366	373	377	390	396	407	410
				BHP	0.37	0.38	0.38	0.39	0.40	0.40	0.42	0.42	0.44	0.44
				Heating Rise (°F)	54	58	60	64	NA	NA	NA	NA	NA	NA
				Heating Rise (°C)	30	32	34	36	NA	NA	NA	NA	NA	NA
		Med-High†	Orange	CFM	1495	1439	1376	1303	1221	1207	1137	1052	981	894
				WATTS	625	634	635	633	624	613	598	583	573	551
				BHP	0.67	0.68	0.68	0.68	0.67	0.66	0.64	0.63	0.61	0.59
				Heating Rise (°F)	44	46	48	51	54	55	58	63	NA	NA
				Heating Rise (°C)	24	25	27	28	30	30	32	35	NA	NA
		High†	Black	CFM	1560	1491	1416	1337	1255	1233	1160	1082	998	911
				WATTS	708	699	683	674	660	634	624	606	581	566
				BHP	0.76	0.75	0.73	0.72	0.71	0.68	0.67	0.65	0.62	0.61
				Heating Rise (°F)	42	44	46	49	52	53	57	61	NA	NA
				Heating Rise (°C)	23	25	26	27	29	30	32	34	NA	NA

Manufacturer reserves the right to change, at any time, specifications and designs without notice and without obligations.

Dry Coil Air Delivery* - Downflow Discharge Sizes 36-60 3 Phase Models Only (Continued)

Unit	Heating Rise Range	Motor Speed	Wire Color		External Static Pressure (IN. W.C.)									
					0.1	0.2	0.3	0.4	0.5	0.6	0.7	0.8	0.9	1.0
42060	25 - 55°F (14 - 31°C)	Low	Blue	CFM	952	882	806	746	671	605	530	551	486	435
				WATTS	124	134	140	150	156	166	171	182	188	198
				BHP	0.13	0.14	0.15	0.16	0.17	0.18	0.18	0.20	0.20	0.21
				Heating Rise (°F)	45	49	54	NA	NA	NA	NA	NA	NA	NA
				Heating Rise (°C)	25	27	30	NA	NA	NA	NA	NA	NA	NA
		Med-Low†	Pink	CFM	1002	936	875	821	748	687	613	554	565	518
				WATTS	144	155	161	171	176	187	193	203	209	220
				BHP	0.15	0.17	0.17	0.18	0.19	0.20	0.21	0.22	0.22	0.24
				Heating Rise (°F)	43	46	49	53	NA	NA	NA	NA	NA	NA
				Heating Rise (°C)	24	26	27	29	NA	NA	NA	NA	NA	NA
		Medium	Red	CFM	1255	1210	1145	1074	1008	940	878	895	838	785
				WATTS	249	272	284	292	305	319	320	329	336	347
				BHP	0.27	0.29	0.30	0.31	0.33	0.34	0.34	0.35	0.36	0.37
				Heating Rise (°F)	35	36	38	40	43	46	49	48	52	55
				Heating Rise (°C)	19	20	21	22	24	26	27	27	29	31
		Med-High‡	Orange	CFM	1335	1267	1246	1176	1109	1049	988	926	872	891
				WATTS	311	323	330	342	356	367	378	385	395	403
				BHP	0.33	0.35	0.35	0.37	0.38	0.39	0.41	0.41	0.42	0.43
				Heating Rise (°F)	32	34	35	37	39	41	44	47	50	49
				Heating Rise (°C)	18	19	19	20	22	23	24	26	28	27
		High	Black	CFM	1472	1401	1326	1251	1275	1198	1139	1085	1023	961
				WATTS	401	414	426	440	471	462	473	478	486	491
				BHP	0.43	0.44	0.46	0.47	0.51	0.50	0.51	0.51	0.52	0.53
				Heating Rise (°F)	29	31	33	35	34	36	38	40	42	45
				Heating Rise (°C)	16	17	18	19	19	20	21	22	24	25
42090	35 - 65°F (19 - 36°C)	Low	Blue	CFM	952	882	806	746	671	605	530	551	486	435
				WATTS	124	134	140	150	156	166	171	182	188	198
				BHP	0.13	0.14	0.15	0.16	0.17	0.18	0.18	0.20	0.20	0.21
				Heating Rise (°F)	NA	NA	NA	NA	NA	NA	NA	NA	NA	NA
				Heating Rise (°C)	NA	NA	NA	NA	NA	NA	NA	NA	NA	NA
		Med-Low	Pink	CFM	1002	936	875	821	748	687	613	554	565	518
				WATTS	144	155	161	171	176	187	193	203	209	220
				BHP	0.15	0.17	0.17	0.18	0.19	0.20	0.21	0.22	0.22	0.24
				Heating Rise (°F)	NA	NA	NA	NA	NA	NA	NA	NA	NA	NA
				Heating Rise (°C)	NA	NA	NA	NA	NA	NA	NA	NA	NA	NA
		Medium†	Red	CFM	1255	1210	1145	1074	1008	940	878	895	838	785
				WATTS	249	272	284	292	305	319	320	329	336	347
				BHP	0.27	0.29	0.30	0.31	0.33	0.34	0.34	0.35	0.36	0.37
				Heating Rise (°F)	53	55	58	62	NA	NA	NA	NA	NA	NA
				Heating Rise (°C)	30	31	32	35	NA	NA	NA	NA	NA	NA
		Med-High‡	Orange	CFM	1335	1267	1246	1176	1109	1049	988	926	872	891
				WATTS	311	323	330	342	356	367	378	385	395	403
				BHP	0.33	0.35	0.35	0.37	0.38	0.39	0.41	0.41	0.42	0.43
				Heating Rise (°F)	50	53	54	57	60	64	NA	NA	NA	NA
				Heating Rise (°C)	28	29	30	32	34	35	NA	NA	NA	NA
		High	Black	CFM	1472	1401	1326	1251	1275	1198	1139	1085	1023	961
				WATTS	401	414	426	440	471	462	473	478	486	491
				BHP	0.43	0.44	0.46	0.47	0.51	0.50	0.51	0.51	0.52	0.53
				Heating Rise (°F)	45	48	50	53	52	56	59	62	65	NA
				Heating Rise (°C)	25	27	28	30	29	31	33	34	36	NA

Manufacturer reserves the right to change, at any time, specifications and designs without notice and without obligations.

Dry Coil Air Delivery* - Downflow Discharge Sizes 36-60 3 Phase Models Only (Continued)

Unit	Heating Rise Range	Motor Speed	Wire Color		External Static Pressure (IN. W.C.)									
					0.1	0.2	0.3	0.4	0.5	0.6	0.7	0.8	0.9	1.0
48090	35 - 65°F (19 - 36°C)	Low†	Blue	CFM	1503	1457	1423	1374	1330	1287	1241	1199	1153	1111
				WATTS	225	233	246	254	269	282	292	307	314	329
				BHP	0.24	0.25	0.26	0.27	0.29	0.30	0.31	0.33	0.34	0.35
				Heating Rise (°F)	45	46	47	49	50	52	54	56	58	60
				Heating Rise (°C)	25	26	26	27	28	29	30	31	32	33
		Med-Low†	Pink	CFM	1556	1508	1461	1432	1388	1346	1302	1256	1221	1168
				WATTS	244	261	268	281	290	305	319	330	345	353
				BHP	0.26	0.28	0.29	0.30	0.31	0.33	0.34	0.35	0.37	0.38
				Heating Rise (°F)	43	44	46	47	48	50	51	53	55	57
				Heating Rise (°C)	24	25	25	26	27	28	29	30	30	32
		Medium‡	Red	CFM	1861	1822	1786	1758	1716	1688	1660	1619	1583	1539
				WATTS	400	417	426	441	452	467	482	492	507	519
				BHP	0.43	0.45	0.46	0.47	0.48	0.50	0.52	0.53	0.54	0.56
				Heating Rise (°F)	36	37	37	38	39	40	40	41	42	43
				Heating Rise (°C)	20	20	21	21	22	22	22	23	23	24
		Med-High	Orange	CFM	2319	2291	2255	2230	2193	2166	2118	2057	1992	1887
				WATTS	758	769	787	799	808	823	822	805	780	737
				BHP	0.81	0.82	0.84	0.86	0.87	0.88	0.88	0.86	0.84	0.79
				Heating Rise (°F)	NA	NA	NA	NA	NA	NA	NA	NA	NA	35
				Heating Rise (°C)	NA	NA	NA	NA	NA	NA	NA	NA	NA	20
		High	Black	CFM	2532	2487	2444	2391	2330	2259	2179	2111	2033	1949
				WATTS	1014	1022	1015	994	965	935	898	858	823	786
				BHP	1.09	1.10	1.09	1.07	1.03	1.00	0.96	0.92	0.88	0.84
				Heating Rise (°F)	NA	NA	NA	NA	NA	NA	NA	NA	NA	NA
				Heating Rise (°C)	NA	NA	NA	NA	NA	NA	NA	NA	NA	NA
48115	30 - 60°F (17 - 33°C)	Low	Blue	CFM	1503	1457	1423	1374	1330	1287	1241	1199	1153	1111
				WATTS	225	233	246	254	269	282	292	307	314	329
				BHP	0.24	0.25	0.26	0.27	0.29	0.30	0.31	0.33	0.34	0.35
				Heating Rise (°F)	57	58	60	NA	NA	NA	NA	NA	NA	NA
				Heating Rise (°C)	31	32	33	NA	NA	NA	NA	NA	NA	NA
		Med-Low	Pink	CFM	1556	1508	1461	1432	1388	1346	1302	1256	1221	1168
				WATTS	244	261	268	281	290	305	319	330	345	353
				BHP	0.26	0.28	0.29	0.30	0.31	0.33	0.34	0.35	0.37	0.38
				Heating Rise (°F)	55	56	58	59	NA	NA	NA	NA	NA	NA
				Heating Rise (°C)	30	31	32	33	NA	NA	NA	NA	NA	NA
		Medium‡	Red	CFM	1861	1822	1786	1758	1716	1688	1660	1619	1583	1539
				WATTS	400	417	426	441	452	467	482	492	507	519
				BHP	0.43	0.45	0.46	0.47	0.48	0.50	0.52	0.53	0.54	0.56
				Heating Rise (°F)	46	47	48	48	50	50	51	53	54	55
				Heating Rise (°C)	25	26	26	27	28	28	29	29	30	31
		Med-High†	Orange	CFM	2319	2291	2255	2230	2193	2166	2118	2057	1992	1887
				WATTS	758	769	787	799	808	823	822	805	780	737
				BHP	0.81	0.82	0.84	0.86	0.87	0.88	0.88	0.86	0.84	0.79
				Heating Rise (°F)	37	37	38	38	39	39	40	41	43	45
				Heating Rise (°C)	20	21	21	21	22	22	22	23	24	25
		High	Black	CFM	2532	2487	2444	2391	2330	2259	2179	2111	2033	1949
				WATTS	1014	1022	1015	994	965	935	898	858	823	786
				BHP	1.09	1.10	1.09	1.07	1.03	1.00	0.96	0.92	0.88	0.84
				Heating Rise (°F)	34	34	35	36	37	38	39	40	42	44
				Heating Rise (°C)	19	19	19	20	20	21	22	22	23	24

Manufacturer reserves the right to change, at any time, specifications and designs without notice and without obligations.

Dry Coil Air Delivery* - Downflow Discharge Sizes 36-60 3 Phase Models Only (Continued)

Unit	Heating Rise Range	Motor Speed	Wire Color		External Static Pressure (IN. W.C.)									
					0.1	0.2	0.3	0.4	0.5	0.6	0.7	0.8	0.9	1.0
48130	35 - 65°F (19 - 36°C)	Low	Blue	CFM	1503	1457	1423	1374	1330	1287	1241	1199	1153	1111
				WATTS	225	233	246	254	269	282	292	307	314	329
				BHP	0.24	0.25	0.26	0.27	0.29	0.30	0.31	0.33	0.34	0.35
				Heating Rise (°F)	63	65	NA	NA	NA	NA	NA	NA	NA	NA
				Heating Rise (°C)	35	36	NA	NA	NA	NA	NA	NA	NA	NA
		Med-Low	Pink	CFM	1556	1508	1461	1432	1388	1346	1302	1256	1221	1168
				WATTS	244	261	268	281	290	305	319	330	345	353
				BHP	0.26	0.28	0.29	0.30	0.31	0.33	0.34	0.35	0.37	0.38
				Heating Rise (°F)	61	63	65	NA	NA	NA	NA	NA	NA	NA
				Heating Rise (°C)	34	35	36	NA	NA	NA	NA	NA	NA	NA
		Medium‡	Red	CFM	1861	1822	1786	1758	1716	1688	1660	1619	1583	1539
				WATTS	400	417	426	441	452	467	482	492	507	519
				BHP	0.43	0.45	0.46	0.47	0.48	0.50	0.52	0.53	0.54	0.56
				Heating Rise (°F)	51	52	53	54	55	56	57	59	60	62
				Heating Rise (°C)	28	29	30	30	31	31	32	33	33	34
		Med-High†	Orange	CFM	2319	2291	2255	2230	2193	2166	2118	2057	1992	1887
				WATTS	758	769	787	799	808	823	822	805	780	737
				BHP	0.81	0.82	0.84	0.86	0.87	0.88	0.88	0.86	0.84	0.79
				Heating Rise (°F)	41	42	42	43	43	44	45	46	48	50
				Heating Rise (°C)	23	23	23	24	24	24	25	26	27	28
		High	Black	CFM	2532	2487	2444	2391	2330	2259	2179	2111	2033	1949
				WATTS	1014	1022	1015	994	965	935	898	858	823	786
				BHP	1.09	1.10	1.09	1.07	1.03	1.00	0.96	0.92	0.88	0.84
				Heating Rise (°F)	38	38	39	40	41	42	44	45	47	49
				Heating Rise (°C)	21	21	22	22	23	23	24	25	26	27
60090	35 - 65°F (19 - 36°C)	Low†	Blue	CFM	1479	1436	1387	1346	1298	1253	1206	1160	1114	1061
				WATTS	224	239	247	262	270	284	300	307	319	330
				BHP	0.24	0.26	0.26	0.28	0.29	0.30	0.32	0.33	0.34	0.35
				Heating Rise (°F)	46	47	49	51	52	54	56	59	61	64
				Heating Rise (°C)	26	26	27	28	29	30	31	33	34	36
		Med-Low	Pink	CFM	1841	1796	1761	1724	1690	1651	1616	1578	1527	1478
				WATTS	425	434	453	460	476	485	501	508	525	542
				BHP	0.46	0.47	0.49	0.49	0.51	0.52	0.54	0.54	0.56	0.58
				Heating Rise (°F)	36	37	38	39	40	41	41	42	44	45
				Heating Rise (°C)	20	21	21	22	22	23	23	24	24	25
		Medium‡	Red	CFM	1944	1913	1872	1838	1801	1771	1731	1698	1655	1613
				WATTS	486	501	511	529	537	554	565	578	595	603
				BHP	0.52	0.54	0.55	0.57	0.58	0.59	0.61	0.62	0.64	0.65
				Heating Rise (°F)	34	35	36	36	37	38	39	39	40	41
				Heating Rise (°C)	19	19	20	20	21	21	21	22	22	23
		Med-High	Orange	CFM	2178	2148	2105	2073	2036	2002	1967	1919	1845	1751
				WATTS	674	691	703	717	733	743	758	754	734	701
				BHP	0.72	0.74	0.75	0.77	0.79	0.80	0.81	0.81	0.79	0.75
				Heating Rise (°F)	NA	NA	NA	NA	NA	NA	NA	35	36	38
				Heating Rise (°C)	NA	NA	NA	NA	NA	NA	NA	19	20	21
		High	Black	CFM	2480	2432	2375	2322	2236	2161	2085	2006	1917	1808
				WATTS	1029	1012	995	975	941	908	869	836	796	751
				BHP	1.10	1.09	1.07	1.05	1.01	0.97	0.93	0.90	0.85	0.81
				Heating Rise (°F)	NA	NA	NA	NA	NA	NA	NA	NA	35	37
				Heating Rise (°C)	NA	NA	NA	NA	NA	NA	NA	NA	19	21

Manufacturer reserves the right to change, at any time, specifications and designs without notice and without obligations.

Dry Coil Air Delivery* - Downflow Discharge Sizes 36-60 3 Phase Models Only (Continued)

Unit	Heating Rise Range	Motor Speed	Wire Color		External Static Pressure (IN. W.C.)									
					0.1	0.2	0.3	0.4	0.5	0.6	0.7	0.8	0.9	1.0
60115	30 - 60°F (17 - 33°C)	Low	Blue	CFM	1479	1436	1387	1346	1298	1253	1206	1160	1114	1061
				WATTS	224	239	247	262	270	284	300	307	319	330
				BHP	0.24	0.26	0.26	0.28	0.29	0.30	0.32	0.33	0.34	0.35
				Heating Rise (°F)	58	59	NA	NA	NA	NA	NA	NA	NA	NA
				Heating Rise (°C)	32	33	NA	NA	NA	NA	NA	NA	NA	NA
		Med-Low	Pink	CFM	1841	1796	1761	1724	1690	1651	1616	1578	1527	1478
				WATTS	425	434	453	460	476	485	501	508	525	542
				BHP	0.46	0.47	0.49	0.49	0.51	0.52	0.54	0.54	0.56	0.58
				Heating Rise (°F)	46	47	48	49	50	52	53	54	56	58
				Heating Rise (°C)	26	26	27	27	28	29	29	30	31	32
		Medium‡	Red	CFM	1944	1913	1872	1838	1801	1771	1731	1698	1655	1613
				WATTS	486	501	511	529	537	554	565	578	595	603
				BHP	0.52	0.54	0.55	0.57	0.58	0.59	0.61	0.62	0.64	0.65
				Heating Rise (°F)	44	45	46	46	47	48	49	50	51	53
				Heating Rise (°C)	24	25	25	26	26	27	27	28	29	29
		Med-High†	Orange	CFM	2178	2148	2105	2073	2036	2002	1967	1919	1845	1751
				WATTS	674	691	703	717	733	743	758	754	734	701
				BHP	0.72	0.74	0.75	0.77	0.79	0.80	0.81	0.81	0.79	0.75
				Heating Rise (°F)	39	40	40	41	42	43	43	44	46	49
				Heating Rise (°C)	22	22	22	23	23	24	24	25	26	27
		High	Black	CFM	2480	2432	2375	2322	2236	2161	2085	2006	1917	1808
				WATTS	1029	1012	995	975	941	908	869	836	796	751
				BHP	1.10	1.09	1.07	1.05	1.01	0.97	0.93	0.90	0.85	0.81
				Heating Rise (°F)	NA	35	36	37	38	39	41	42	44	47
				Heating Rise (°C)	NA	19	20	20	21	22	23	24	25	26
60130	35 - 65°F (19 - 36°C)	Low	Blue	CFM	1479	1436	1387	1346	1298	1253	1206	1160	1114	1061
				WATTS	224	239	247	262	270	284	300	307	319	330
				BHP	0.24	0.26	0.26	0.28	0.29	0.30	0.32	0.33	0.34	0.35
				Heating Rise (°F)	64	NA	NA	NA	NA	NA	NA	NA	NA	NA
				Heating Rise (°C)	36	NA	NA	NA	NA	NA	NA	NA	NA	NA
		Med-Low	Pink	CFM	1841	1796	1761	1724	1690	1651	1616	1578	1527	1478
				WATTS	425	434	453	460	476	485	501	508	525	542
				BHP	0.46	0.47	0.49	0.49	0.51	0.52	0.54	0.54	0.56	0.58
				Heating Rise (°F)	52	53	54	55	56	58	59	60	62	64
				Heating Rise (°C)	29	29	30	31	31	32	33	34	35	36
		Medium‡	Red	CFM	1944	1913	1872	1838	1801	1771	1731	1698	1655	1613
				WATTS	486	501	511	529	537	554	565	578	595	603
				BHP	0.52	0.54	0.55	0.57	0.58	0.59	0.61	0.62	0.64	0.65
				Heating Rise (°F)	49	50	51	52	53	54	55	56	58	59
				Heating Rise (°C)	27	28	28	29	29	30	31	31	32	33
		Med-High†	Orange	CFM	2178	2148	2105	2073	2036	2002	1967	1919	1845	1751
				WATTS	674	691	703	717	733	743	758	754	734	701
				BHP	0.72	0.74	0.75	0.77	0.79	0.80	0.81	0.81	0.79	0.75
				Heating Rise (°F)	44	44	45	46	47	48	48	50	52	54
				Heating Rise (°C)	24	25	25	26	26	26	27	28	29	30
		High	Black	CFM	2480	2432	2375	2322	2236	2161	2085	2006	1917	1808
				WATTS	1029	1012	995	975	941	908	869	836	796	751
				BHP	1.10	1.09	1.07	1.05	1.01	0.97	0.93	0.90	0.85	0.81
				Heating Rise (°F)	38	39	40	41	43	44	46	47	50	53
				Heating Rise (°C)	21	22	22	23	24	24	25	26	28	29

Shaded areas indicate speed/static combinations that are not permitted for dehumidification speed.

*. Air delivery values are without air filter and are for dry coil (See Wet Coil Pressure Drop table).
†. Factory-shipped heating speed
‡. Factory-shipped cooling speed
"NA" = Not allowed for heating speed
NOTE: Deduct field-supplied air filter pressure drop and wet coil pressure drop to obtain external static pressure available for ducting.

Manufacturer reserves the right to change, at any time, specifications and designs without notice and without obligations.

Wet Coil Pressure Drop (IN.W.C)

Unit Size	Standard CFM (SCFM)																
	600	700	800	900	1000	1100	1200	1300	1400	1500	1600	1700	1800	1900	2000	2100	2200
24	0.03	0.04	0.04	0.05	0.06												
30				0.05	0.06	0.07	0.08	0.11									
36				0.06	0.06	0.09	0.10	0.11	0.14								
42					0.05	0.05	0.06	0.07	0.08	0.08	0.09	0.09	0.11				
48							0.04	0.06	0.09	0.10	0.10	0.11	0.12	0.13	0.14		
60										0.06	0.07	0.01	0.08	0.09	0.10	0.12	0.13

Economizer with 1-in. Filter Pressure Drop (IN. W.C.)

Filter Size in. (mm)	Cooling Tons	Standard CFM (SCFM)																
		600	700	800	900	1000	1100	1200	1300	1400	1500	1600	1700	1800	1900	2000	2100	2200
600-1400 CFM 12x20x1+12x20x1 (305x508x25+305x508x25)	2.0, 2.5, 3.0	-	-	0.09	0.14	0.16	0.18	0.25	0.28	0.30	-	-	-	-	-	-	-	-
1200-1800 CFM 16x24x1+14x24x1 (406x610x25+356x610x25)	3.5, 4.0	-	-	-	-	-	-	0.10	0.11	0.12	0.13	0.14	0.16	0.16	-	-	-	-
1500-2200 CFM 16x24x1+18x24x1 (406x610x25+457x610x25)	5.0	-	-	-	-	-	-	-	-	-	0.15	0.17	0.18	0.20	0.21	0.22	0.23	0.23

Filter Pressure Drop Table (IN. W.C.)

Filter Size in. (mm)	Cooling Tons	Standard CFM (SCFM)																
		600	700	800	900	1000	1100	1200	1300	1400	1500	1600	1700	1800	1900	2000	2100	2200
600-1400 CFM 12x20x1+12x20x1 (305x508x25+305x508x25)	2.0, 2.5, 3.0	0.03	0.05	0.06	0.08	0.10	0.11	0.13	0.14	0.16	-	-	-	-	-	-	-	-
1200-1800 CFM 16x24x1+14x24x1 (406x610x25+356x610x25)	3.5, 4.0	-	-	-	-	-	-	0.07	0.08	0.09	0.09	0.10	0.11	0.12	-	-	-	-
1500-2200 CFM 16x24x1+18x24x1 (406x610x25+457x610x25)	5.0	-	-	-	-	-	-	-	-	-	0.04	0.06	0.08	0.10	0.11	0.13	0.14	0.15

Manufacturer reserves the right to change, at any time, specifications and designs without notice and without obligations.

TYPICAL PIPING AND WIRING

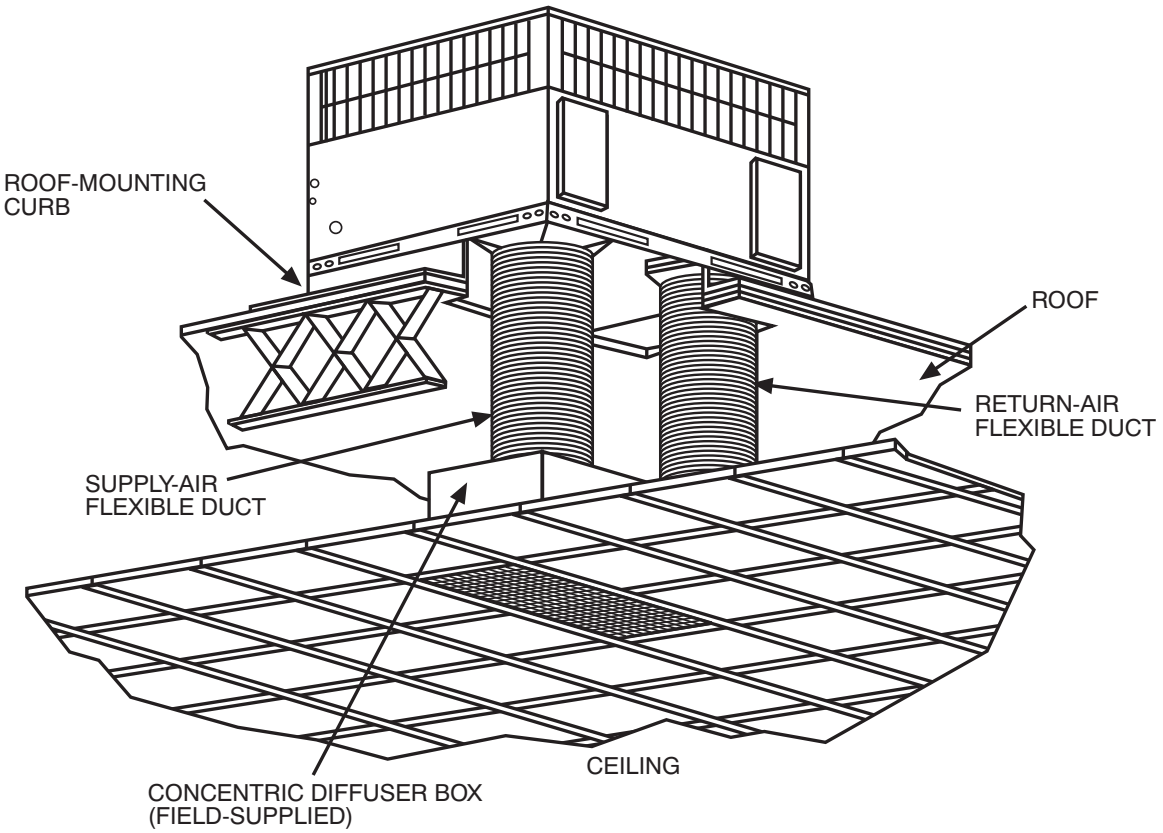

A09230

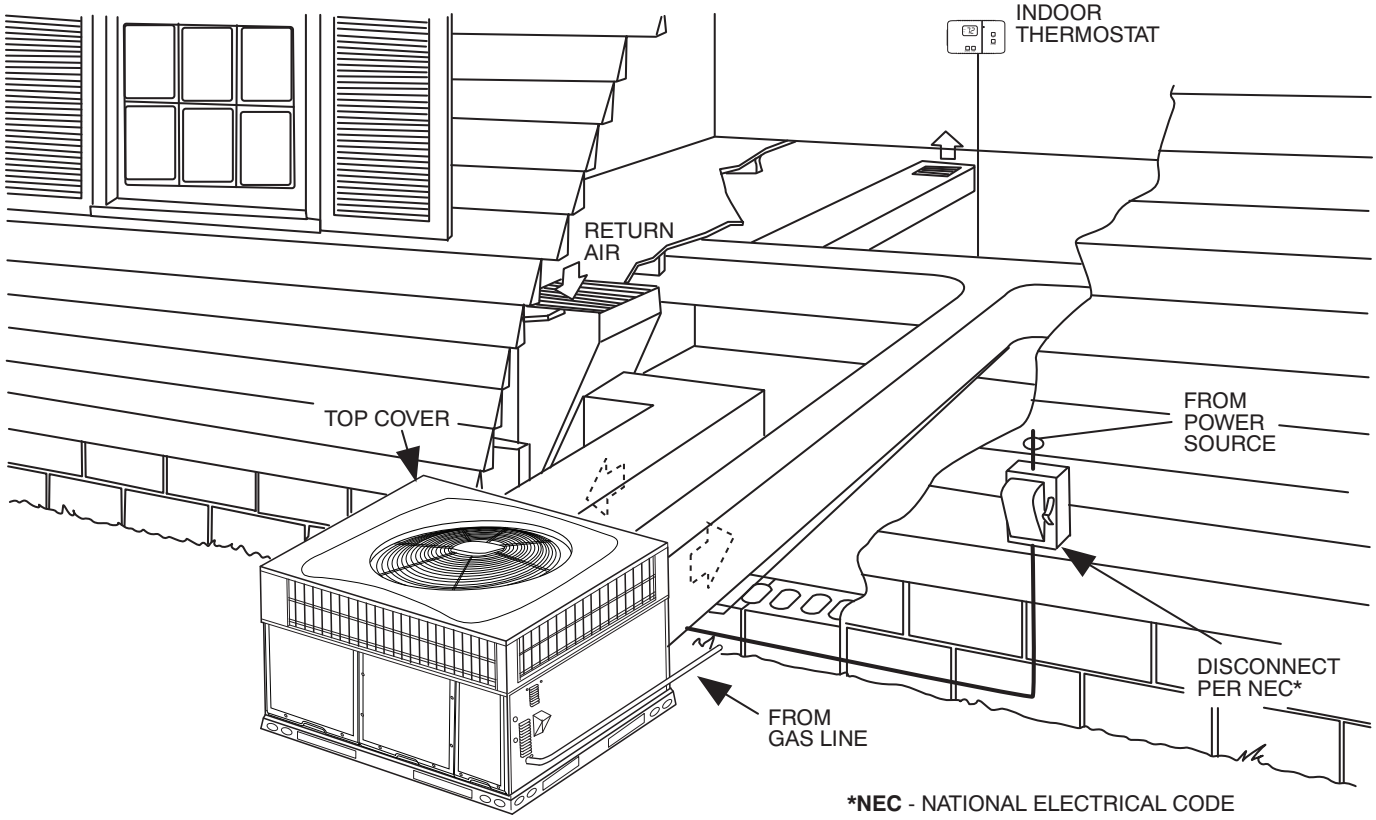

A09231

Application Data

Condensate trap — A 2-in. (50.8 mm) condensate trap must be field supplied.

Ductwork — Secure downflow discharge ductwork to roof curb. For horizontal discharge applications, attach ductwork to unit with flanges.

To convert a unit to downflow discharge — Units are equipped with factory-installed inserts in the down-flow openings. Removal of the inserts is similar to removing an electrical knock-out. Use the duct cover to seal the horizontal discharge openings in the unit. Units installed in horizontal discharge orientation do not require duct covers.

Airflow — Units are draw-thru in the cooling mode and blow-thru in the heating mode.

Maximum cooling airflow — To minimize the possibility of condensate blow-off from the evaporator, airflow through the units should not exceed 450 CFM per ton.

Minimum cooling airflow — Minimum cooling airflow is 350 cfm per ton.

Minimum ambient cooling operation temperature — All standard units have a minimum ambient operating temperature of 40°F (4°C). With accessory low ambient temperature kit, units can operate at temperatures down to 0°F (-17°C).

Minimum temperature — Air entering the heat exchanger in heating mode must be a minimum of 50°F (10°C) continuous and/or 45°F (7°C) intermittent.

Manufacturer reserves the right to change, at any time, specifications and designs without notice and without obligations.

Electrical Data

MODEL	NOMINAL V-PH-HZ	VOLTAGE RANGE		COMPRESSOR		OFM	IFM	IDM	POWER SUPPLY	
		MIN	MAX	RLA	LRA	FLA	FLA	FLA	MCA	MOCP
2404030	208/230-1-60	197	253	8.7	46	0.6	3.9	0.65	15.4	20
2406030	208/230-1-60	197	253	8.7	46	0.6	3.9	0.65	15.4	20
3004030	208/230-1-60	197	253	13.2	57	0.7	3.9	0.65	21.1	30
3006030	208/230-1-60	197	253	13.2	57	0.7	3.9	0.65	21.1	30
3606030	208/230-1-60	197	253	16.7	79	1.05	5.8	0.65	27.8	40
3606050	208/230-3-60	197	253	10.4	73	1.05	6.0	1.65	20.1	30
3606060	460-3-60	414	506	5.8	38	0.53	3.2	0.65	11.0	15
3609030	208/230-1-60	197	253	16.7	79	1.05	5.8	0.75	27.8	40
3609050	208/230-3-60	197	253	10.4	73	1.05	6.0	0.52	20.1	30
3609060	460-3-60	414	506	5.8	38	0.53	3.2	0.30	11.0	15
4206030	208/230-1-60	197	253	16.7	109	1.05	3.8	0.65	25.8	40
4206050	208/230-3-60	197	253	11.2	88	1.05	4.1	1.65	19.2	30
4206060	460-3-60	414	506	5.6	44	0.53	3.2	0.65	10.7	15
4209030	208/230-1-60	197	253	16.7	109	1.05	3.8	0.65	25.8	40
4209050	208/230-3-60	197	253	11.2	88	1.05	4.1	0.65	19.2	30
4209060	460-3-60	414	506	5.6	44	0.53	3.2	0.33	10.7	15
4809030	208/230-1-60	197	253	19.6	130	1.05	6.9	0.65	32.5	50
4809050	208/230-3-60	197	253	13.7	83.1	1.05	7.6	0.65	25.8	35
4809060	460-3-60	414	506	6.2	41	0.53	4.0	0.33	12.3	15
4811530	208/230-1-60	197	253	19.6	130	1.05	6.9	0.65	32.5	50
4811550	208/230-3-60	197	253	13.7	83.1	1.05	7.6	1.65	25.8	35
4811560	460-3-60	414	506	6.2	41	0.53	4.0	0.65	12.3	15
4813030	208/230-1-60	197	253	19.6	130	1.05	6.9	0.75	32.5	50
4813050	208/230-3-60	197	253	13.7	83.1	1.05	7.6	0.52	25.8	35
4813060	460-3-60	414	506	6.2	41	0.53	4.0	0.30	12.3	15
6009030	208/230-1-60	197	253	23.7	152.5	1.05	6.9	0.65	37.6	60
6009050	208/230-3-60	197	253	15.9	110	1.05	7.6	0.65	28.6	40
6009060	460-3-60	414	506	7.1	52	0.53	4.0	0.33	13.4	20
6011530	208/230-1-60	197	253	23.7	152.5	1.05	6.9	0.65	37.6	60
6011550	208/230-3-60	197	253	15.9	110	1.05	7.6	1.65	28.6	40
6011560	460-3-60	414	506	7.1	52	0.53	4.0	0.65	13.4	20
6013030	208/230-1-60	197	253	23.7	152.5	1.05	6.9	0.75	37.6	60
6013050	208/230-3-60	197	253	15.9	110	1.05	7.6	0.52	28.6	40
6013060	460-3-60	414	506	7.1	52	0.53	4.0	0.30	13.4	20

LEGEND

FLA - Full Load Amps
IDM - Inducer Motor
IFM - Indoor Fan Motor
LRA -Locked Rotor Amps
MCA - Minimum Circuit Amps
MOCP - Maximum Over Current Protection
OFM - Outdoor Fan Motor
RLA - Rated Load Amps

NOTES:

1. In compliance with NEC (National Electrical Code) requirements for multimotor and combination load equipment (refer to NEC Articles 430 and 440), the overcurrent protective device for the unit shall be Power Supply fuse or circuit breaker.
2. Minimum wire size is based on 60 C copper wire. If other than 60 C wire is used, or if length exceeds wire length in table, determine size from NEC.
3. Unbalanced 3-Phase Supply Voltage
   Never operate a motor where a phase imbalance in supply voltage is greater than 2%. Use the following formula to determine the percentage of voltage imbalance

   % Voltage imbalance

   $$= 100 \times \frac{\text{max voltage deviation from average voltage}}{\text{average voltage}}$$

EXAMPLE: Supply voltage is 230-3-60.

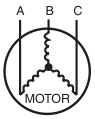

AB = 228 v
BC = 231 v
AC = 227 v

$$\text{Average Voltage} = \frac{228 + 231 + 227}{3} = \frac{686}{3} = 229$$

Determine maximum deviation from average voltage.
(AB) 229 - 228 = 1 v
(BC) 231 - 229 = 2 v
(AC) 229 - 227 = 2 v

Maximum deviation is 2 v.

Determine percent of voltage imbalance

$$\% \text{ Voltage Imbalance} = 100 \times \frac{2}{229} = 0.8\%$$

This amount of phase imbalance is satisfactory as it is below the maximum allowable 2%.

IMPORTANT: If the supply voltage phase imbalance is more than 2%, contact your local electric utility company immediately.

A06564

Connection Wiring Schematic 208/230-1-60

24, 36-60 Size

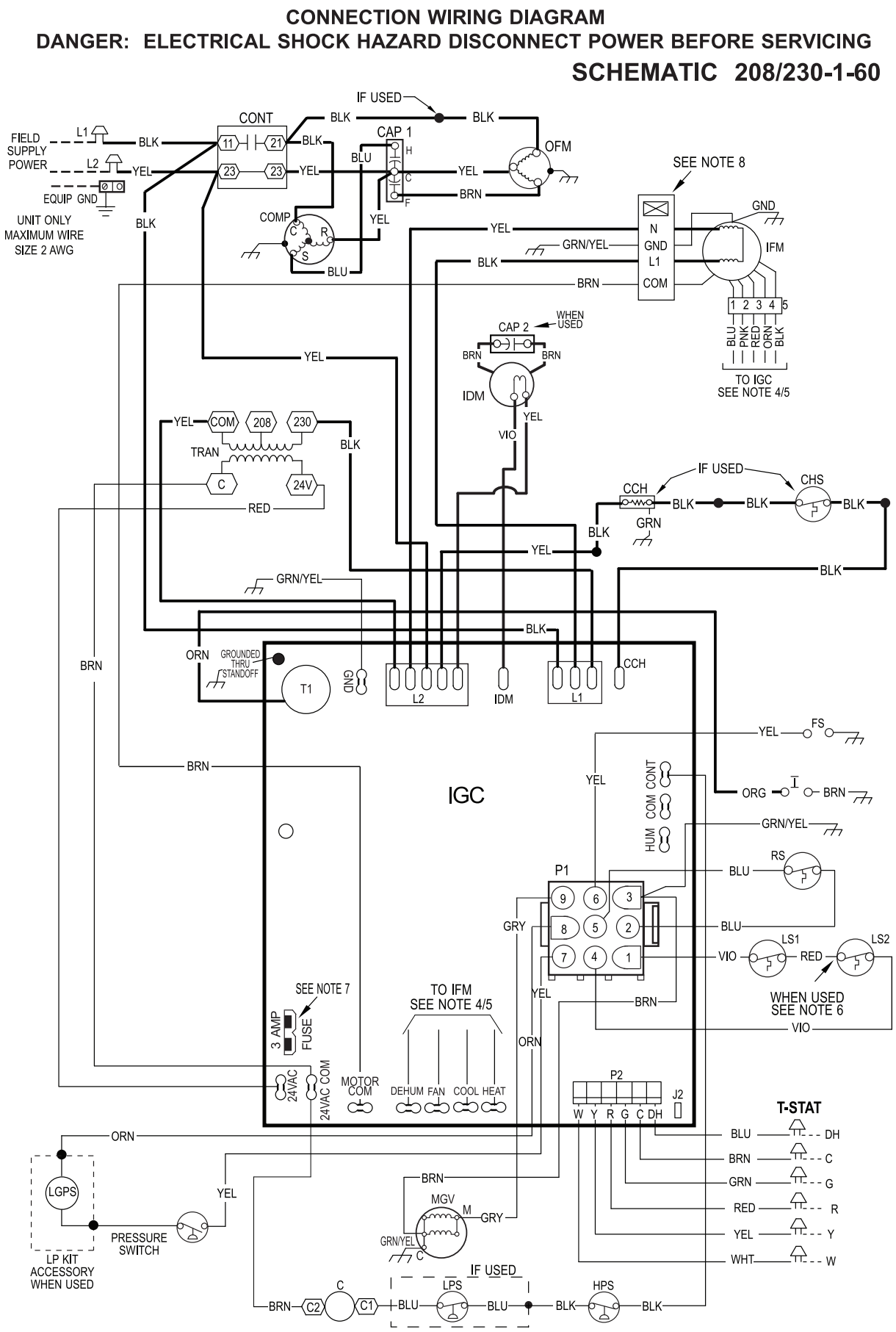

A150502

Ladder Wiring Schematic 208/230-1-60

24, 36-60 Size

LADDER WIRING DIAGRAM
DANGER: ELECTRICAL SHOCK HAZARD DISCONNECT POWER BEFORE SERVICING

LEGEND

	FIELD SPLICE	EQUIP	EQUIPMENT
	TERMINAL (MARKED)	FS	FLAME SENSOR
	TERMINAL (UNMARKED)	GND	GROUND
	SPLICE	HPS	HIGH PRESSURE SWITCH
	SPLICE (MARKED)	I	IGNITOR
	FACTORY LO VOLTAGE	IDM	INDUCED DRAFT MOTOR
	FIELD CONTROL WIRING	IFM	INDOOR FAN MOTOR
	FIELD POWER WIRING	IGC	INTERGRATED GAS UNIT CONTROLLER
	ACCESSORY OR OPTIONAL WIRING	LGPS	LOW GAS PRESSURE SWITCH (WHEN USED)
	FACTORY HI VOLTAGE	LPS	LOW PRESSURE SWITCH
C	CONTACTOR	LS1	PRIMARY LIMIT SWITCH
CAP1	CAPACITOR, COMP	LS2	SECONDARY LIMIT SWITCH
CAP2	CAPACITOR, INDUCER (WHEN USED)	MGV	MAIN GAS VALVE
CCH	CRANKCASE HEATER	OFM	OUTDOOR FAN MOTOR
CHS	CRANKCASE HEATER SWITCH	OT	QUADRUPLE TERMINAL
COMP	COMPRESSOR MOTOR	RS	ROLLOUT SWITCH
		TRAN	TRANSFORMER
		T-STAT	THERMOSTAT

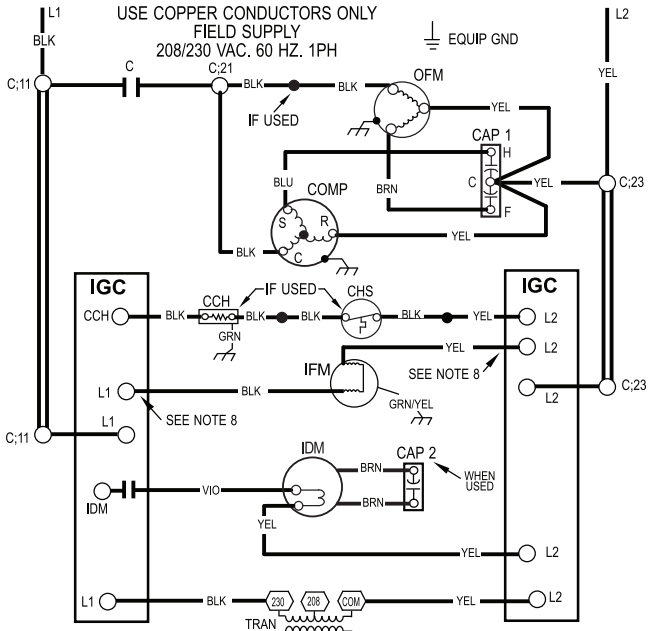

1Ø UNIT COMPONENT ARRANGEMENT

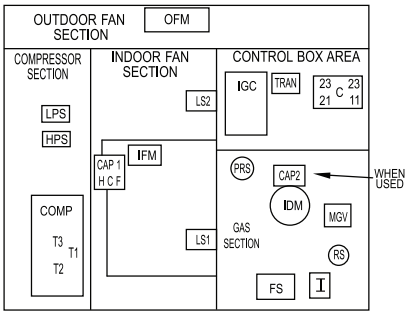

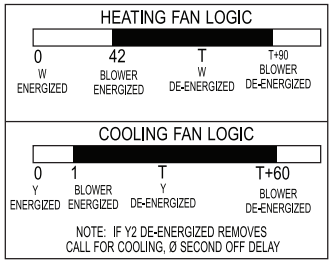

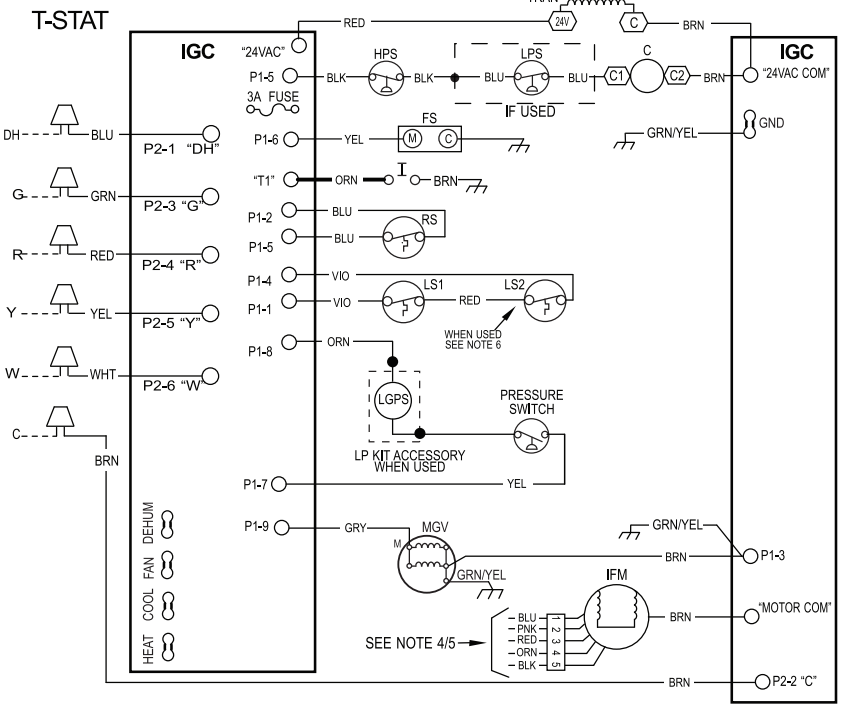

NOTES:

1. IF ANY OF THE ORIGINAL WIRES FURNISHED ARE REPLACED THEY MUST BE REPLACED WITH THE SAME WIRE OR IT'S EQUIVALENT.
2. SEE PRE-SALE LITERATURE FOR THERMOSTATS.
3. USE 75 DEGREES C COPPER CONDUCTORS FOR FIELD INSTALLATION.
4. REFER TO INSTALLATION INSTRUCTIONS FOR CORRECT SPEED SELECTION FOR IFM.
5. SEE INSTALLATION INSTRUCTIONS FOR PROPER HEATING AND COOLING CONNECTIONS FOR YOUR UNIT.
6. ON SOME MODELS LS1 AND LS2 ARE WIRED IN SERIES. ON OTHER MODELS ONLY LS1 IS USED.
7. THIS FUSE IS MANUFACTURED BY LITTLE FUSE, P/N 287003.
8. DO NOT DISCONNECT PLUG UNDER LOAD.
9. N.E.C. CLASS 2, 24V.

48VL500420 REV. -

A150510

Connection Wiring Schematic 208/230-1-60

30 Size

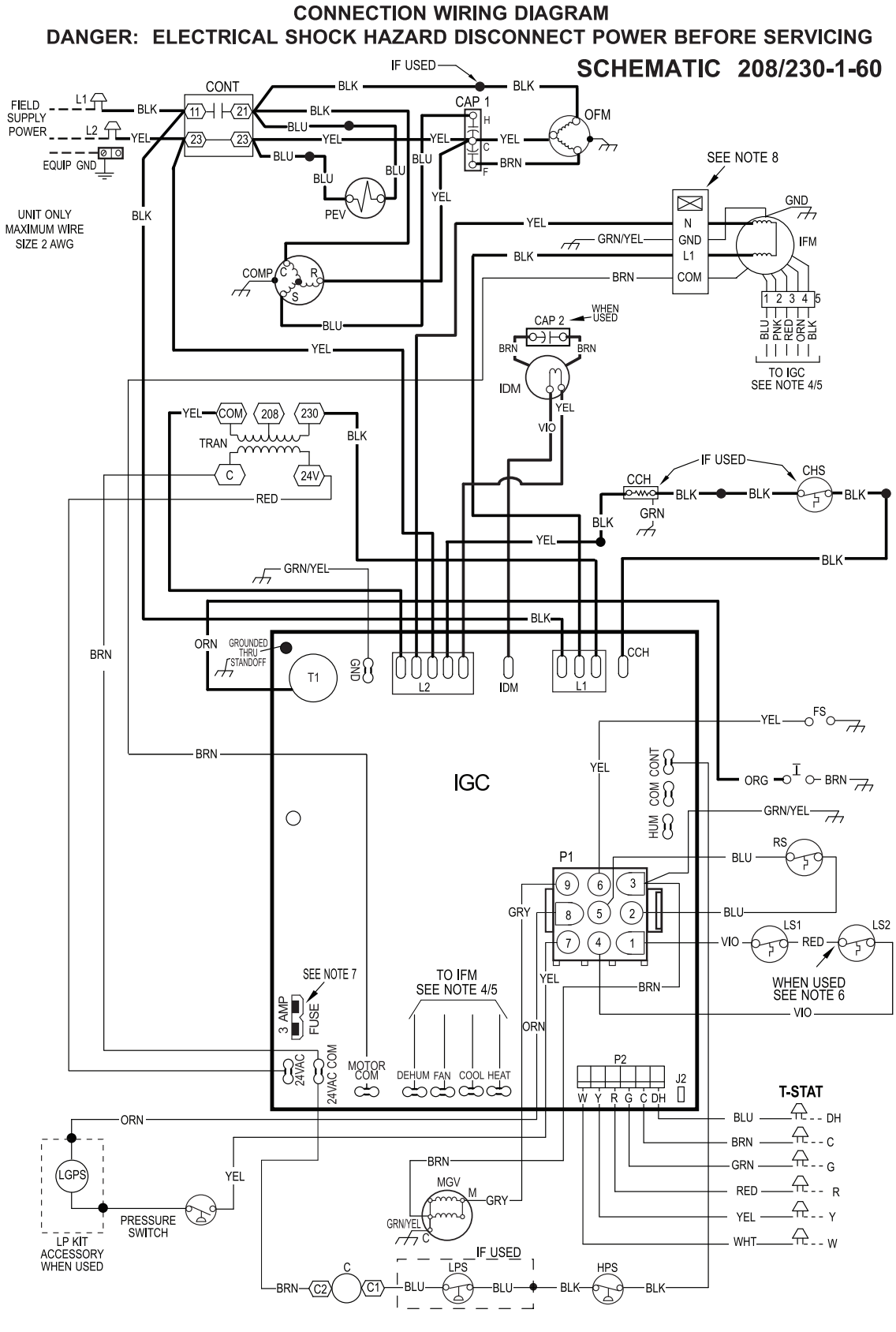

A200011

Ladder Wiring Schematic 208/230-1-60

30 Size

LADDER WIRING DIAGRAM
DANGER: ELECTRICAL SHOCK HAZARD DISCONNECT POWER BEFORE SERVICING

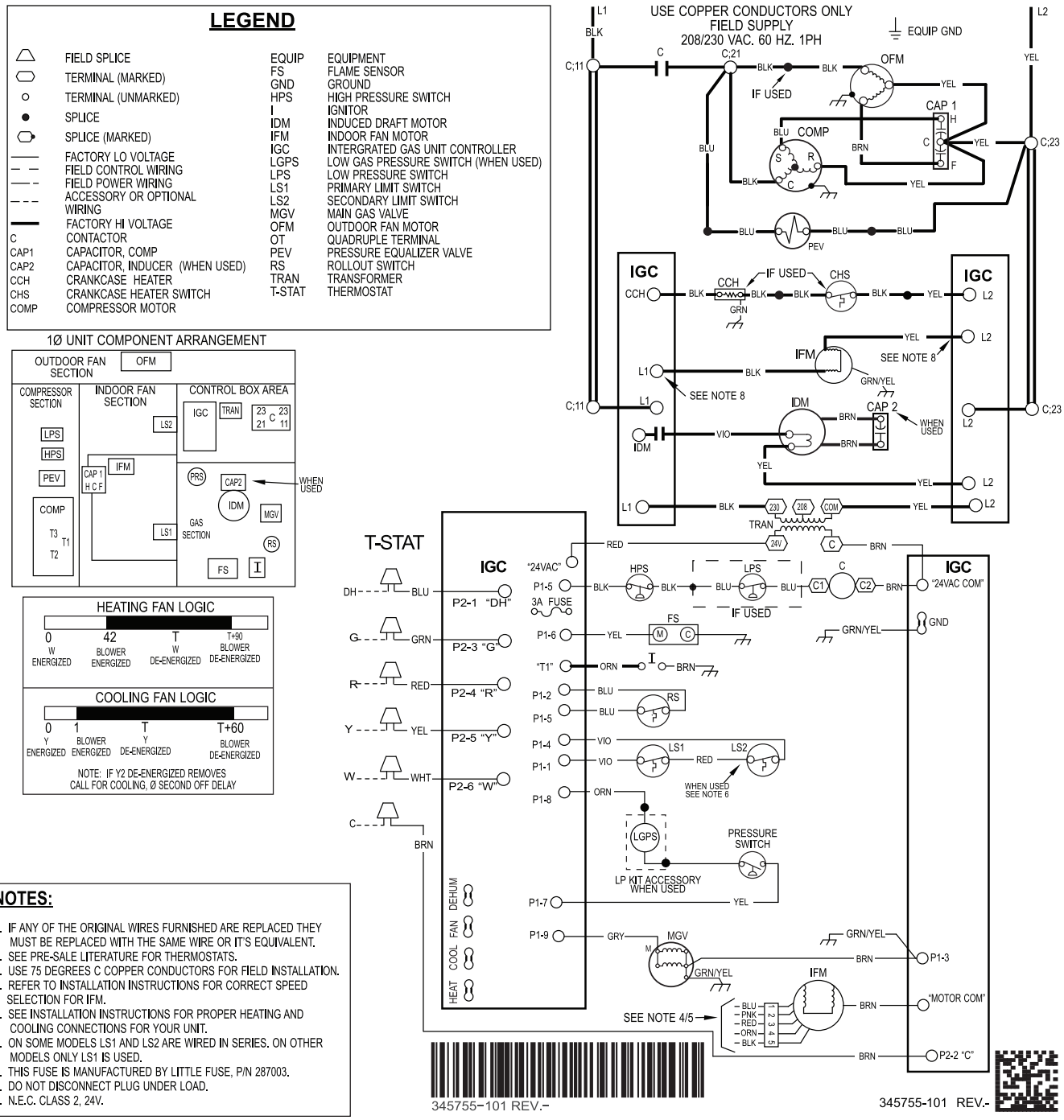

NOTES:

1. IF ANY OF THE ORIGINAL WIRES FURNISHED ARE REPLACED THEY MUST BE REPLACED WITH THE SAME WIRE OR IT'S EQUIVALENT.
2. SEE PRE-SALE LITERATURE FOR THERMOSTATS.
3. USE 75 DEGREES C COPPER CONDUCTORS FOR FIELD INSTALLATION.
4. REFER TO INSTALLATION INSTRUCTIONS FOR CORRECT SPEED SELECTION FOR IFM.
5. SEE INSTALLATION INSTRUCTIONS FOR PROPER HEATING AND COOLING CONNECTIONS FOR YOUR UNIT.
6. ON SOME MODELS LS1 AND LS2 ARE WIRED IN SERIES. ON OTHER MODELS ONLY LS1 IS USED.
7. THIS FUSE IS MANUFACTURED BY LITTLE FUSE, P/N 287003.
8. DO NOT DISCONNECT PLUG UNDER LOAD.
9. N.E.C. CLASS 2, 24V.

A200012

Connection Wiring Schematic 208/230-3-60

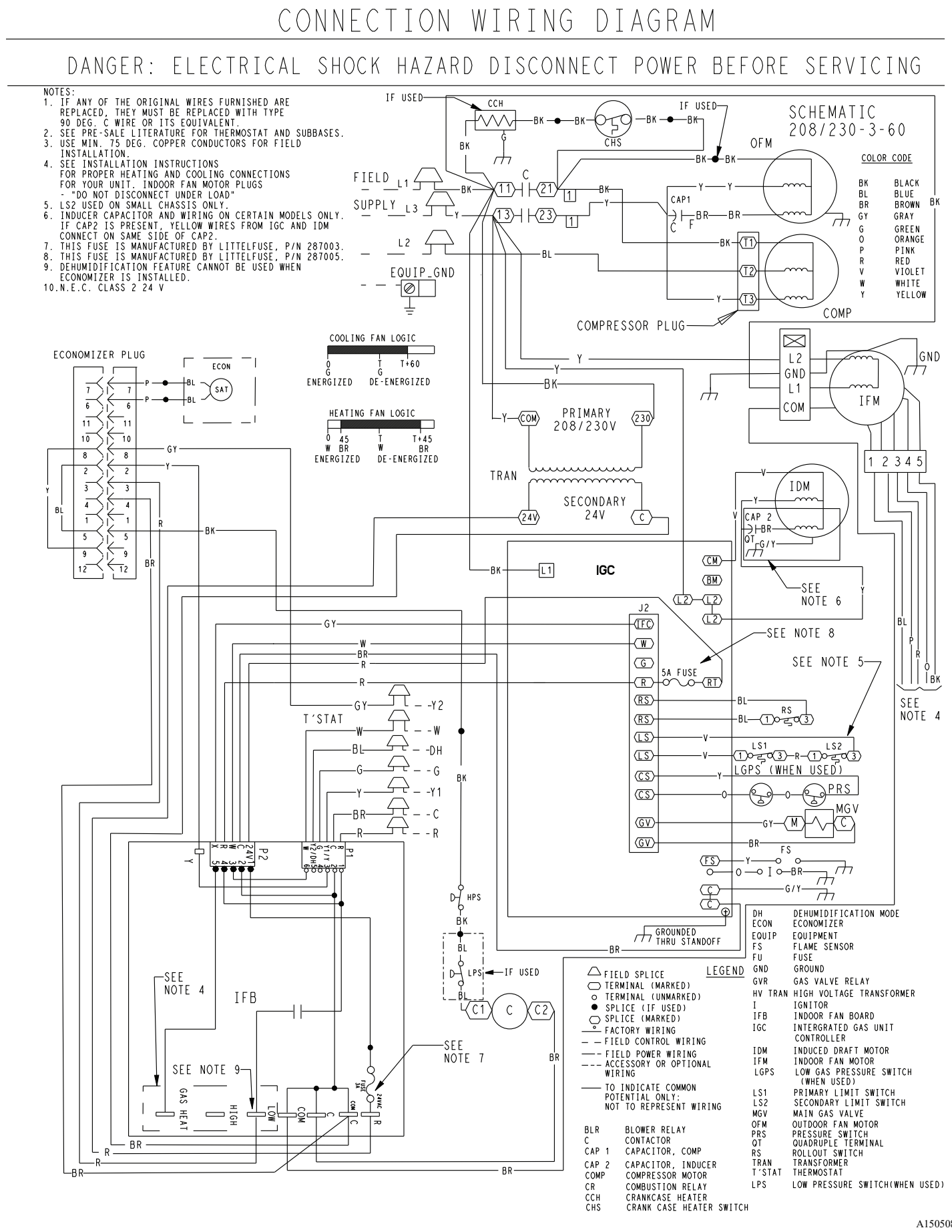

Ladder Wiring Schematic 208/230-3-60

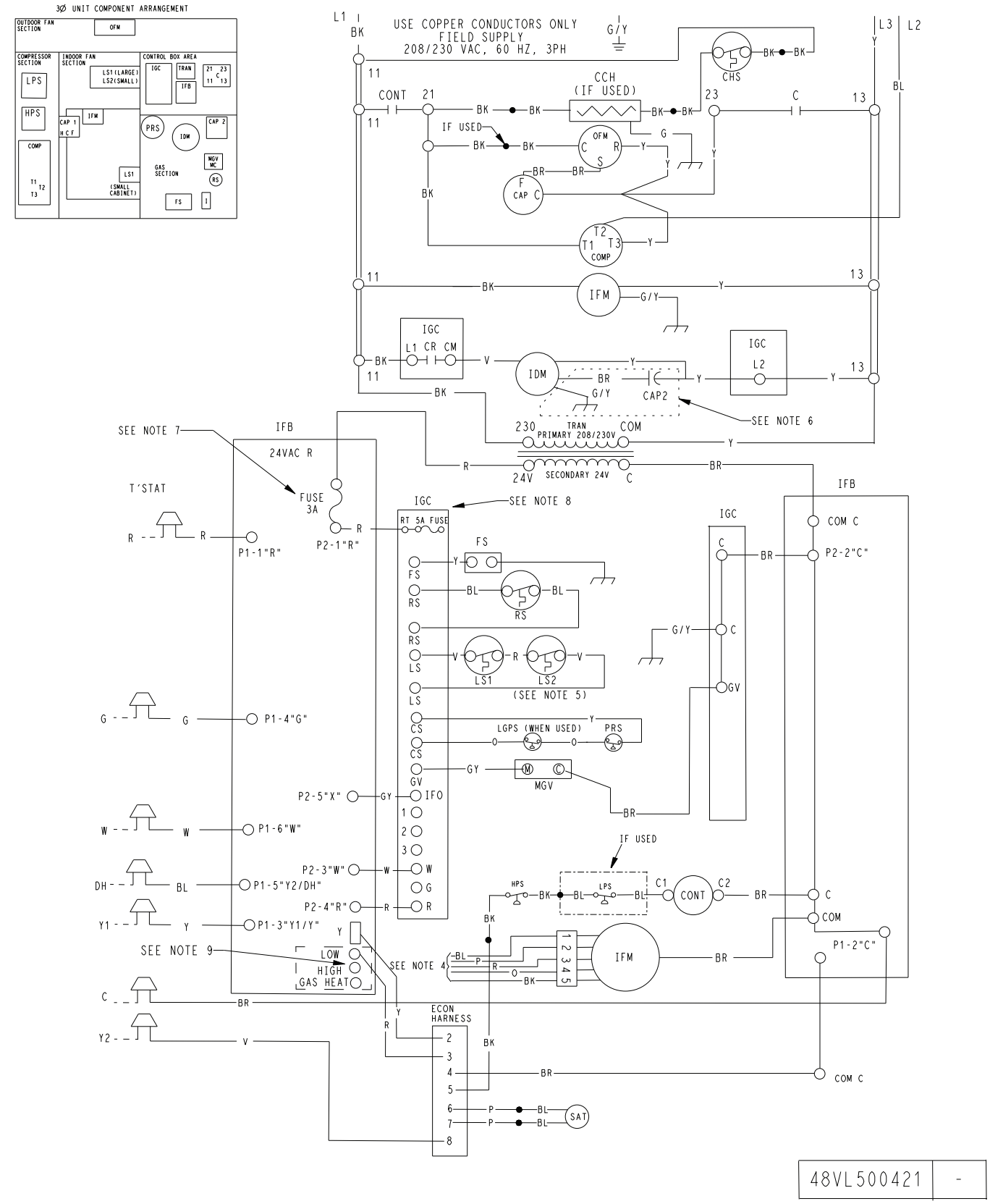

Connection Wiring Schematic 460-3-60

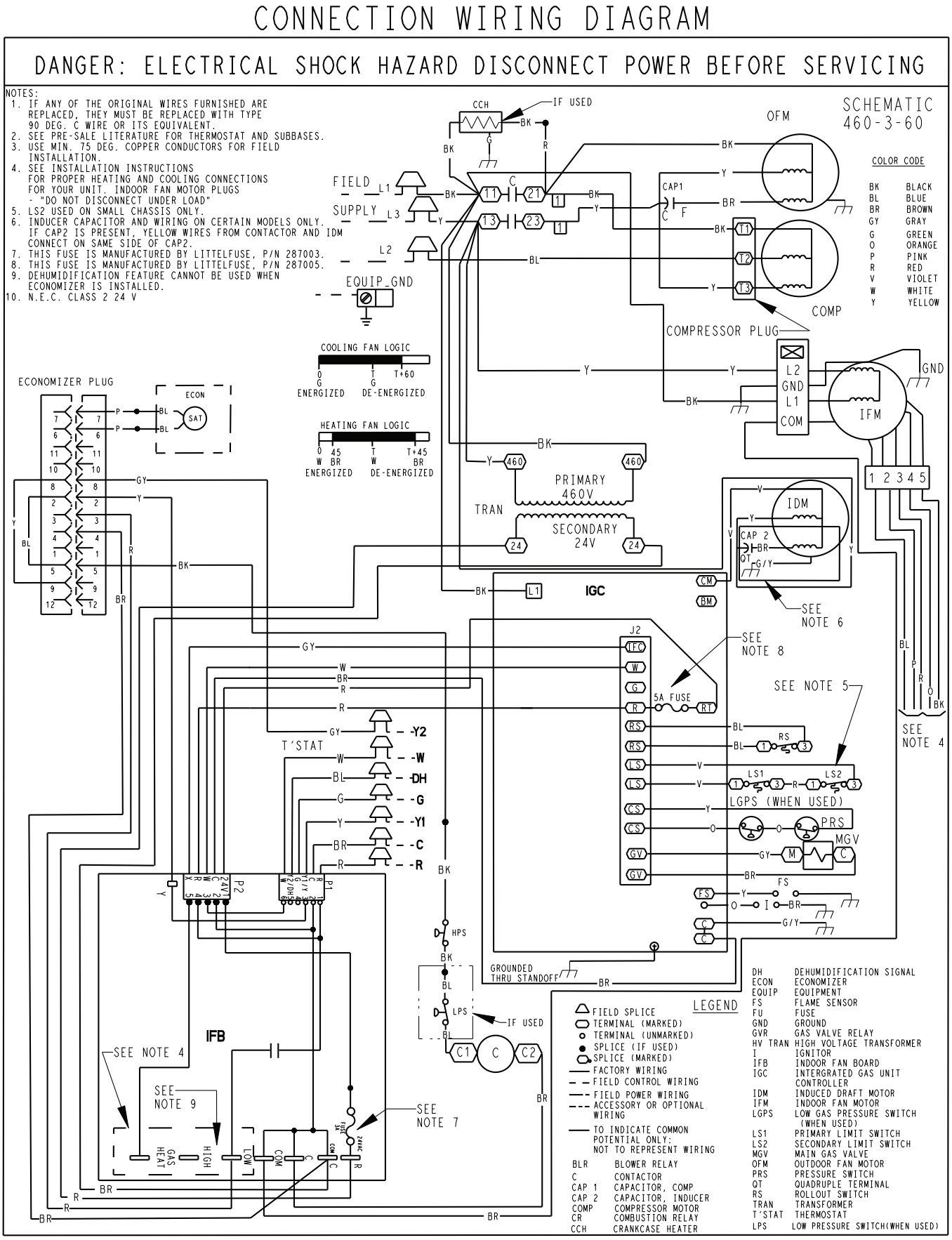

Ladder Wiring Schematic 460-3-60

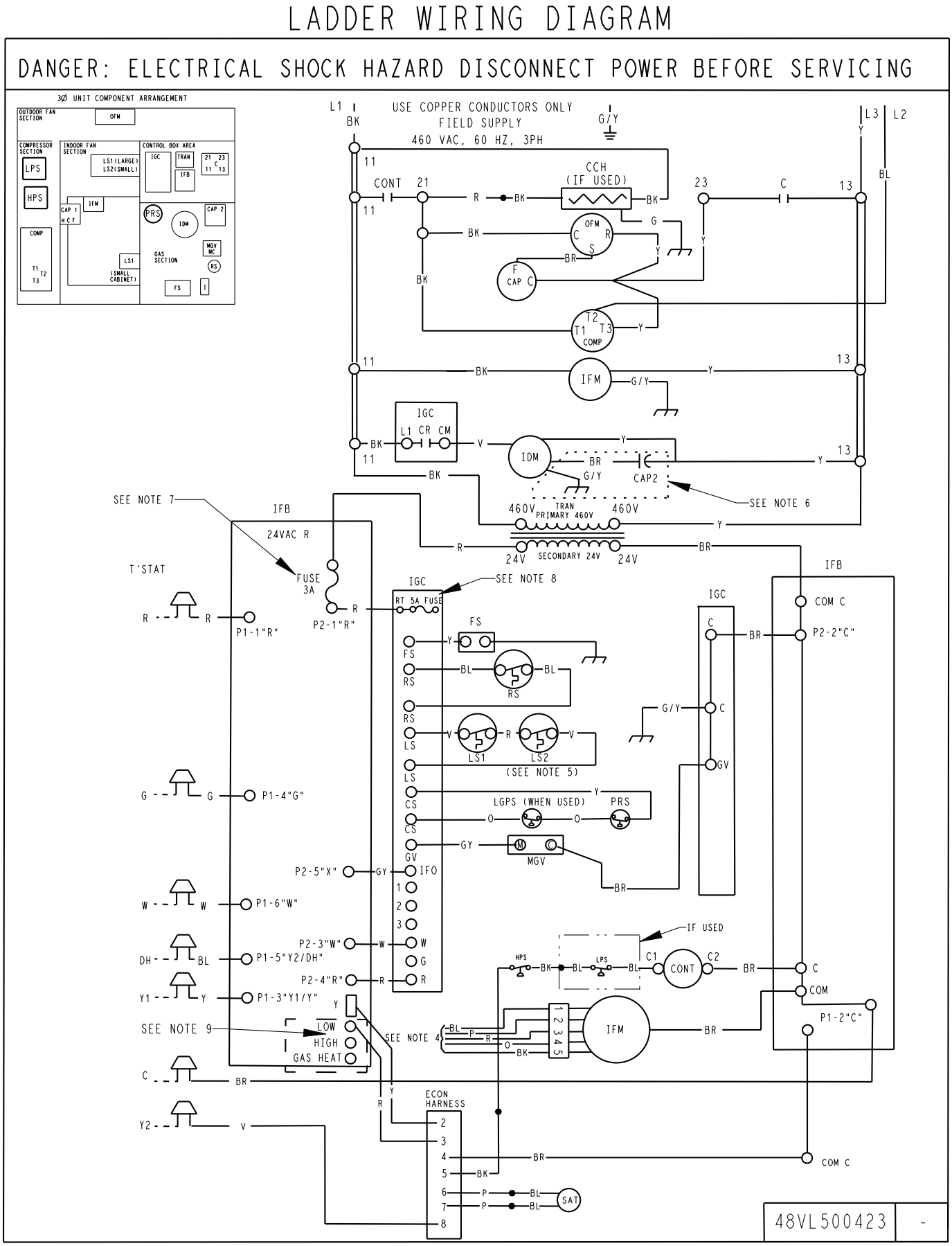

A150512

Controls

Operating sequence

Heating (Single Phase Models) - (See unit wiring label) On a call for heating, terminal W of the thermostat is energized, starting the induced-draft motor for a 5 second pre-purge. When the pressure switch senses that the induced-draft motor is moving sufficient combustion air, the burner sequence begins. his function is controlled by the integrated gas unit controller (IGC). The indoor (evaporator) –fan motor is energized 30 seconds after flame is established. When the thermostat is satisfied and W is de-energized, the burners stop firing and the indoor (evaporator) fan motor shuts off after a 90 second time-off delay. Please note that the IGC has the capability to automatically reduce the indoor fan motor on delay and increase the indoor fan motor off delay in the event of high duct static and/or a partially-clogged filter.

Heating (Three Phase Models) - On a call for heating, terminal W of the thermostat is energized, starting the induced-draft motor. When the pressure switch senses that the induced-draft motor is moving sufficient combustion air, the burner sequence begins. This function is performed by the integrated gas unit controller (IGC). The indoor (evaporator)-fan motor is energized 45 sec after flame is established. When the thermostat is satisfied and W is de-energized, the burners stop firing and the indoor (evaporator) fan motor shuts off after a 45-sec time-off delay. Please note that the IGC has the capability to automatically reduce the indoor fan motor on delay and increase the indoor fan motor off delay in the event of high duct static and/or partially-clogged filter.

Cooling — When the system thermostat calls for cooling, 24 V is supplied to the “Y” and “G” terminals of the thermostat. This completes the circuit to the contactor coil (C) and indoor (evaporator) fan relay (IFR). The normally open contacts of energized C close and complete the circuit through compressor motor (COMP) to outdoor (condenser) fan motor (OFM). Both motors start instantly. The set of normally open contacts of energized IFR close and complete the circuit through IFM. The IFM starts instantly.

On the loss of the thermostat call for cooling, 24 V is removed from both the “Y” and “G” terminals (provided the fan switch is in the “AUTO” position) de-energizing the compressor contactor and opening the contacts supplying power to compressor/OFM. After a 60-second delay (1-phase) or 90-second delay (3-phase), the IFM shuts off. If the thermostat fan selector switch is in the “ON” position, the IFM will run continuously.

NOTE: On units with a Time Guard® II device: Once the compressor has started and then stopped, it cannot be restarted again until 5 minutes have elapsed.

Guide Specifications

Packaged Gas Heating/Electric Cooling Units Constant Volume Application

HVAC Guide Specifications

Size Range:**2 to 5 Tons, Nominal Cooling**
40,000 to 127,000 Btuh,
Nominal Heating Input

General

SYSTEM DESCRIPTION

Outdoor rooftop mounted, gas heating/electric cooling unit utilizing a hermetic scroll compressor for cooling duty. Unit shall discharge supply air vertically or horizontally as shown on contract drawings. Condenser fan/coil section shall have a draw-thru design with vertical discharge for minimum sound levels.

QUALITY ASSURANCE

- Unit shall be rated in accordance with AHRI Standards 210/240 and 270-1995.
- Unit shall be designed in accordance with UL Standard 1995 and ANSI Z 21.47.
- Unit shall be manufactured in a facility registered to ISO 9001 manufacturing quality standard.
- Unit shall be UL listed and c-UL certified as a total package for safety requirements.
- Roof curb shall be designed to conform to NRCA Standards.
- Insulation and adhesives shall meet NFPA 90.1 requirements for flame spread and smoke generation.
- Cabinet insulation shall meet ASHRAE Standard 62.2.

DELIVERY, STORAGE AND HANDLING

- Unit shall be stored and handled per manufacturer's recommendations.

Products

EQUIPMENT

General:

Factory-assembled, single-piece, heating and cooling unit. Contained within the enclosure shall be all factory wiring, piping, controls, refrigerant charge with R-410A refrigerant, and special features required prior to field start-up.

Unit Cabinet:

- Unit cabinet shall be constructed of phosphated, zinc-coated, pre-painted steel capable of with-standing 500 hours in salt spray.
- Normal service shall be through 3 removable cabinet panels.
- The unit shall be constructed on a rust proof unit base that has an externally trapped, integrated sloped drain.
- Evaporator fan compartment top surface shall be insulated with a minimum 1/2-in. (12.7 mm) thick, flexible fiberglass insulation, coated on the air side and retained by adhesive and mechanical means. The evaporator wall sections will be insulated with a minimum semi-rigid foil-faced board capable of being wiped clean. Aluminum foil-faced fiberglass insulation shall be used in the entire indoor air cavity section.
- Unit shall have a field-supplied condensate trap.

Fans:

- The evaporator fan shall be a multi-speed, direct-drive, as shown on equipment drawings.
- Fan wheel shall be made from steel, be double-inlet type with forward curved blades with corrosion resistant finish. Fan wheel shall be dynamically balanced.
- Condenser fan shall be direct drive propeller type with aluminum blades riveted to corrosion resistant steel spiders, be dynamically balanced, and discharge air vertically.

Compressor:

- Fully hermetic compressors with factory-installed vibration isolation.

Coils:

Evaporator and condenser coils shall have aluminum plate fins mechanically bonded to seamless copper tubes with all joints brazed. Tube sheet openings shall be belled to prevent tube wear.

Heating Section:

- Induced-draft combustion type with energy saving direct spark ignition system and redundant main gas valve.
- Induced-draft motors shall provide adequate airflow for combustion.
- The heat exchangers shall be constructed of aluminized steel for corrosion resistance.
- Burners shall be of the in-shot type constructed of aluminum coated steel.
- All gas piping and electric power shall enter the unit cabinet at a single location.

Refrigerant Components:

Refrigerant expansion device shall be of the TXV (thermostatic expansion valve) or fixed orifice type.

Filters:

Filter section shall consist of field-installed, throwaway, 1-in. (25 mm) thick fiberglass filters of commercially available sizes.

Controls and Safeties:

- Unit controls shall be complete with a self-contained low voltage control circuit.
- Compressors shall incorporate a solid-state compressor protector that provides reset capability.

Operating Characteristics:

- Unit shall be capable of starting and running at 125°F (51°C) ambient outdoor temperature per maximum load criteria of AHRI Standard 210.
- Compressor with standard controls shall be capable of operation down to 40°F (4°C) ambient outdoor temperature.
- Units shall be provided with fan time delay to prevent cold air delivery before the heat exchanger warms up.
- Unit shall be provided with 60-second fan time delay (single phase models) or 90 second fan time delay (three phase models) after the thermostat is satisfied.

Electrical Requirements:

All unit power wiring shall enter the unit cabinet at a single location.

Motors:

- Compressor motors shall be of the refrigerant-cooled type with line-break thermal and current overload protection.
- All fan motors shall have permanently lubricated bearings, and inherent, automatic reset, thermal overload protection.
- Condenser fan motor shall be totally enclosed.
- Evaporator Fan Motor to be ECM Motor.

Compressor Protection:

Solid-state control shall protect compressor by preventing "short cycling."

Manufacturer reserves the right to change, at any time, specifications and designs without notice and without obligations.

Guide Specifications (Continued)

Low NOx:

Shall provide NOx reduction to meet 40 ng/J NOx emissions requirements as shipped from the factory.

Special Features Available:

1. Coil Options
   Base unit with tin plated indoor coil hairpins available as a factory installed option.
2. Compressor Start Kit (single phase units only):
   Shall provide additional starting torque for single-phase compressors.
3. Thermostat:
   To provide for one-stage heating and cooling in addition manual or automatic changeover and indoor fan control.
4. Crankcase Heater:
   Shall provide anti-floodback protection for low-load cooling applications.
5. Economizer:
   (Horizontal - Field installed accessory)
   (Vertical - Field installed accessory)
   a. Economizer controls capable of providing free cooling using outside air.
   b. Equipped with low leakage dampers not to exceed 3% leakage, at 1.0 IN. W.C. pressure differential.
   c. Spring return motor shuts off outdoor damper on power failure.
6. Filter Rack Kit:
   Shall provide filter mounting for downflow applications. Offered as a field installed accessory.
7. Flat Roof Curb:
   Curbs shall have seal strip and a wood nailer for flashing and shall be installed per manufacturer's instructions.
8. Flue Discharge Deflector
   Directs flue gas exhaust; 90 degrees upward from current discharge.
9. Heat Exchanger
   Stainless Steel Heat Exchanger available as a factory installed option.
10. High Altitude Propane Conversion Kit:
    Shall consist of all required hardware to convert to propane gas heat operation at 2001 to 6000 ft (611 to 1829 m) above sea level.
11. Low Ambient Package:
    Shall consist of a solid-state control and condenser coil temperature sensor for controlling condenser-fan motor operation, which shall allow unit to operate down to 0°F (-18°C) outdoor ambient temperature when properly installed.
12. Manual Outdoor Air Damper:
    Package shall consist of damper, birdscreen, and rainhood which can be preset to admit outdoor air for year-round ventilation.
13. Natural-to-Propane Conversion Kit:
    Shall be complete with all required hardware to convert to propane gas operation at 10.0 IN. W.C. manifold pressure.
14. Propane-to-Natural Conversion Kit
    Shall be complete with all hardware to convert to natural gas at standard altitude (0 to 2000 ft [0 to 610 m] above sea level).
15. Square-To-Round Duct Transitions (24-48 models):
    Shall have the ability to convert the supply and return openings from rectangular to round.
16. Time Guard II
    Automatically prevents the compressor from restarting for at least 4 minutes and 45 seconds after shutdown of the compressor. Not required when a corporate programmable thermostat is applied or with a RTU-MP control. Offered as a field installed accessory.
17. Cabinet air leakage of 2.0% or less at .5 in. W.C. when tested in accordance with ASHRAE standard 193. Available as a factory installed option.
18. Louver Metal Outdoor Coil Grille
    Shall provide hail and vandalism protection. Available as a field installed accessory.
19. Low Pressure Switch Kit
    Kit is designed for use when a low pressure control in desired. This kit provides added reliability for the compressor.

©2020 Payne Heating & Cooling Systems
7310 W. Morris Street • Indianapolis, IN 46231
Edition Date: 01/20

Catalog No: SS-PY4G-11
Replaces: SS-PY4G-10

Manufacturer reserves the right to change, at any time, specifications and designs without notice and without obligations.