38GVM / 40GVM
Multi−Split High−Wall Ductless Split System
38GVM − Size 18k, 24k, 30k, 36k and 42k
40GVM − Size 9k, 12k, and 18k

Carrier
turn to the experts

Service Manual

This Service Manual provides the necessary information to service, repair, and maintain the 38/40GVM.

TABLE OF CONTENTS

	PAGE
SAFETY CONSIDERATIONS	1
MODEL / SERIAL NUMBER NOMENCLATURE	2
STANDARD FEATURES AND ACCESSORIES	3
PHYSICAL DATA	4
AHRI CAPACITY RATINGS	6
AIRTHROW DATA	6
SOUND RATINGS	6
DIMENSIONS - INDOOR	7
DIMENSIONS - OUTDOOR	8
CLEARANCES	9
SYSTEM OPERATING ENVELOPE	11
ELECTRICAL DATA	12
CONNECTION DIAGRAM	13
WIRING DIAGRAMS	14
REFRIGERATION SYSTEM DIAGRAMS	19
SYSTEM EVACUATION AND CHARGING	21
REMOTE CONTROL AND FUNCTIONS	22
TROUBLESHOOTING	28
APPENDIX TABLES	44
UNIT REMOVAL PROCEDURES	47

⚠ WARNING

EXPLOSION HAZARD

Failure to follow this warning could result in death, serious personal injury, and/or property damage.

Never use air or gases containing oxygen for leak testing or operating refrigerant compressors. Pressurized mixtures of air or gases containing oxygen can lead to an explosion.

SAFETY CONSIDERATIONS

Improper installation, adjustment, alteration, service, maintenance, or use can cause explosion, fire, electrical shock, or other conditions which may cause death, personal injury, or property damage. Consult a qualified installer, service agency, or your distributor or branch for information or assistance. The qualified installer or agency must use factory-authorized kits or accessories when modifying this product. Refer to the individual instructions packaged with the kits or accessories when installing.

Follow all safety codes. Wear safety glasses, protective clothing, and work gloves. Use quenching cloth for brazing operations. Have fire extinguisher available. Read these instructions thoroughly and follow all warnings or cautions included in literature and attached to the unit. Consult local building codes and National Electrical Code (NEC) for special requirements.

Recognize safety information. This is the safety-alert symbol ⚠ When you see this symbol on the unit and in instructions or manuals, be alert to the potential for personal injury.

Understand these signal words: DANGER, WARNING, and CAUTION. These words are used with the safety-alert symbol. DANGER identifies the most serious hazards which **will** result in severe personal injury or death. WARNING signifies hazards which **could** result in personal injury or death. CAUTION is used to identify unsafe practices which **may** result in minor personal injury or product and property damage. NOTE is used to highlight suggestions which **will** result in enhanced installation, reliability, or operation.

⚠ WARNING

ELECTRICAL SHOCK HAZARD

Failure to follow this warning could result in personal injury or death.

Before installing, modifying, or servicing system, main electrical disconnect switch must be in the OFF position. There may be more than one disconnect switch. Lock out and tag switch with a suitable warning label.

⚠ CAUTION

EQUIPMENT DAMAGE HAZARD

Failure to follow this caution may result in equipment damage or improper operation.

Do not bury more than 36 in. (914 mm) of refrigerant pipe in the ground. If any section of pipe is buried, there must be a 6 in. (152 mm) vertical rise to the valve connections on the outdoor units. If more than the recommended length is buried, refrigerant may migrate to the cooler buried section during extended periods of system shutdown. This causes refrigerant slugging and could possibly damage the compressor at start-up.

MODEL NUMBER NOMENCLATURE

INDOOR UNIT

40 — Fan Coil Unit

GVM — **Unit Type**
GVM – Multi High Wall

009 — **Nominal Capacity**
009 – 3/4 Ton
012 – 1 Ton
018 – 1–1/2 Ton

– – –

3 — **Voltage**
3 – 208/230–1–60

OUTDOOR UNIT

38 — Outdoor Unit

GVM — **Unit Type**
GVM – Heat Pump

2 — **Number of Ports**
2 – Ports
3 – Ports
4 – Ports
5 – Ports

18 — **Nominal Capacity**
18 – 1–1/2 Tons
24 – 2 Tons
30 – 2–1/2 Tons
36 – 3 Tons
42 – 3–1/2 Tons

– – –

3 — **Voltage**
3 – 208/230–1–60

Use of the AHRI Certified TM Mark indicates a manufacturer's participation in the program For verification of certification for individual products, go to www.ahridirectory.org.

SERIAL NUMBER NOMENCLATURE

Position Number	1	2	3	4	5	6	7	8	9	10
Serial Number	5	2	1	3	V	1	2	3	4	5
Week										
Year										
Factory Code										
Sequential digits unique for each factory										

STANDARD FEATURES AND ACCESSORIES

Ease of Installation	
Mounting Bracket	S
Low Voltage Controls	S
Comfort Features	
Microprocessor Control	S
Wireless Remote Control	S
Rapid Cooling and Heating	S
Automatic Air Sweep	S
Cold Blow Prevention	S
Continuous Fan	S
Auto Restart Function	S
Auto Changeover	S
Energy Saving Features	
Inverter Driven Compressor	S
Sleep Mode	S
24 Hour Stop/Start Timer	S
Safety And Reliability	
Indoor Unit Freeze Protection	S
3 Minute Compressor Time Delay	S
High Compressor Discharge Temperature	S
Low Voltage Protection	S
Compressor Overload Protection	S
Compressor Over Current Protection	S
IPM Module Protection	S
Ease of Service	
Cleanable Filters	S
Diagnostic LED's On Outdoor Board	S
Error Messages Displayed On Front Panel	S
Application Flexibility	
Condensate Pumps	A
Standard Warranty*	
7 Years Compressor limited Warranty	S
5 year Parts Limited Warranty	S

Legend
S Standard
A Accessory
***** For Residential applications. For Commercial applications, warranty is 1 year for parts and 5 years for compressor.

INDOOR UNITS

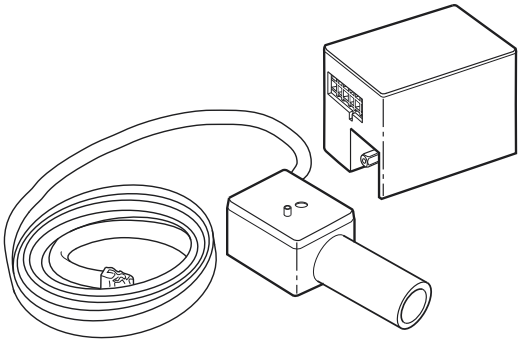

Fig. 1 – Condensate Pump Accessory

On high wall fan coils, the condensate pump accessory is recommended when adequate drain line pitch cannot be provided, or when the condensate must move up to exit.

The pump has a lift capability of 12 ft (3.6 m) on the discharge side if the pump is mounted in the fan coil or 6 ft (1.8 m) on the suction side if the pump is remote mounted.

Table 1—Accessory Condensate Pump Kit Contents

Item	Qty.
16 ft Transparent Suction/Discharge Tubing	1
Condensate Pump Assembly	1
Low voltage Power Cord	1
Transparent Detection Unit Vent Tubing	1
Power Cable	1
Wire Ties	6
Wall Mount Bracket	1
Adhesive	1
Detection Unit Mounting Bracket	1
⅝–in Rubber Elbow	1
Detection Unit	1

⚠ WARNING

ELECTRICAL SHOCK HAZARD

Failure to follow this warning could result in personal injury or death.

Before installing, modifying, or servicing system, main electrical disconnect switch must be in the OFF position. There may be more than one disconnect switch. Lock out and tag switch with a suitable warning label.

PHYSICAL DATA - 38GVM

Outdoor Unit 38GVM	218	324	430	436	542
System Voltage	208/230–1–60				
Control Voltage	Low Voltage Pulse DC				
Rated Cooling Capacity (Btuh)	18,000	26,000	29,000	34,400	40,000
Cooling Cap. Range Min – Max Btuh	7,000 – 21,000	7,500 – 33,000	7,500 – 33,000	8,530 – 34,000	8,500 – 46,400
Rated Heating Capacity (Btuh)	19,000	29,000	30,400	37,200	43,000
Heating Cap. Range Min – Max Btuh	2,500 – 22,600	7,500 – 35,000	7,500 – 35,000	10,600 – 40,900	10,600 – 47,760
Operating Weight lb (kg)	95 (43)	135 (61.2)	137 (62.1)	161 (73)	225 (102.3)
Refrigerant Type	R–410A				
Metering Device (At Outdoor Unit)	EXV				
Charge lb (kg)	3.0 (1.4)	4.9 (2.2)	4.9 (2.2)	6.4 (2.9)	10.6 (4.8)
Compressor					
Type	Inverter Driven Rotary				
Model	SNB130FGYMC	TNB220FLHMC			TNB306FPGMC
Outdoor Fan					
CFM hi/med/lo	1530 / 1354 / 942	1942 / 1707 / 1413		2177 (high)	3237 (high)
RPM hi/med/lo	830 / 670 / 500	690 / 600 / 500		820 / 640 / 560	860 / 650 / 550
Diameter (in)	17.5	20.5		21.7	22.4
Watts watts	60			120	140
Outdoor Coil					
Face Area (sq. ft)	4.6	6.3		7.3	11.6
No. Rows	2				
Fins per inch	18				
Refrigerant Lines					
Connection Type	Flare				
Liquid (Mix Phase) in OD (QTY)	1/4” (2)	1/4” (3)	1/4” (4)	1/4” (3), 3/8” (1)	1/4” (4), 3/8” (1)
Vapor Line in OD (QTY)	3/8” (2)	3/8” (3)	3/8” (4)	3/8” (2), 1/2” (1), 5/8”(1)	3/8” (2), 1/2” (2), 5/8”(1)
Total Piping ft. (m.)*	66 (20)	230 (70)			262 (80)
Max Piping to Any FCU ft. (m.)	33 (10)	66 (20)			82 (25)
Max Elevation (Between Indoors)	16.4 (5)	33 (10)		25 (7.5)	
Max Lift (Fan Coil Above) ft	16.4 (5)	33 (10)		50 (15)	
Max Drop (Fan Coil Below) ft	16.4 (5)	33 (10)		50 (15)	
External Finish	White				

*Refer to Long Line Application section

PHYSICAL DATA - 40GVM

Indoor Unit 40GVM	009	012	018
System Voltage	208/230–1–60		
Control Voltage	Low Voltage Pulse DC		
Electrical Connections	Indoor Unit Powered From Outdoor Unit		
Nominal Cooling Capacity (Btuh)	9,000	12,000	18,000
Nominal Heating Capacity (Btuh)	9,800	13,000	19,800
Operating Weight lb (kg)	22.0 (10)		29.0 (13)
Refrigerant Type	R–410A		
Metering Device (At Outdoor Unit)	EXV		
Moisture Removal Rate (pints/hr)	1.7	2.9	3.8
Indoor Fan			
RPM/CFM (Super High) – Cooling	1260 / 330	1280 / 341	1350 / 500
RPM/CFM (High) – Cooling	1100 / 294	1100 / 277	1200 / 459
RPM/CFM (Medium) – Cooling	950 / 253	950 / 253	1050 / 383
RPM/CFM (Low) – Cooling	750 / 218	750 / 217	900 / 324
RPM/CFM (Super High) – Heating	1320 / 330	1300 / 341	1420 / 500
RPM/CFM (High) – Heating	1200 / 294	1170 / 277	1250 / 459
RPM/CFM (Medium) – Heating	1100 / 253	1050 / 253	1150 / 383
RPM/CFM (Low) – Heating	750 / 218	950 / 217	1050 / 324
Motor Watts	20		
Blower Quantity … Size in	1 … 3.6 x 25.4		1 … 3.9 x 27.9
Indoor Coil			
Face Area (sq. ft)	1.85		2.3
No. Of Rows	2		
Fins Per Inch	18	18	16
Filters			
Quantity	2		
Controls	Integrated Microprocessor		
Wireless Remote	Standard		
Modes	Cool/Heat/Dry/Auto		
Fan Mode	High/Medium/Low/Auto		
Emergency Mode	Yes		
Defrost Method	Demand Defrost		
Diagnostics	Yes		
Air Sweep	Yes		
Soft Start	Yes		
Rapid Cooling/Heating	Yes		
Cold Blow Prevention	Yes		
Sleep Mode	Yes		
24 Hour Timer	Yes		
Auto Restart	Yes		
Freeze Protection On Indoor Unit	Yes		
Refrigerant Lines			
Connection Type	Flare		
Liquid (Mix Phase) in OD	1/4”		
Vapor Line in OD	3/8”	1/2”	
Condensate Drain			
Size in	ID = 1/2” OD = 5/8”		
External Finish	White		

AHRI* CAPACITY RATINGS

Model Numbers		Cooling			High Heating 47° F (8.33° C)		Low Heating 17° F (−8.33° C)
Outdoor Unit	Indoor Unit	Capacity (Btuh)	EER	SEER	Capacity (Btuh)	HSPF	Capacity (Btuh)
38GVM218−−−3	2 x 40GVM009−−−3	18,000	10.2	16.0	19,000	8.2	9,600
	40GVM009−−−3 + 40GVM012−−−3	18,000	10.2	16.0	19,000	8.2	9,600
38GVM224−−−3	2 x 40GVM009−−−3 + 40GVM012−−−3	26,000	8.2	16.0	29,000	8.2	17,000
	3 x 40GVM009−−−3	26,000	8.2	16.0	29,000	8.2	17,000
	40GVM009−−−3 + 2 x 40GVM012−−−3	26,000	8.2	16.0	29,000	8.2	17,000
38GVM430−−−3	4 x 40GVM009−−−3	29,000	7.3	16.0	30,400	8.2	16,500
	40GVM009−−−3 + 2 x 40GVM012−−−3 + 40GVM018−−−3	29,000	7.3	16.0	30,400	8.2	16,500
38GVM436−−−3	Non−Ducted FCU's	34,400	8.0	16.0	37,200	8.2	22,000
38GVM542−−−3	Non−Ducted FCU's	40,000	9.3	16.0	43,000	8.0	24,800

*Air Conditioning, Heating & Refrigeration Institute
−− = N/A

Legend
EER – Energy Efficiency Ratio
HSPF – Heating Seasonal Performance Factor
SEER – Seasonal Energy Efficiency Ratio

NOTES:
1. Ratings are net values reflecting the effects of circulating fan heat. Ratings are based on: Cooling Standard: 80°F (26.67°C) db, 67°F (19.44°C) wb air entering indoor unit and 95°F (35°C) db air entering outdoor unit. High Temperature Heating Standard: 70°F (21.11°C) db air entering indoor unit and 47°F (8.33°C) db, 43°F (6.11°C) wb air entering outdoor unit.
2. Ratings are based on 25 ft. (7.62 m) of interconnecting refrigerant lines.
3. All system ratings are based on fan coil units operating at high fan speed. Consult Physical Data tables for air flows at all available fan speeds.

AIR THROW DATA

Model Number	Approximate Air Throw ft. (m)			
	Low	Medium	High	Turbo
40GVM009−−−3	18 (5.5)	21 (6.4)	24 (7.3)	27 (8.2)
40GVM012−−−3	19 (5.8)	21 (6.4)	24 (7.3)	27 (8.2)
40GVM018−−−3	25 (7.6)	29 (8.8)	32 (9.8)	35 (10.7)

SOUND RATINGS

Outdoor Units

Model Number	Sound Power dBA	Sound Pressure dBA
38GVM218−−−3 (cool/heat)	66/66	56/56
38GVM324−−−3 (cool/heat)	66/66	56/56
38GVM430−−−3 (cool/heat)	66/66	56/56
38GVM436−−−3 (cool/heat)	69/69	59/59
38GVM542−−−3 (cool/heat)	68/68	58/58

Indoor Units

Model Number	Low		Medium		High		Turbo	
	Sound Power dBA	Sound Pressure dBA	Sound Power dBA	Sound Pressure dBA	Sound Power dBA	Sound Pressure dBA	Sound Power dBA	Sound Pressure dBA
40GVM009−−−3	36.0	26.0	45.0	35.0	47.0	37.0	51.0	41.0
40GVM012−−−3	38.0	28.0	46.0	36.0	48.0	38.0	52.0	42.0
40GVM018−−−3	45.0	35.0	50.0	40.0	54.0	44.0	56.0	46.0

NOTES:
1. Sound power ratings are per AHRI 270 and AHRI 350
2. Sound pressure ratings are estimated sound pressure, 3 feet (.91 m) from the unit, based on sound power data.

DIMENSIONS - INDOOR

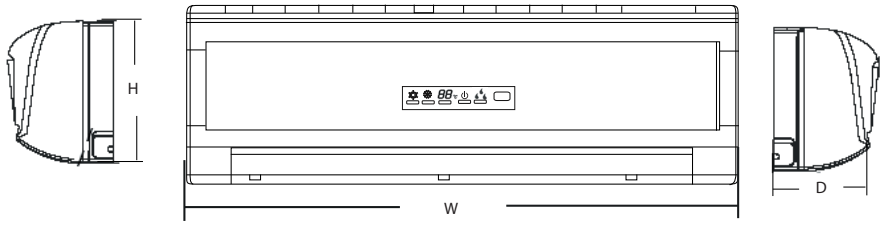

A08289

Unit Size	W In. (mm)	H In. (mm)	D In. (mm)	Net Operating Weight Lbs. (Kg)
9k	33.3 (846)	10.7 (272)	7.1 (180)	22.0 (10)
12k	33.3 (846)	10.7 (272)	7.1 (180)	22.0 (10)
18k	37.0 (940)	11.7 (297)	7.9 (201)	29.0 (13)

Fig. 2 – Indoor Unit Dimensions

DIMENSIONS - OUTDOOR

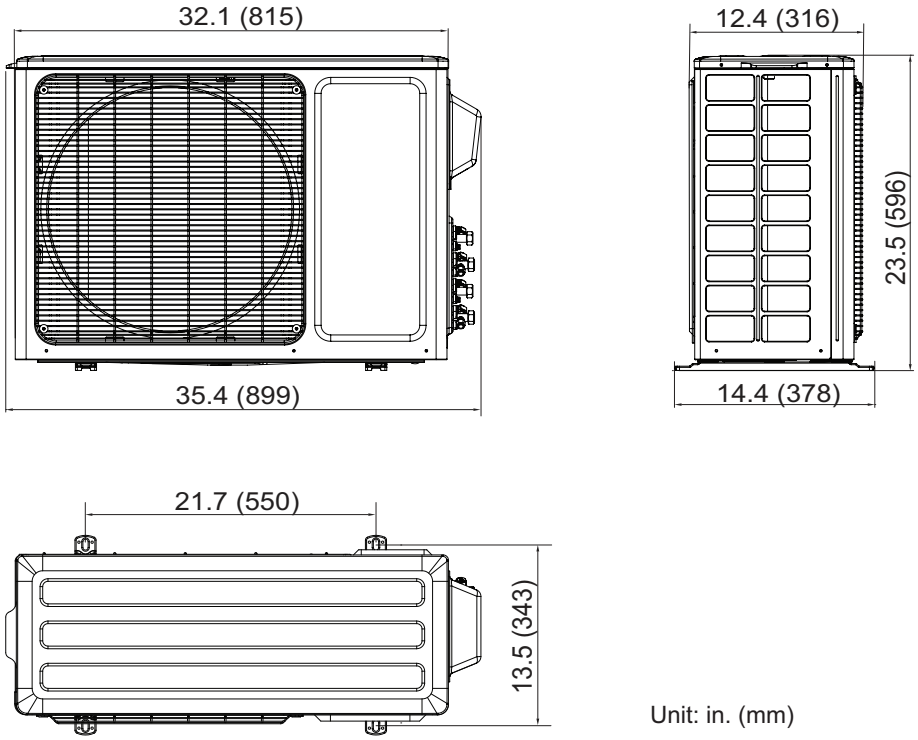

A12552

Fig. 3 – 38GVM018
Weight, lb (kg): Gross - 106 (48) / Net - 95 (43)

DIMENSIONS - OUTDOOR

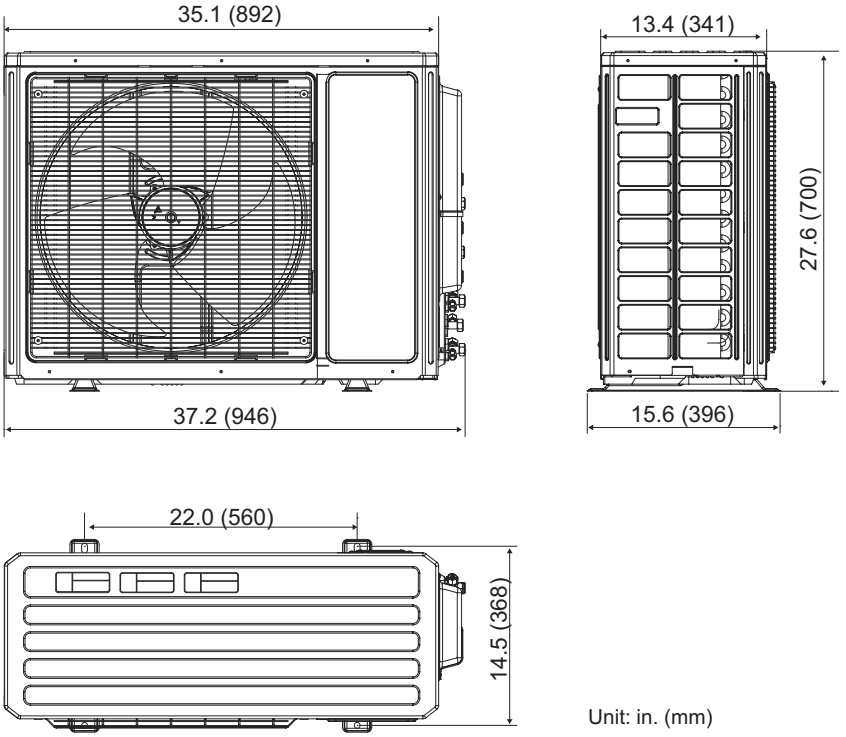

Fig. 4 – 38GVM024/030
024 Weight, lb (kg): Gross - 146 (66.2) / Net - 135 (61.2)
030 Weight, lb (kg): Gross - 148 (67.1) / Net - 137 (62.1)

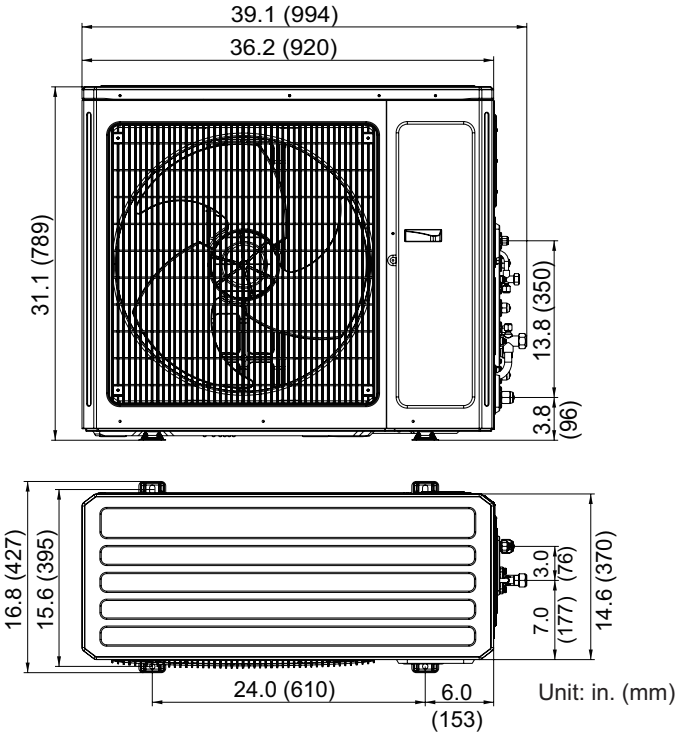

Fig. 5 – 38GVM036
Weight, lb (kg): Gross - 172 (78) / Net - 161 (73)

DIMENSIONS - OUTDOOR CONTINUED

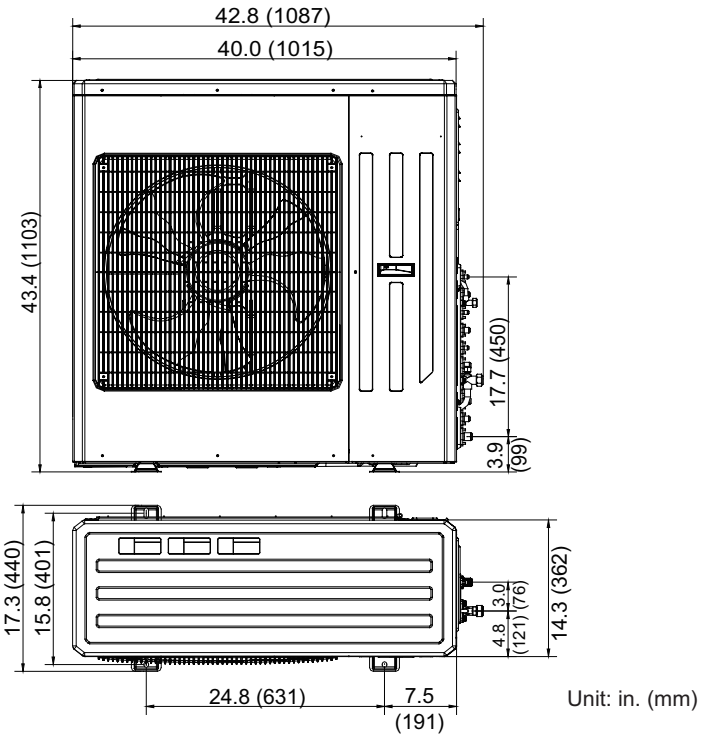

A12555

Fig. 6 – 38GVM042
Weight, lb (kg): Gross - 247 (112.3) / Net - 225 (102.3)

CLEARANCES - INDOOR

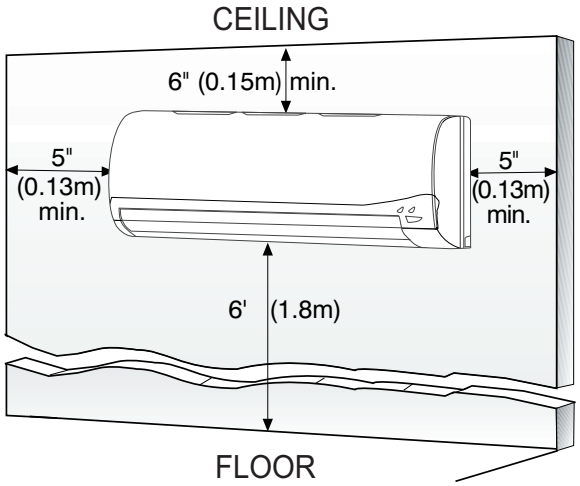

A07891

Fig. 7 – Indoor unit clearance

CLEARANCES - OUTDOOR

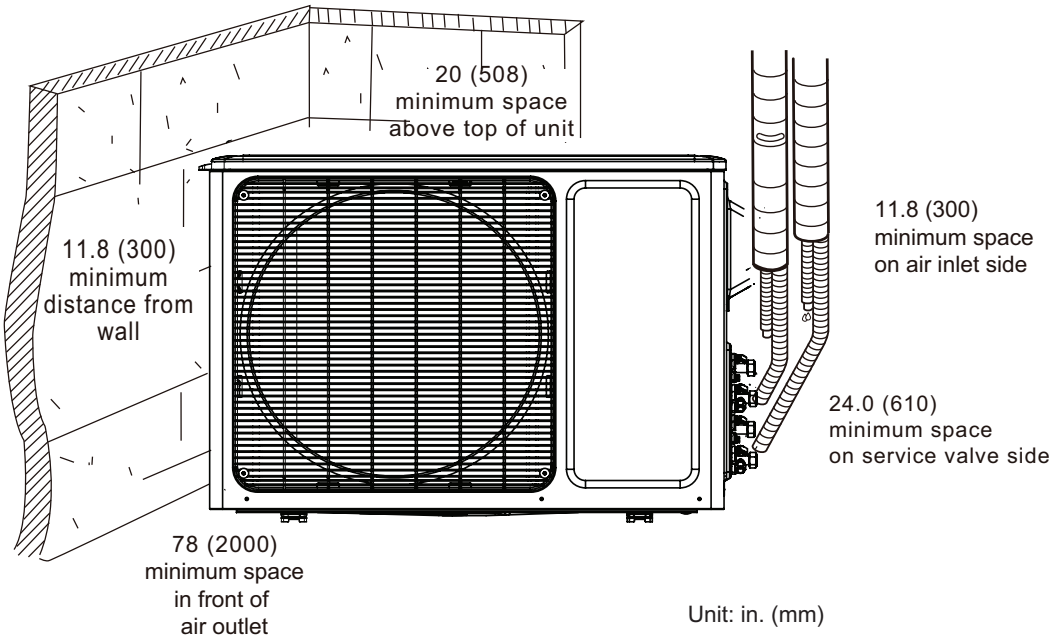

A112556

Fig. 8 – 38GVM018, 024, 030

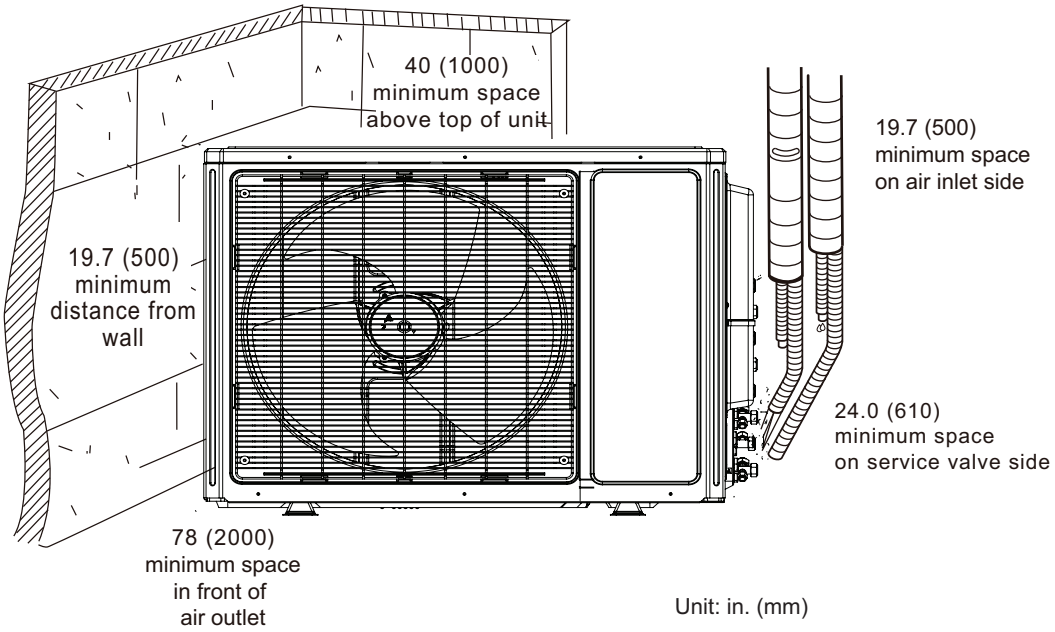

A112557

Fig. 9 – 38GVM036, 042

SYSTEM OPERATING ENVELOPE

Model Size	9K	12K	18K	18K	24K	30K	36K	42K
Indoor/Outdoor	Indoor			Outdoor				
Indoor Operating Range (A/C and HP) ° F (° C)	61 to 86 (16 to 30)			–				
Cooling Ambient Operating Range ° F (° C)	–			23 to 118 (–5 to 48)				
Heating Ambient Operating Range ° F (° C)	–			5 to 81 (–15 to 27)				

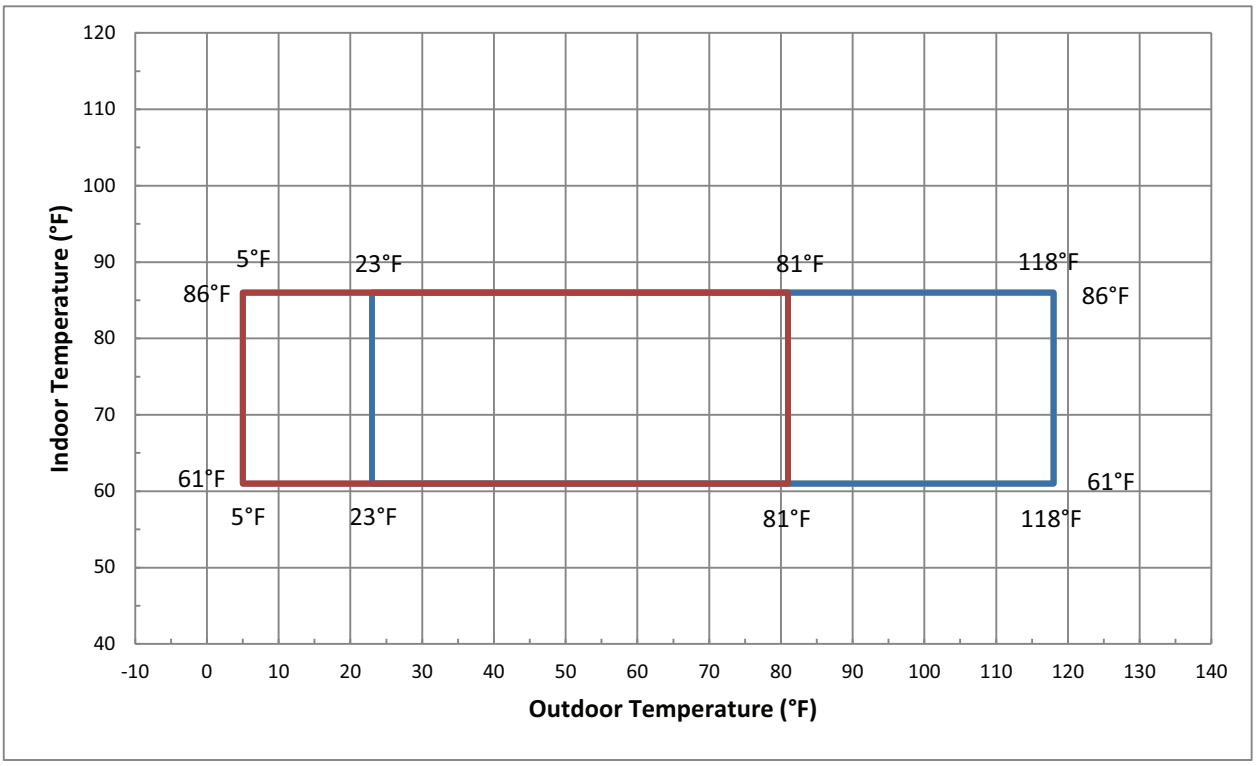

Fig. 10 – 18k - 42k 230V System Operating Envelope

ELECTRICAL DATA

Outdoor Units

Unit Size	System Voltage	Operating Voltage*	Compressor		Outdoor Fan			MCA	MAX FUSE/CB Amp (MOCP)
	VOLT–PH–HZ	MAX/MIN	RLA	LRA	FLA	HP	W		
18 K	208/230–1–60	253/187	9.6	27	0.54	1/12	60	13	20
24 K			14.7	45	0.59			20	30
30 K			19.6	45				26	45
36 K			21.0	45	0.67	1/8	120	28	45
42 K			21.5	67	1.10	1/6	140	29	50

Indoor Units

Unit Size	System Voltage	Operating Voltage	Indoor Fan†	
	VOLT–PH–HZ	MAX/MIN	FLA	W
9 K	208/230–1–60	253/187	0.20	20
12 K				
18 K			0.32	

* Permissible limits of the voltage range at which the unit will operate satisfactorily
† Indoor fan powered from outdoor unit.

LEGEND
FLA – Full Load Amps
LRA – Locked Rotor Amps
MCA – Minimum Circuit Amps
RLA – Rated Load Amps
MOCP– Maximum Over Current Protection

WIRING

Power Wiring:

The main power is supplied to the outdoor unit. The field supplied connecting cable from the outdoor unit to indoor unit consists of three (3) wires and provides the power for the indoor unit. Two wires are high voltage AC power and one is a ground wire.

Consult your local building codes and the NEC (National Electrical Code) or CEC (Canadian Electrical Code) for special requirements.

All wires must be sized per NEC or CEC and local codes. Use Electrical Data table MCA (minimum circuit amps) and MOCP (maximum over current protection) to correctly size the wires and the disconnect fuse or breakers respectively.

Per caution note, only copper conductors with a minimum 300 volt rating and 2/64-inch thick insulation must be used.

Control Wiring:

A separate shielded copper conductor only, with a minimum 300 volt rating and 2/64-inch thick insulation, must be used as the communication wire from from the outdoor unit to the indoor unit.

To minimize voltage drop of the control wire, use the following wire size and maximum lengths shown in the chart below.

Wire Size	Length ft (m)
18 AWG	50 ft. (15 m)
16 AWG	50 ft (15) to 100 ft. (30 m)

⚠ CAUTION

EQUIPMENT DAMAGE HAZARD

Failure to follow this caution may result in equipment damage or improper operation.

- Wires should be sized based on NEC and local codes.
- Use copper conductors only with a minimum 300 volt . rating and 2/64 inch thick insulation.

⚠ CAUTION

EQUIPMENT DAMAGE HAZARD

Failure to follow this caution may result in equipment damage or improper operation.

- Be sure to comply with local codes while running wire from indoor unit to outdoor unit.
- Every wire must be connected firmly. Loose wiring may cause terminal to overheat or result in unit malfunction. A fire hazard may also exist. Therefore, be sure all wiring is tightly connected.
- No wire should be allowed to touch refrigerant tubing, compressor or any moving parts.
- Disconnecting means must be provided and shall be located within sight and readily accessible from the air conditioner.
- Connecting cable with conduit shall be routed through hole in the conduit panel.

CONNECTION DIAGRAM

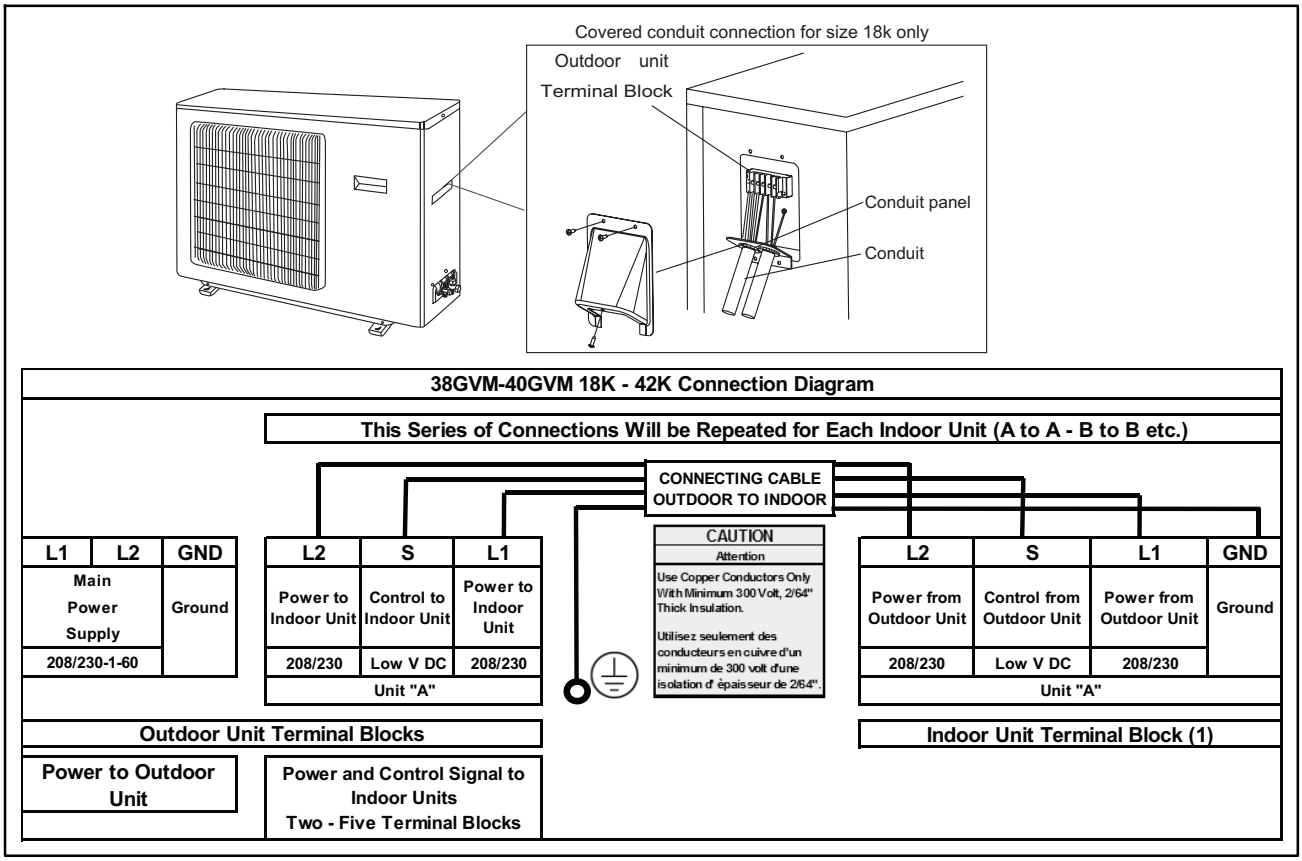

A12558

Fig. 11 – Field Wiring

WIRING DIAGRAMS

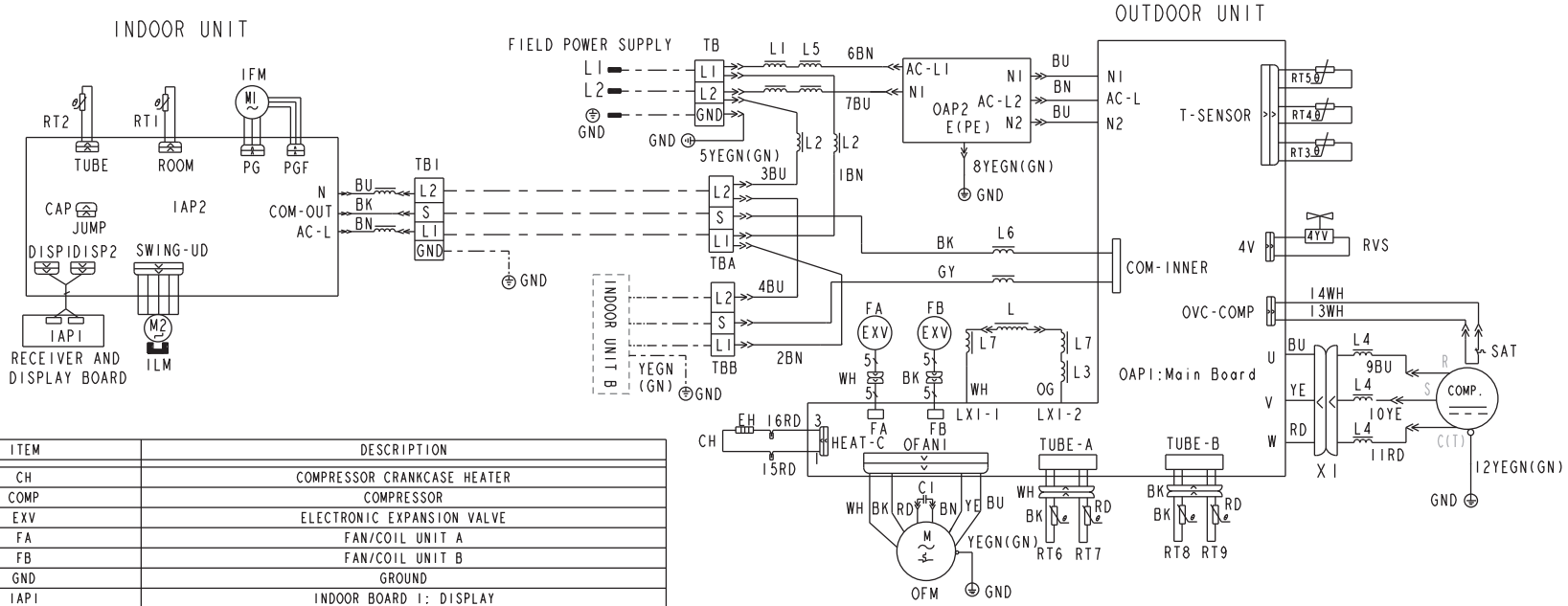

ITEM	DESCRIPTION
CH	COMPRESSOR CRANKCASE HEATER
COMP	COMPRESSOR
EXV	ELECTRONIC EXPANSION VALVE
FA	FAN/COIL UNIT A
FB	FAN/COIL UNIT B
GND	GROUND
IAP1	INDOOR BOARD 1: DISPLAY
IAP2	INDOOR BOARD 2: MAIN CONTROL BOARD
IFM	INDOOR FAN MOTOR
ILM	INDOOR LOUVER MOTOR
L	REACTOR
OAP1	OUTDOOR BOARD 1: MAIN CONTROLBOARD
OAP2	OUTDOOR BOARD 2
OFM	OUTDOOR FAN MOTOR
RT1	INDOOR ROOM THERMISTOR
RT2	INDOOR COIL THERMISTOR
RT3	OUTDOOR COIL THERMISTOR
RT4	OUTDOOR AIR THERMISTOR
RT5	COMPRESSOR DISCHARGE THERMISTOR
RT6	UNIT A SUCTION THERMISTOR
RT7	UNIT A LIQUID THERMISTOR
RT8	UNIT B SUCTION THERMISTOR
RT9	UNIT B LIQUID THERMISTOR
RVS	REVERSING VALVE SOLENOID
SAT	COMPRESSOR OVERLOAD
TB	FIELD POWER SUPPLY TERMINAL BLOCK
TB1	INDOOR UNIT TERMINAL BLOCK
TBA AND TBB	INDOOR UNIT TERMINAL BLOCKS, FOR INDOOR UNITS A AND B
W	WIRE
———	FACTORY WIRING
- — - — - — -	FIELD WIRING

WIRE COLOUR LEGEND	
ITEM	COLOUR
BK	BLACK
BN	BROWN
BU	BLUE
GY	GRAY
OG	ORANGE
RD	RED
WH	WHITE
YE	YELLOW
YEGN	YELLOW/GREEN

NOTES:
1. WIRE IN ACCORDANCE WITH THE NATIONAL ELECTRICAL CODE (N.E.C) AND LOCAL CODES.
2. IF ANY OF THE ORIGINAL WIRE FURNISHED NEEDS TO BE REPLACED, IT MUST BE REPLACED WITH TYPE 90C WIRE OR ITS EQUIVALENT.
⊗ 3. FOR ALL FIELD WIRES, USE COPPER CONDUCTORS ONLY, WITH A MINIMUM 300 VOLT, 2/64 INCH THICK INSULATION.

A13093

Fig. 12 – 38GVM 18k Wiring Diagram

WIRING DIAGRAMS CONTINUED

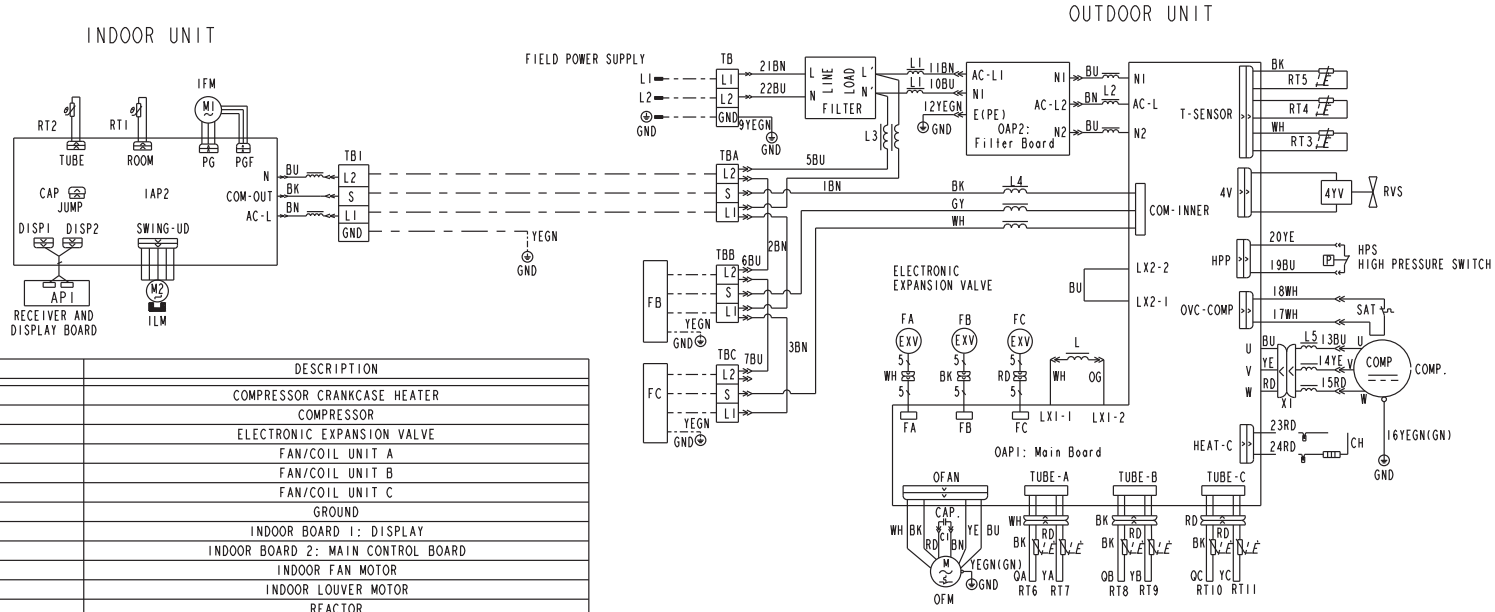

ITEM	DESCRIPTION
CH	COMPRESSOR CRANKCASE HEATER
COMP	COMPRESSOR
EXV	ELECTRONIC EXPANSION VALVE
FA	FAN/COIL UNIT A
FB	FAN/COIL UNIT B
FC	FAN/COIL UNIT C
GND	GROUND
IAP1	INDOOR BOARD 1: DISPLAY
IAP2	INDOOR BOARD 2: MAIN CONTROL BOARD
IFM	INDOOR FAN MOTOR
ILM	INDOOR LOUVER MOTOR
L	REACTOR
OAP1	OUTDOOR BOARD 1: MAIN CONTROLBOARD
OAP2	OUTDOOR BOARD 2
OFM	OUTDOOR FAN MOTOR
RT1	INDOOR ROOM THERMISTOR
RT2	INDOOR COIL THERMISTOR
RT3	OUTDOOR COIL THERMISTOR
RT4	OUTDOOR AIR THERMISTOR
RT5	COMPRESSOR DISCHARGE THERMISTOR
RT6	UNIT A SUCTION THERMISTOR
RT7	UNIT A LIQUID THERMISTOR
RT8	UNIT B SUCTION THERMISTOR
RT9	UNIT B LIQUID THERMISTOR
RT10	UNIT C SUCTION THERMISTOR
RT11	UNIT C LIQUID THERMISTOR
RVS	REVERSING VALVE SOLENOID
SAT	COMPRESSOR OVERLOAD
TB	FIELD POWER SUPPLY TERMINAL BLOCK
TB1	INDOOR UNIT TERMINAL BLOCK
TBA, TBB AND TBC	INDOOR UNIT TERMINAL BLOCKS, FOR INDOOR UNITS A, B AND C
W	WIRE
———	FACTORY WIRING
- — - — - — -	FIELD WIRING

WIRE COLOUR LEGEND	
ITEM	COLOUR
BK	BLACK
BN	BROWN
BU	BLUE
GY	GRAY
OG	ORANGE
RD	RED
WH	WHITE
YE	YELLOW
YEGN	YELLOW/GREEN

NOTES:
1. WIRE IN ACCORDANCE WITH THE NATIONAL ELECTRICAL CODE (N.E.C) AND LOCAL CODES.
2. IF ANY OF THE ORIGINAL WIRE FURNISHED NEEDS TO BE REPLACED, IT MUST BE REPLACED WITH TYPE 90C WIRE OR ITS EQUIVALENT.
⊗3. FOR ALL FIELD WIRES, USE COPPER CONDUCTORS ONLY, WITH A MINIMUM 300 VOLT, 2/64 INCH THICK INSULATION.

A13094

Fig. 13 – 38GVM 24k Wiring Diagram

WIRING DIAGRAMS CONTINUED

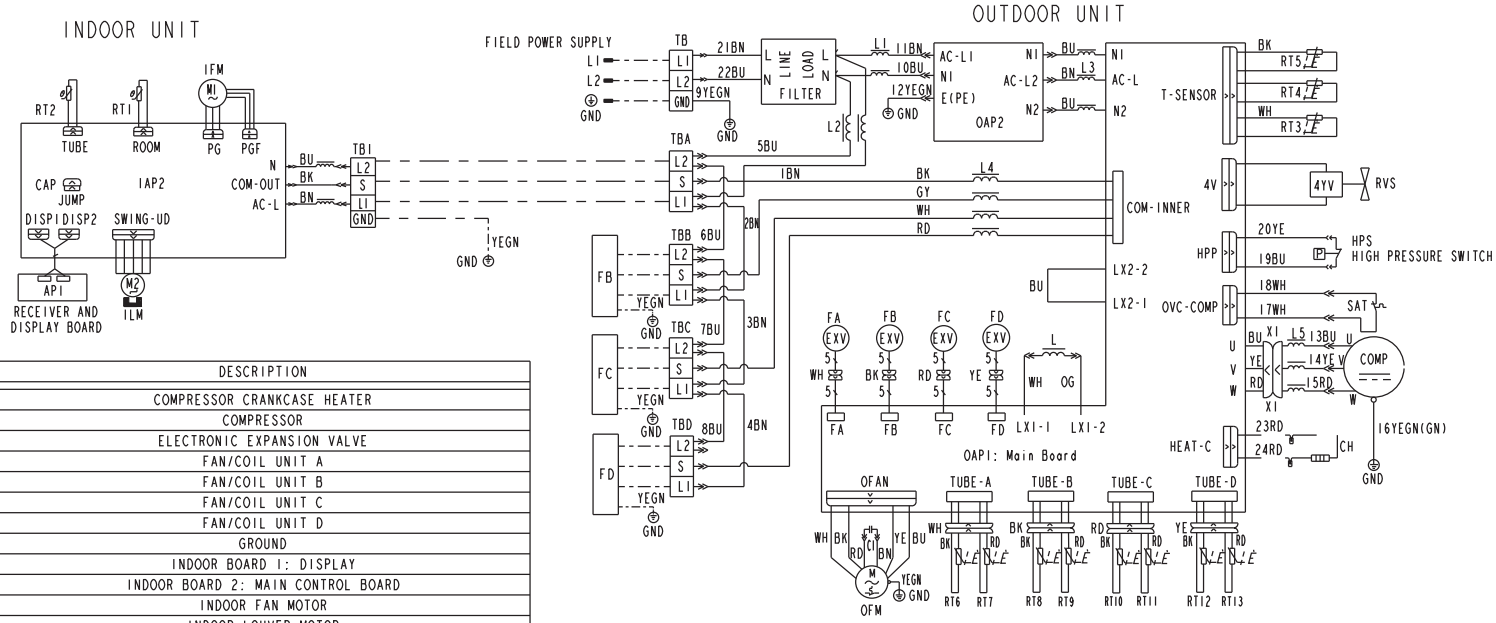

ITEM	DESCRIPTION
CH	COMPRESSOR CRANKCASE HEATER
COMP	COMPRESSOR
EXV	ELECTRONIC EXPANSION VALVE
FA	FAN/COIL UNIT A
FB	FAN/COIL UNIT B
FC	FAN/COIL UNIT C
FD	FAN/COIL UNIT D
GND	GROUND
IAP1	INDOOR BOARD 1: DISPLAY
IAP2	INDOOR BOARD 2: MAIN CONTROL BOARD
IFM	INDOOR FAN MOTOR
ILM	INDOOR LOUVER MOTOR
L	REACTOR
OAP1	OUTDOOR BOARD 1: MAIN CONTROLBOARD
OAP2	OUTDOOR BOARD 2
OFM	OUTDOOR FAN MOTOR
RT1	INDOOR ROOM THERMISTOR
RT2	INDOOR COIL THERMISTOR
RT3	OUTDOOR COIL THERMISTOR
RT4	OUTDOOR AIR THERMISTOR
RT5	COMPRESSOR DISCHARGE THERMISTOR
RT6	UNIT A SUCTION THERMISTOR
RT7	UNIT A LIQUID THERMISTOR
RT8	UNIT B SUCTION THERMISTOR
RT9	UNIT B LIQUID THERMISTOR
RT10	UNIT C SUCTION THERMISTOR
RT11	UNIT C LIQUID THERMISTOR
RT12	UNIT D SUCTION THERMISTOR
RT13	UNIT D LIQUID THERMISTOR
RVS	REVERSING VALVE SOLENOID
SAT	COMPRESSOR OVERLOAD
TB	FIELD POWER SUPPLY TERMINAL BLOCK
TB1	INDOOR UNIT TERMINAL BLOCK
TBA, TBB, TBC AND TBD	INDOOR UNIT TERMINAL BLOCKS, FOR INDOOR UNITS A, B, C AND D
W	WIRE
———	FACTORY WIRING
- — - — - — -	FIELD WIRING

WIRE COLOUR LEGEND	
ITEM	COLOUR
BK	BLACK
BN	BROWN
BU	BLUE
GY	GRAY
OG	ORANGE
RD	RED
WH	WHITE
YE	YELLOW
YEGN	YELLOW/GREEN

NOTES:
1. WIRE IN ACCORDANCE WITH THE NATIONAL ELECTRICAL CODE (N.E.C) AND LOCAL CODES.
2. IF ANY OF THE ORIGINAL WIRE FURNISHED NEEDS TO BE REPLACED, IT MUST BE REPLACED WITH TYPE 90C WIRE OR ITS EQUIVALENT.
⊗3. FOR ALL FIELD WIRES, USE COPPER CONDUCTORS ONLY, WITH A MINIMUM 300 VOLT, 2/64 INCH THICK INSULATION.

A13095

Fig. 14 – 38GVM 30k Wiring Diagram

WIRING DIAGRAMS CONTINUED

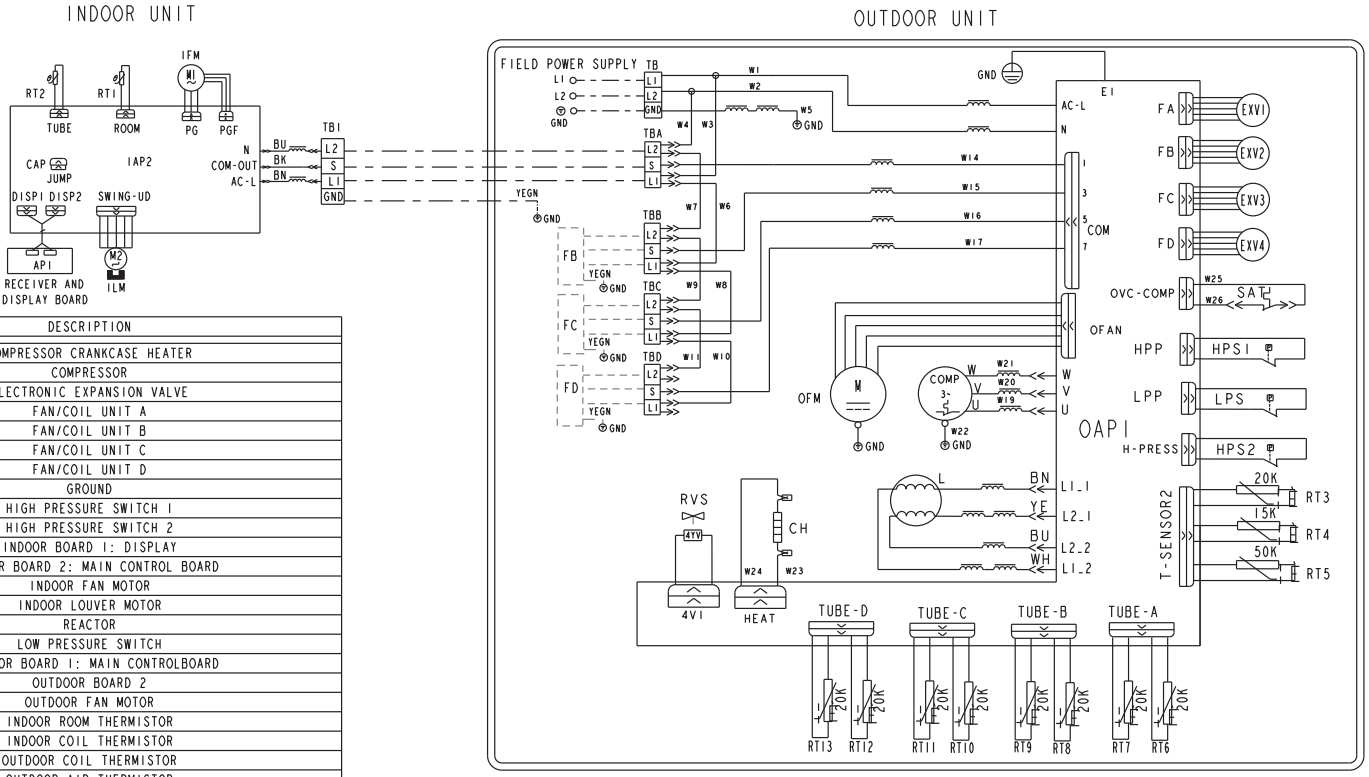

ITEM	DESCRIPTION
CH	COMPRESSOR CRANKCASE HEATER
COMP	COMPRESSOR
EXV	ELECTRONIC EXPANSION VALVE
FA	FAN/COIL UNIT A
FB	FAN/COIL UNIT B
FC	FAN/COIL UNIT C
FD	FAN/COIL UNIT D
GND	GROUND
HPS1	HIGH PRESSURE SWITCH 1
HPS2	HIGH PRESSURE SWITCH 2
IAP1	INDOOR BOARD 1: DISPLAY
IAP2	INDOOR BOARD 2: MAIN CONTROL BOARD
IFM	INDOOR FAN MOTOR
ILM	INDOOR LOUVER MOTOR
L	REACTOR
LPS	LOW PRESSURE SWITCH
OAP1	OUTDOOR BOARD 1: MAIN CONTROLBOARD
OAP2	OUTDOOR BOARD 2
OFM	OUTDOOR FAN MOTOR
RT1	INDOOR ROOM THERMISTOR
RT2	INDOOR COIL THERMISTOR
RT3	OUTDOOR COIL THERMISTOR
RT4	OUTDOOR AIR THERMISTOR
RT5	COMPRESSOR DISCHARGE THERMISTOR
RT6	UNIT A SUCTION THERMISTOR
RT7	UNIT A LIQUID THERMISTOR
RT8	UNIT B SUCTION THERMISTOR
RT9	UNIT B LIQUID THERMISTOR
RT10	UNIT C SUCTION THERMISTOR
RT11	UNIT C LIQUID THERMISTOR
RT12	UNIT D SUCTION THERMISTOR
RT13	UNIT D LIQUID THERMISTOR
RVS	REVERSING VALVE SOLENOID
SAT	COMPRESSOR OVERLOAD
TB	FIELD POWER SUPPLY TERMINAL BLOCK
TB1	INDOOR UNIT TERMINAL BLOCK
TBA, TBB, TBC AND TBD	INDOOR UNIT TERMINAL BLOCKS, FOR INDOOR UNITS A, B, C AND D
W	WIRE
———	FACTORY WIRING
- — - — - — -	FIELD WIRING

WIRE COLOUR LEGEND	
ITEM	COLOUR
BK	BLACK
BN	BROWN
BU	BLUE
GY	GRAY
OG	ORANGE
RD	RED
WH	WHITE
YE	YELLOW
YEGN	YELLOW/GREEN

NOTES:
1. WIRE IN ACCORDANCE WITH THE NATIONAL ELECTRICAL CODE (N.E.C) AND LOCAL CODES.
2. IF ANY OF THE ORIGINAL WIRE FURNISHED NEEDS TO BE REPLACED, IT MUST BE REPLACED WITH TYPE 90C WIRE OR ITS EQUIVALENT.
⊗ 3. FOR ALL FIELD WIRES, USE COPPER CONDUCTORS ONLY, WITH A MINIMUM 300 VOLT, 2/64 INCH THICK INSULATION.

A13096

Fig. 15 – 38GVM 36k Wiring Diagram

WIRING DIAGRAMS CONTINUED

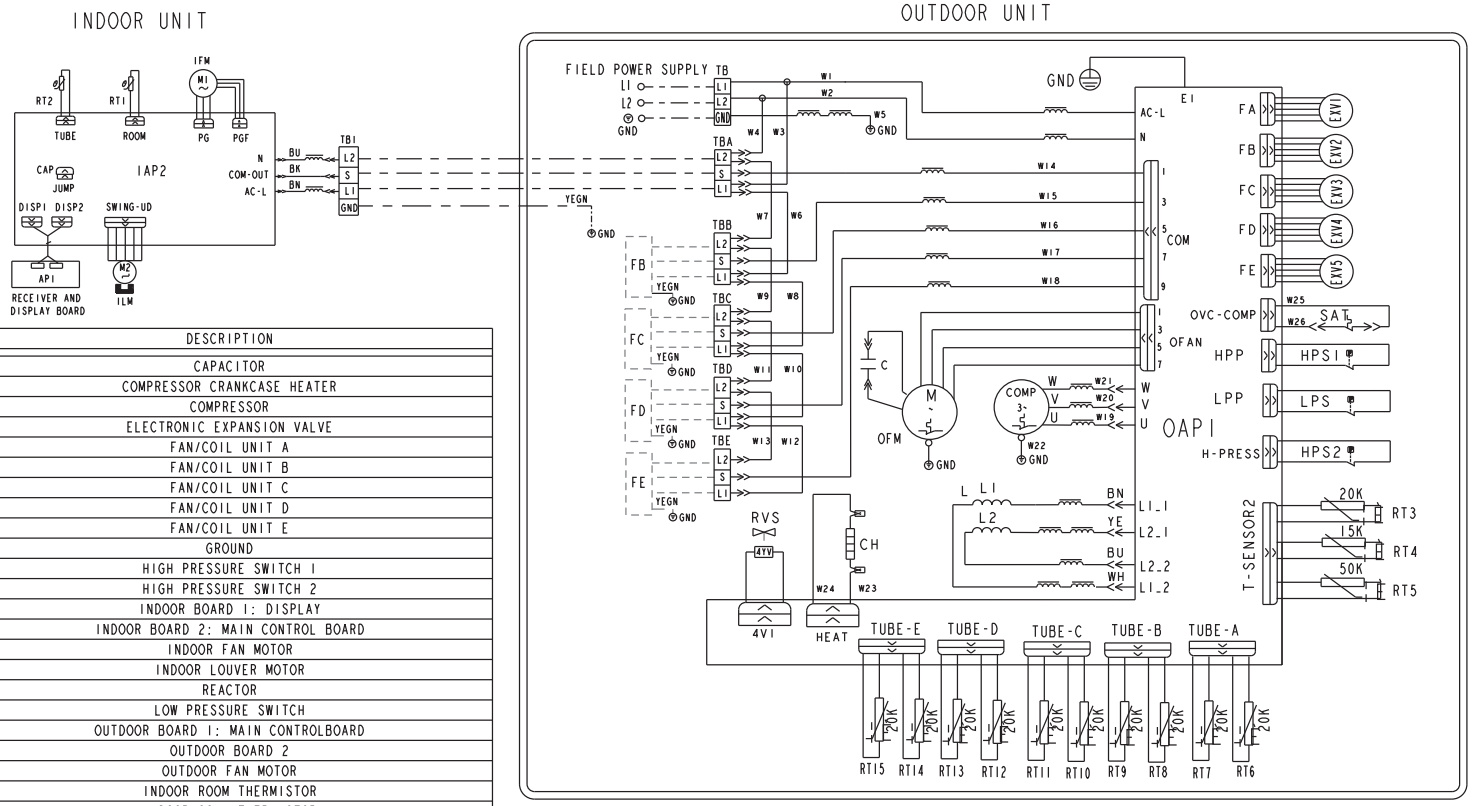

ITEM	DESCRIPTION
C	CAPACITOR
CH	COMPRESSOR CRANKCASE HEATER
COMP	COMPRESSOR
EXV	ELECTRONIC EXPANSION VALVE
FA	FAN/COIL UNIT A
FB	FAN/COIL UNIT B
FC	FAN/COIL UNIT C
FD	FAN/COIL UNIT D
FE	FAN/COIL UNIT E
GND	GROUND
HPS1	HIGH PRESSURE SWITCH 1
HPS2	HIGH PRESSURE SWITCH 2
IAP1	INDOOR BOARD 1: DISPLAY
IAP2	INDOOR BOARD 2: MAIN CONTROL BOARD
IFM	INDOOR FAN MOTOR
ILM	INDOOR LOUVER MOTOR
L	REACTOR
LPS	LOW PRESSURE SWITCH
OAP1	OUTDOOR BOARD 1: MAIN CONTROLBOARD
OAP2	OUTDOOR BOARD 2
OFM	OUTDOOR FAN MOTOR
RT1	INDOOR ROOM THERMISTOR
RT2	INDOOR COIL THERMISTOR
RT3	OUTDOOR COIL THERMISTOR
RT4	OUTDOOR AIR THERMISTOR
RT5	COMPRESSOR DISCHARGE THERMISTOR
RT6	UNIT A SUCTION THERMISTOR
RT7	UNIT A LIQUID THERMISTOR
RT8	UNIT B SUCTION THERMISTOR
RT9	UNIT B LIQUID THERMISTOR
RT10	UNIT C SUCTION THERMISTOR
RT11	UNIT C LIQUID THERMISTOR
RT12	UNIT D SUCTION THERMISTOR
RT13	UNIT D LIQUID THERMISTOR
RT14	UNIT E SUCTION THERMISTOR
RT15	UNIT E LIQUID THERMISTOR
RVS	REVERSING VALVE SOLENOID
SAT	COMPRESSOR OVERLOAD
TB	FIELD POWER SUPPLY TERMINAL BLOCK
TB1	INDOOR UNIT TERMINAL BLOCK
TBA, TBB, TBC, TBD AND TBE	INDOOR UNIT TERMINAL BLOCKS, FOR INDOOR UNITS A, B, C, D AND E
W	WIRE
———	FACTORY WIRING
- — - — - — -	FIELD WIRING

NOTES:
1. WIRE IN ACCORDANCE WITH THE NATIONAL ELECTRICAL CODE (N.E.C) AND LOCAL CODES.
2. IF ANY OF THE ORIGINAL WIRE FURNISHED NEEDS TO BE REPLACED, IT MUST BE REPLACED WITH TYPE 90C WIRE OR ITS EQUIVALENT.
⊗3. FOR ALL FIELD WIRES, USE COPPER CONDUCTORS ONLY, WITH A MINIMUM 300 VOLT, 2/64 INCH THICK INSULATION.

WIRE COLOUR LEGEND	
ITEM	COLOUR
BK	BLACK
BN	BROWN
BU	BLUE
GY	GRAY
OG	ORANGE
RD	RED
WH	WHITE
YE	YELLOW
YEGN	YELLOW/GREEN

A13097

Fig. 16 – 38GVM 42k Wiring Diagram

REFRIGERATION SYSTEM DIAGRAMS

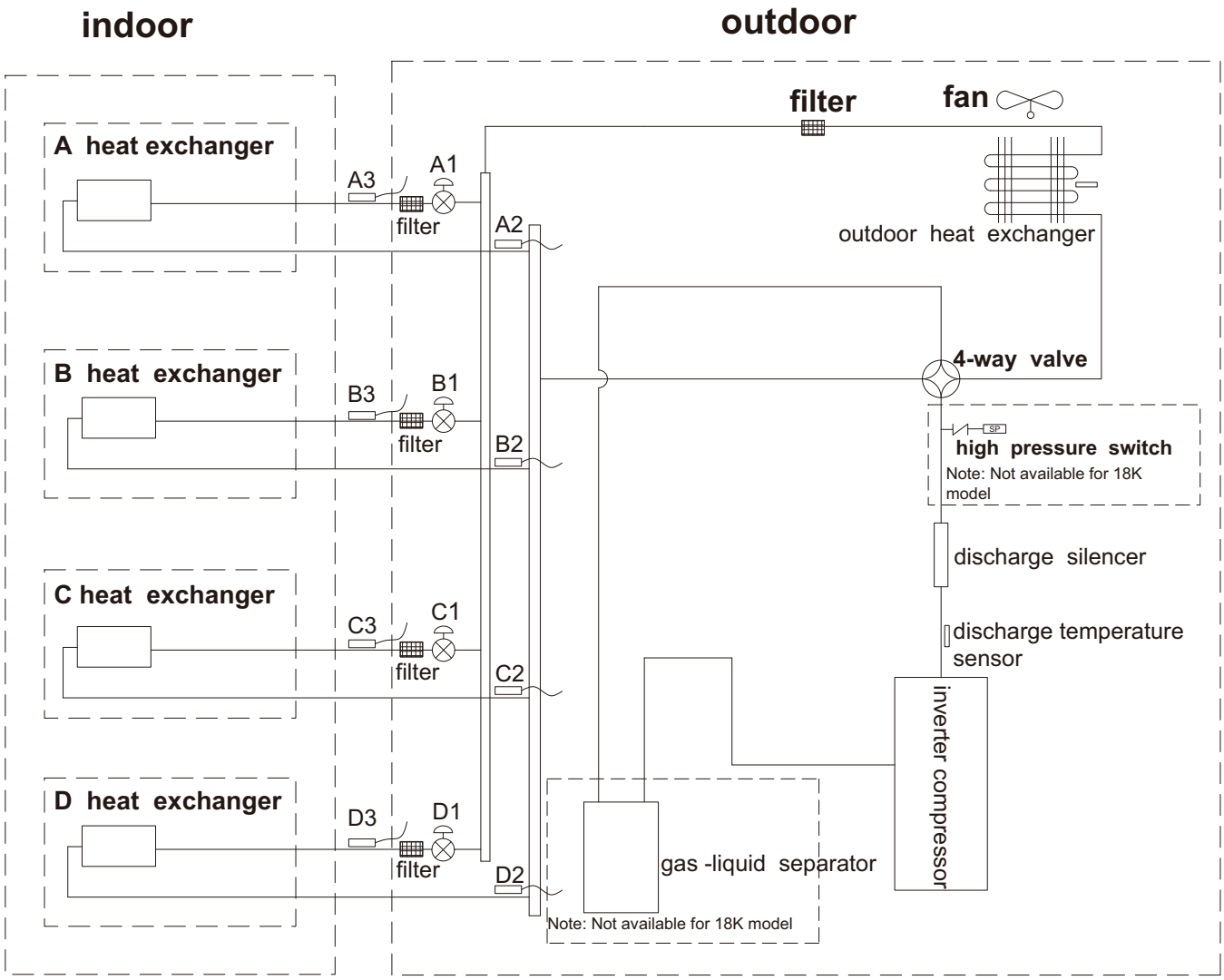

A1:A–unit electronic expansion valve **B1:B-unit electronic expansion valve**
C1:C-unit electronic expansion valve **D1:D-unit electronic expansion valve**
A2:A-unit gas pipe temperature sensor **B2:B-unit gas pipe temperature sensor**
C2:C-unit gas pipe temperature sensor **D2:D-unit gas pipe temperature sensor**
A3:A–unit liquid pipe temperature sensor **B3:B-unit liquid pipe temperature sensor**
C3:C-unit liquid pipe temperature sensor **D3:D-unit liquid pipe temperature sensor**

Fig. 17 – Refrigeration System Diagram 18k - 30k

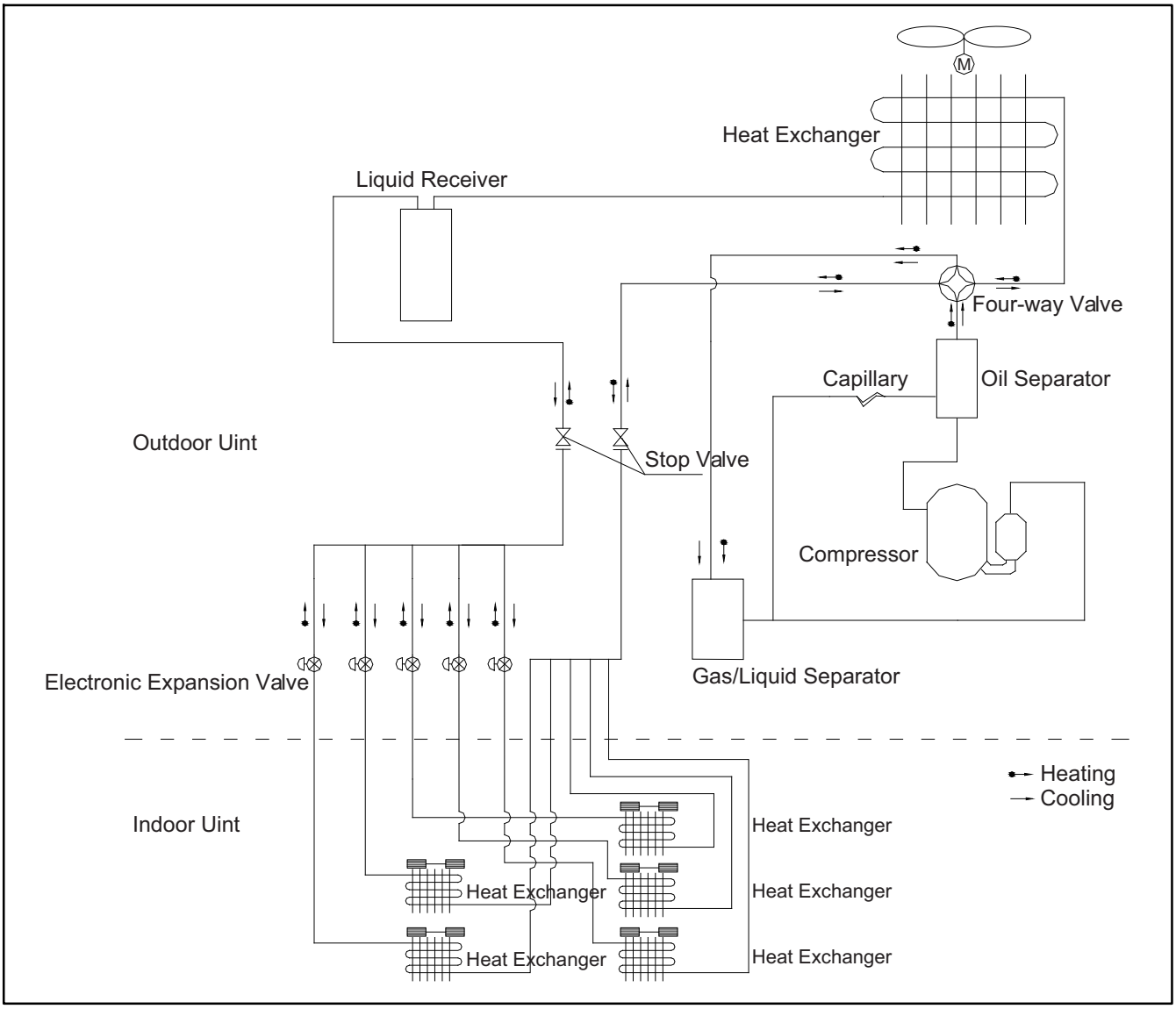

Fig. 18 – Refrigeration System Diagram 36k - 42k

SYSTEM EVACUATION AND CHARGING

⚠ CAUTION

UNIT DAMAGE HAZARD

Failure to follow this caution may result in equipment damage or improper operation.

Never use the system compressor as a vacuum pump.

Refrigerant tubes and indoor coil should be evacuated using the recommended deep vacuum method of 500 microns. The alternate triple evacuation method may be used if the procedure outlined below is followed. Always break a vacuum with dry nitrogen.

SYSTEM VACUUM AND CHARGE

Using Vacuum Pump

1. Completely tighten flare nuts A, B, C, D, connect manifold gage charge hose to a charge port of the low side service valve. (See Fig. 19.)
2. Connect charge hose to vacuum pump.
3. Fully open the low side of manifold gage. (See Fig. 20)
4. Start vacuum pump
5. Evacuate using either deep vacuum or triple evacuation method.
6. After evacuation is complete, fully close the low side of manifold gage and stop operation of vacuum pump.
7. The factory charge contained in the outdoor unit is good for up to 25 ft. (8 m) of line length. For refrigerant lines longer than 25 ft (8 m), add 0.1 oz. per foot of extra piping up to total allowable piping length aS listed in physical data.
8. Disconnect charge hose from charge connection of the low side service valve.
9. Fully open service valves B and A.
10. Securely tighten caps of service valves.

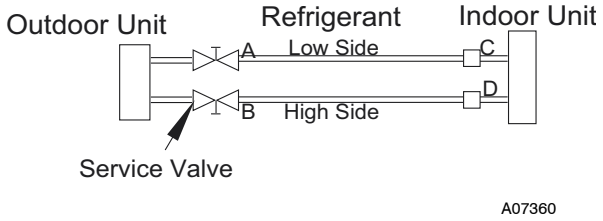

Fig. 19 – Service Valve

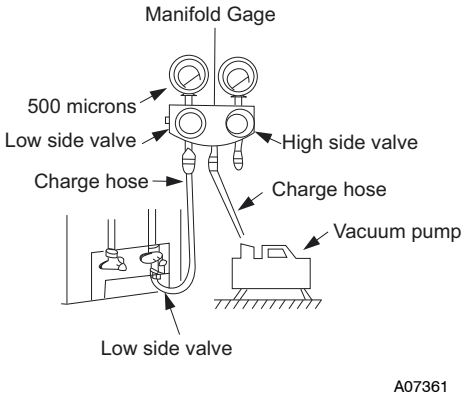

Fig. 20 – Manifold

Deep Vacuum Method

The deep vacuum method requires a vacuum pump capable of pulling a vacuum of 500 microns and a vacuum gage capable of accurately measuring this vacuum depth. The deep vacuum method is the most positive way of assuring a system is free of air and liquid water. (See Fig. 21)

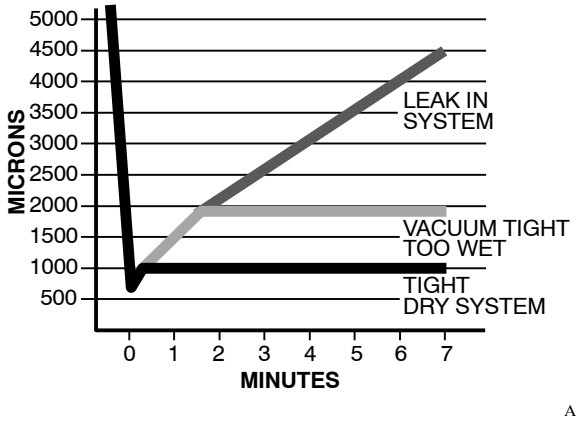

Fig. 21 – Deep Vacuum Graph

Triple Evacuation Method

The triple evacuation method should only be used when vacuum pump is only capable of pumping down to 28 in. of mercury vacuum and system does not contain any liquid water.

Refer to Fig. 22 and proceed as follows:

1. Pump system down to 28 in. of mercury and allow pump to continue operating for an additional 15 minutes.
2. Close service valves and shut off vacuum pump.
3. Connect a nitrogen cylinder and regulator to system and open until system pressure is 2 psig.
4. Close service valve and allow system to stand for 1 hr. During this time, dry nitrogen will be able to diffuse throughout the system absorbing moisture.
5. Repeat this procedure as indicated in Fig. 22. System will then be free of any contaminants and water vapor.

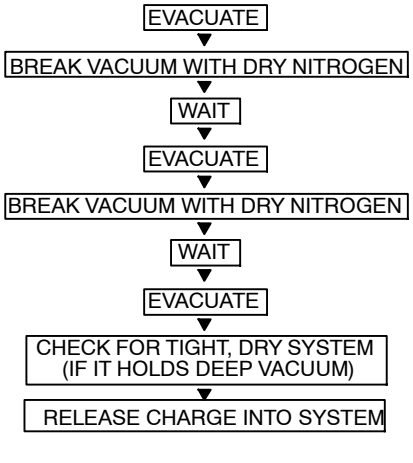

Fig. 22 – Triple Evacuation Method

Final Tubing Check

IMPORTANT: Check to be certain factory tubing on both indoor and outdoor unit has not shifted during shipment. Ensure tubes are not rubbing against each other or any sheet metal. Pay close attention to feeder tubes, making sure wire ties on feeder tubes are secure and tight.

REMOTE CONTROL AND FUNCTIONS

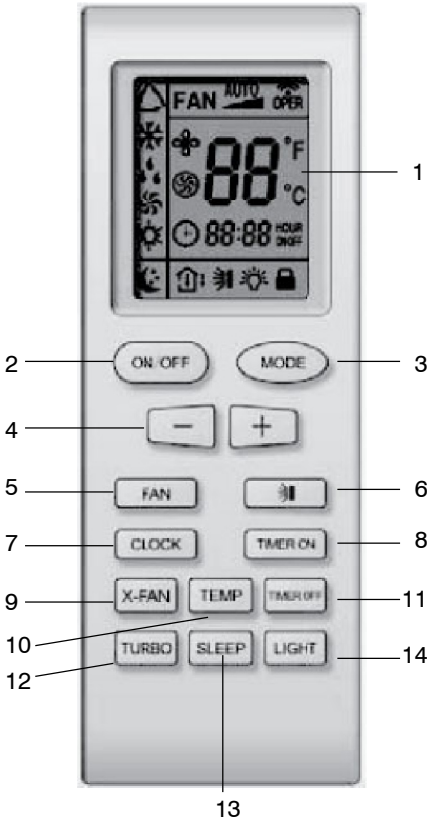

1. Remote Control Display
2. ON/OFF Button
3. MODE Button
4. Setpoint Clock, Timer Up (+) and Down (–) Buttons
5. Fan Speed
6. Horizontal Louver Swing Button
7. Clock Button
8. Timer ON Button
9. Dry Coil Button
10. Temperature Button
11. Timer OFF Button
12. Turbo Mode Button
13. Sleep Mode button
14. Light Button to Turn ON or OFF Display on Front Panel

A12434

Remote Control 09k - 18k

Remote Control Display

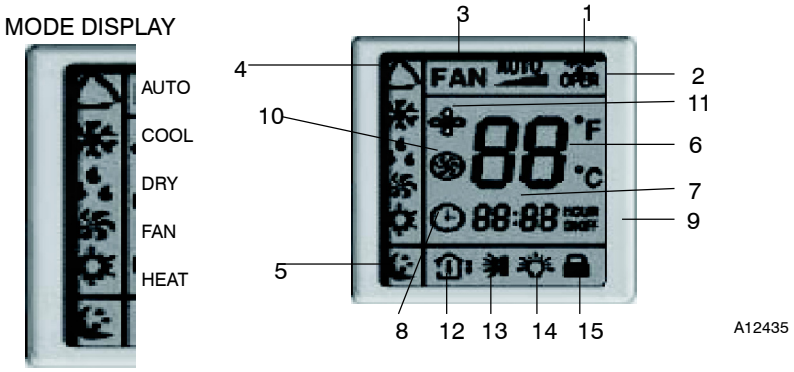

A12435

NOTE: Symbols shown in this manual are for the purpose of demonstration. During actual operation, only the relevant symbols are displayed.

1. **TRANSMISSION INDICATOR**: Illuminates when remote control transmits signals to the indoor unit.
2. **OPER INDICATOR**: This symbol appears when the unit is turned on by the remote control, and disappears when the unit is turned off.
3. **FAN SPEED DISPLAY**: Indicates the set fan speed. AUTO is displayed when unit is running in AUTO mode.
4. **MODE DISPLAY**: Indicates the current operation mode "AUTO", "COOL", "DRY", "FAN ONLY", or "HEAT"
5. **SLEEP DISPLAY**: Indicates unit is running in SLEEP mode.
6. **TEMPERATURE DISPLAY**: Temperature setting from 61°F (16°C) to 86°F (30°C) will be displayed. If FAN mode is selected, there will be no temperature displayed.
7. **CLOCK DISPLAY**: Indicates the current time (0 to 24 hours).
8. **CLOCK INDICATOR**: Displayed with time and is not displayed when setting ON/OFF timer.
9. **TIMER ON / TIMER OFF DISPLAY:** ON is displayed if TIMER ON is set. OFF is displayed if TIMER OFF is set. ON OFF displayed if both ON and OFF timers are set.
10. **TURBO DISPLAY:** Indicates unit is running in Turbo Mode.
11. **DRY COIL DISPLAY:** Indicates unit is running in DRY COIL mode where the fan continues to run after the unit is shut off to dry the coil.
12. **TEMPERATURE DISPLAY:** Indicates if room temperature or set point temperature is being displayed on the front panel.
13. **SWING DISPLAY:** Sets louver position or set louvers to continuously move for better air distribution.
14. **LIGHT DISPLAY:** Indicates if LED display on the front panel is illuminated.
15. **LOCK DISPLAY:** Indicates if remote control is locked.

⚠ CAUTION

EQUIPMENT DAMAGE HAZARD

Failure to follow this caution may result in equipment damage. Handle the control with care and avoid getting the control wet.

NOTE: The remote control is factory set to display temperatures in °F. If °C is desired, turn the remote off and then press the "MODE" and "-" buttons on the remote simultaneously.

IMPORTANT: The remote control can operate the unit from a distance of up to 25 ft. (7.6 m) as long as there are no obstructions. This is one way communication only (from remote control to fan coil).

The remote control can perform the following basic functions:

- Turn the system ON and OFF
- Select operating mode
- Adjust room air temperature set point and fan speed
- Adjust airflow direction

Refer to the *Remote Control Function* section for detailed description of all the capabilities of the remote control.

Battery Installation

Two AAA 1.5 v alkaline batteries (included) are required for operation of the remote control.

To install or replace batteries :

1. Slide the back cover off the control to open the battery compartment.
2. Remove old batteries if you are replacing the batteries.
3. Insert batteries. Follow the polarity markings inside the battery compartment.
4. Replace battery compartment cover.

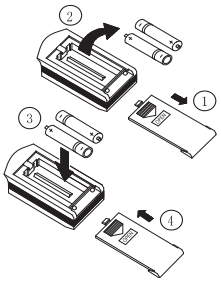

A08299

NOTE:

1. When replacing batteries, do not use old batteries or a different type battery. This may cause the remote control to malfunction.
2. If the remote is not going to be used for several weeks, remove the batteries. Otherwise battery leakage may damage the remote control.
3. The average battery life under normal use is about 6 months.
4. Replace the batteries when there is no audible beep from the indoor unit or if the Transmission Indicator fails to light.

Setting the Clock

Before you start operating the air conditioner, set the clock on the remote control as outlined below. The clock panel on the remote controller will display the time regardless of whether the air conditioner is in use or not.

Initial Setting of the Clock:

After batteries are inserted in the remote control, the clock panel will display "12:00".

1. Push the CLOCK button once ◷ will flash.
2. Push the "+" or "-" button. Each time you press the button, the time moves forward or backward by one minute depending on which button you press.
   If you push the "+" or "-" button continuously, the time adjusts in increments of 10 minutes.
3. When the right time is achieved, press the CLOCK button once to set the time. The ◷ will stop flashing.
4. To readjust the Clock, Press the CLOCK button on the remote. The ◷ will flash. Repeat steps 1 through 3.

NOTE: The time of the CLOCK must be set before the AUTO-TIMER function will operate.

⚠ CAUTION

UNIT OPERATION HAZARD

Failure to follow this caution may result in equipment damage or improper operation.

Static electricity or other factors (voltage fluctuations) can cause the remote control clock to reset. If your remote control is reset (the time of "12:00" flashing), set the clock before starting the unit.

Remote Control Operation - Quick Start

NOTE: When transmitting a command from the remote control to the unit, be sure to point the control toward the LED display on the front panel of the unit. The unit will confirm receipt of a command by sounding an audible beep.

1. Turn the unit on by pushing the **ON/OFF** button.
2. Select the desired mode by pushing the mode button.

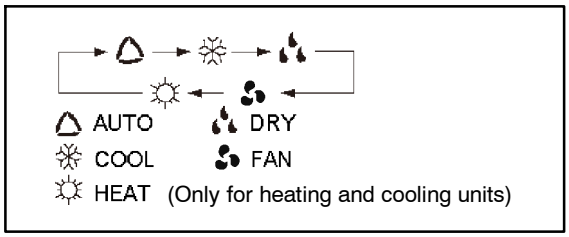

A08301

3. Select the temperature set point by pointing the control toward the unit and pressing the "+" or "-" temperature set point buttons until the desired temperature appears on screen. In AUTO mode, the setpoint temperature is not adjustable.
4. Select the desired fan speed by pressing the **FAN** button to select desired fan speed.

NOTE: If unit is operating in Dry mode (X-FAN), low fan speed will be displayed and the fan speed cannot be changed.

5. Set the airflow direction. When the unit is turned on, the louvers default to the cooling or heating position. The user can adjust the default louver position by pushing the "SWING" buttons. For details on operating the SWING louvers, refer to the Remote Control Functions section.

Emergency Operation

If the remote control is lost, damaged, or the batteries are exhausted, the **AUTO** button on the unit can be used to temporarily operate the unit.

Open the front cover panel and press the AUTO button once briefly when the system is off.

To stop emergency operation, push the **AUTO** button once. The emergency operation can also be stopped by pushing the "ON/OFF" button on the remote control.

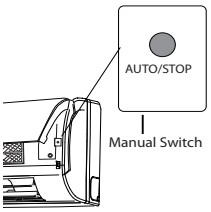

A12433

The following occurs when the AUTO button is pushed:

- No temperature will be displayed on display panel.
- Unit will run in FAN ONLY mode if return air temperature is between 68°F (20°C) and 77°F (25°C).
- Unit will run in HEATING if return air temperature is less than 68°F (20°C).
- Unit will run in COOLING if return air temperature is greater than 77°F (25°C).
- Fan speed will be set to AUTO
- SWING will be on.

FUNCTIONS

The remote control is the interface between the user and the high-wall systems. Commands are entered by the user to control the system. Any command that has been entered with the remote control will remain in the memory until it is changed by the user or the batteries are replaced.

NOTE: When entering commands, point the remote control in the direction of the LED display on the front panel. The OPER will appear for a short period of time on the remote control when the command is entered. The unit will only emit an audible beep when the signals are received correctly.

Locking Function:

Settings can be locked by pushing the "+" and "-" buttons simultaneously. When the remote is locked, no commands can be entered.

To unlock the remote, press "+" and "-" buttons simultaneously again.

ON/OFF:

When the air conditioner is not in operation, the remote control will display the last set point and time.

- Press the On/Off button to start the unit.
  - The unit will start in the last operating mode and set point. The "OPER" indicator will appear. The "RUN" indicator on the display panel turns green.
- Press button On/Off to stop the unit.
  - The "RUN" indicator light on the display panel will turn red and the remote control will display the setpoint and time. "OPER" will disappear.

NOTE: If the On/Off button is pressed too soon after a stop, the compressor will not start for 3 minutes due to the inherent protection against frequent compressor cycling.

When turning the unit ON and OFF, the Timer and Sleep functions will be canceled.

SELECTING THE OPERATING MODE:

Use the MODE button to select available modes. The selected mode will be displayed on the remote control and the appropriate light will illuminate on the unit's display panel.

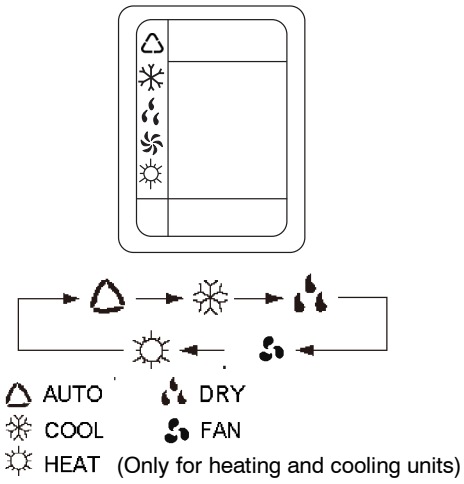

A09641 /A09628b

Mode Descriptions

AUTO MODE

AUTO mode is the default setting at start-up. In AUTO mode, the set temperature will not be displayed on the LCD, and the unit will automatically select the suitable operation mode to provide comfort based on parameters set from the factory.

FUNCTION AND CONTROLS CONTINUED

COOL & HEAT MODES

Press the "+" and "-" buttons to select the temperature. The unit will confirm signal receipt with a beep and the value of the set temperature is displayed on the remote and on the front panel display.

The temperature can be set between 61°F (16°C) and 86°F (30°C).

NOTE: In Cooling mode, if the temperature selected is higher than the room temperature, the unit will not start. The same applies for the Heating mode if the selected temperature is lower than the room temperature.

DRY MODE

This is a dehumidification mode of operation. The system will dry the filter and slightly cool the room air temperature. This mode does not take the place of a dehumidifier.

In DRY mode, the indoor fan will operate continuously in low speed. The fan speed is not adjustable.

FAN MODE

This mode filters and circulates room air at the selected fan speed. See figure below for selecting fan speed.

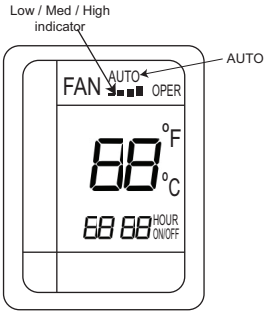

A09649

The fan speed is selected by pressing the FAN button. This button is used to set the fan speed in the following sequence:

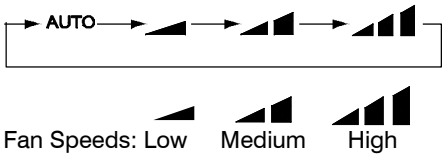

NOTE: When the unit is on, the fan will run continuously in cooling or heating. When in heating, there might be situations where the fan will slow down or shut off to prevent cold blow.

TURBO MODE

The desired setpoint, either in heating or cooling, can be achieved faster if TURBO mode is used. After selecting the "HEAT" or "COOL" mode button, push the "TURBO" button. This will force the unit to run at super high speed. When the setpoint is satisfied, push the "TURBO" button again. The unit will run at the selected fan speed.

When TURBO mode is running, the following is displayed on the remote control:

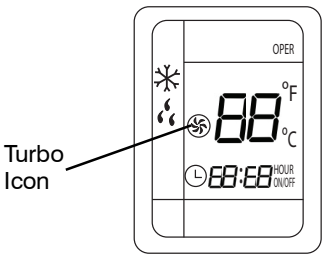

A09636

Displaying Setpoint or Room Temperatures on Front Panel

The setpoint temperature or room temperature can be displayed on the front panel. Only setpoint temperature is displayed on the remote.

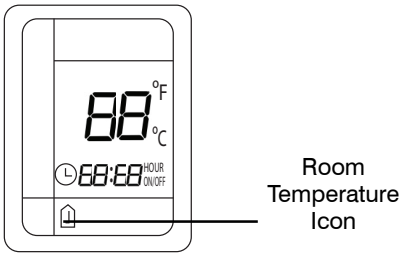

A09638

When the "TEMP" button is pushed once, the temperature indicator (without thermometer) is displayed. This indicates that the setpoint temperature is displayed on the front panel.

When the "TEMP" button is pushed a second time, a thermometer is displayed inside the temperature indicator. This indicates that the room temperature is displayed on the front panel.

NOTE: If any other button is pushed on remote control, the temperature will return to the set point temperature. Outdoor air temperature is not available.

Using Dry Coil Function (X-Fan):

When operating in humid areas, hi-wall units have a DRY COIL function that will allow the indoor fan to run for a pre-determined amount of time (10 minutes) after the unit is turned off **(cooling or dry modes)** to ensure that additional moisture is removed from coil. Push the "X-FAN" button to enable this feature. This will be displayed on remote control.

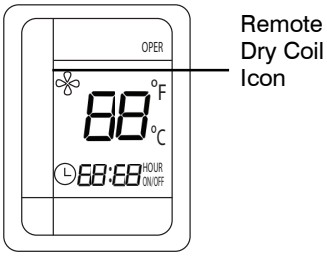

A09637

To deactivate this feature, push the "X-FAN" button again.

Selecting the Horizontal Direction Louver Position

When the unit is turned on, the louvers default to the cooling or heating position.

If the louver position is not providing adequate comfort due to room layout or where people are gathered, two options are available to correct the situation:

Setting the louvers in a stationary position (other than default for heating and cooling):

The stationary position can be one of five (5) default positions.

To change the louver position, press the "SWING" button once. The icon is displayed on the remote.

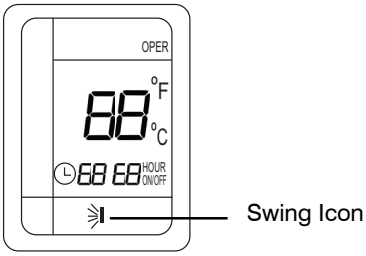

A09640

When the is displayed, the louver will swing continuously between positions 1 and 5 as shown below.

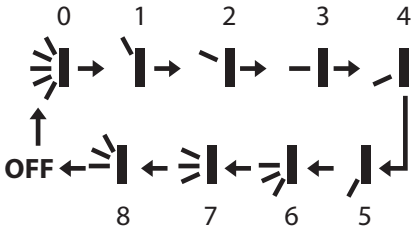

A09634

If the "SWING" button is pushed again,the louver will move to position 1. If position 2 through 5 is desired, push the button repeatedly until the desired position (2 through 5) is displayed on remote control.

Setting the louvers to move continuously:

This setting allows the louvers to move continuously between either positions 1 through 5, or between positions 6, 7, and 8.

Push the button once to have louvers swinging between positions 1 and 5. If position 6, 7, or 8 is desired, push the button repeatedly until the desired position is displayed on the remote.

NOTE: Always use the remote control to adjust the horizontal louver position otherwise, abnormal operation may occur. If this occurs, turn the unit off and then on again.

Sometimes, in the heating mode, when the "SWING" button is pushed, the louvers will not start moving right away. This is due to the fact that the fan will not start running until the coil temperature is warm enough to prevent discomfort to the user by blowing cold air.

Sleep Mode

This mode is used to conserve energy and can be used when the unit is in the COOL, HEAT or DRY mode only.

For Cooling Mode:

- Push the SLEEP button. The SLEEP display will appear on the remote control.

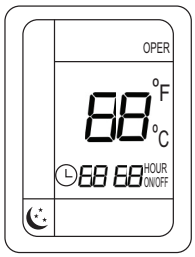

A09644

- After 1 hour the set point will be raised by 1.8°F (1°C).
- After another hour, the set point will be raised by another 1.8°F (1°C) and the fan will run in low speed.
- The SLEEP mode will be cancelled when the SLEEP button is pushed again.

For Heating Mode:

- Same as cooling mode but set points will be lowered by 1.8°F (1°C) and the HEAT icon will disappear from the display panel.

Timer Function

TIMER ON (to start the unit) and TIMER OFF (to stop the unit) can be used separately or together. The clock on the remote control must be set before using this function.

Timer ON only

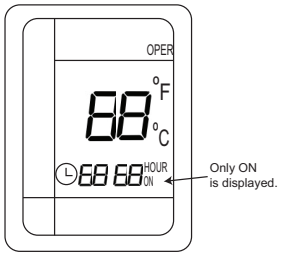

A09639

This function will allow the unit to start automatically at the set time. The TIMER ON can be set while the unit is on or off.

To set the TIMER ON function, perform the following:

1. Push the "TIMER ON" button once.
2. The clock indicator and time will not be displayed on the remote control. The default "TIMER ON" time (first time function is used) or the last time setting will be displayed and "ON" will flash.
3. Push the "-" or "+" within 5 seconds until the desired on time is displayed.

NOTE: Pressing the "-" or "+" will decrease or increase the time in 1 minute increments.
Pressing the "-" or "+" continuously will decrease or increase the time in 10 minute increments.

4. Push the "TIMER ON" again. The "ON" icon will stop blinking and the time at which the unit will start is set. The clock indicator and the time will be displayed again.

The "TIMER ON" time will be stored in memory indefinitely until it is cancelled by the user by pushing the "TIMER ON" button or the remote control batteries are replaced.

If the unit is running and the "TIMER ON" set time is reached, the unit will continue operating normally.

NOTE: When the unit is shut off by the user using the "ON/OFF" button, and if the "TIMER ON" is set, the following will be displayed on the remote control.
- Set Point
- Time
- Clock indicator next to time indicates TIMER ON is set.

On the display panel, the operation light will turn red.
When the "TIMER ON" set time is reached, the display on the remote does not change, but the unit will run as indicated by the operation light on the front cover turning green. To get display on the remote, push the "ON/OFF" button once.

Timer OFF only

This function will allow the unit to stop automatically at the set time. The timer can be set while the unit is on or while it is off.

To set the "TIMER OFF" function, perform the following:

1. Push the "TIMER OFF" button once.
2. The clock indicator and time will not be displayed. "OFF" will be flashing.
3. Push the "-" or "+" button within 5 seconds until the desired ON time is displayed.

NOTE: Pressing the " -" or "+" will decrease or increase the time in 1 minute increments.
Pressing the "-" or "+" continuously, will decrease or increase the time in 10 minute increments.

4. Push the "TIMER OFF" button again, the "OFF" icon will stop blinking and the time at which the unit will turn off is set. The clock indicator and the time will be displayed again.

FUNCTION AND CONTROLS CONTINUED

The “TIMER OFF” time will be stored in memory indefinitely until is is cancelled by pushing the the “TIMER OFF” button or the batteries are replaced in the remote control.

If the unit is running and the “TIMER OFF” set time is reached, the unit will turn off and the operation indicator light on the front panel will turn red. The display on the remote control will remain the same as when the unit was running. To turn the unit on again, push the “ON/OFF” button twice. The operation indicator light on the front panel will turn green.

Timer ON and Timer OFF

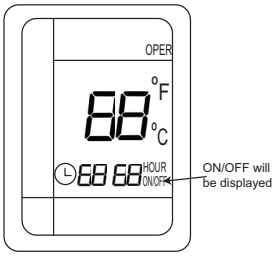

A09643

Use both functions as described in “TIMER ON” and “TIMER OFF” sections to program the unit to turn on and shut off at specified times. Times will be stored in memory until cancelled by user or the remote control batteries are replaced.

Light Function

This function will allow the user to Turn ON or OFF the display on the front panel.

Press the light icon to turn the indoor unit front panel ON or OFF. The remote control will display the Light Icon as shown below.

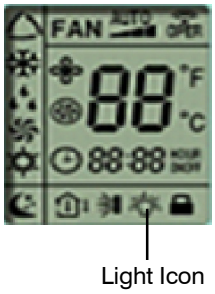

A12435

Time Delay

If the On/Off button is pressed too soon after a stop, the compressor will not start for 3 minutes due to the inherent protection against frequent compressor cycling. The unit will only emit an audible beep when the signals are received correctly.

Heating Features

If the unit is in the heating mode, there will be a delay when the fan starts. The fan will start only after the coil is warmed up to prevent cold blow.

Defrost Operation

In heating mode, if the outdoor coil is frosted, the indoor fan and outdoor fan will turn off while system removes the frost on the outdoor coil. “H1” will be displayed on the display panel on the front cover of the unit.

The system will automatically revert to normal operation when frost is removed from the outdoor unit, and “H1” will disappear.

Auto Start

If the power fails while the unit is operating, the unit stores the operating condition, and it will start operation automatically under those conditions when the power is restored.

TROUBLESHOOTING

Precautions for Performing Inspections and Repairs

Be cautious during installation and maintenance. Follow all rules and regulations to avoid electric shock and to prevent injury or damage.

⚠ WARNING

ELECTRICAL SHOCK HAZARD

Failure to follow this warning could result in personal injury or death.

Before installing, modifying, or servicing system, main electrical disconnect switch must be in the OFF position. There may be more than one disconnect switch. Lock out and tag switch with a suitable warning label.

Static Maintenance

Static Maintenance is maintenance during de-energization of the air conditioner.

For static maintenance, make sure that the unit is de-energized and the plug is disconnected.

Dynamic Maintenance

Dynamic maintenance is the maintenance during energization of the unit.

Before dynamic maintenance, check the electricity and ensure that there is a good ground. Check if there is electricity on the case and copper pipe of the air conditioner with a voltage tester.

⚠ WARNING

ELECTRICAL SHOCK HAZARD

Failure to follow this warning could result in personal injury or death.

A large-capacity electrolytic capacitor is used in the outdoor unit controller (inverter). When the power supply is turned off, charge (charging voltage DC280V to 380V) remains and takes a long time to discharge.

Do Not open the outdoor unit for 20 minutes after power has been turned OFF.

Take sufficient care to avoid directly touching any of the circuit parts without first turning off the power.

At times, such as when the circuit board is to be replaced, place the circuit board assembly in a vertical position.

Diagnose troubles according to the trouble diagnosis procedure as described below.

Also refer to the check points in servicing written on the wiring diagrams attached to the indoor/outdoor units.

No.	Trouble Shooting Procedure
1	Confirmation
2	Code displays interpretation of error codes.
3	Basic System Check

Confirmation:

1. Confirmation of Power Supply: Confirm that the power breaker operates normally and provides power
2. Confirmation Voltage: Confirm that voltage is AC 220-240 ±10%. If voltage is not in this range, the unit may not operate normally.

TROUBLESHOOTING CONTINUED

Basic Troubleshooting

PROBLEM	POSSIBLE CAUSE	SOLUTION
Indoor unit emits a bad odor on start-up	• Air filter dirty • Output air still has odor after cleaning filter.	• Clean the air filter • Contact your service representative.
You hear water flowing noise when the unit is running	• This is normal and is the refrigerant flowing through the system.	• No maintenance required
Indoor unit produces a mist when the air conditioner is running	• This is normal cooling and is caused by high humidity and temperature in the room.	• No maintenance required. Mist should stop as room is cooled down and the humidity is removed.
Wireless remote control does not work	• Batteries are dead. • Unit needs to be reset.	• See battery replacement section in this manual and replace batteries. • Turn off power to indoor unit. Remove plug from wall and then reinsert plug. Restart unit.
Water leaks into room from Indoor unit	• Condensing water has overflowed	• Check indoor condensing drain or call your representative.
Unit/System Does Not Work	• To protect the unit upon an immediate restart after a stop, the system controller will delay the unit for 3 minutes before allowing the unit to start back up. • The circuit breaker has tripped or a fuse has blown. • Power failure. • Error codes displayed • Voltage is too low.	• After turning unit off, wait at least 3 minutes before trying to restart. • Reset the circuit breaker or replace the fuse with the specified replacement fuse. • Restart operation when the power is restored. • Call your service representative. • Call your service representative.
Cooling is Not Working Properly	• The filter is blocked with dust. • Temperature is not set properly. • A window or door is open. • The outdoor unit is obstructed. • The fan speed is too low. • The operation mode is in Fan instead of Cool.	• Clean the air filter. • Check the temperature and reset if necessary. • Close the window or door. • Remove the obstruction. • Change the fan speed selection. • Change the operating mode to Cool or reset the unit.
Heating is Not Working Properly	• The filter is blocked with dust. • Temperature is set too low. • A window or door is open. • The outdoor unit is obstructed.	• Clean the air filter. • Check the temperature and reset if necessary. • Close the window or door. • Remove the obstruction.
Unit Stops During Operation	• The Off timer is not operating correctly. • Error codes displayed	• Restart the operating mode. • Call your service representative.

38GVM Diagnostic Codes

18, 24, and 30K	36 and 42K	Indoor Unit Display	Indoor and/or Outdoor Unit Error
NA	Defrost Mode 1	08	Outdoor
NA	Defrost Mode 2	0A	Outdoor
Inlet tube temperature sensor malfunction	Inlet tube temperature sensor malfunction	See Error Code Table	Indoor
Outlet tube temperature sensor malfunction	Outlet tube temperature sensor malfunction	See Error Code Table	Indoor
Low charge or refrigeration system blockage	NA	F0	Outdoor
Indoor return air temperature sensor malfunction	Indoor return air temperature sensor malfunction	See Error Code Table	Indoor
Indoor tube temperature sensor malfunction	Indoor tube temperature sensor malfunction	See Error Code Table	Indoor
Outdoor ambient temperature sensor malfunction	Outdoor ambient temperature sensor malfunction	F3	Outdoor
NA	Outdoor mid−coil temperature sensor malfunction	F4	Outdoor
Outdoor discharge air temperature sensor	Outdoor discharge air temperature sensor	F5	Outdoor
Cooling oil return cycle	Cooling oil return cycle	F7	Outdoor
System high pressure protection	System high pressure protection	E1	Outdoor
Indoor freeze protection	Indoor freeze protection	E2	Indoor
System low pressure protection	System low pressure protection	E3	Outdoor
Compressor discharge high temperature protection	Compressor discharge high temperature protection	E4	Outdoor
Communication error between indoor and outdoor	Communication error between indoor and outdoor	E6	Indoor and outdoor
Mode conflict	Mode conflict	E7	Indoor
System overload protection	System overload protection	E8	Outdoor
Cold Blow Protection	NA	E9	Indoor
Test mode	Test mode	dd	Outdoor
Pump down mode	Pump down mode	Fo	Outdoor
IPM Rest	IPM Rest	P0	Outdoor
Compressor current protection	Compressor current protection	P5	Outdoor
NA	Communication error between the inverter drive and main board	P6	Outdoor
Heat sink temperature sensor malfunction	Heat sink temperature sensor malfunction	P7	Outdoor
IPM over temperature protection	IPM over temperature protection	P8	Outdoor
NA	Open Contactor	P9	Outdoor
Current sensor malfunction	Current sensor malfunction	Pc	Outdoor
NA	Current sensor mis−wiring protection	Pd	Outdoor
Input current protection	Input current protection	PA	Outdoor
NA	Inverter board ambient temperature sensor malfunction	PF	Outdoor
Low voltage protection	Low voltage protection	PL	Outdoor
High voltage protection	High voltage protection	PH	Outdoor
NA	Abnormal input AC voltage	PP	Outdoor
Capacitor charging malfunction	Capacitor charging malfunction	PU	Outdoor
Defrost or heating oil return cycle	Heating oil return cycle	H1	Outdoor
NA	Forced defrost	H1	Outdoor
Compressor overheat protection	Compressor overheat protection	H3	Outdoor
IPM Protection	IPM Protection	H5	
Compressor speed reduction	Compressor speed reduction	H7	Outdoor
PFC board protection	PFC board protection	Hc	Outdoor
Compressor high voltage protection	NA	L9	Outdoor
Compressor start−up failure	Compressor start−up failure	Lc	Outdoor
Compressor phase loss protection	Compressor phase loss protection	Ld	Outdoor
NA	Compressor stalling	LE	Outdoor
NA	Compressor over−speed protection	LF	Outdoor
NA	Condenser coil inlet temp sensor malfunction	A5	Outdoor
NA	Condenser outlet temperature sensor malfunction	A7	Outdoor
Memory card error	NA	EE	Outdoor
Frequency limitation for module circuit protection	NA	En	Outdoor
Frequency limitation for module temperature protection	NA	EU	Outdoor
Frequency limitation for overload protection	NA	F6	Outdoor
Frequency limitation for system circuit protection	NA	F8	Outdoor
Frequency limitation for module circuit protection	NA	F9	Outdoor
Frequency limitation for freeze protection	NA	FH	Outdoor
Compressor demagnetizing protection	NA	HE	Outdoor
Indoor and outdoor units mismatch	NA	LP	Outdoor and Indoor
Compressor phase detection malfunction	NA	U1	Outdoor
Low DC bus voltage	NA	U3	Outdoor
Communication error between main board and EXV	Communication error between main board and EXV	dn	Outdoor

Error Code Table

Error Code	Error Description	Error Code	Error Description	Error Code	Error Description
13	Unit A indoor pipe outlet temperature sensor malfunction	23	Unit B indoor pipe outlet temperature sensor malfunction	33	Unit C indoor unit pipe outlet temperature sensor malfunction
14	Unit A indoor pipe inlet temperature sensor malfunction	24	Unit B indoor pipe inlet temperature sensor malfunction	34	Unit C indoor unit pipe inlet temperature sensor malfunction
15	Unit A Indoor return air sensor mal-function	25	Unit B Indoor return air sensor malfunction	35	Unit C Indoor unit return air sensor malfunction
16	Unit A mode conflict	26	Unit B mode conflict	36	Unit C mode conflict
17	Unit A freeze protection	27	Unit B freeze protection	37	Unit C freeze protection
41	Unit D communication error	46	Unit D mode conflict	54	Unit E indoor pipe inlet temperature sensor malfunction
42	Indoor return air temperature sensor malfunction	47	Unit D freeze protection	55	Unit E Indoor return air temperature sensor malfunction
43	Unit D indoor pipe outlet temperature sensor malfunction	51	Unit E communication error	56	Unit E mode conflict
44	Unit D indoor pipe inlet temperature sensor malfunction	52	Unit E indoor pipe midway temperature sensor malfunction	57	Unit E freeze protection
45	Unit D Indoor return air temperature sensor malfunction	53	Unit E indoor pipe outlet temperature sensor malfunction	C5	Jumper missing on replacement indoor board

Note: Refer to Appendix Tables 1 – 3 on pages 44 – for sensor code information.

Malfunction Indicator

Note: ○: off ●: on ◎: blink

When several malfunctions occur at the same time, they will be displayed in circulation and every malfunction is displayed for 5s.

NO	Malfunction description	LED1	LED2	LED3	LED4
0	Normal stop operation	○	○	○	○
1	Normal compressor operation	●	○	○	○
2	Compressor overload protection	◎	○	○	○
3	Discharge temperature protection	○	●	○	○
4	Outdoor unit overload protection	●	●	○	○
5	High pressure protection	◎	●	○	○
6	Over current protection	○	◎	○	○
7	IPM protection	●	◎	○	○
8	IPM over heating protection	◎	◎	○	○
9	PFC protection (including PFC overheating protection)	○	○	●	○
10	Phase protection	●	○	●	○
11	High voltage protection	◎	○	●	○
12	Low voltage protection	○	●	●	○
13	Start failure	●	●	●	○
14	Compressor desynchronizing	◎	●	●	○
15	Compressor phase-drop protection	○	◎	●	○
16	Compressor phase detection malfunction	●	◎	●	○
17	Memory chip malfunction	◎	◎	●	○
18	DC power supply short circuit	○	○	◎	○
19	Normal defrost operation	●	○	◎	○
20	Normal oil return operation	◎	○	◎	○
21	Complete unit frequency reduction protection	○	●	◎	○
22	Complete unit frequency reduction protection	●	●	◎	○
23	Unit A frequency restriction or frequency reduction protection	◎	●	◎	○
24	Unit B frequency restriction or frequency reduction protection	○	◎	◎	○
25	Unit C frequency restriction or frequency reduction protection	●	◎	◎	○
26	Unit D frequency restriction or frequency reduction protection	◎	◎	◎	○
27	Outdoor ambient temperature sensor malfunction	○	○	○	●
28	Outdoor tube temperature sensor malfunction	●	○	○	●
29	Discharge temperature sensor malfunction	◎	○	○	●
30	IPM thermal resistance malfunction	○	●	○	●
31	Unit A liquid pipe temperature sensor malfunction	●	●	○	●
32	Unit A gas pipe temperature sensor malfunction	◎	●	○	●
33	Unit B liquid pipe temperature sensor malfunction	○	◎	○	●
34	Unit B gas pipe temperature sensor malfunction	●	◎	○	●
35	Unit C liquid pipe temperature sensor malfunction	◎	◎	○	●
36	Unit C gas pipe temperature sensor malfunction	○	○	●	●
37	Unit D liquid pipe temperature sensor malfunction	●	○	●	●
38	Unit D gas pipe temperature sensor malfunction	◎	○	●	●
39	Unit A mode conflict	○	●	●	●
40	Unit B mode conflict	●	●	●	●
41	Unit C mode conflict	◎	●	●	●
42	Unit D mode conflict	○	◎	●	●

43	Communication failure with Unit A	●	◎	●	●
44	Communication failure with Unit B	◎	◎	●	●
45	Communication failure with Unit C	○	○	◎	●
46	Communication failure with Unit D	●	○	◎	●
47	Unit A freeze protection	◎	○	◎	●
48	Unit B freeze protection	○	●	◎	●
49	Unit C freeze protection	●	●	◎	●
50	Unit D freeze protection	◎	●	◎	●
51	Unit A overheating prevention protection	○	◎	◎	●
52	Unit B overheating prevention protection	●	◎	◎	●
53	Unit C overheating prevention protection	◎	◎	◎	●
54	Unit D overheating prevention protection	○	○	○	◎
55	Unit A communication wire misconnection or expansion valve malfunction	●	○	○	◎
56	Unit B communication wire misconnection or expansion valve malfunction	◎	○	○	◎
57	Unit C communication wire misconnection or expansion valve malfunction	○	●	○	◎
58	Unit D communication wire misconnection or expansion valve malfunction	●	●	○	◎

Malfunction Checking and Elimination

NOTE: Discharge power capacities at positions shown below. Voltage should be less than 20v (measured with a meter) prior to initiating service work.

18k

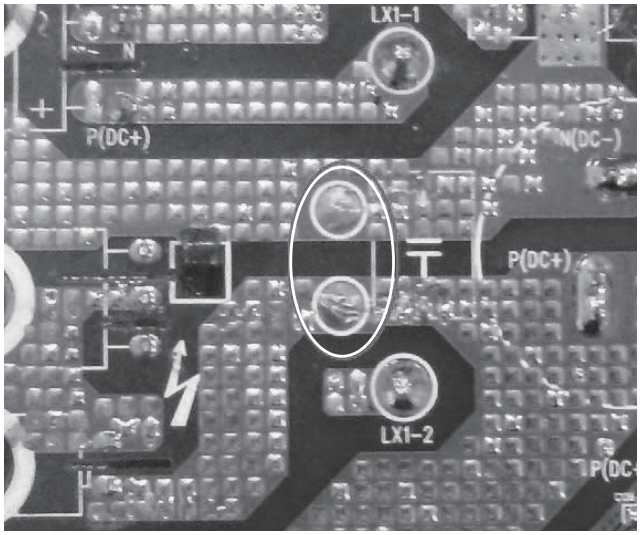

24/30k

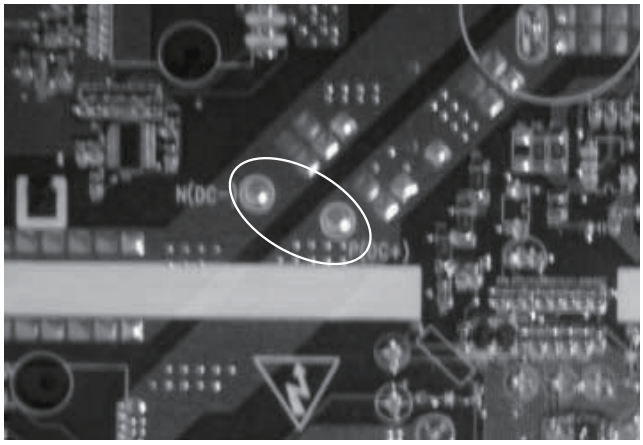

(1) IPM protection malfunction:

Main checking point:

- Is the input voltage of the unit within the acceptable range?
- Is the compressor connected correctly?
- Is the compressor winding resistance correct?
- Are the heat exchangers clean / unblocked?
- Is the refrigerant charge correct?

Flow chart:

TROUBLESHOOTING CONTINUED

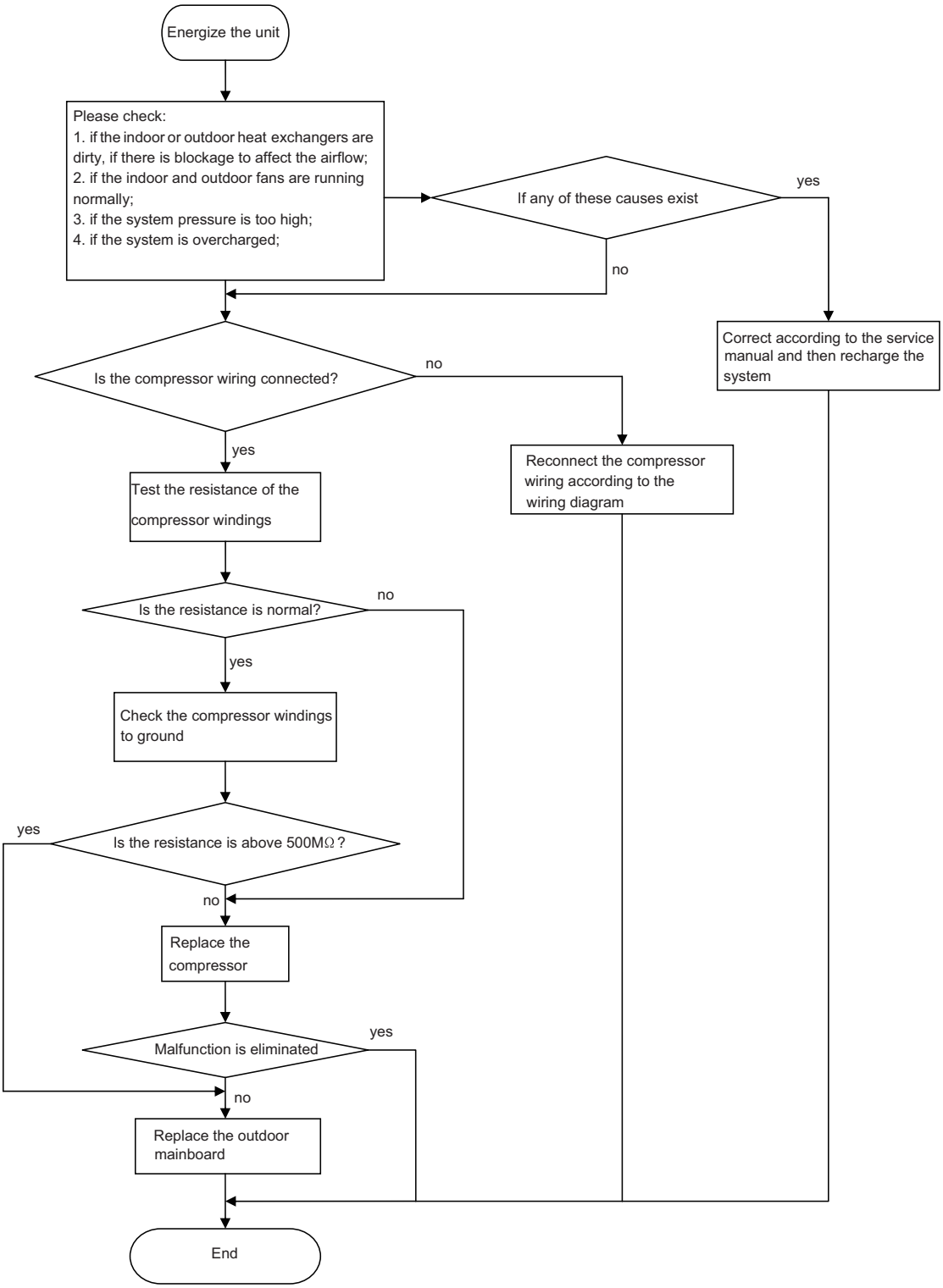

(2) PFC protection malfunction

Main checking points:

- Is the power supply correct?;
- Is the reactor broken or mis-wired? ;

Flow chart:

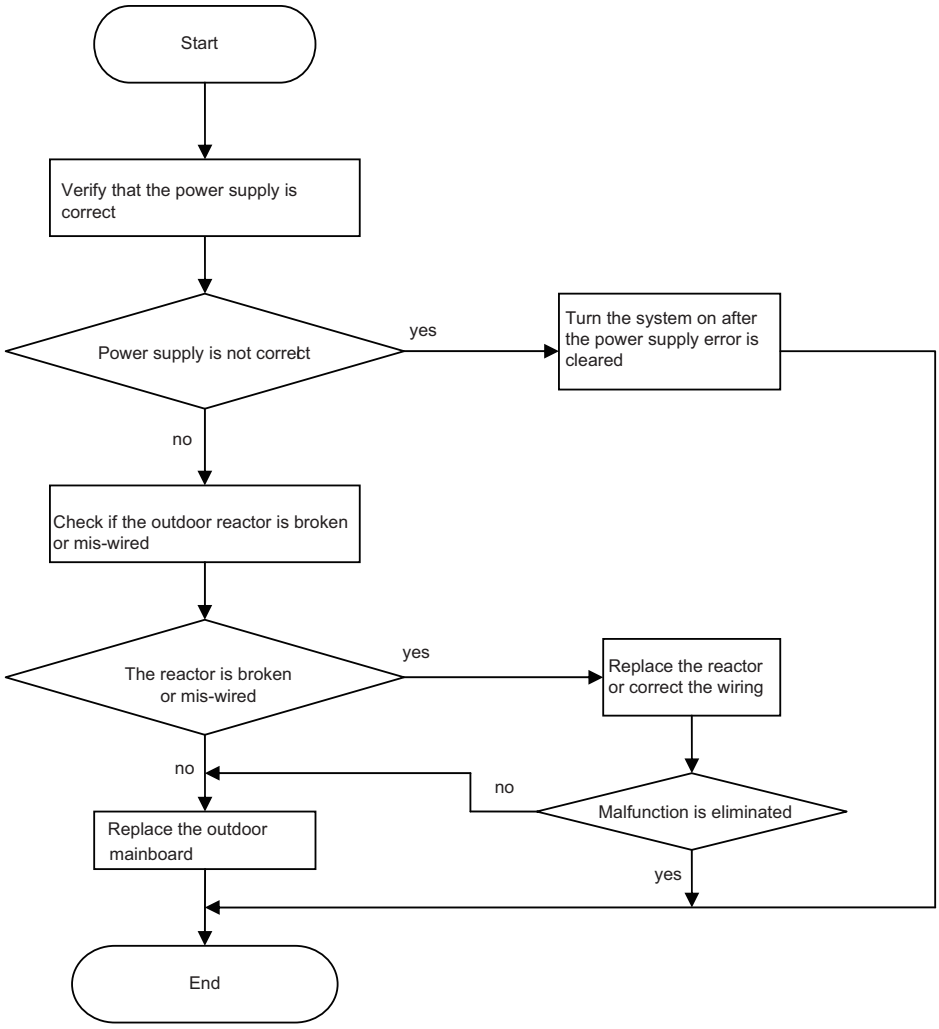

(3) Capacity charging malfunction

Main checking points:

- Is the wiring of the reactor connected correctly or is the reactor broken;
- Is the mainboard broken;

Flow chart:

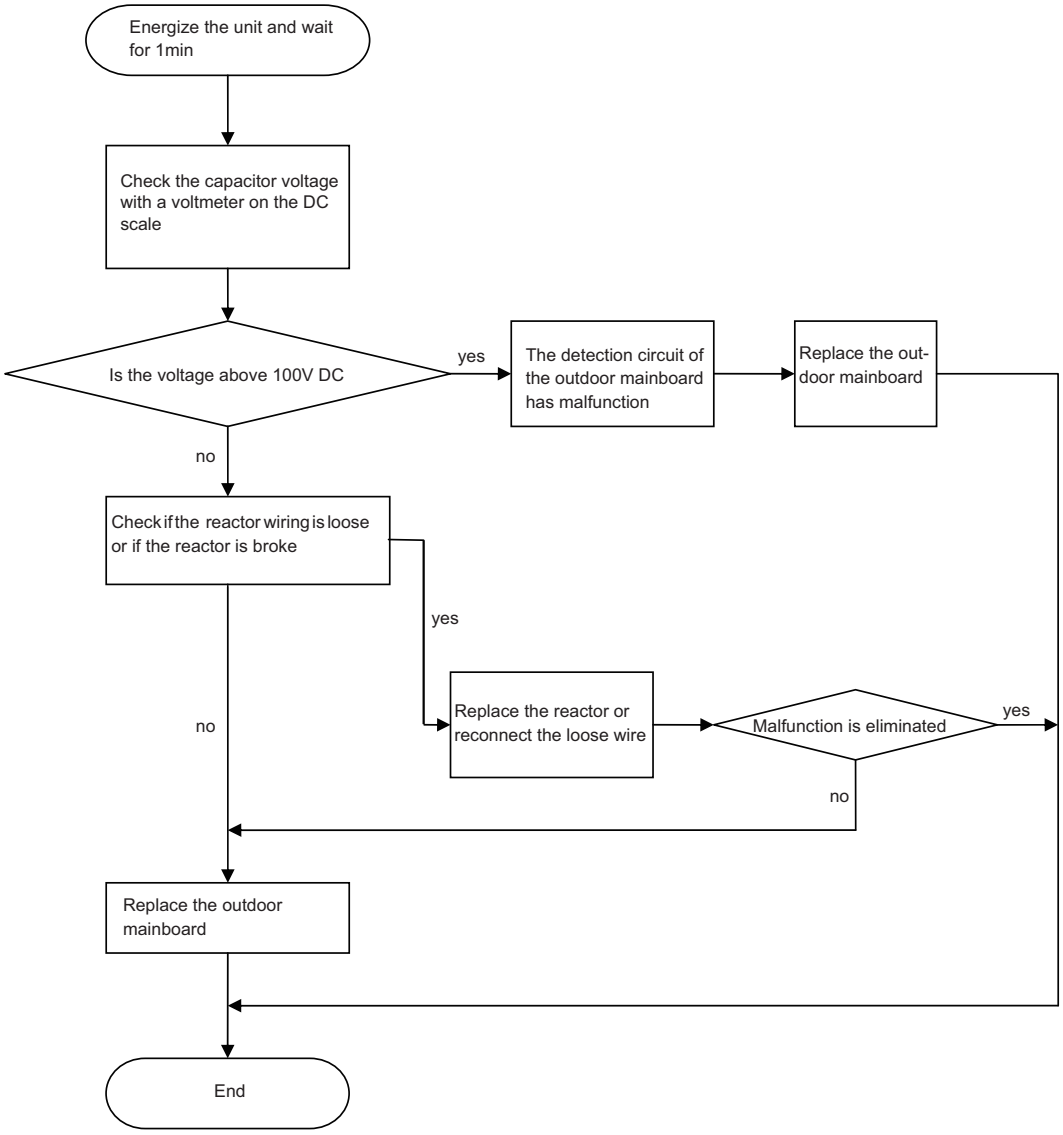

(4) Anti-high temperature and overload malfunction

Main checking points:

- Is the outdoor ambient temperature above the operating limit ;
- Is the outdoor fan running normally;
- Are the indoor and outdoor heat exchangers dirty or blocked;

Flow chart:

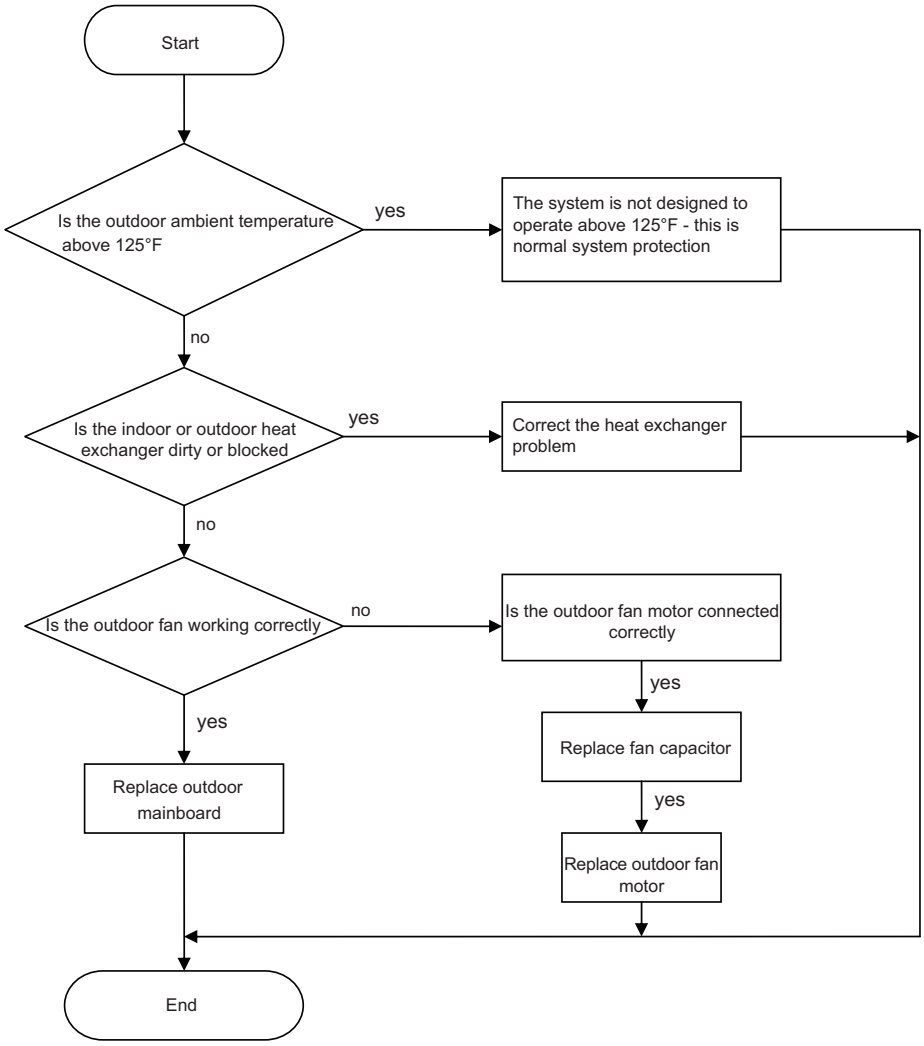

(5) Temperature sensor malfunction

Main checking points:

- Is the temperature sensor damaged or mis-wired
- Is the terminal of the temperature sensor loose or not connected correctly;
- Is the mainboard broken ;

Flow chart:

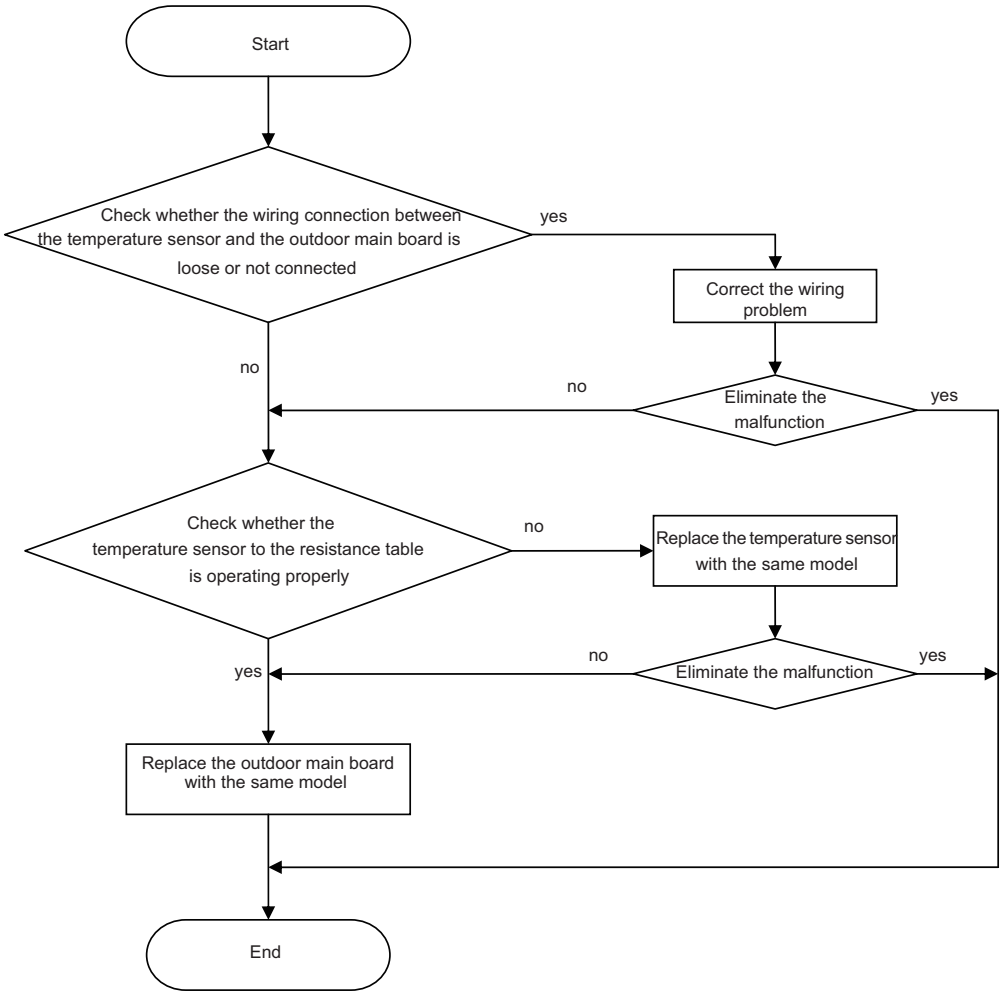

(6) Start failure malfunction

Main checking points:

- Is the compressor connected properly
- Is the stop duration of the compressor is correct
- Is the compressor broken
- Is the refrigerant charge amount too great;

Flow chart:

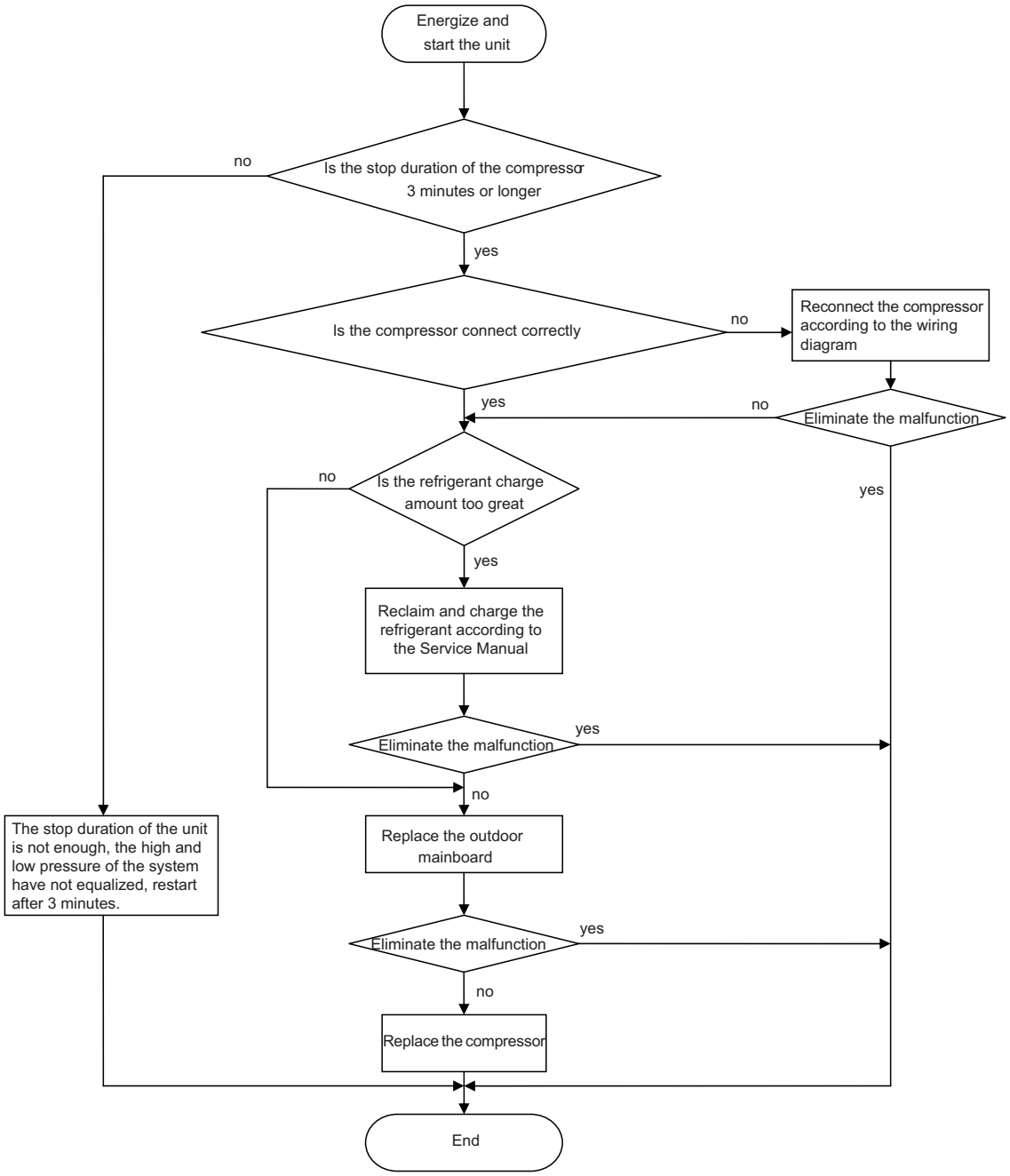

(7) Communication malfunction

Main checking points:

- Is the connection wire between the indoor unit and outdoor unit connected correctly at both ends
- Is the indoor mainboard or outdoor main board broken

Flow chart:

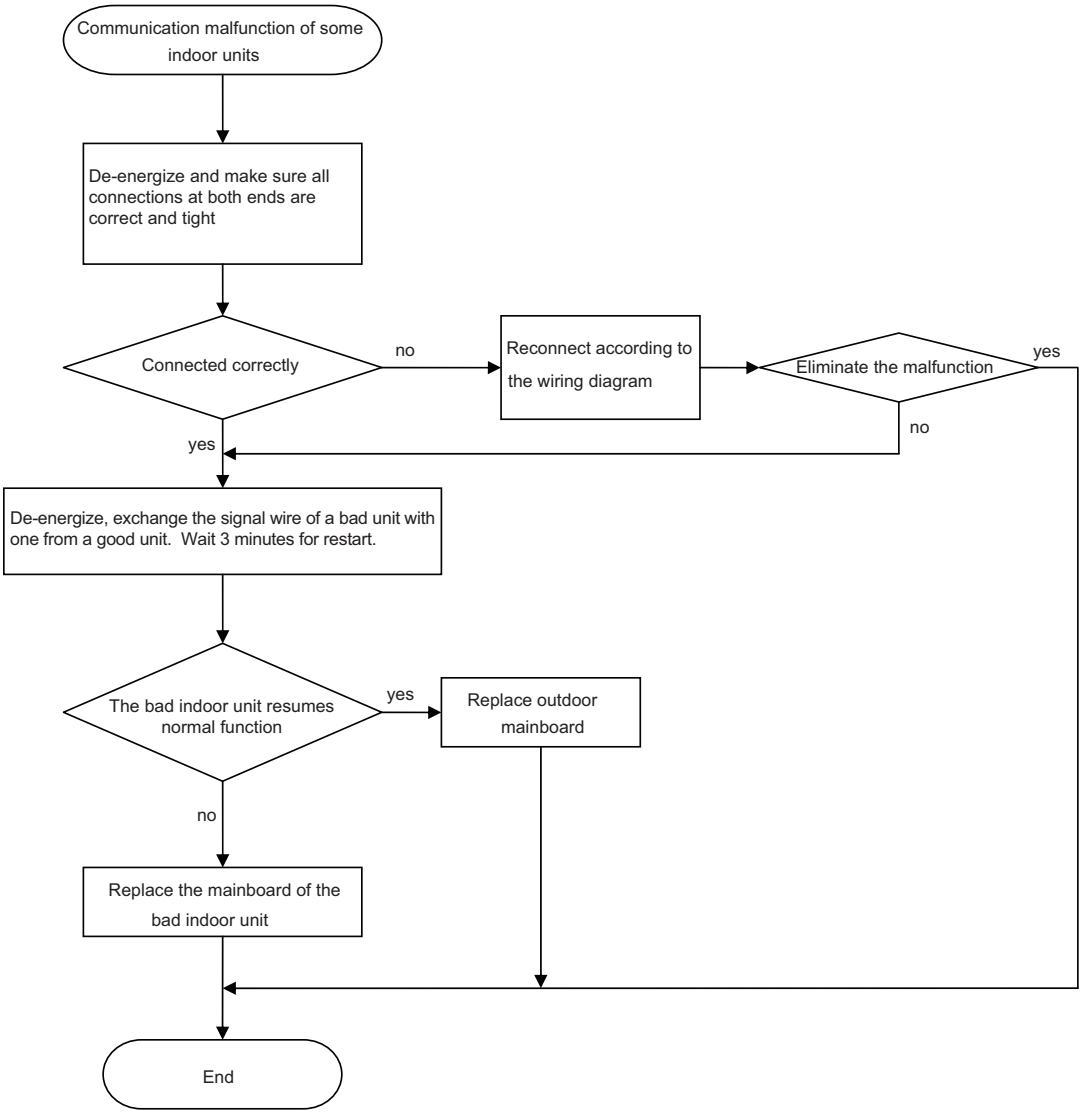

TROUBLESHOOTING CONTINUED

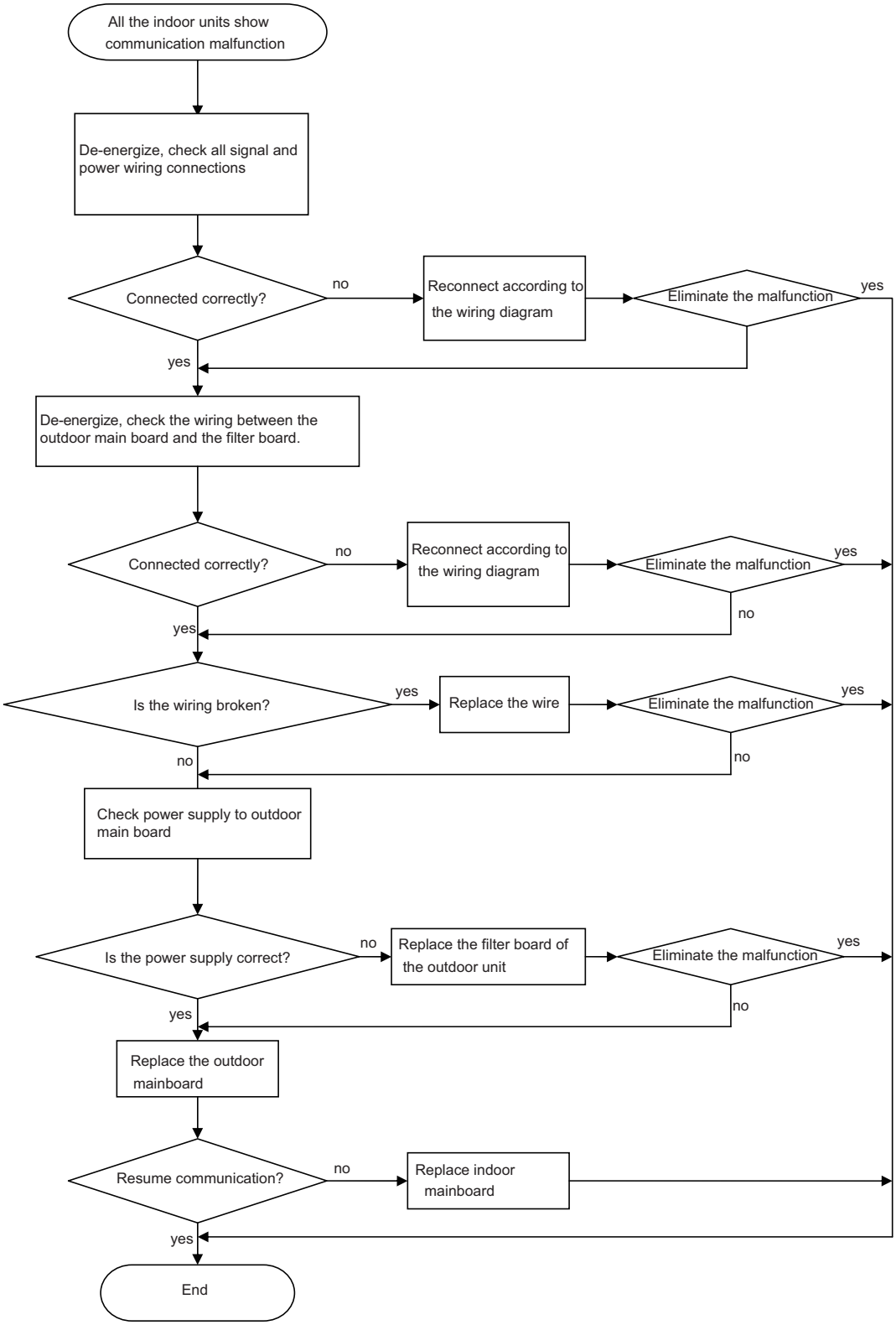

(8) Compressor overload, diacharge protection malfunction

Main checking points:

- Is the eletronic expansion valve connected correctly or broken
- Is there a refrigerant leak
- Is the overload protector broken

Flow chart:

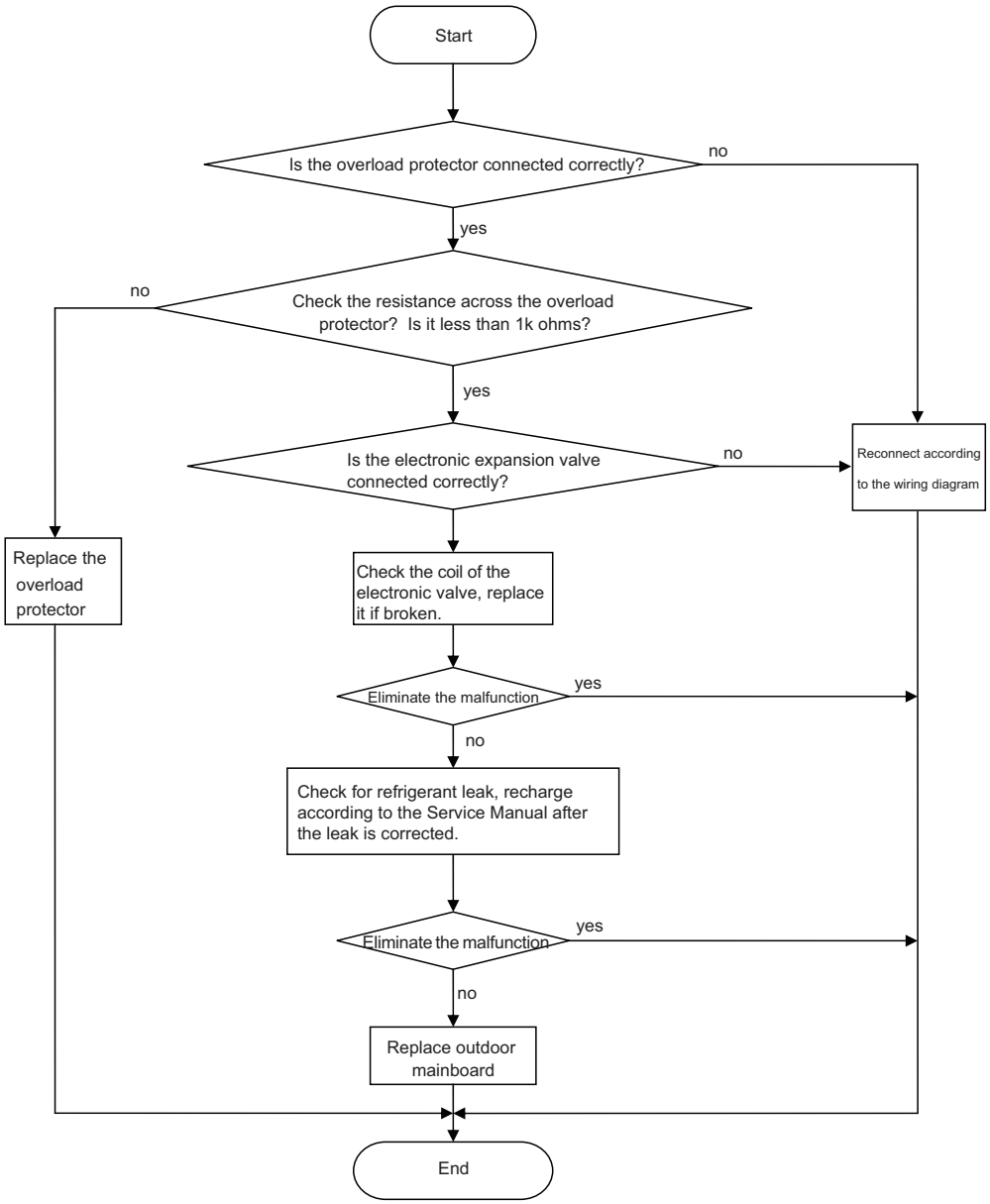

Note: All 5 segments of the electronic expansion coil should measure within 100 ohm.

(9) Compressor desynchronizing malfunction

Main checking points:

- Is the system pressure too high
- Is the eletronic expansion valve working correctly or is it broken;
- Are the system heat exchangers functioning correctly

Flow chart:

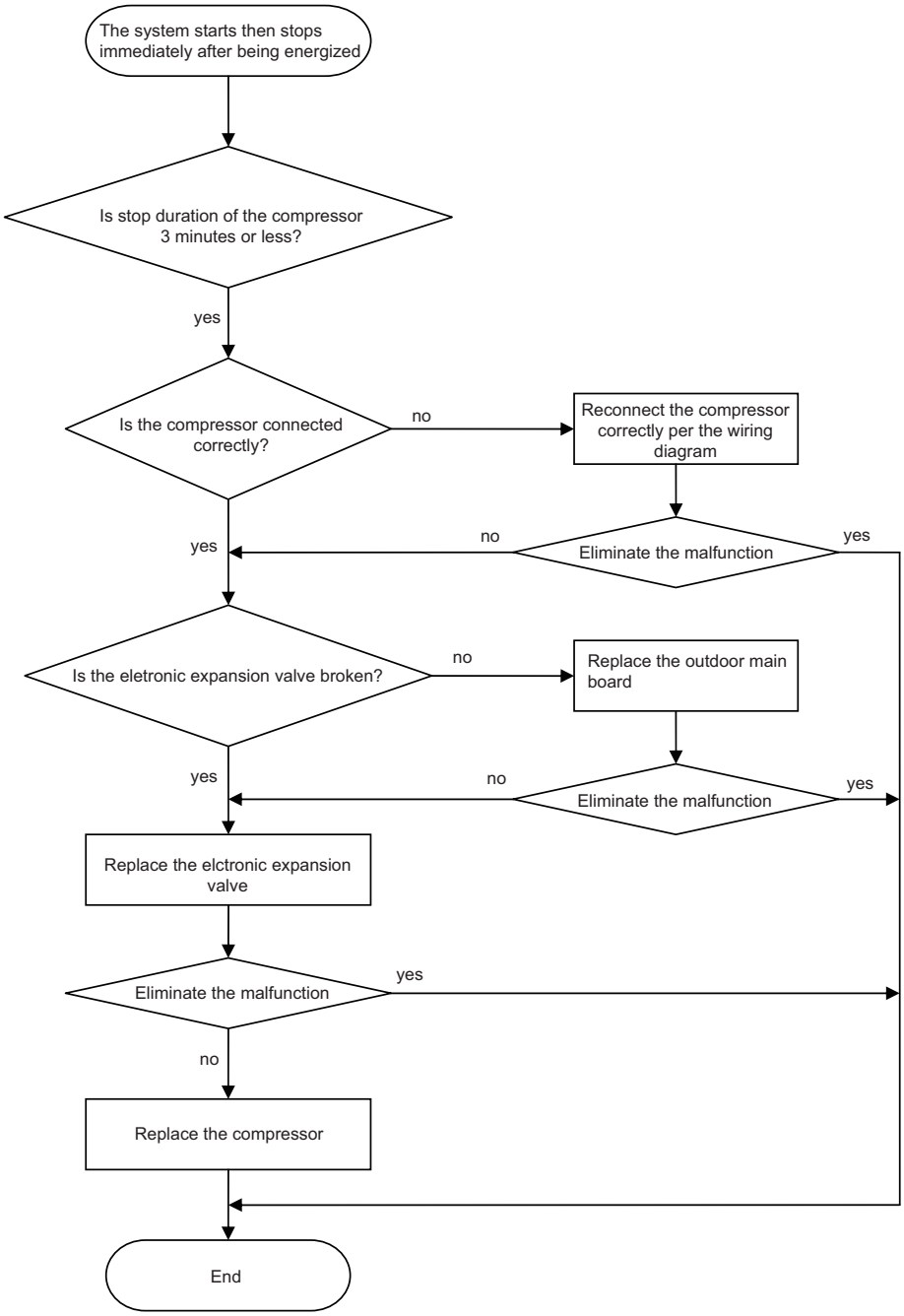

TROUBLESHOOTING CONTINUED

Appendix 1: Resistance Table of Ambient Temperature Sensor for Indoor and Outdoor Units (15K)

TEMP (°C)	Resistance(kΩ)		TEMP (°C)	Resistance(kΩ)		TEMP (°C)	Resistance(kΩ)		TEMP (°C)	Resistance(kΩ)
-19	138.1		20	18.75		59	3.848		98	1.071
-18	128.6		21	17.93		60	3.711		99	1.039
-17	121.6		22	17.14		61	3.579		100	1.009
-16	115		23	16.39		62	3.454		101	0.98
-15	108.7		24	15.68		63	3.333		102	0.952
-14	102.9		25	15		64	3.217		103	0.925
-13	97.4		26	14.36		65	3.105		104	0.898
-12	92.22		27	13.74		66	2.998		105	0.873
-11	87.35		28	13.16		67	2.896		106	0.848
-10	82.75		29	12.6		68	2.797		107	0.825
-9	78.43		30	12.07		69	2.702		108	0.802
-8	74.35		31	11.57		70	2.611		109	0.779
-7	70.5		32	11.09		71	2.523		110	0.758
-6	66.88		33	10.63		72	2.439		111	0.737
-5	63.46		34	10.2		73	2.358		112	0.717
-4	60.23		35	9.779		74	2.28		113	0.697
-3	57.18		36	9.382		75	2.206		114	0.678
-2	54.31		37	9.003		76	2.133		115	0.66
-1	51.59		38	8.642		77	2.064		116	0.642
0	49.02		39	8.297		78	1.997		117	0.625
1	46.6		40	7.967		79	1.933		118	0.608
2	44.31		41	7.653		80	1.871		119	0.592
3	42.14		42	7.352		81	1.811		120	0.577
4	40.09		43	7.065		82	1.754		121	0.561
5	38.15		44	6.791		83	1.699		122	0.547
6	36.32		45	6.529		84	1.645		123	0.532
7	34.58		46	6.278		85	1.594		124	0.519
8	32.94		47	6.038		86	1.544		125	0.505
9	31.38		48	5.809		87	1.497		126	0.492
10	29.9		49	5.589		88	1.451		127	0.48
11	28.51		50	5.379		89	1.408		128	0.467
12	27.18		51	5.197		90	1.363		129	0.456
13	25.92		52	4.986		91	1.322		130	0.444
14	24.73		53	4.802		92	1.282		131	0.433
15	23.6		54	4.625		93	1.244		132	0.422
16	22.53		55	4.456		94	1.207		133	0.412
17	21.51		56	4.294		95	1.171		134	0.401
18	20.54		57	4.139		96	1.136		135	0.391
19	19.63		58	3.99		97	1.103		136	0.382

TROUBLESHOOTING CONTINUED

Appendix 2: Resistance Table of Outdoor and Indoor Tube Temperature Sensors (20K)

TEMP (°C)	Resistance(kΩ)		TEMP (°C)	Resistance(kΩ)		TEMP (°C)	Resistance(kΩ)		TEMP (°C)	Resistance(kΩ)
-19	181.4		20	25.01		59	5.13		98	1.427
-18	171.4		21	23.9		60	4.948		99	1.386
-17	162.1		22	22.85		61	4.773		100	1.346
-16	153.3		23	21.85		62	4.605		101	1.307
-15	145		24	20.9		63	4.443		102	1.269
-14	137.2		25	20		64	4.289		103	1.233
-13	129.9		26	19.14		65	4.14		104	1.198
-12	123		27	18.13		66	3.998		105	1.164
-11	116.5		28	17.55		67	3.861		106	1.131
-10	110.3		29	16.8		68	3.729		107	1.099
-9	104.6		30	16.1		69	3.603		108	1.069
-8	99.13		31	15.43		70	3.481		109	1.039
-7	94		32	14.79		71	3.364		110	1.01
-6	89.17		33	14.18		72	3.252		111	0.983
-5	84.61		34	13.59		73	3.144		112	0.956
-4	80.31		35	13.04		74	3.04		113	0.93
-3	76.24		36	12.51		75	2.94		114	0.904
-2	72.41		37	12		76	2.844		115	0.88
-1	68.79		38	11.52		77	2.752		116	0.856
0	65.37		39	11.06		78	2.663		117	0.833
1	62.13		40	10.62		79	2.577		118	0.811
2	59.08		41	10.2		80	2.495		119	0.77
3	56.19		42	9.803		81	2.415		120	0.769
4	53.46		43	9.42		82	2.339		121	0.746
5	50.87		44	9.054		83	2.265		122	0.729
6	48.42		45	8.705		84	2.194		123	0.71
7	46.11		46	8.37		85	2.125		124	0.692
8	43.92		47	8.051		86	2.059		125	0.674
9	41.84		48	7.745		87	1.996		126	0.658
10	39.87		49	7.453		88	1.934		127	0.64
11	38.01		50	7.173		89	1.875		128	0.623
12	36.24		51	6.905		90	1.818		129	0.607
13	34.57		52	6.648		91	1.736		130	0.592
14	32.98		53	6.403		92	1.71		131	0.577
15	31.47		54	6.167		93	1.658		132	0.563
16	30.04		55	5.942		94	1.609		133	0.549
17	28.68		56	5.726		95	1.561		134	0.535
18	27.39		57	5.519		96	1.515		135	0.521
19	26.17		58	5.32		97	1.47		136	0.509

TROUBLESHOOTING CONTINUED

Appendix 3: Resistance Table for Outdoor Discharge Temperature Sensor (50K)

TEMP (°C)	Resistance(kΩ)		TEMP (°C)	Resistance(kΩ)		TEMP (°C)	Resistance(kΩ)		TEMP (°C)	Resistance(kΩ)
-29	853.5		10	98		49	18.34		88	4.75
-28	799.8		11	93.42		50	17.65		89	4.61
-27	750		12	89.07		51	16.99		90	4.47
-26	703.8		13	84.95		52	16.36		91	4.33
-25	660.8		14	81.05		53	15.75		92	4.20
-24	620.8		15	77.35		54	15.17		93	4.08
-23	580.6		16	73.83		55	14.62		94	3.96
-22	548.9		17	70.5		56	14.09		95	3.84
-21	516.6		18	67.34		57	13.58		96	3.73
-20	486.5		19	64.33		58	13.09		97	3.62
-19	458.3		20	61.48		59	12.62		98	3.51
-18	432		21	58.77		60	12.17		99	3.41
-17	407.4		22	56.19		61	11.74		100	3.32
-16	384.5		23	53.74		62	11.32		101	3.22
-15	362.9		24	51.41		63	10.93		102	3.13
-14	342.8		25	49.19		64	10.54		103	3.04
-13	323.9		26	47.08		65	10.18		104	2.96
-12	306.2		27	45.07		66	9.83		105	2.87
-11	289.6		28	43.16		67	9.49		106	2.79
-10	274		29	41.34		68	9.17		107	2.72
-9	259.3		30	39.61		69	8.85		108	2.64
-8	245.6		31	37.96		70	8.56		109	2.57
-7	232.6		32	36.38		71	8.27		110	2.50
-6	220.5		33	34.88		72	7.99		111	2.43
-5	209		34	33.45		73	7.73		112	2.37
-4	198.3		35	32.09		74	7.47		113	2.30
-3	199.1		36	30.79		75	7.22		114	2.24
-2	178.5		37	29.54		76	7.00		115	2.18
-1	169.5		38	28.36		77	6.76		116	2.12
0	161		39	27.23		78	6.54		117	2.07
1	153		40	26.15		79	6.33		118	2.02
2	145.4		41	25.11		80	6.13		119	1.96
3	138.3		42	24.13		81	5.93		120	1.91
4	131.5		43	23.19		82	5.75		121	1.86
5	125.1		44	22.29		83	5.57		122	1.82
6	119.1		45	21.43		84	5.39		123	1.77
7	113.4		46	20.6		85	5.22		124	1.73
8	108		47	19.81		86	5.06		125	1.68
9	102.8		48	19.06		87	4.90		126	1.64

NOTE: The information above is for reference only.

REMOVAL PROCEDURE OF OUTDOOR UNIT - 18K

Steps	Procedure
1. Remove top cover and wiring cover	
1	Before disassembly
2	Remove screws retaining the wiring cover, lift the cover upward to remove it.
3	Remove screws retaining the top cover, lift the top cover upward to remove it.

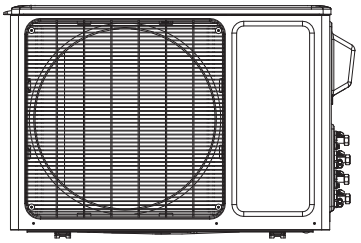

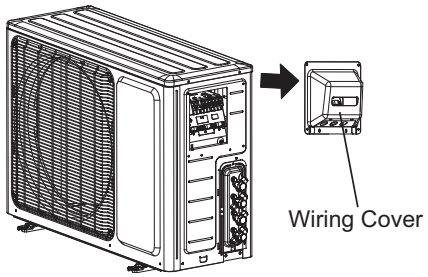

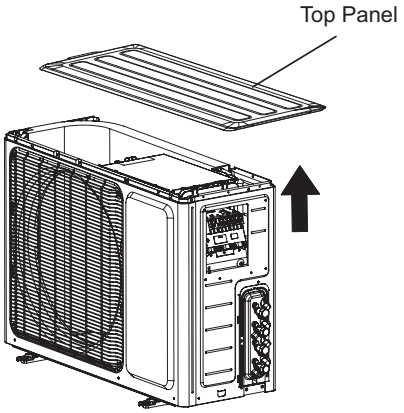

Steps	Procedure
2.Remove front grille and front panel	
1	Remove the screws retaining the front grille to the front panel. Remove the front grille.
2	Remove the screws retaining the panel, lift it upward to loosen the clasp on the right side, rotate it to the left and then remove the front panel.
3.Remove right and left side panels	
1	Remove the screws retaining the right side panel to the chassis, the valve support and the electric box, then remove the right side panel.
2	Remove the screws retaining the left side panel to the chassis, then remove the left side panel.

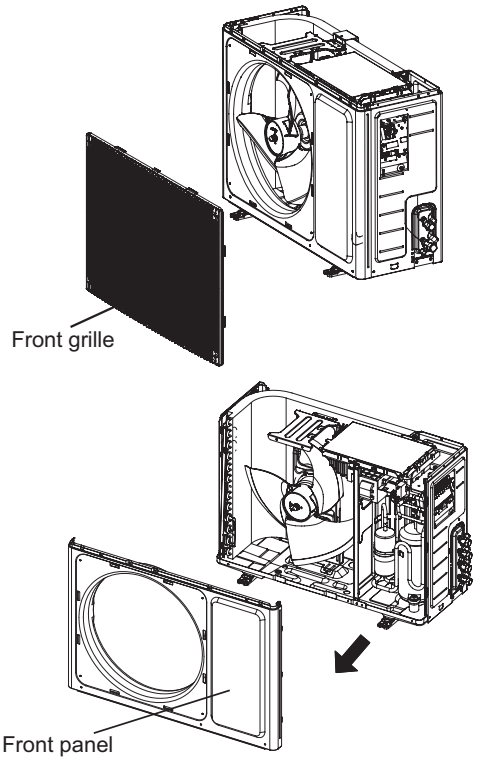

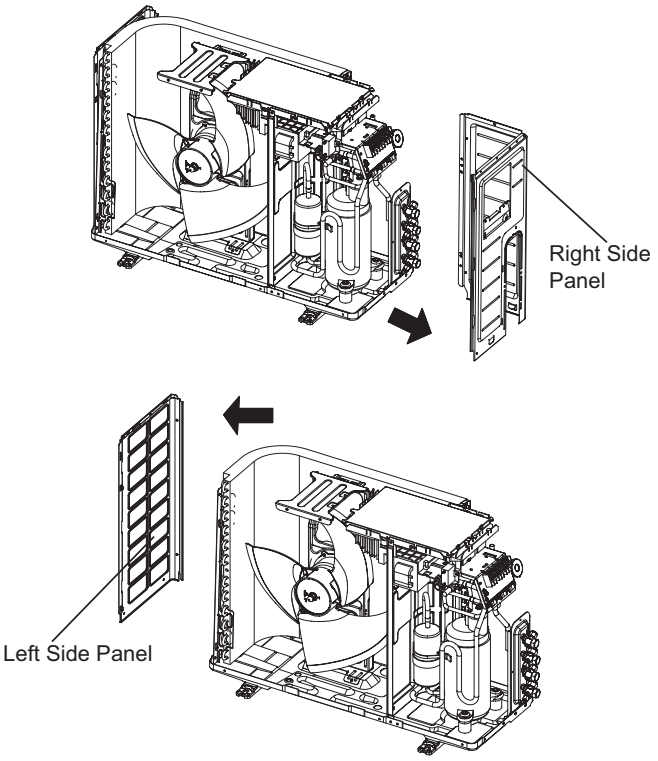

Steps	Procedure
4.Remove the fan blade	
1	Remove the nut retaining the blade to the motor shaft, then remove the fan blade.
2	Remove the four (4) screws retaining the motor; disconnect the motor wiring, then remove the motor. Remove the two (2) screws retaining the motor support; then lift the motor support upwards to remove it.
5.Remove control box assembly	
	Remove the screws retaining the control box sub-assembly; loosen the wire bundle; remove the wiring terminals and then lift the control box upwards to remove it.

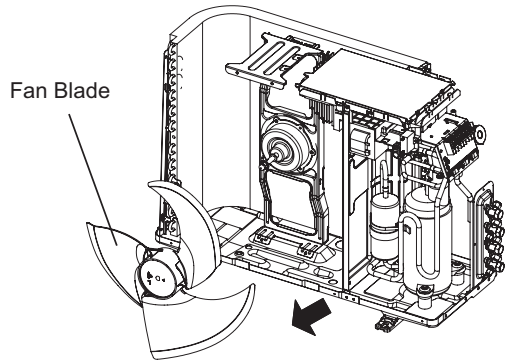

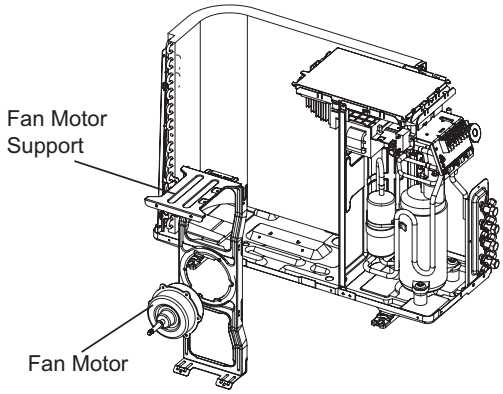

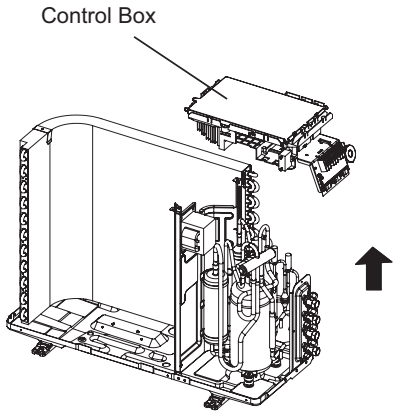

Steps	Procedure
6. Remove sound shield	
Carefully remove the sound shield from around the compressor.	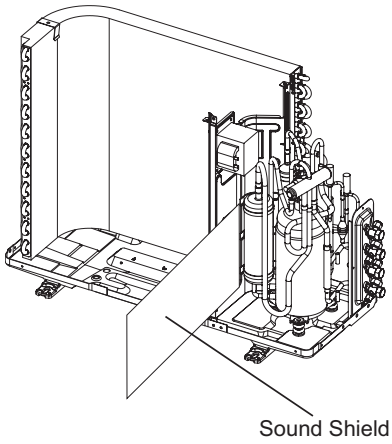
7. Remove reactor	
Remove screws holding the reactor to the compressor partition; then remove the reactor.	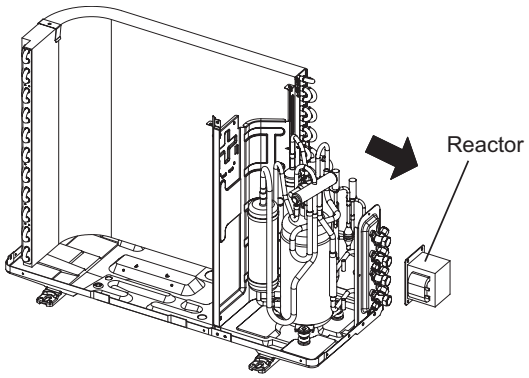
8. Remove 4-way valve	
Reclaim system refrigerant charge. Cut all lines connected to 4-way valve; disconnect solenoid coil wiring and remove 4-way valve from unit.	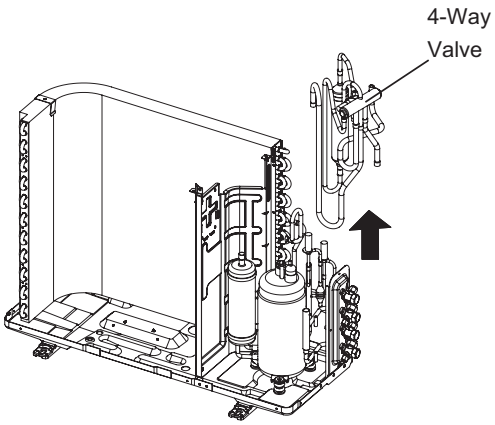

Steps	Procedure
9. Remove electronic expansion valves and shut-off valves	
Remove the solenoid coils from the electronic expansion vlaves. Cut all lines connecting the valves to the system and remove the valves.	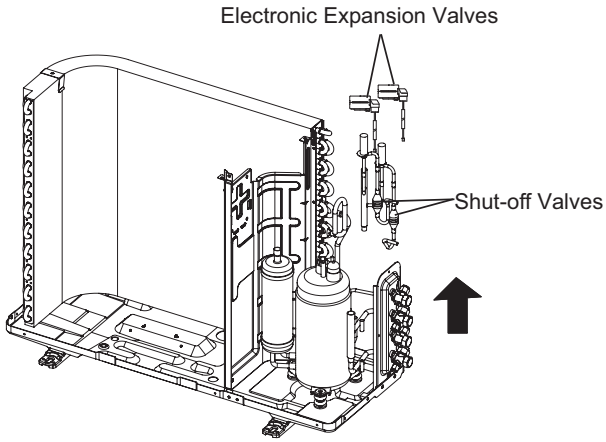
10. Remove the service valve support assembly	
Remove the screws retaining the valve support to the chassis; then remove the valve support assembly.	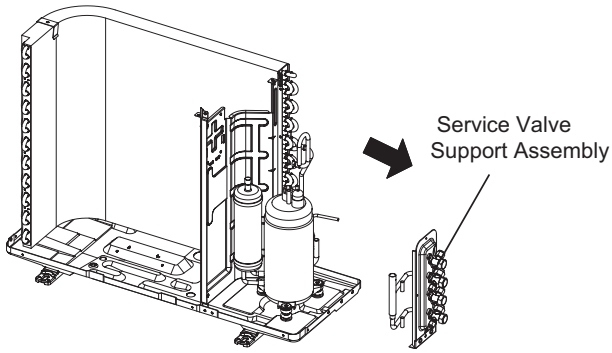
11. Remove compressor partition	
Remove screws retaining the partition and then remove the partition.	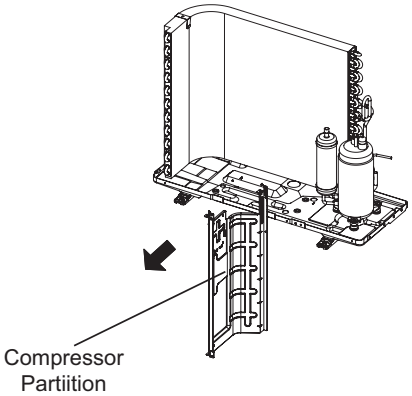

Steps	Procedure
12. Remove compressor	
	Remove three (3) nuts from compressor mounting bolts, then lift compressor from base pan.
13. Remove condenser	
1	Remove the screws retaining the support and condenser assembly. Then remove the support.
2	Remove the condenser from the base pan.

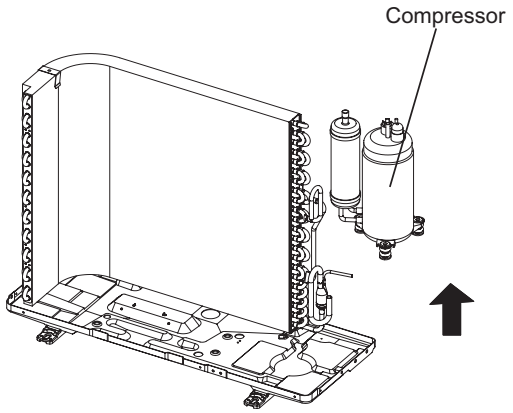

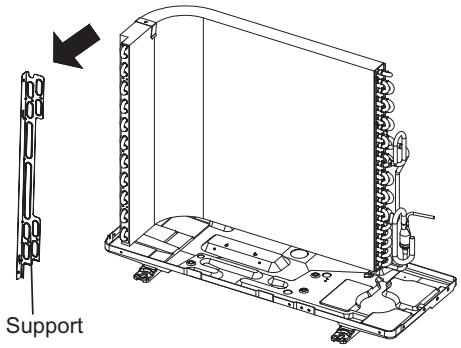

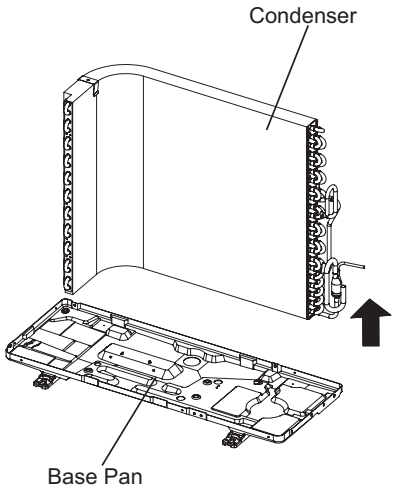

REMOVAL PROCEDURE OF OUTDOOR UNIT - 24K / 30K

Steps	Procedure	
1.Remove wiring connection cover and conduit connection plate		
	Before disassembly	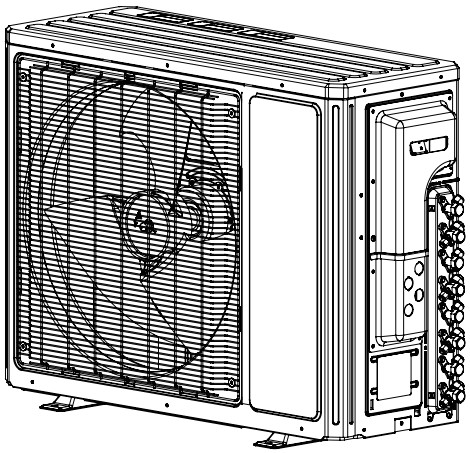
	Remove the screws retaining the wiring connection cover to the right side panel and remove cover.	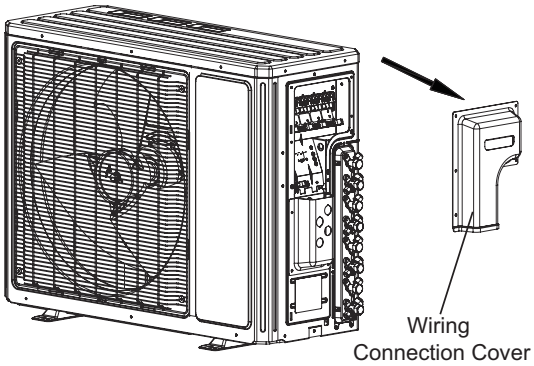
	Remove the screws retaining the conduit connection plate to the right side panel and remove the plate.	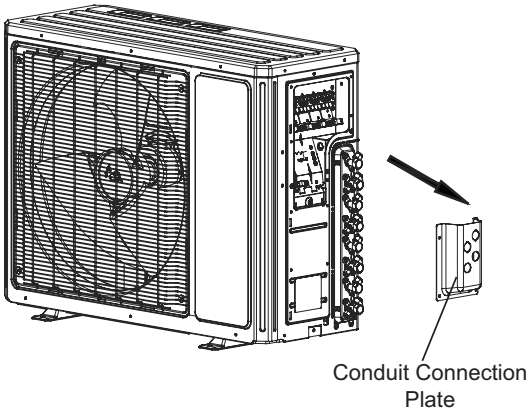

Steps	Procedure
8.Remove condenser support	
	Remove the screws retaining the condenser support to the base pan and remove the condenser support.
9.Remove fan blade	
	Remove the nut retaining the fan blade to the fan motor shaft and remove the fan blade.
10.Remove motor and motor support	
	Disconnect the fan motor wiring and remove the screws retaining the motor. Remove the motor. Remove the screws retaining the motor support to the base pan and remove the support.

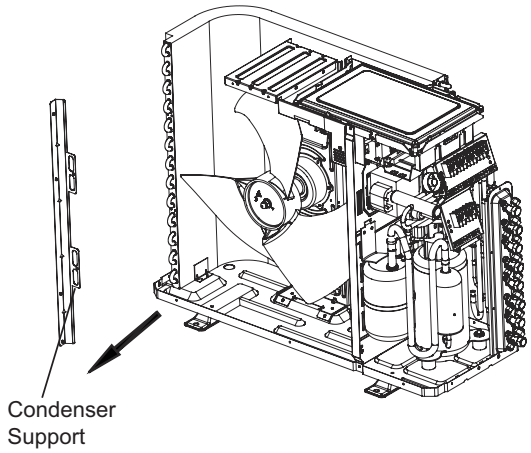

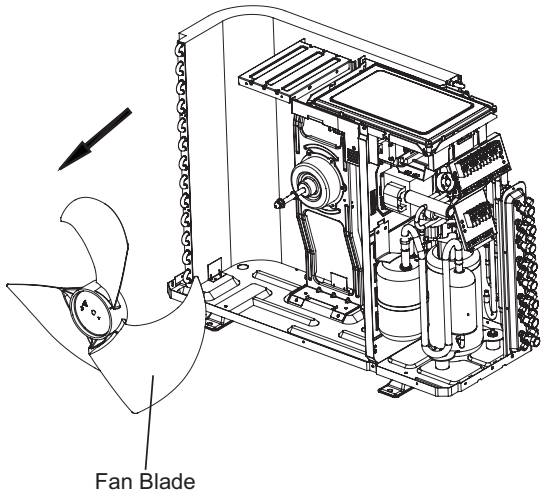

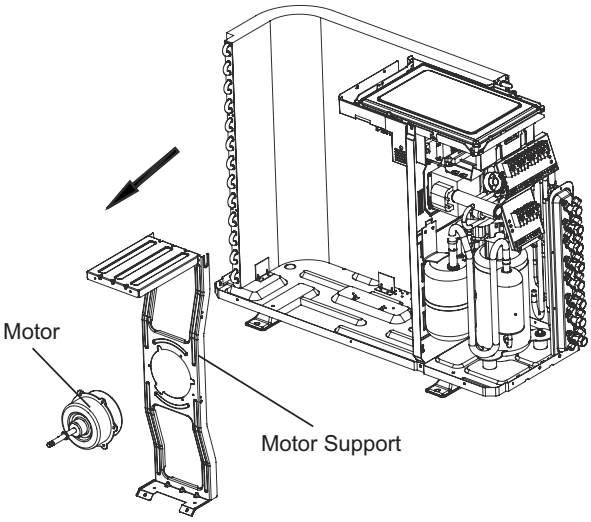

Steps	Procedure
11.Remove control box assembly	
Disconnect all wiring, remove screws retaining control box to compressor partition and lift control box out of unit.	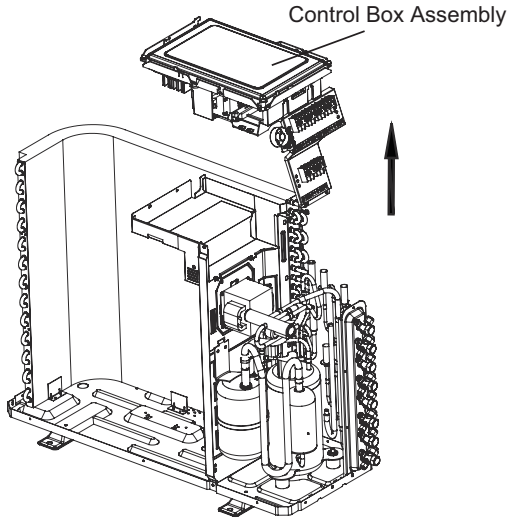
12.Remove reactor	
Remove the screws retaining the reactor to the compressor partition and remove the reactor.	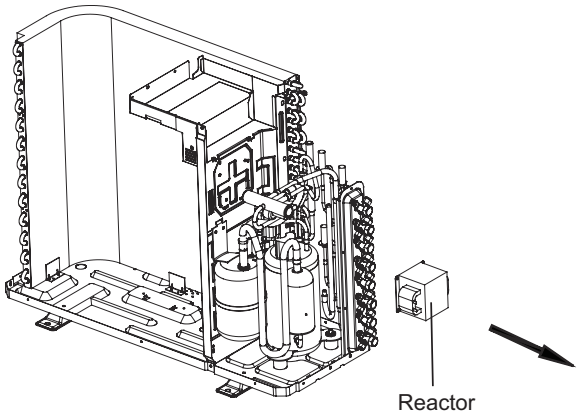
13.Remove 4-way valve	
Reclaim all refrigerant charg in system. Cut all line connections to 4-way valve and remove from unit.	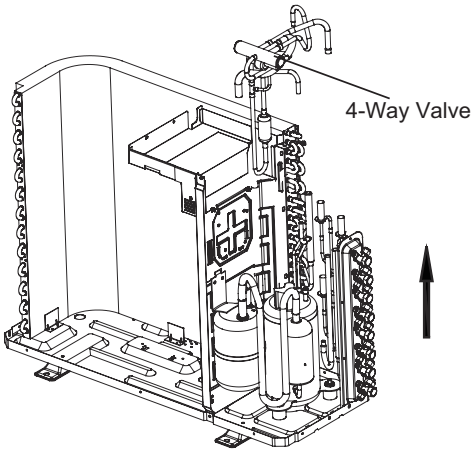

Steps	Procedure
14.Remove suction pipe assembly	
Cut the suction pipe at the receiver and the compressor. Remove suction pipe from unit.	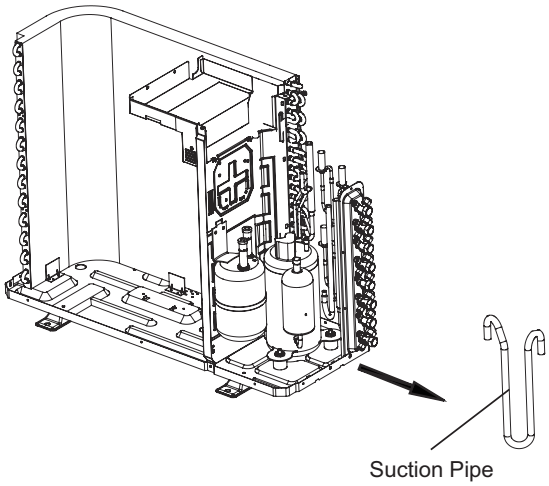
15.Remove liquid receiver	
Remove the screws retaining the liquid receiver to the compressor partition and remove the reciever from the unit.	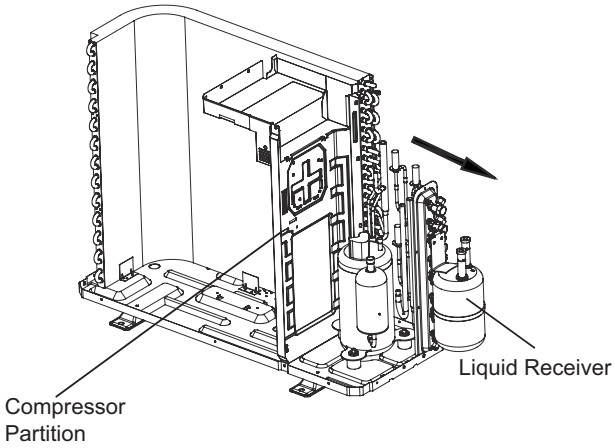
16.Remove the compressor partition	
Remove the screws retaining the compressor partition to the condenser tube sheet and the base pan. Remove partition.	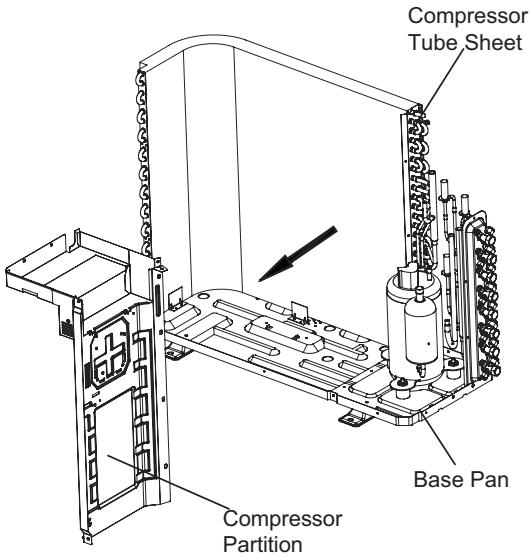

Steps	Procedure
17.Remove compressor	
Remove nuts from compressor mounting bolts and lift compressor from base pan.	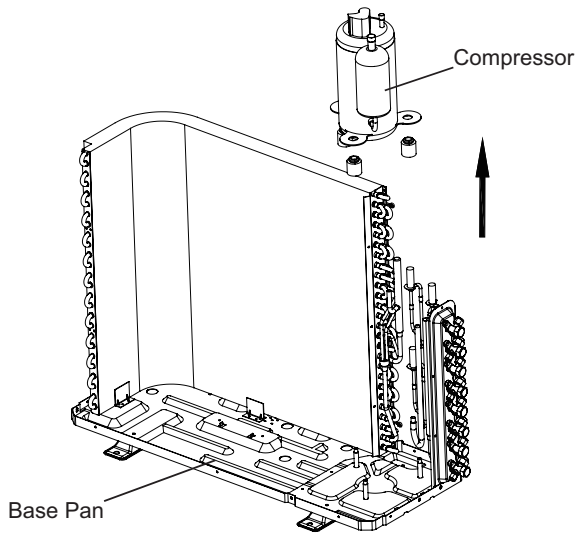
18.Remove service valve support	
Remove the screws retaining the service valve support to the base pan and remove the support.	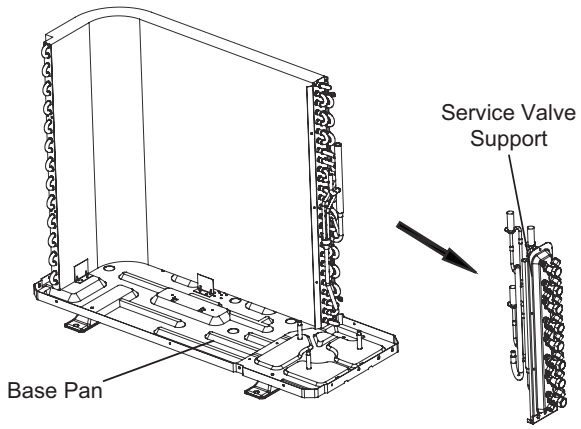
19.Remove electronic expansion valves	
Cut all lines to the electronic expansion valves and remove the valves from the service valve support.	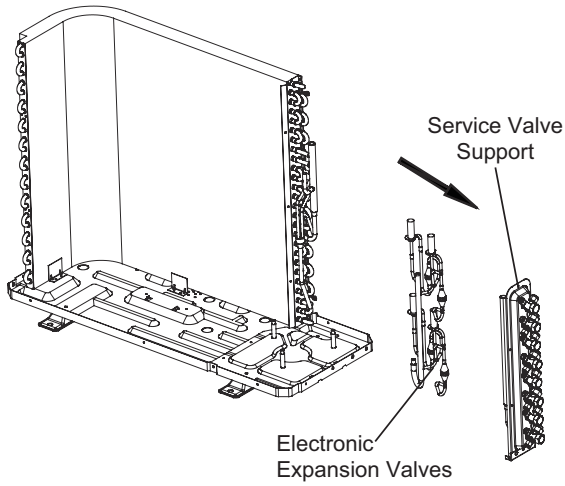

REMOVAL PROCEDURE OF OUTDOOR UNIT - 36K

Steps	Procedure	
1. Before disassembly		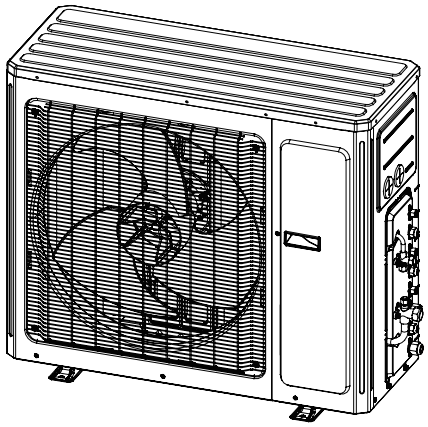
2.Remove top panel	Remove the 3 screws connecting the top panel with the front panel and the right side plate, and then remove the top panel.	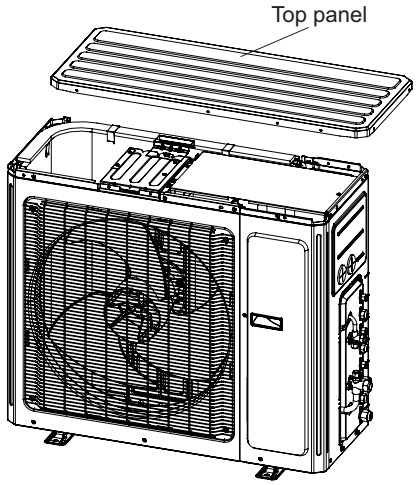
3.Remove front side plate	Remove the 1 screw connecting the front sideplate and the panel,and then remove the front side plate.	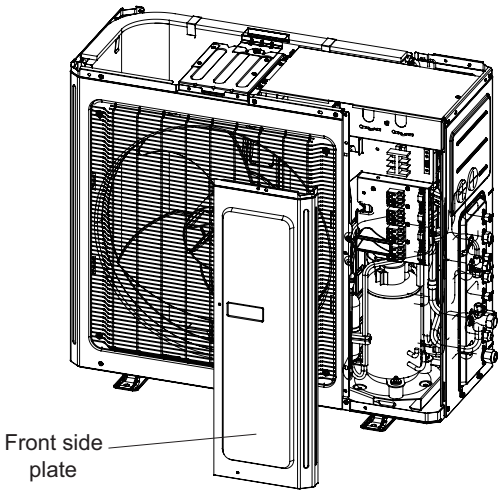

Steps	Procedure
4.Remove guard grille	
Remove the screws fixing guard grille and left side plate to remove guard grille.	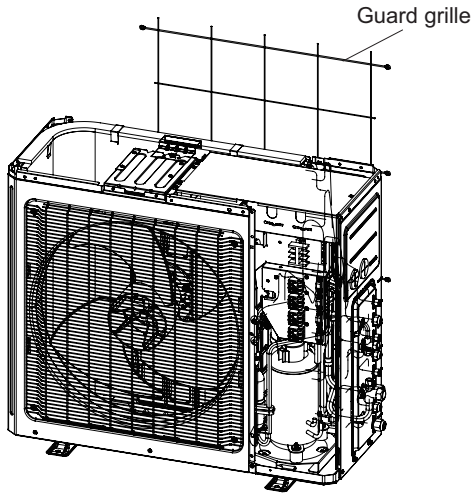
5. Remove right side plate	
Remove the screws connecting the right side plate with the chassis, the valve support and the electric box, and then remove the right side plate assy .	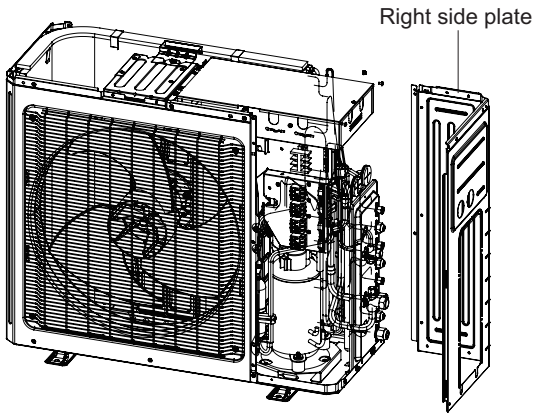
6. remove the grille	
Remove the 4 screws connecting the grille and the Cabinet, and then remove the grille.	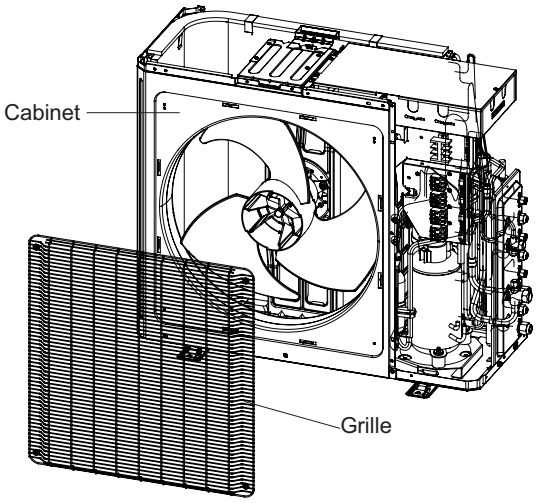

Steps	Procedure
7.Remove cabinet	
	Remove the screws connecting the panel with the chassis,the motor support and Clapboard Assy then remove the cabinet.
	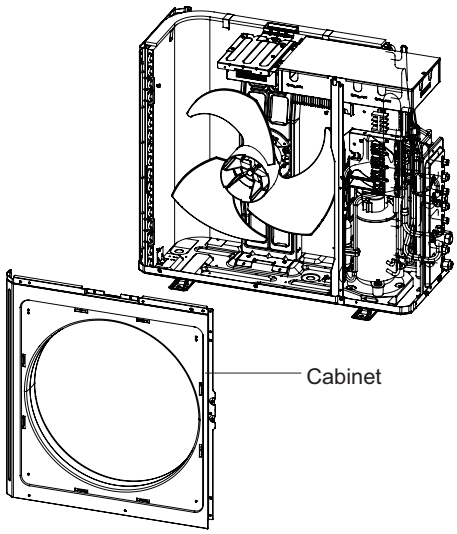
8.Remove control box assy	
	Remove the grounding wire screw on the control box assy and then remove the grounding wire. Disconnect the wiring terminals of reactor, compressor, high and low pressure switch, compressor overload protector, temperature sensor, outdoor fan motor and 4-way valve. Note: keep pressing the circlip when disconnecting the wiring terminal of reactor; keep pressing the retainer when disconnecting other wiring terminals. Remove the wire inside the wiring groove. Remove the 2 screws retaining the control box assy and then lift the control box assy upwards to remove it.
	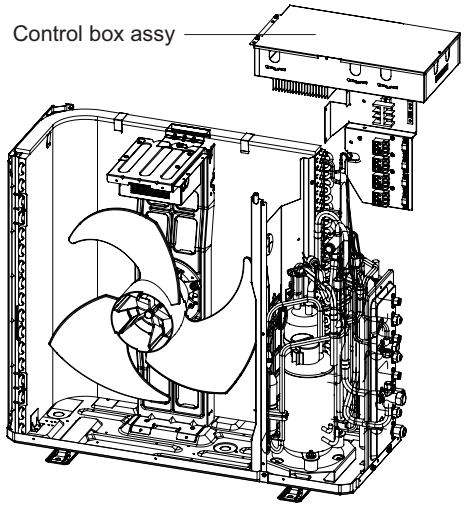
9.Remove fan blade, motor, motor support and reactor	
	Remove the nut retaining the fan blade and then remove the fan blade. Remove the screws retaining the motor and then remove the motor. Remove the screws retaining the motor support and then remove the motor support. Remove the 4 screws connecting the reactor and isolation plate, and then remove the reactor.
	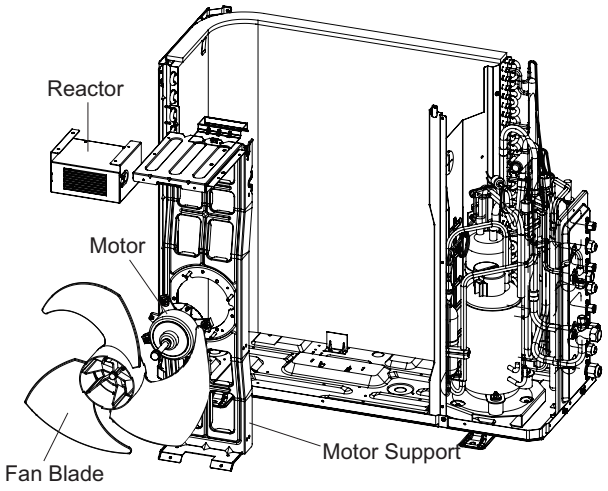

Steps	Procedure
10.Remove 4-way valve	
Reclaim all refrigerant charge in system. Cut all line connections to 4-way valve and remove from unit.	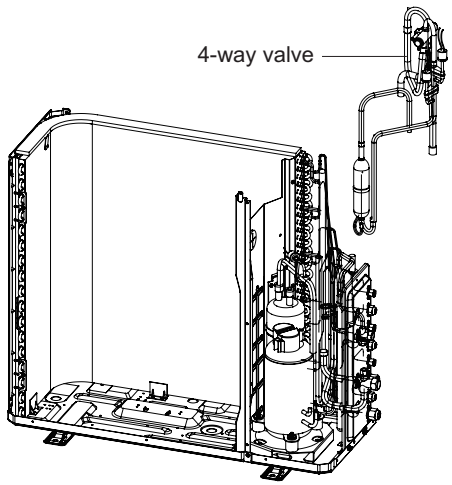
11.Remove Service Valve Support	
Reclaim all refrigerant charge in system. Cut all line connections to the service valve support; remove the 2 bolts retaining the liquid valve; remove the service valve support.	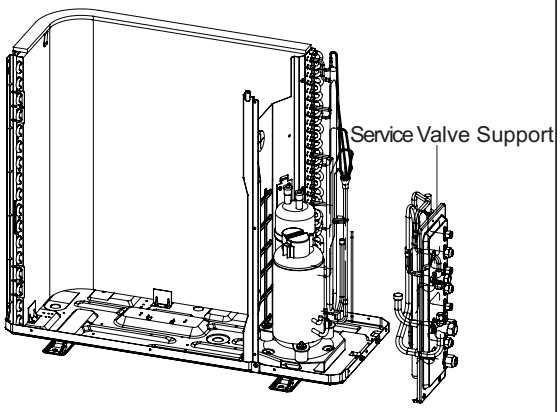
12.Remove Connection Pipe Sub-assy	
Cut all line connections to the connection pipe sub-assy; then remove connection pipe sub-assy.	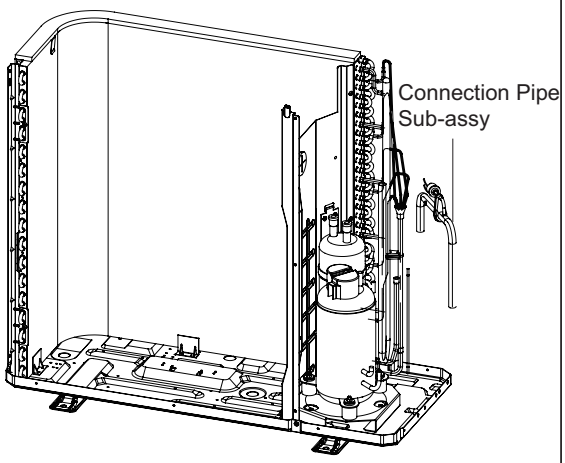

Steps	Procedure
13.Remove Gas-liquid Separator	
Unsolder the spot weld of Gas-liquid Separator, and Remove the screws connecting the Gas-liquid Separator and Clapboard Sub-Assy, then remove Gas-liquid Separator	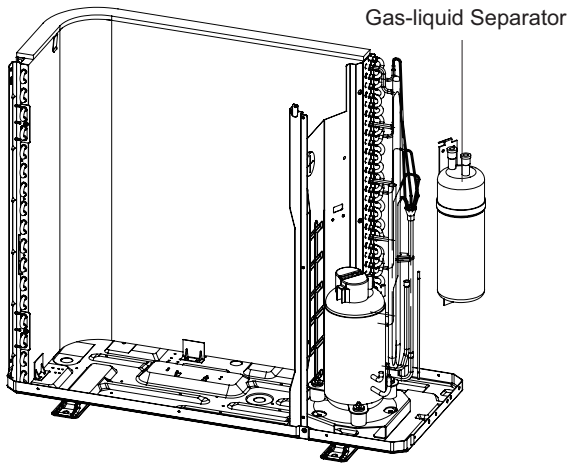
14.Remove Clapboard Sub-Assy	
Remove the screws connecting Clapboard Sub-Assy with the chassis, and Condenser Support Plate then remove the cabinet.	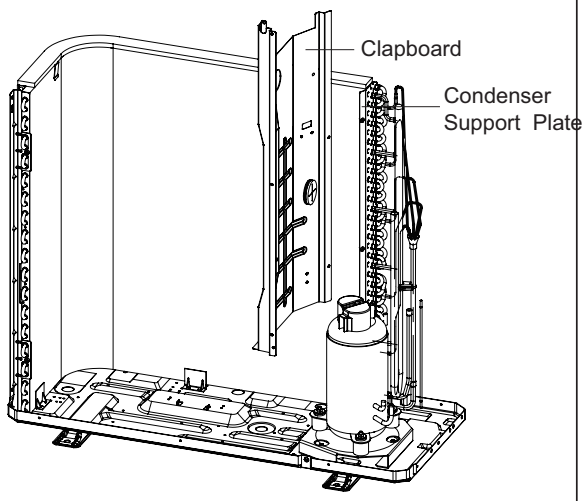
15.Remove left side plate assy	
Remove the screws connecting the left side plate and the chassis, then remove the left side plat assy.	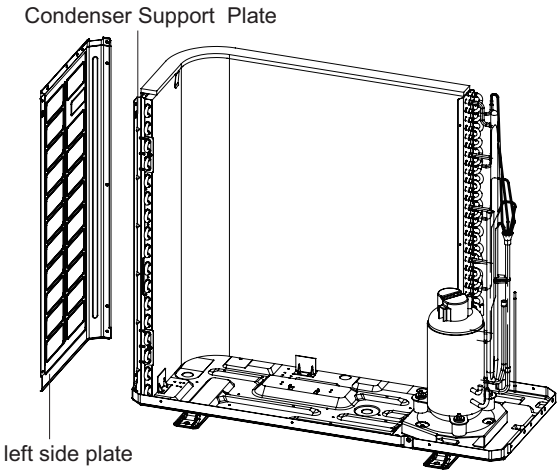

Steps	Procedure
16.Remove compressor	
Remove the 3 foot nuts fixing compressor and then lift the compressor upwards to remove the compressor. Note: Keep the ports of discharge pipe and suction pipe from foreign objects.	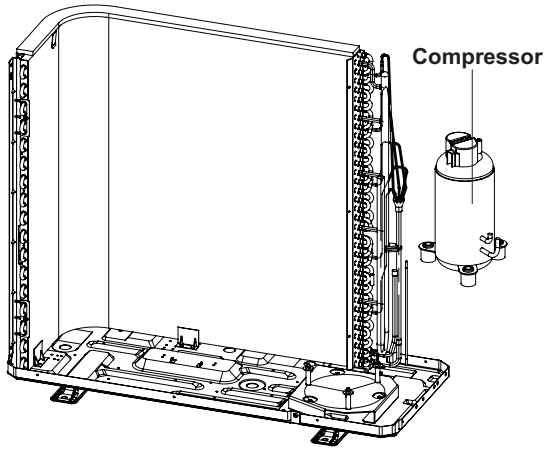
17.Remove condenser sub-assy	
Remove the screws retaining the condenser sub-assy and chassis, then lift the condenser sub-assy upwards to remove.	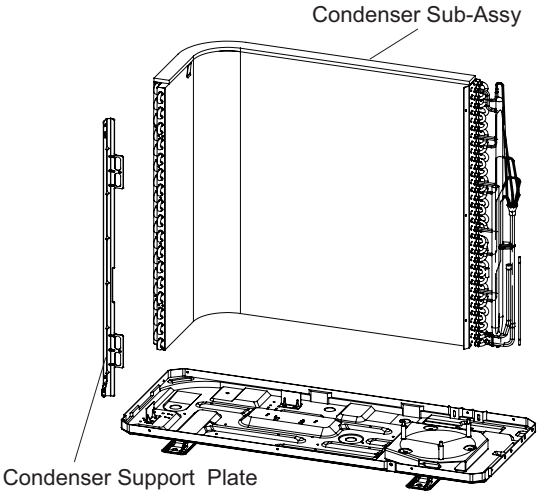
18.Remove Compressor Mounting Plate Sub-Assy	
Lift the Compressor Mounting Plate Sub-Assy upwards to remove it.	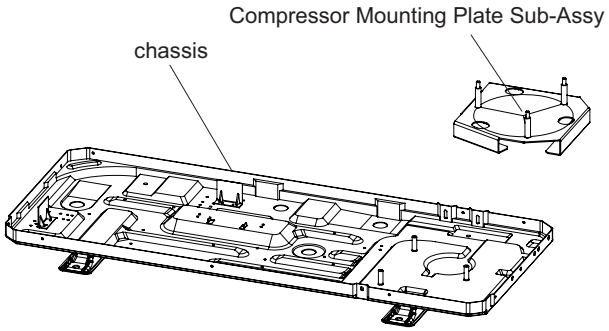

REMOVAL PROCEDURE OF OUTDOOR UNIT - 42K

Steps	Procedure	
1. Disassemble the cover plate		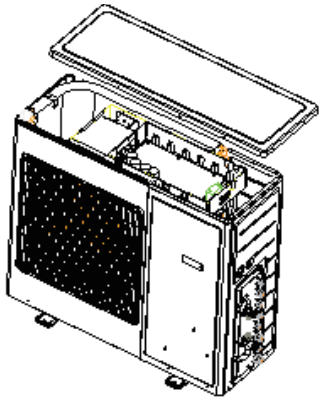
	① Remove the fixed screws on the cover plate by using a screwdriver. ② Remove the cover plate.	
2. Disassemble the front panel		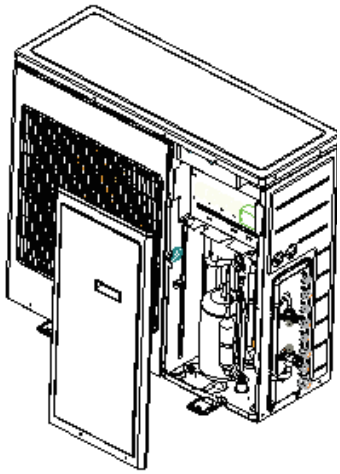
	① Remove the fixed screws on the front panel by using a screwdriver. ② Remove the front panel.	
3. Disassemble the panel on the right side		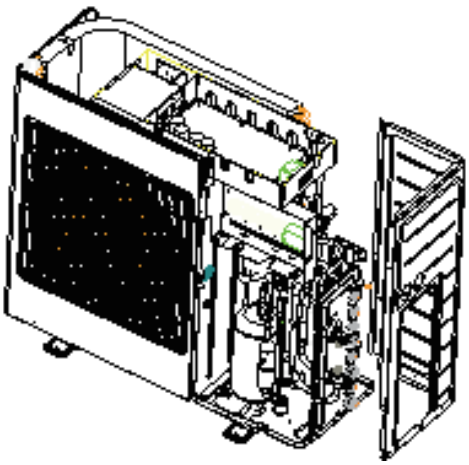
	① Remove the fixed screws on the panel by using a screwdriver. ② Remove the panel on the right side.	

Steps	Procedure	
4. Dismount the grille		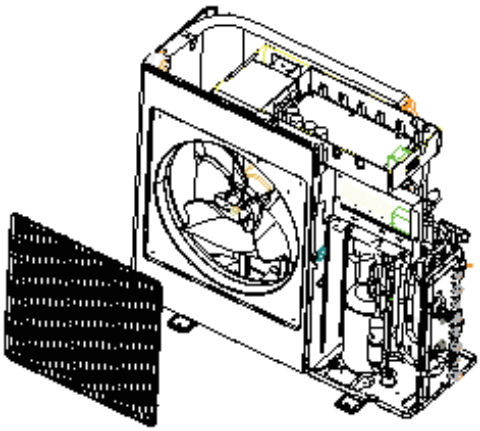
	① Remove the fixed screws on the grille by using a screwdriver. ② Remove the grille.	
5. Disassemble the outer casing		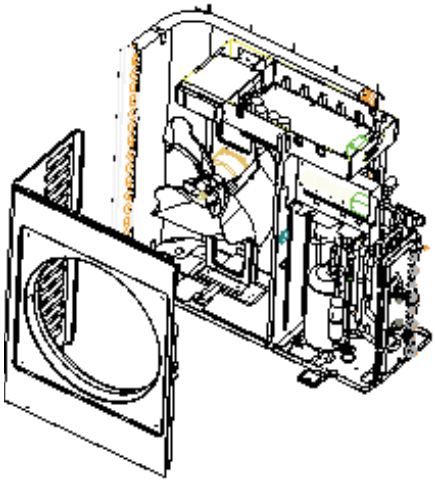
	① Remove the fixed screws on the outer casing by using a screwdriver. ② Remove the outer casing.	
6. Disassemble the fan blades		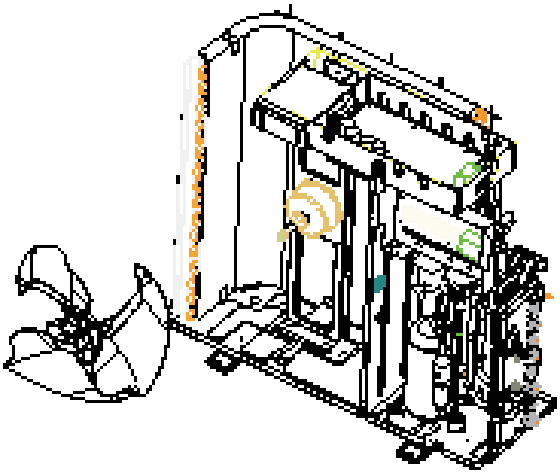
	① Remove the fixed screws on the fan blades by using a spanner. ② Remove the fan blades.	

Steps	Procedure
7. Assemble the disassembled main parts as per the reverse disassembly order mentioned above	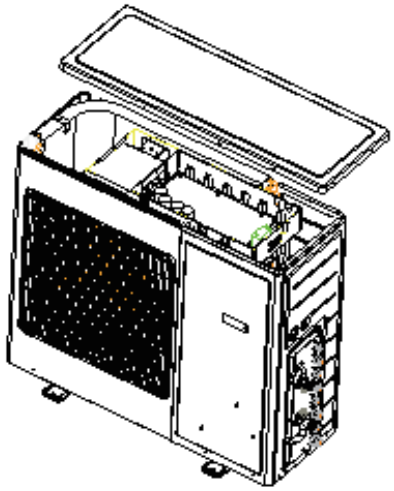
	Assemble the disassembled main parts as per the reverse disassembly order mentioned above and energize the unit for trial test.

Disassembly and Assembly of Compressor	
Remark: Make sure that there is no refrigerant in pipe system and the power supply is cut off before disassembling the compress or.	
Steps	**Procedure**
1. Disconnect the power cord	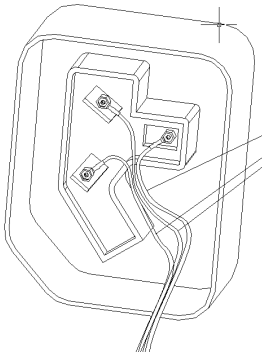 Note the color of each power cord and also the corresponding terminal
	① Remove the fixed screws on the power cord by using a screwdriver. ② Draw out the power cord; Note: Please note the color of each power cord and also the corresponding terminal number when removing the power cord in case of misconnection.
2. Disassemble the pipeline connected with compressor	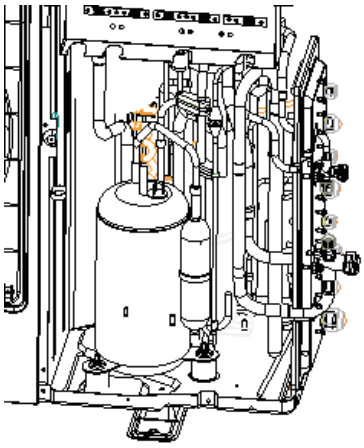
	Disconnect the pipeline connected with compressor.

Steps	Procedure
3. Remove the bad compressor	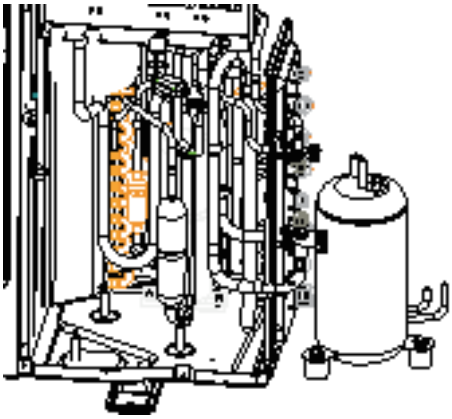
① Remove the bolts retaining the compressor. ② Remove the bad compressor from the bottom plate	
4. Place the new compressor on the bottom plate and connect the suction inlet and discharge outlet with the pipe system	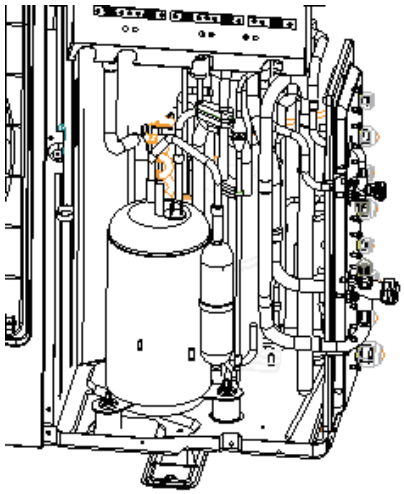
① Place the compressor on the bottom plate. ② Tighten the nuts .	

Disassembly and Assembly of 4-way Valve	
Steps	**Procedure**
1. Remove the 4-way valve coil	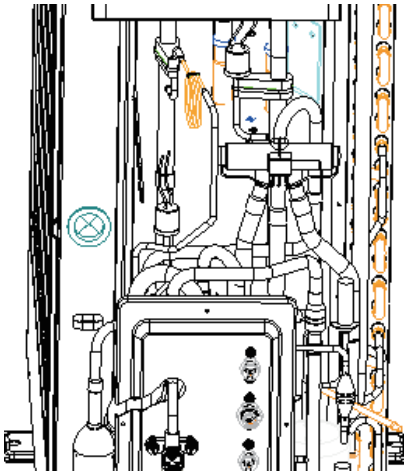
① Remove the screws on the fixed coil by using a screwdriver. ② Remove the 4-way valve coil.	

Steps	Procedure	
2. Remove 4-way valve		
	Reclaim all refrigerant charge in system. Cut all line connections to 4-way valve and . remove from unit.	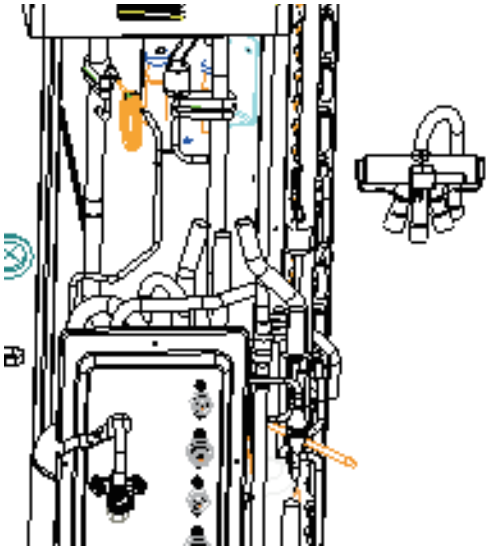
3. Replace the 4-way valve		
	① Place the new 4-way valve in the right place. ② Reweld the new 4-way valve with the pipeline.	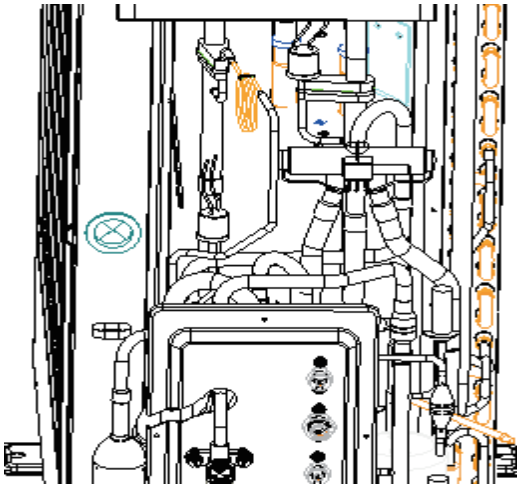
4. Install the 4-way valve coil		
	① Replace the 4-way valve coil in place ② Tighten the screws with a screwdriver.	

Disassembly and Assembly of Electronic Expansion Valve		
Steps	**Procedure**	
1. Remove the electronic expansion valve coil		
	Remove the electronic expansion valve coil by rotating it until the lock is unfixed.	
2. Remove the electronic expansion valve		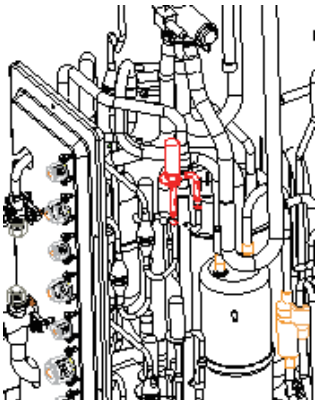
	Cut all lines to the electronic expansion valves then remove.	
3. Replace the electronic expansion valve		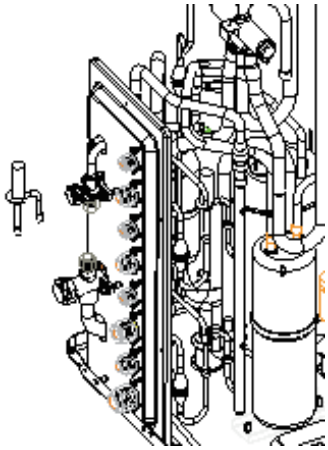
	Place the new electronic expansion valve in the right place.	
4. Reconnect the electronic expansion valve with the pipeline		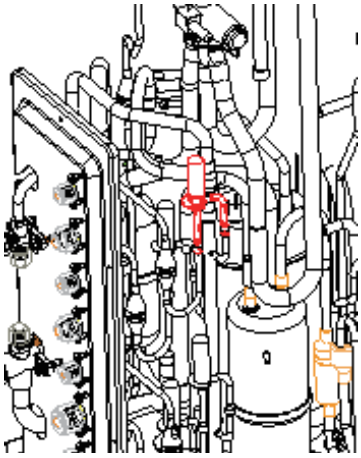
	Reconnect the electronic expansion valve with the pipeline by welding.	
5. Install the electronic expansion valve coil		
	Set the electronic expansion valve coil on the valve body and adjust the lock to the right place.	

Disassembly and Assembly of Vapor Liquid Separator		
Steps	**Procedure**	
1. Disconnect the liquid separator and the connected pipeline		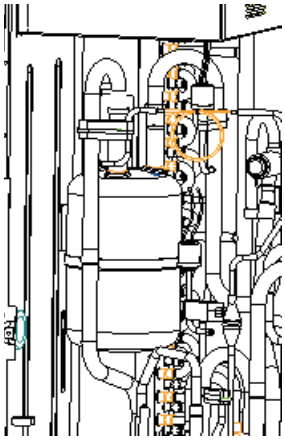
	Disconnect the liquid separator and the connected pipeline.	
2. Remove the liquid separator		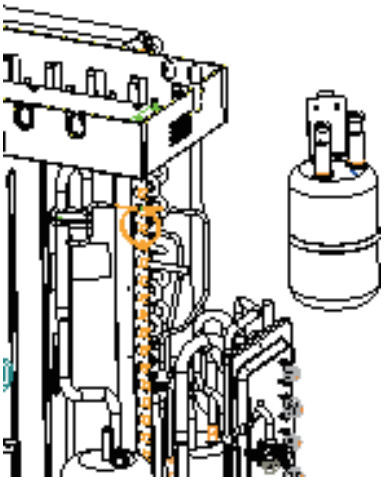
	① Remove the bolt retaining the liquid separator ② Remove the liquid separator from the middle baffle.	
3. Fix the new liquid separator and connect it with the pipeline		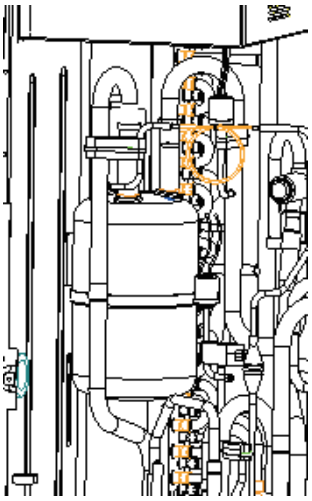
	① Place the new liquid separator on the middle baffle ② Tighten the bolt and reconnect the new liquid separator with the pipeline by welding.	

Copyright 2013 Carrier Corp. • 7310 W. Morris St. • Indianapolis, IN 46231

Manufacturer reserves the right to change, at any time, specifications and designs without notice and without obligations.