40MVC012 with 38MVC012
Comfort™ Series High Wall Duct–Free Split System
Cooling Only with Puron® Refrigerant

Carrier®
Turn to the Experts.℠

Submittal Data

Job Data:_____ Location:_____

Buyer:_____ Buyer P.O.#_____ Carrier # _____

Unit Number:_____ Model Number: _____

Performance Data Certified By: _____ Date: _____

eez™
Worry-FREE. Hassle-FREE. Duct-FREE.℠

Puron®
the environmentally sound refrigerant

FEATURES

- 13 SEER
- Wireless remote standard
- Low voltage controls
- 35 VDC indoor fan motor
- User selectable fan speeds (auto, low med., high)
- Indoor unit is powered from the outdoor unit
- Auto restart
- Diagnostics
- Dehumidification mode
- Turbo Mode
- Sleep mode
- Auto swing
- Timer
- Cleanable filters
- Limited Warranty: 1-year on all parts/5-years on compressor

Indoor Unit - 40MVC / Outdoor Unit - 38MVC
(Unless otherwise indicated, data applies to both indoor and outdoor models)

SYSTEM SIZE 012
REFRIGERANT R-410A
PERFORMANCE
Nominal Capacity 12,000
SEER 13
Airflow (Low/Med/High) . . . . . 340 / 365 / 425
Performance at actual conditions: Attached ☐ Not Attached ☐
SOUND PRESSURE dBA
Indoor (Low/Med/High) . . . . . 40 / 42 / 47
Outdoor 54
SOUND POWER dBA
Indoor (Low/Med/High) . . . . . 51 / 53 / 58
Outdoor 65

ELECTRICAL
System Voltage . . . . . 38/40MVC012---1 = 115-1-60 V
. . . . . 38/40MVC012---3 = 208/230-1-60 V
MCA (outdoor) . . . . . 115V = 15
. . . . . 208/230V = 9
MOCP (outdoor) . . . . . 115V = 25
. . . . . 208/230V = 15
Fan Motor (Indoor) (FLA) 1.18
Motor Watts 25
CONTROLS
Control Remote . . . . . Wireless
Control Voltage . . . . . Low Voltage
Interconnecting (indoor to outdoor) Wiring (0-50 ft.) . . . . . 18 AWG
Interconnecting (indoor to outdoor) Wiring (50-65 ft.) . . . . . 16 AWG
REFRIGERANT LINES (Insulate both lines)
Mixed Phase Line (in.) OD 1/4
Vapor Line (in.) OD 1/2
Metering/Control Device . . . . . Capillary tube in outdoor unit

Condensate Pump: Required ☐ Not Required ☐
Low Ambient Controls: Required ☐ Not Required ☐
Crankcase Heater: Required ☐ Not Required ☐
Wind Baffle: Required ☐ Not Required ☐

Optional:
Compressor extended warranty 6-10 years: Required ☐ Not Required ☐
All parts & labor 2-5 years: Required ☐ Not Required ☐
All parts & labor 2-5 years + Compressor 6-10 years: Required ☐ Not Required ☐

UNIT DIMENSIONS – INDOOR MODEL

Model Size	W in. (mm)	H in. (mm)	D in. (mm)	Operating Weight lb (kg)
012	35.67 (906)	11.26 (286)	9.25 (235)	25.3 (11)

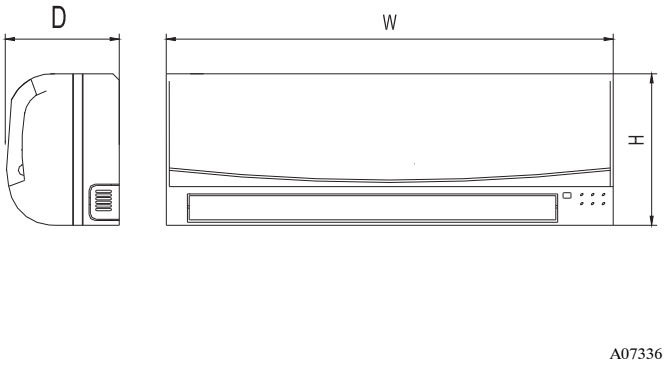

Fig. 1 – 40MVC Dimensions

UNIT CLEARANCES – INDOOR MODEL

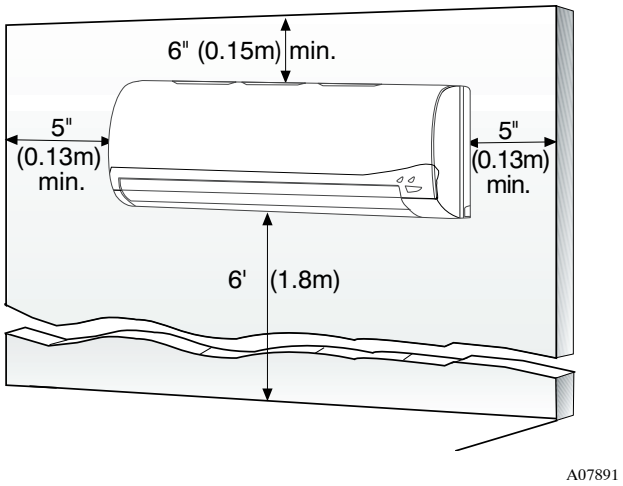

Fig. 2 – 40MVC Clearance

UNIT DIMENSIONS – OUTDOOR MODEL

Model Size	W in. (mm)	H in. (mm)	L1 in. (mm)	L2 in. (mm)	L3 in. (mm)	Weight lb (kg)
12K	29.92 (760)	23.23 (590)	20.87 (530)	12.40 (315)	11.42 (290)	79.2 (36)

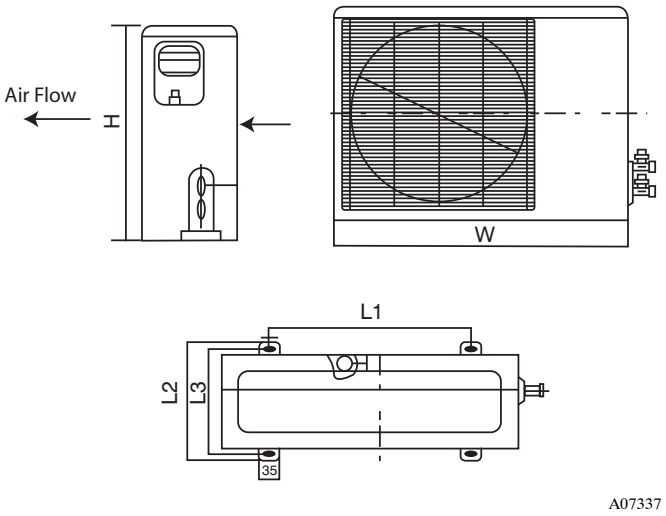

Fig. 3 – 38MVC DIMENSIONS

UNIT CLEARANCES – OUTDOOR MODEL

UNIT	12k in. (mm)
A	24 (610)
B	24 (610)
C	24 (610)
D	4 (102)
E	12 (305)

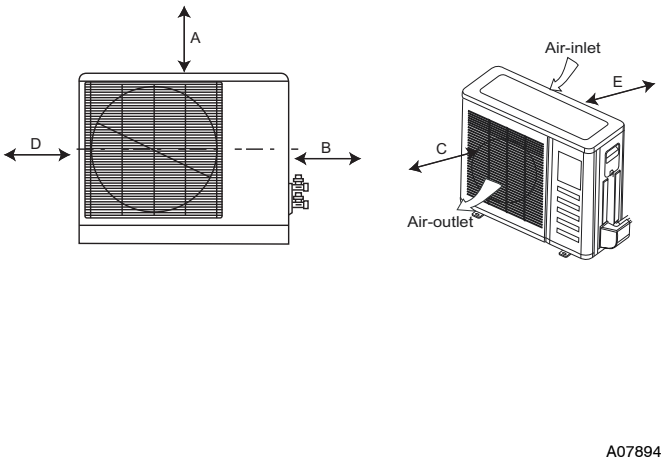

Fig. 4 – 38MVC Clearances

Copyright 2008 Carrier Corp. • 7310 W. Morris St. • Indianapolis, IN 46231
Printed in U.S.A. Edition Date: 01/08 **Catalog No: 38–40MVC012–2SB**

Manufacturer reserves the right to change, at any time, specifications and designs without notice and without obligations.
Replaces: 38–40MVC012–1SB