48/50HC 17−28
Single Package Rooftop Units
with *ComfortLINK* Controls Version 1.X
and PURON® (R−410A) Refrigerant

Carrier
turn to the experts

Controls, Start−Up, Operation and Troubleshooting

NOTE: Although the ComfortLink software (v1.x) and this document reference the Humidi-MiZer™, the factory installed Humidi-MiZer option is not available for EnergyX equipped 48/50HC 17-28 units as of this time.

IMPORTANT: This literature covers 48/50HC 17-28 models with ComfortLink Software version 1.x.

TABLE OF CONTENTS

Page

SAFETY CONSIDERATIONS 2
GENERAL 3
BASIC CONTROL USAGE 3
*Comfort*Link Control 3
Scrolling Marquee 3
Accessory Navigator Display 4
Operation 4
System Pilot™ and Touch Pilot Devices 4
CCN Tables and Display 4
Conventions Used in This Manual 6
START-UP 6
Unit Preparation 6
Compressor Mounting 6
Refrigerant Service Ports 6
Crankcase Heater(s) 6
Compressor Rotation 6
Power Supply 6
Internal Wiring 6
Evaporator Fan 6
Condenser Fans and Motors 6
Return-Air Filters 6
Outdoor-Air Inlet Screens 6
Accessory Installation 6
Orifice Change (48HC) 6
Gas Heat (48HC) 7
EnergyX 7
CONTROLS QUICK SET-UP 7
Control Set Point and Confirmation Log 7
Thermostat Control 8
Space Temperature Sensor Control - Direct Wired (T-55 or T-56 or T-59) 8
T-58 Communicating Room Sensor 8
CCN Linkage Control 8
System Pilot - Communication Space Sensor 8
Thermidistat Control 8
Space Humidistat Control 8
Relative Humidity Sensor Control 8
CCN Communication 8
Accessories 8
Programming Operating Schedules 9
SERVICE TEST 11
Independent Outputs 11
Fan Test 11
Cooling Test 11
Heating Test 12
THIRD PARTY CONTROL 12
Cooling/Heating Control 12
Dehumidification Control 12
Remote Occupancy 12
Fire Shutdown 12
Alarm Output 12
Economizer Damper Control 12
CONTROLS OPERATION 13
Display Configuration 13
Unit Configuration 13
Modes 13
General Operation 14
Temperature Setpoint Determination 14
Occupancy Determination 15
Cooling Operation 16
Heating Operation 17
Economizer 19
Indoor Air Quality (IAQ) 21
EnergyX 23
Temperature Compensated Start 23
Carrier Comfort Network (CCN)® Configuration 23

Demand Limit 24
Linkage 24
Alarm Handling 24
TROUBLESHOOTING 25
Complete Unit Stoppage 25
Restart Procedure 25
Alarms and Alerts 25
Control Module Communication 32
Communication Failures 32
Cooling Troubleshooting 33
Economizer Troubleshooting 34
Heating Troubleshooting 35
Phase Loss Protection 38
Thermistor Troubleshooting 38
Transducer Troubleshooting 39
Forcing Inputs and Outputs 39
MAJOR SYSTEM COMPONENTS 42
General 42
Main Base Board (MBB) 47
Economizer Control Board (ECB) 49
Integrated Gas Control (IGC) Board 51
Low Voltage Terminal Strip (TB 1) 52
Communication Interface Board 52
Central Terminal Board 52
Scrolling Marquee Display 54
Accessory Navigator™ Display 54
Carrier Comfort Network (CCN)® Interface 54
EnergyX 56
Protective Devices 56
Field-Installed Accessories 56
APPENDIX A - LOCAL DISPLAY AND CCN TABLES 59
APPENDIX B - CONTROL MODES WITH Humidi-MiZer™ SYSTEM AND ECONOMIZER 74
CONTROL SET POINT AND CONFIGURATION LOG 75
UNIT START-UP CHECKLIST 81

SAFETY CONSIDERATIONS

Installation and servicing of air-conditioning equipment can be hazardous due to system pressure and electrical components. Only trained and qualified service personnel should install, repair, or service air-conditioning equipment. Untrained personnel can perform the basic maintenance functions of replacing filters. Trained service personnel should perform all other operations.

When working on air-conditioning equipment, observe precautions in the literature, tags and labels attached to the unit, and other safety precautions that may apply. Follow all safety codes. Wear safety glasses and work gloves. Use quenching cloth for unbrazing operations. Have fire extinguishers available for all brazing operations.

Follow all safety codes. Wear safety glasses and work gloves. Have fire extinguisher available. Read these instructions thoroughly and follow all warnings or cautions attached to the unit. Consult local building codes and National Electrical Code (NEC) for special requirements.

Recognize safety information. This is the safety-alert symbol ⚠. When you see this symbol on the unit and in instructions or manuals, be alert to the potential for personal injury.

Understand the signal words DANGER, WARNING, and CAUTION. These words are used with the safety-alert symbol. DANGER identifies the most serious hazards which **will** result in severe personal injury or death. WARNING signifies a hazard which **could** result in personal injury or death. CAUTION is used to identify unsafe practices which **may** result in minor personal injury or product and property damage. NOTE is used to highlight suggestions which **will** result in enhanced installation, reliability, or operation.

⚠ WARNING

ELECTRICAL SHOCK HAZARD

Failure to follow this warning could cause personal injury or death.

Before performing service or maintenance operations on unit, turn off main power switch to unit and install lockout tag. Ensure electrical service to rooftop unit agrees with voltage and amperage listed on the unit rating plate.

⚠ CAUTION

UNIT DAMAGE HAZARD

Failure to follow this caution may cause equipment damage.

This unit uses a microprocessor-based electronic control system. Do not use jumpers or other tools to short out components or to bypass or otherwise depart from recommended procedures. Any short-to-ground of the control board or accompanying wiring may destroy the electronic modules or electrical components.

⚠ WARNING

FIRE, EXPLOSION HAZARD

Failure to follow this warning could result in personal injury, death and/or property damage.

Improper installation, adjustment, alteration, service, or maintenance can cause property damage, personal injury, or loss of life. Refer to the User's Information Manual provided with this unit for more details.

Do not store or use gasoline or other flammable vapors and liquids in the vicinity of this or any other appliance. **What to do if you smell gas:**

1. DO NOT try to light any appliance.
2. DO NOT touch any electrical switch, or use any phone in your building.
3. IMMEDIATELY call your gas supplier from a neighbor's phone. Follow the gas supplier's instructions.
4. If you cannot reach your gas supplier, call the fire department.

GENERAL

This publication contains Start-Up, Controls, Operation, Service, and Troubleshooting information for the 48/50HC rooftop units. (See Table 1.) These units are equipped with *Comfort*Link controls version 1.X or higher and use Puron® refrigerant. The specific base unit installation instructions, service manual and/or wiring label diagram may also be required in conjunction with this book as a guide to a specific unit on the roof. All the units in table 1 are Constant Volume (CV) units that provide stand-alone or network operation.

Table 1 – Rooftop Units

MODEL	SIZE	NOMINAL TONS
48/50HC	17	15
	20	18
	24	20
	28	25

BASIC CONTROL USAGE

*Comfort*Link Control

The *Comfort*Link control is a comprehensive unit-management system. The control system is easy to access, configure, diagnose and troubleshoot.

The *Comfort*Link control is fully communicating and cable-ready for connection to the Carrier Comfort Network® (CCN) building management system. The control provides high-speed communications for remote monitoring via the Internet. Multiple units can be linked together (and to other *Comfort*Link control equipped units) using a 3-wire communication bus.

The *Comfort*Link control system is easy to access through the use of a unit-mounted display module. There is no need to bring a separate computer to this unit for start-up. Access to control menus is simplified by the ability to quickly select from 11 menus. A scrolling readout provides detailed explanations of control information. Only four, large, easy-to-use buttons are required to maneuver through the entire controls menu. The display readout is designed to be visible even in bright sunlight.

For added service flexibility, an accessory hand-held Navigator™ module is also available. This portable device has an extended communication cable that can be plugged into the unit's communication network at the main control box. The Navigator display provides the same menu structure, control access and display data as is available at the unit-mounted Scrolling Marquee display.

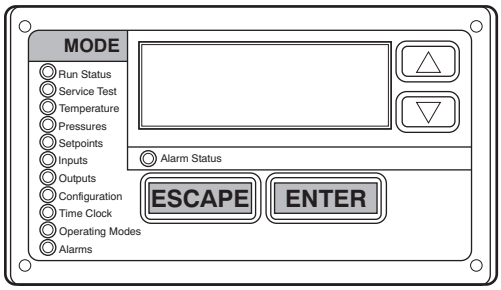

C06320

Fig. 1 - Scrolling Marquee

Scrolling Marquee

This device is the keypad interface used to access the control information, read sensor values, and test the unit. The Scrolling Marquee is located in the main control box and is standard on all units. The Scrolling Marquee display is a 4-key, 4-character, 16-segment LED (light-emitting diode) display module. The display also contains an Alarm Status LED. (See Fig. 1.)

The display is easy to operate using 4 buttons and a group of 11 LEDs that indicate the following menu structures:

- Run Status
- Service Test
- Temperatures
- Pressures
- Set points
- Inputs
- Outputs
- Configuration
- Timeclock
- Operating Modes
- Alarms

Through the Scrolling Marquee, the user can access all of the inputs and outputs to check on their values and status, configure operating parameters plus evaluate the current decision status for operating modes. The control also includes an alarm history which can be accessed from the display. In addition, through the Scrolling Marquee, the user can access a built-in test routine that can be used at start-up commissioning and to diagnose operational problems with the unit. (See Table 2.)

Accessory Navigator Display

The accessory hand-held Navigator display can be used with the 48/50HC units. (See Fig. 2.) The Navigator display operates the same way as the Scrolling Marquee device. The Navigator display is plugged into the LEN (local equipment network) port on either CIB or the J3 port on the ECB (economizer control board).

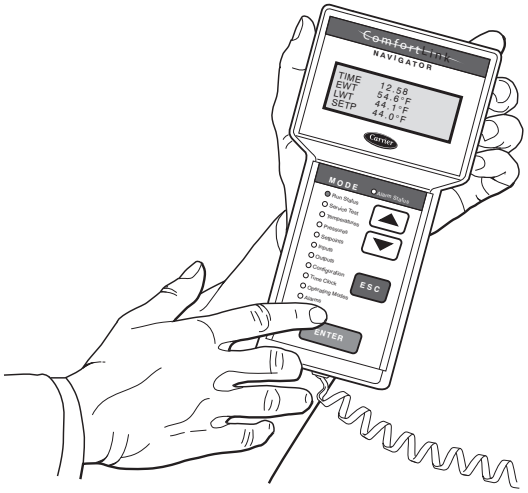

C06321

Fig. 2 – Accessory Navigator Display

Operation

All units are shipped from the factory with the Scrolling Marquee display, which is located in the main control box. (See Fig. 1.) In addition, the *Comfort*Link control also supports the use of the handheld Navigator display.

Both displays provide the user with an interface to the *Comfort*Link control system. The displays have up and down arrow keys, an ESCAPE key and an ENTER key. These keys are used to navigate through the different levels of the display structure. The Navigator display and the Scrolling Marquee operate in the same manner, except that the Navigator display has multiple lines of display and the Scrolling Marquee has a single line. All further discussions and examples in this document will be based on the Scrolling Marquee display. See Table 2 for the menu structure.

The four keys are used to navigate through the display structure, which is organized in a tiered mode structure. If the buttons have not been used for a period, the display will default to the AUTO VIEW display category as shown under the RUN STATUS category. To show the top-level display, press the ESCAPE key until a blank display is shown. Then use the up and down arrow keys to scroll through the top-level categories. These are listed in Appendix A and will be indicated on the Scrolling Marquee by the LED next to each mode listed on the face of the display.

When a specific mode or sub-mode is located, push the ENTER key to enter the mode. Depending on the mode, there may be additional tiers. Continue to use the up and down keys and the ENTER keys until the desired display item is found. At any time, the user can move back a mode level by pressing the ESCAPE key. Once an item has been selected the display will flash showing the item, followed by the item value and then followed by the item units (if any).

Items in the Configuration and Service Test modes are password protected. The display will flash PASS and WORD when required. Use the ENTER and arrow keys to enter the four digits of the password. The default password is 1111.

Pressing the ESCAPE and ENTER keys simultaneously will scroll an expanded text description across the display indicating the full meaning of each display point. Pressing the ESCAPE and ENTER keys when the display is blank (MODE LED level) will return the display to its default menu of rotating AUTO VIEW display items. In addition, the password will need to be entered again before changes can be made.

Changing item values or testing outputs is accomplished in the same manner. Locate and display the desired item. If the display is in rotating auto-view, press the ENTER key to stop the display at the desired item. Press the ENTER key again so that the item value flashes. Use the arrow keys to change the value of state of an item and press the ENTER key to accept it. Press the ESCAPE key and the item, value or units display will resume. Repeat the process as required for other items.

There are some points that can be forced from the Scrolling Marquee or the Navigator. If the user needs to force a variable, follow the same process as when editing a configuration parameter. A forced variable, regardless where the force has come from will be displayed with a blinking "." on a Scrolling Marquee and a blinking "f" on a Navigator following its value. For example, if economizer commanded position (EC.CP) is forced, the Navigator display shows "80f", where the "f" is blinking to signify a force on the point. The Scrolling Marquee display shows "80." Where the "." is blinking to signify a force on the point. Remove the force by selecting the point that is forced with the key ENTER and then pressing the up and down arrow keys simultaneously.

Depending on the unit model, factory-installed options and field-installed accessories, some of the items in the various Mode categories may not apply.

System Pilot™ and Touch Pilot Devices

The System Pilot device (33PILOT-01) and Touch Pilot device (33CNTPILOT) can be used as CCN communication user-interfaces. These devices can be put on the CCN bus and addressed to communicate with any other device on the network. Unlike the Scrolling Marquee and Navigator, these pilots read the unit's CCN tables and its CCN points can be monitored, forced, or configured. The Pilot devices can be used to install and commission a 3V zoning system, linkage compatible air source, universal controller, and all other devices operating on the Carrier communicating network.

Additionally, the System Pilot device can serve as a wall-mounted temperature sensor for space temperature measurement. The occupant can use the System Pilot device to change set points. A security feature is provided to limit access of features for unauthorized users. See Fig. 3 for System Pilot device details.

CCN Tables and Display

In addition to the unit-mounted Scrolling Marquee display, the user can also access the same information through the CCN tables by using the Service tool or other CCN programs/devices. The variable names used for the CCN tables and the Scrolling Marquee menus may be different and more items may be displayed in the CCN tables. Details on the CCN tables are included with the local display menus in Appendix A. Appendix A is structured towards the organization of the local display (Scrolling Marquee) menus. Because of the variety of CCN programs and devices, the CCN tables, sub-tables, and points are referenced within that organization.

Table 2 – Scrolling Marquee Mode and Menu Display Structure

RUN STATUS	SERVICE TEST	TEMPERATURES	PRESSURES	SETPOINTS	INPUTS	OUTPUTS	CONFIGURATION	TIME CLOCK	OPERATING MODES	ALARMS
Auto View of Run Status (VIEW) ↓ Software Version Numbers (VERS) ↓ Control Modes (MODE) ↓ Cooling Status (COOL) ↓ Heating Status (HEAT) ↓ Economizer Status (ECON) ↓ Outside Air Unit Status (OAU) ↓ Component Run Hours (HRS) ↓ Component Starts (STRT)	Service Test Mode (TEST) ↓ Test Independent Outputs (INDP) ↓ Test Fans (FANS) ↓ Test Cooling (COOL) ↓ Test Humidi-MiZer™ (HMZR) ↓ Test Heating (HEAT)	Air Temperatures (AIR.T) ↓ Refrigerant Temperatures (REF.T)			Thermostat Inputs (STAT) ↓ General Inputs (GEN.I) ↓ Air Quality Inputs (AIR.Q)	Fan Outputs (FANS) ↓ Cool Outputs (COOL) ↓ Heat Outputs (HEAT) ↓ Economizer Outputs (ECON) ↓ Alarm Relay (ALRM)	Display Configuration (DISP) ↓ Unit Configuration (UNIT) ↓ Indoor Fan Configuration (I.FAN) ↓ Cooling Configuration (COOL) ↓ Humidi-MiZer™ Config. (HMZR) ↓ Heating Configuration (HEAT) ↓ Economizer Configuration (ECON) ↓ Air Quality Cfg. (AIR.Q) ↓ Outside Air Unit Configuration (OAU) ↓ Alarm Relay Config. (ALM.O) ↓ Sensor Calibration (TRIM) ↓ CCN Configuration (CCN)	Time of Day (TIME) ↓ Month, Date Day and Year (DATE) ↓ Daylight Savings Time (DST) ↓ Local Time Schedule (SCH.L) ↓ Local Holiday Schedules (HOL.L)	Control Modes (MODE) ↓ Cool Mode Diagnostic (COOL) ↓ Heat Mode Diagnostic (HEAT) ↓ Economizer Diagnostic (ECON) ↓ Outside Air Unit Diagnostic (OAU) ↓ Demand Listing (DMD.L)	Reset All Current Alarms (R.CURR) ↓ Reset Alarm History (R.HIST) ↓ Currently Active Alarms (CURR) ↓ Alarm HIstory (HIST)

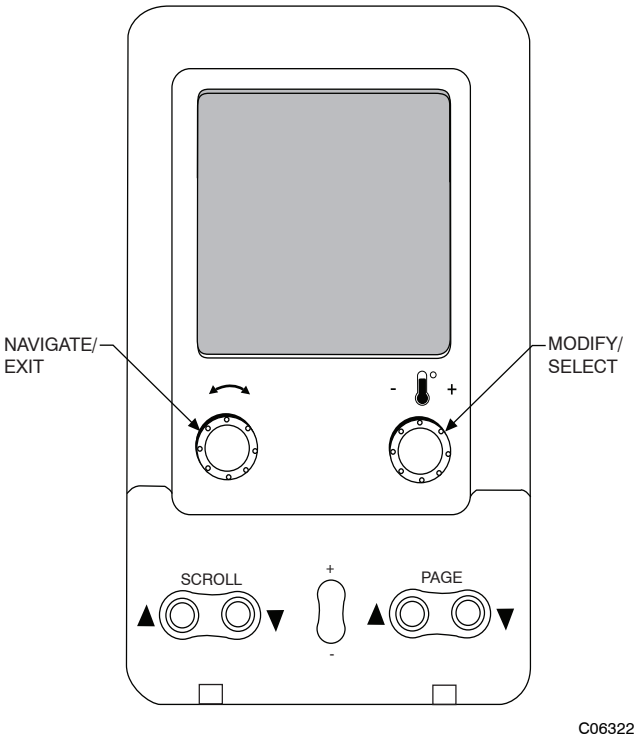

Fig. 3 - System Pilot™ User Interface

Force Hierarchy

There is a hierarchy in CCN with regards to forcing a point. Programs and devices write a force at different priority levels. A higher level (smaller number, 1 being the highest) will override a lower level force. The Scrolling Marquee uses a Control Force at level 7. The Navigator writes a Service Force which is level 3. System Pilots and Touch Pilots write Supervisor Forces at level 4. Network programs can be set to write different level priority forces.

Generic Status Display Table

The GENERIC points table allows the service/installer the ability to create a custom table in which up to 20 points from the 5 CCN categories (Points, Config, Service-Config, Set Point, and Maintenance) may be collected and displayed.

In the Service-Config table section, there is a table named "GENERICS." This table contains placeholders for up to 20 CCN point names and allows the user to decide which points are displayed in the GENERIC points sub-table under the status display table. Each one of these placeholders allows the input of an 8-character ASCII string. Using a CCN interface, enter the Edit mode for the Service-Config table "GENERICS" and enter the CCN name for each point to be displayed in the custom points table in the order they will be displayed. When done entering point names, download the table to the rooftop unit control.

IMPORTANT: The computer system software (ComfortVIEW™, Service Tool, etc.) that is used to interact with CCN controls, always saves a template of items it considers as static (e.g., limits, units, forcibility, 24-character text strings, and point names) after the software uploads the tables from a control. Thereafter, the software is only concerned with run time data like value and hardware/force status. With this in mind, it is important that anytime a change is made to the Service-Config table "GENERICS" (which in turn changes the points contained in the GENERIC point table), that a complete new upload be performed. This requires that any previous table database be completely removed first. Failure to do this will not allow the user to display the new points that have been created and the CCN interface will have a different table database than the unit control.

Conventions Used in This Manual

The following conventions for discussing configuration points for the local display (Scrolling Marquee or Navigator™ accessory) will be used in this manual.

Point names will be written with the Mode name first, then any submodes, then the point name, each separated by an arrow symbol (→). Names will also be shown in bold and italics. As an example, the Thermostat Control Type which is located in the Configuration mode, and Unit sub-mode would be written as ***Configuration→UNIT→T.CTL*.**

This path name will show the user how to navigate through the local display to reach the desired configuration. The user would scroll through the modes and sub-modes using the up and down keys. The arrow symbol in the path name represents pressing ENTER to move into the next level of the menu structure.

When a value is included as part of the path name, it will be shown at the end of the path name after an equals sign. If the value represents a configuration setting, an explanation will be shown in parenthesis after the value. As an example, ***Configuration→UNIT→T.CTL* = 1** (1 Stage Y1).

Pressing the ESCAPE and ENTER keys simultaneously will scroll an expanded text description of the point name across the display. The expanded description is shown in the local display tables but will not be shown with the path names in text.

The CCN point names are also referenced in the local display tables for users configuring the unit with CCN software instead of the local display. See Appendix A of this manual.

START-UP

IMPORTANT: Do not attempt to start unit, even momentarily, until all items on the Start-Up Checklist (see page 81) and the following steps have been read/completed.

Unit Preparation

Check that unit has been installed in accordance with these installation instructions and all applicable codes.

Compressor Mounting

Compressors are internally spring mounted. Do not loosen or remove compressor holddown bolts.

Refrigerant Service Ports

Each independent refrigerant system has a total of 3 Schrader-type service gauge ports per circuit. One port is located on the suction line, one on the compressor discharge line, and one on the liquid line. Be sure that caps on the ports are tight.

Crankcase Heater(s)

Compressor crankcase heater operation varies depending on the unit size and type. In general for all units, the crankcase heaters are energized if there is power to the unit and the compressor is not operating.

IMPORTANT: Unit power must be on for 24 hours prior to start-up. Otherwise, damage to compressor may result.

Compressor Rotation

⚠ CAUTION

UNIT DAMAGE HAZARD

Failure to follow this caution may result in unit damage.

Improper wiring will cause compressor stoppage and alarm. Correct wiring by switching leads as indicated below.

On 3-phase units, it is important to be certain the compressors are rotating in the proper direction. To determine whether or not compressors are rotating in the proper direction, use a phase-rotation meter on the unit input power to check for L1-L2-L3 or clockwise rotation or use the Service Test mode to energize a compressor. If the compressor is rotating in the wrong direction, the controls will stop the compressor and display alarm for "Circuit x Failure to Pressurize," where x is the corresponding A or B compressor circuit.

NOTE: Indoor or outdoor fan rotation direction may not indicate proper input power phase sequence, as some 3-phase units use single-phase fan motors.

To correct the wrong compressor rotation direction, perform the following procedure:

1. Turn off power to the unit and lock out the power.
2. Switch any two of the incoming unit power leads.
3. Turn on power to the unit.
4. Verify corrected compressor rotation.

Power Supply

All 208/230-v units are factory wired for 230-v power supply. If the 208/230-v unit is to be connected to a 208-v power supply, the transformers (TRAN1, TRAN2 and TRAN3) must be rewired by moving the wire from the 230-volt connection and moving to the 200-volt terminal on the primary side of the transformer. Refer to unit label diagram for additional information.

Internal Wiring

Check all electrical connections in unit control boxes; tighten as required.

Evaporator Fan

Fan belt and variable pulleys are factory-installed, but may need to be adjusted for specific applications. Be sure that the fans rotate in the proper direction.

NOTE: Units equipped a VFD still must conform to minimum CFM requirements at all times and the fan speed configurations must be set for this compliance.

Condenser Fans and Motors

Condenser fans and motors are factory set.

Return-Air Filters

Check that correct filters are installed in filter tracks (see Physical Data table in Installation Instructions). Do not operate unit without return-air filters.

Outdoor-Air Inlet Screens

Outdoor-air inlet screens must be in place before operating unit.

Accessory Installation

Check to make sure that all accessories including space thermostats and sensors have been installed and wired as required by the instructions and unit wiring diagrams.

Orifice Change (48HC)

This unit is factory assembled for heating operation using natural gas at an elevation from sea level to 2000 ft.

Use accessory high altitude kit when installing this unit at an elevation of 2000 to 7000 ft. For elevations above 7000 ft, refer to High Altitude section to identify the correct orifice size for the elevation. Purchase these orifices from your local Carrier dealer. Follow instructions in accessory Installation Instructions to install the correct orifices.

Use accessory LP (liquid propane) gas conversion kit when converting this unit for use with LP fuel usage for elevations up to 7000 ft. For elevations above 7000 ft, refer to High Altitude section to identify the correct orifice size for the elevation. Purchase these orifices from your local Carrier dealer. Follow instructions in accessory Installation Instructions to install the correct orifices.

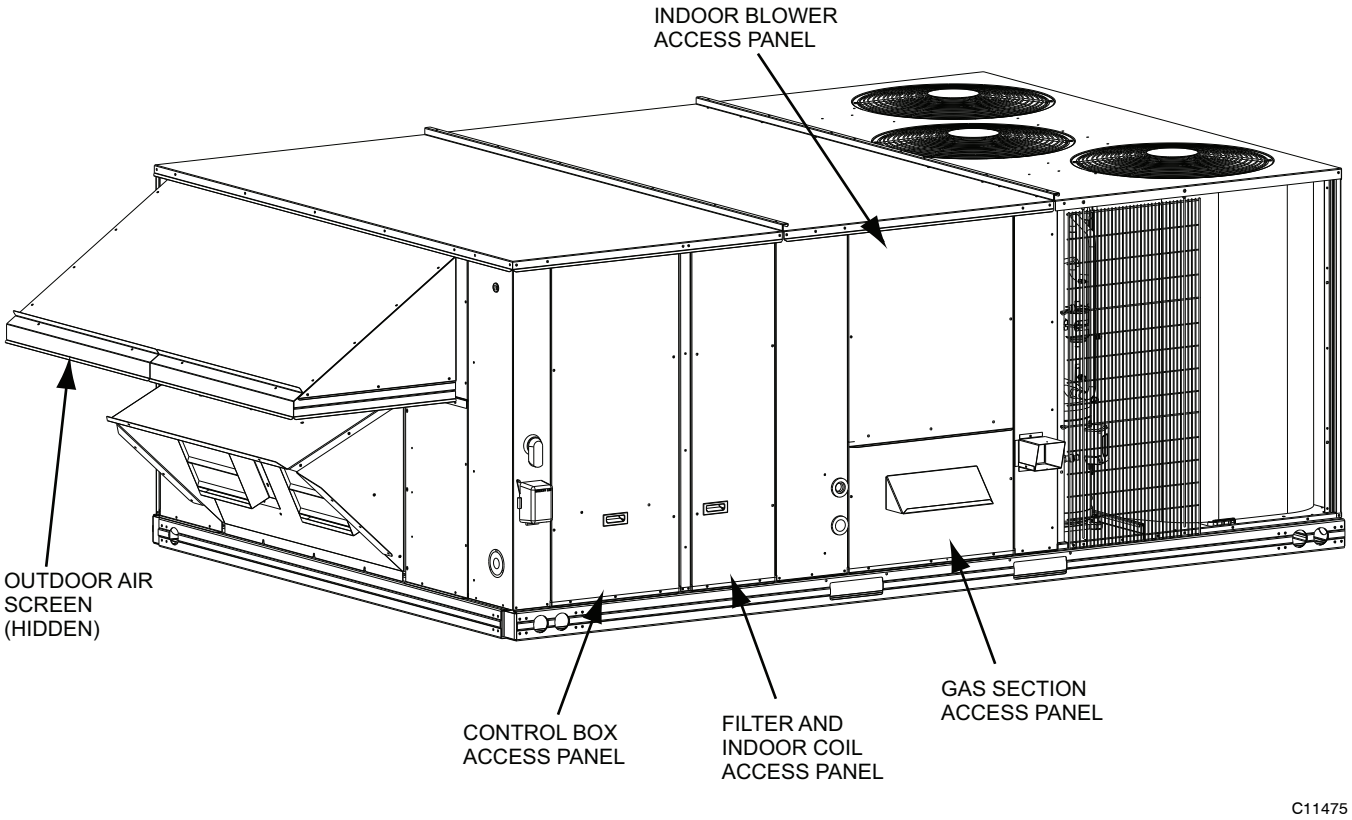

Fig. 4 - 48/50HC 17-28 Size Units, Panel and Filter Locations (48HC*17 Unit Shown)

Gas Heat (48HC)

Inspect the gas heat section of the unit. Verify the number of burners match the number of heat exchanger openings and the burner assembly is properly aligned. If the orifices were changed out for elevation or Liquid Propane purposes, verify proper installation. Visually inspect other components in heat section.

Verify gas pressures before turning on heat as follows:

1. Turn off field-supplied manual gas stop, located external to unit.
2. Connect pressure gauge to supply gas tap, located on field-supplied manual shutoff valve. (See Fig. 5.)

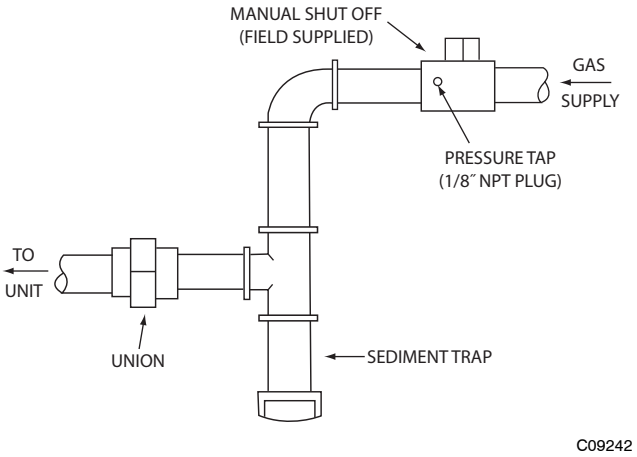

Fig. 5 - Field Gas Piping

3. Connect pressure gauge to manifold pressure tap.
4. Turn on field-supplied manual gas stop. Enter Service Test mode by setting ***Service Test→TEST*** to "ON" using the Scrolling Marquee display. Temporarily install the jumper wire between "R" and "W1" on TB A. Use the Service Test feature to set ***Service Test→HEAT→HT.1*** to ON (first stage of heat) using the Scrolling Marquee.
5. After the unit has run for several minutes, verify the supply gas pressure is adequate per the base unit installation instructions. If not, adjust accordingly.

NOTE: Supply gas pressure must not exceed 13.0-in. wg.

6. Set ***Service Test→HEAT→HT.1*** to OFF using Scrolling Marquee.
7. Remove jumper wire if the unit will be operating under thermostat mode. The jumper must remain if a space temperature sensor (T-55, T-56, T-58, or System Pilot™ device) will control the unit.
8. Exit Service Test mode by setting ***Service Test→TEST*** to "OFF" using the Scrolling Marquee.

EnergyX

For units equipped with the EnergyX factory installed option, there is an EnergyX Supplement Installation Instructions in the unit's information packet. Follow the start up sequence and complete the start up checklist contained in the EnergyX Supplement to complete unit startup.

CONTROLS QUICK SET-UP

The following information will provide a quick guide to setting up and configuring the 48/50HC series units with *Comfort*Link controls. Unit controls are pre-configured at the factory for factory-installed options. Field-installed accessories will require configuration at start-up. Service Test is recommended for initial start-up. Additionally, specific job requirements may require changes to default configuration values. See the CCN and Display parameter tables and other sections of these instructions for more details. Refer to the Major System Components or accessory installation instructions for specific wiring detail.

Control Set Point and Configuration Log

During start up, accessory installation, and equipment service set points and/or configuration changes might have to be made. When setting set points or changing configuration settings, documentation is recommend. The Control Log starting on page NO TAG. should be filled out and left with the unit at all times, a copy should also be provided to the equipment owner.

Thermostat Control

Wire accessory thermostat to the corresponding R, Y1, Y2, W1, W2, and G terminals on the field connection terminal board located at the unit control box.

The Unit Control Type configuration, ***Configuration →UNIT→U.CTL,*** default value is for Thermostat (2) so there is no need to configure this item.

The Thermostat Control Type, ***Configuration →UNIT→T.CTL,*** selects the unit response to the thermostat inputs above.

NOTE: May not be compatible with heat anticipator thermostats.

Space Temperature Sensor Control - Direct Wired (T-55 or T-56 or T-59)

Wire accessory space temperature sensor(s) to the T-55 terminals on the field connection terminal board located at the unit control box. Refer to Field-Installed Accessories section for additional information.

The Unit Control Type configuration, ***Configuration →UNIT→U.CTL***, must be set to Space Sensor (3). The jumper wire in the installer's packet must be connected between R and W1 on TB A for heating mode to operate.

T-58 Communicating Room Sensor

Install the T-58 communicating thermostat. Connect the CCN communication bus from the T-58 to the CCN terminals on the field connection terminal board located at the unit control box. Configure the unit's CCN communication element number, bus number, and baud rate. Configure the T-58's CCN communication bus number and baud rate the same as the unit, while the element number has to be different. Configure the T-58 to send SPT to the unit's element number. Refer to the Field-Installed Accessories section for additional information.

The Unit Control Type configuration, ***Configuration →UNIT→U.CTL***, must be set to Space Sensor (3). The jumper wire in the installer's packet must be connected between R and W1 on TB A for heating mode to operate.

CCN Linkage Control

The CCN communication must be properly configured for the 48/50HC units and all other devices. Linkage configuration is automatically done by the supervisory CCN Linkage device.

The Unit Control Type configuration, ***Configuration →UNIT→U.CTL*** must be set to Space Sensor (3). The jumper wire in the installer's packet must be connected between R and W1 on TB A for heating mode to operate.

Installation of an accessory supply air temperature (SAT) sensor in the supply duct is recommended for Linkage applications. A supply duct SAT measurement is valid for heating mode display, while the factory-standard internal SAT is not valid for heating due to its location upstream of the heating section. When installing the supply duct SAT, the heating mode display is enabled by setting ***Configuration→HEAT→SAT.H*** to ENBL.

Installation of an accessory return air temperature (RAT) sensor in the return duct and wired to the space sensor input is recommended for Linkage applications. This will allow the unit to continue to run if Linkage communication is lost.

System Pilot - Communication Space Sensor

Install the System Pilot and connect the CCN communication bus from it to the unit's CCN connection on the low voltage terminal board. Configure the unit's CCN communication element number, bus number, and baud rate. Refer to the System Pilot's installation instructions for configuring it to be used as a space temperature and attaching it to a unit.

Thermidistat Control

The thermidistat is a thermostat and humidistat combined and the inputs are provided on the field connection terminal board. The unit control type configuration, ***Configuration→UNIT→U.CTL***, default value is for thermostat (2) so there is no need to configure this item. The thermostat control type configuration, ***Configuration→UNIT→T.CTL***, selects the unit response to the thermostat inputs above. The space humidity switch configuration, ***Configuration→UNIT→RH.SW***, identifies the normally open or normally closed status of this input at LOW humidity (only on Humidi-MiZer™ units).

Space Humidistat Control

For units with the factory Humidi-MiZer™ option, the humidistat input is provided on the field connection terminal board. The Space Humidity Switch configuration, ***Configuration→UNIT→RH.SW***, identifies the normally open or normally closed status of this input at LOW humidity.

Relative Humidity Sensor Control

For units with the factory installed Humidi-MiZer™ option and the economizer option (with the ECB-economizer control board), the humidity sensor input is provided on the field connection terminal board (TB B). The sensor can be used in addition to or instead of a humidistat or thermidistat. The RH Sensor on OAQ Input configuration, ***Configuration→UNIT→RH.S=YES***, identifies that the sensor is being used instead of an OAQ sensor. Adjust RH setpoints as needed. Terminal LPWR is the 24vdc loop power and Terminal SPRH is the 4-20 mA signal input. Refer to the Field Installed Accessories and Humidi-MiZer™ Operation sections for more information.

CCN Communication

Configure ***Configuration→CCN→CCN.A*** to desired element number. (Default is 1.) Configure ***Configuration→CCN→ CCN.B*** to desired bus number. (Default is 0.) Configure ***Configuration→CCN→BAUD*** to desired code number for baud rate (Default is 3 = 9600 baud).

Accessories

Below are quick configuration settings for field installed accessories. If these accessories were installed by the factory, they will already be configured. See the Field-Installed Accessories section, third party control, control connection tables, and CCN or Display parameter tables for any accessories not mentioned below and any additional information on accessories.

Economizer

If an Economizer accessory was field installed, the unit must be configured for it by setting ***Configuration→ECON→EC.EN*** to YES. The default settings for the other economizer configurations should be satisfactory. If they need to be changed, additional information about these configuration settings can be found in the Economizer section.

Power Exhaust

If a Power Exhaust accessory was field installed, the unit must be configured for it by setting ***Configuration→ECON→PE.EN*** to ENBL. The default settings for the other power exhaust configurations should be satisfactory. If they need to be changed, additional information about these configurations can be found in the Power Exhaust section.

Electric Heat

If an Electric Heat accessory was field installed, the unit must be configured for it by setting ***Configuration→HEAT→HT.TY*** to a value of 2. The number of electric heat stages must be configured by setting ***Configuration→HEAT→N.HTR*** per the installed heater.

Fire Shutdown

If a Fire Shutdown or Smoke Detector accessory was field installed, the unit must be configured for it by setting ***Configuration→UNIT→FS.SW*** to normally open (1) or normally closed (2) when there is not a fire alarm. Normally open (1) is the preferred configuration.

Outdoor Enthalpy

If an Outdoor Enthalpy accessory was field installed, the unit must be configured for it by setting ***Configuration→ECON→EN.SW***, identifies the normally open or normally closed status of this input when the outdoor enthalpy is low.

IAQ Switch

If an IAQ Switch accessory was field installed, the unit must be configured for it by setting ***Configuration→AIR.Q→II.CF***, identifies the normally open or normally closed status of this input when the indoor air quality value is low (good) and also selects the unit response to this input.

NOTE: An IAQ switch cannot be used if an enthalpy switch is already on this input.

IAQ Sensor

If an CO_2 Sensor accessory was field installed, the unit must be configured for it by setting ***Configuration→AIR.Q→IA.CF*** selects the unit response to this input. Default conversion to 0 to 2000 ppm.

OAQ Sensor

If an Outdoor Air Quality Sensor accessory was field installed, the unit must be configured for it by setting ***Configuration→AIR.Q →OA.CF*** selects the unit response to this input. Default conversion to 0 to 2000 ppm.

Fan Status

If a Fan Status accessory was field installed, the unit must be configured for it by setting ***Configuration→UNIT→FN.SW*** to normally open (1) or normally closed (2). Normally open (1) is the preferred configuration.

Filter Status

If a Filter Status accessory was field installed, the unit must be configured for it by setting ***Configuration→UNIT→FL.SW*** to normally open (1) or normally closed (2). Normally open (1) is the preferred configuration.

Programming Operating Schedules

The *Comfort*Link controls will accommodate up to eight different schedules (Periods 1 through 8), and each schedule is assigned to the desired days of the week. Each schedule includes an occupied on and off time. As an example, to set an occupied schedule for 8 AM to 5 PM for Monday through Friday, the user would set days Monday through Friday to ON for Period 1. Then the user would configure the Period 1 Occupied From point to 08:00 and the Period 1 Occupied To point to 17:00. To create a different weekend schedule, the user would use Period 2 and set days Saturday and Sunday to ON with the desired Occupied On and Off times.

NOTE: By default, the time schedule periods are programmed for 24 hours of occupied operation.

To create a schedule, perform the following procedure:

1. Scroll to the Configuration mode, and select CCN CONFIGURATION (CCN). Scroll down to the Schedule Number (***Configuration→CCN→SCH.O=SCH.N***). If password protection has been enabled, the user will be prompted to enter the password before any new data is accepted. ***SCH.N*** has a range of 0 to 99. The default value is 1. A value of 0 is always occupied, and the unit will control to its occupied set points. A value of 1 means the unit will follow a local schedule, and a value of 65 to 99 means it will follow a CCN schedule. Schedules 2-64 are not used as the control only supports one internal/local schedule. If one of the 2-64 schedules is configured, then the control will force the number back to 1. Make sure the value is set to 1 to use a local schedule.
2. Enter the Time Clock mode. Scroll down to the LOCAL TIME SCHEDULE (***SCH.L***) sub-mode, and press ENTER. Period 1 (***PER.1***) will be displayed.
3. Scroll down to the MON.1 point. This point indicates if schedule 1 applies to Monday. Use the ENTER command to go into Edit mode, and use the Up or Down key to change the display to YES or NO. Scroll down through the rest of the days and apply schedule 1 where desired. The schedule can also be applied to a holiday.
4. Configure the beginning of the occupied time period for Period 1 (OCC). Press ENTER to go into Edit mode, and the first two digits of the 00.00 will start flashing. Use the Up or Down key to display the correct value for hours, in 24-hour (military) time. Press ENTER and hour value is saved and the minutes digits will start flashing. Use the same procedure to display and save the desired minutes value.
5. Configure the unoccupied time for period 1 (***UNC***). Press ENTER to go into Edit mode, and the first two digits of the 00.00 will start flashing. Use the Up or Down key to display the correct value for hours, in 24-hour (military) time. Press ENTER and hour value is saved and the minutes digits will start flashing. Use the same procedure to display and save the desired minutes value.
6. The first schedule is now complete. If a second schedule is needed, such as for weekends or holidays, scroll down and repeat the entire procedure for period 2 (***PER.2***). If additional schedules are needed, repeat the process for as many as are needed. Eight schedules are provided. See Table 3 for an example of setting the schedule.

Table 3 – Setting an Occupied Time Schedule — Weekdays Only for 7:30 to 22:30

DISPLAY MENU	SUB-SUB MODE	KEYPAD ENTRY	ITEM	DISPLAY	ITEM EXPANSION	COMMENT
TIMECLOCK SCH.L		ENTER			Local Occupancy Schedule	
	PER.1	ENTER	OCC.1		Period Occupied Time	
		ENTER		00.00		Scrolling stops
		ENTER		00.00		Hours Flash
		▲		07.00		Select 7
		ENTER		07.00		Change accepted, minutes flash
		▲		07.30		Select 30
		ENTER		07.30		Change accepted
		ESCAPE	OCC.1	07.30	Period Occupied Time	Item/Value/Units scrolls again
		▼	UNC.1	00.00	Period Unoccupied Time	
		ENTER		00.00		Scrolling stops
		ENTER		00.00		Hours Flash
		▲		22.00		Select 22
		ENTER		22.00		Change accepted, minutes flash
		▲		22.30		Select 30
		ENTER		22.30		Change accepted
		ESCAPE	UNC.1	22.30	Period Unoccupied Time	Item/Value/Units scrolls again
		▼	MON.1	NO	Monday In Period	
		ENTER		NO		Scrolling stops
		▲		YES		Select YES
		ENTER		YES		Change accepted
		ESCAPE	MON.1	YES	Monday In Period	Item/Value/Units scrolls again
		▼	TUE.1	NO	Tuesday In Period	
		ENTER		NO		Scrolling stops
		▲		YES		Select YES
		ENTER		YES		Change accepted
		ESCAPE	TUE.1	YES	Tuesday In Period	Item/Value/Units scrolls again
		▼	WED.1	NO	Wednesday In Period	
		ENTER		NO		Scrolling stops
		▲		YES		Select YES
		ENTER		YES		Change accepted
		ESCAPE	WED.1	YES	Wednesday In Period	Item/Value/Units scrolls again
		▼	THU.1	NO	Thursday In Period	
		ENTER		NO		Scrolling stops
		▲		YES		Select YES
		ENTER		YES		Change accepted
		ESCAPE	THU.1	YES	Thursday In Period	Item/Value/Units scrolls again
		▼	FRI.1	NO	Friday In Period	
		ENTER		NO		Scrolling stops
		▲		YES		Select YES
		ENTER		YES		Change accepted
		ESCAPE	FRI.1	YES	Friday In Period	Item/Value/Units scrolls again
		ESCAPE				
		ESCAPE				

SERVICE TEST

The Service Test function can be used to verify proper operation of compressors, heating stages, Humidi-MiZer™ System, indoor fan, power exhaust fans, economizer, and the alarm relay. Use of Service Test is recommended at initial system start up and during troubleshooting (See Table 4 for point details).

Service Test mode has the following changes from normal operation:

- Outdoor air temperature limits for cooling circuits, economizer, and heating are ignored. Normal compressor time guards and other staging delays are reduced to 30 seconds or less.
- Circuit alerts are limited to 1 strike (versus 3) before changing to alarm shut down state.
- The status of ALM.N is ignored so all alerts and alarms are broadcast on CCN.
- The words "SERVICE TEST" are inserted into every alarm message.

Service test can only be turned ON/OFF at the unit display. Once turned ON, other entries may be made with the display or through CCN. To turn Service Test on, change the value of TEST to ON. To turn service test off, change the value of TEST to OFF.

NOTE: Service Test mode may be password protected. Refer to Basic Control Usage section for more information. Depending on the unit model, factory-installed options, and field-installed accessories, some of the Service Test functions may not apply.

Independent Outputs

The independent (INDP) submenu is used to change output status for the economizer, power exhaust stages, crankcase heaters, alarm relay, and outside air unit.. These independent outputs can operate simultaneously with other Service Test modes. All outputs return to normal operation when Service Test is turned off. When the economizer is using the factory default Digital Control Type (***Configuration→ECON→E.CTL*** is 1 or 2) then the Economizer Calibration feature may be used to automatically check and reset the economizer actuator range of motion. Refer to the economizer operation section of more details. On EnergyX equipped units, use the outside air unit (OAU) points to test the ERV components.

Fan Test

The fans (FANS) submenu is used to change output status for the indoor fan. On single speed fan units the indoor fan contactor can be energized or de-energized using the IDF1 test. For units with a VFD the indoor fan speed test (F.SPD) is available. F.SPD runs the fan at the desired speed entered. IDF Fan Mode (F.MOD) will run the fan at the programmed speed for each mode. When configured, IDF1, IDF2, and IDF3 can be used to test multiple fan speeds.

Cooling Test

The cooling (COOL) submenu is used to change output status for the individual compressors. Compressor starts are staggered by 15 seconds. The fans (FANS) and heating (HEAT) service test outputs are reset to OFF for the cooling service test. Indoor fans and outdoor fans are controlled normally to maintain proper unit operation. If LEN VFD fan is configured, then the indoor fan speed will default to the Mech. Cooling Fan Speed configuration point (***Configuration→I.FAN→FS.CL***) when one compressor is turned on. The Reduced Cool Fan Speed (F.SPD) can only be changed while one stage is running. If more then one stage is on the actual fan speed will be 100%. F.SPD shows the reduced speed not actual speed. On single stage units, actual fan speed will be 100% when the compressor is on. All normal cooling alarms and alerts are functional.

NOTE: Circuit A will always be operated with Circuit B.

Humidi-MiZer™ Test

NOTE: Although the ComfortLink software (v1.x) and this document reference the Humidi-MiZer™, the factory installed Humidi-MiZer option is not available for EnergyX equipped 48/50HC 17-28 units as of this time.

For units with the factory Humidi-MiZer™ option, the Humidi-MiZer (HZMR) submenu is used to change the output status to operate the circuits in different Humidi-MiZer modes or to separately test the Humidi-MiZer valve operations. Refer to the Humidi-MiZer operation section for details on these modes and valves. The fans (FANS), cooling (COOL), and heating (HEAT) service test outputs are reset to OFF for the Humdi-MiZer service test. Indoor and outdoor fans are controlled normally to maintain proper unit operation. If LEN VFD fan is configured, then the indoor fan speed will default to the Reheat2 Fan Speed configuration point (***Configuration→I.FAN→FS.RH***) when Reheat2 test is turned on. The Reheat2 fan speed (F.SPD) only reflects the speed setting for testing Reheat2 circuits, and can only be changed when a circuit is in Reheat2. Actual speed may be different if Reheat 1 tests are being performed. All normal cooling alarms and alerts are functional. Refer to the Humidi-MiZer operating section for more information.

NOTE: Circuit A must be operated with Circuit B.

Table 4 – Service Test Modes and Submodes Directory

DISPLAY MENU/ SUB--MENU/ NAME	EXPANDED NAME	VALUES
SERVICE TEST		
TEST	Field Service Test Mode	Off/On
INDP	Test Independent Outputs	
ECON	Economizer Position Test	0 to 100%
E.CAL	Calibrate Economizer	Off/On
PE.1	Power Exhaust 1 Test	Off/On
PE.2	Power Exhaust 2 Test	Off/On
ALRM	Alarm Relay Test	Off/On
OA.DM	OAU 2-position Damper	Close/Open
WHL	OAU Wheel Test	0 to 100%
OA.OF	OAU OA Fan Speed Test	0 to100
OA.XF	OAU PE Fan Speed Test	0 to100
OA.HT	OAU Tempring Heater Test	0 to 100
FANS	Test Fans	
F.SPD	Indoor Fan Speed Test	0 to 100
F.MOD	IDF Fan Mode	0 to 7
IDF.1	Indoor Fan 1 Test	Off/On
IDF.2	Indoor Fan 2 Test	Off/On
IDF.3	Indoor Fan 3 Test	Off/On
COOL	Test Cooling	
CMP.A	Cool A Test	Off/On
CMP.B	Cool B Test	Off/On
F.SPD	Reduced Cool Fan Speed	60 to 100
HMZR	Test Humidi–MiZer	
RH1.B	Reheat1 B Test	Off/On
RH1.C	Reheat1 C Test	Off/On
RH2.A	Reheat2 A Test	Off/On
RH2.B	Reheat2 B Test	Off/On
F.SPD	Reheat2 Fan Speed	0 to 100
CRC	Cool->Reheat1 Valve Test	Off/On
RHV.A	Reheat2 Valve A Test	Off/On
RHV.B	Reheat2 Valve B,C Test	Off/On
HEAT	Test Heating	
HT.1	Heat Stage 1 Test	Off/On
HT.2	Heat Stage 2 Test	Off/On
F.SPD	Reduced Heat Fan Speed	0 to 100

Heating Test

The heating (HEAT) submenu is used to change output status for the individual heat stages, gas or electric. The fans (FANS) and cooling (COOL) service test outputs are reset to OFF for the heating service test. Indoor and outdoor fans are controlled normally to maintain proper unit operation. All normal heating alarms and alerts are functional.

NOTE: Field terminal board terminal R must be connected to W1 (TB A-8 to TB A-4) for the heat to operate in service test. Alert number T410 will occur as a reminder if not done. If the normal unit control mode is thermostat mode, then remove the R-W1 jumper after completing service test.

THIRD PARTY CONTROL

Third party controls may interface with the unit *Comfort*Link controls through the connections described below. See other sections of these instructions for more information on the related unit control and configurations.

Cooling/Heating Control

The thermostat inputs are provided on the field connection terminal board. The Unit Control Type configuration, ***Configuration→UNIT→U.CTL***, must be 2 to recognize the below inputs. Terminal R is the 24vac source for the following:

- Y1 = First stage cooling
- Y2 = Second stage cooling
- W1 = First stage heating
- W2 = Second stage heating
- G = Indoor fan

Dehumidification Control

NOTE: Although the ComfortLink software (v1.x) and this document reference the Humidi-MiZer™, the factory installed Humidi-MiZer option is not available for EnergyX equipped 48/50HC 17-28 units as of this time.

On Humidi-MiZer™ units tje HUM terminal is provided on the field connection terminal board. Humidity Switch configuration, ***Configuration→UNIT→RH.SW***, identifies the normally open or normally closed status of this input at LOW humidity.

NOTE: Dehumidification is considered a cooling function in the software and is only available on Humidi-MiZer equipped units.

Remote Occupancy

The remote occupancy input is provided on the field connection terminal board (TB B). The Remote Occupancy Switch configuration, ***Configuration→UNIT→RM.SW,*** identifies the normally open or normally closed status of this input when unoccupied.

- RMOL = 24 VAC signal input
- R-2 = 24 VAC source for dry contact

Fire Shutdown

The fire shutdown input is provided for unit shutdown in response to a fire alarm or smoke detector. The Fire Shutdown Switch configuration, ***Configuration→UNIT→FS.SW,*** identifies the normally open or normally closed status of this input when there is no fire alarm.

- TB A - FDWN = 24 VAC signal input

Alarm Output

The alarm output is provided on the field connection terminal board (TB A) to indicate a current alarm status. The output will be 24VAC if a current alarm exists.

- C-2 = 24 VAC common
- X = 24 VAC signal output

Economizer Damper Control

For units with the economizer option or accessory and the ECB control board, the damper position can be directly controlled through the IAQ sensor input provided on the field connection terminal board (TBB). The IAQ Analog Input configuration, ***Configuration→AIR.Q→IA.CF*** will have to set to 3 (Control Minimum Position). When IA.CF = 3, an external 4 to 20 mA source is used to move the damper 0% to 100% directly.

IAQ = 4-20mA + signal
COM = 4-20mA - common

NOTE: In this mode, preset minimum positions configurations are not valid, the damper position may exceed the input position to provide economizer cooling and CO_2 sensor input can not be used for DCV control. Refer to the Indoor Air Quality operation section for more information.

CONTROLS OPERATION

Display Configuration

The ***Configuration→DISP*** submenu is used to configure the local display settings.

Metric Display (METR)

This variable is used to change the display from English units to Metric units.

Language Selection (LANG)

This variable is used to change the language of the *Comfort*Link display. At this time, only English is available.

Password Enable (PROT)

This variable enables or disables the use of a password. The password is used to restrict use of the control to change configurations.

Service Password (PSWD)

This variable is the 4-digit numeric password that is required if enabled.

Test Display LEDs (TEST)

This is used to test the operation of the *Comfort*Link display.

Unit Configuration

Many configurations that indicate what factory options and/or field accessories are installed and other common operation variables are included in Unit Configuration (***Configuration→UNIT***). These configurations will be set in the factory for the factory-installed options (FIOPs). Field-installed accessories installed will require configuration changes. General unit and fan control configurations are also covered under this Unit Configuration menu.

Start-Up Delay (S.DLY)

This configuration sets the control start-up delay after the power is interrupted. This can be used to stagger the start-up of multiple units.

Unit Control Type (U.CTL)

This configuration defines if temperature control is based on thermostat inputs or space temperature sensor input.

- ***U.CTL = 2*** (Thermostat) – The unit determines cooling and heating demand by the state of G, Y1, Y2, W1, and W2 inputs from a space thermostat. This value is the factory default.
- ***U.CTL = 3*** (Space Sensor) – The unit determines cooling and heating demand based on the space temperature and the appropriate set point. Used also as Linkage configuration. The jumper wire in the installer's packet must be connected between R and W1 on the low voltage terminal board (TB A) for heating mode to operate.

Thermostat Control Type (T.CTL)

This configuration applies only if Unit Control Type is Thermostat (***Configuration→Unit→U.CTL = 2***). The value determines alternative cooling and Humidi-MiZer™ circuit staging. See the Cooling and Humidi-MiZer sections for more information. The factory default value is ***T.CTL* = 0** (Adaptive).

Fan Status Switch (FN.SW)

This configuration identifies if a fan status switch is installed, and what status (normally open, normally closed) the input is when the indoor fan is OFF.

Filter Status Switch (FL.SW)

This configuration identifies if a filter status switch is installed, and what status (normally open, normally closed) the input is when the filter is CLEAN.

Fire Shutdown Switch (FS.SW)

This configuration identifies if a fire shutdown switch is installed, and what status (normally open, normally closed) the input is when the fire or smoke alarm is OFF (no alarm).

Remote Occupancy Switch (RM.SW)

This configuration identifies if a remote occupancy switch is installed, and what status (normally open, normally closed) the input is when UNOCCUPIED.

SAT Settling Time (SAT.T)

This configuration sets the settling time of the supply air temperature (SAT). This tells the control how long to wait after a stage change before trusting the SAT reading. See Adaptive Thermostat Control (***U.CTL* = 2**, ***T.CTL* = 0**) and Space Sensor Control (***U.CTL* = 3**) within the Cooling operation section for more information. The factory default value is 240 seconds.

RAT Sensor Installed (RAT.S)

This configuration identifies if a return air temperature (RAT) sensor is installed. A YES value enables RAT display. A NO value disables RAT display. Installing an RAT sensor will allow economizer differential dry bulb control. Refer to the economizer operation for more information.

RH Sensor On OAQ Input (RH.S)

This configuration identifies if a space relative humidity sensor is installed on the outdoor air quality (OAQ) input. A YES value enables ***SP.RH*** display. If a Humdi-MiZer unit, then the unit determines dehumidification demand based on this input and the appropriate set point. A NO value disables SP.RH display and use.

Space Humidity Switch (RH.SW)

This configuration identifies if a space relative humidity switch is installed on the ENTHALPY input, and what status (normally open, normally closed) the input is when the space humidity is LOW.

Temperature Compensated Start Cooling Factor (TCS.C)

This factor is used in the equation of the Temperature Compensated Start Time Bias for cooling. A setting of 0 minutes indicates Temperature Compensated Start in Cooling is not permitted.

Temperature Compensated Start Heating Factor (TCS.H)

This factor is used in the equation of the Temperature Compensated Start Time Bias for heating. A setting of 0 minutes indicates Temperature Compensated Start in Heating is not permitted.

Modes

The *Comfort*Link controls operate under a hierarchy of command structure as defined by four main elements: the System Mode, the HVAC Mode, the Occupied status, and the Unit Control Type.

The System Mode is the top level that defines three main states of the control system: Disabled, Enabled, or Test.

The HVAC Mode is the next level that defines four main states of functional operation: Disabled, Fan Only, Cool, and Heat.

The Occupied status affects set points for cooling and heating in Space Sensor control mode and operation of the economizer for indoor air quality ventilation and free cooling.

The Unit Control Type (***Configuration→UNIT→U.CTL***) defines if temperature control is based on thermostat inputs or space temperature sensor input.

The general operating mode of the control and the status of some related operation lockouts are located on the display at two locations: ***Run Status→ MODE*** and ***Operating Modes→ MODE***.

System Mode (SYS)

In Run Status and Operating Modes, the current system mode is displayed with expandable text. This is an overall state of the unit. Three states are: Unit Operation Disabled, Unit Operation Enabled, or Service Test Enabled.

HVAC Mode (HVAC)

In Run Status and Operating Modes, the current allowed HVAC mode is displayed with expandable text. This is the mode the unit decides to run in based on its inputs. There are four main HVAC modes; cooling has six different expanded texts. These modes are shown below.

HVAC Mode	Expanded Text	Brief Description
Disabled	HVAC Operation Disabled	Unit is in test mode or System mode is disabled
Fan Only	Ventilation (fan–only)	Fan may run for ventilation
Cooling	Cooling	Mechanical cooling
	Free Cooling	Only economizer used for cooling
	Unoccupied Free Cooling	Only economizer use for cooling (occupied cooling set point active)
	Reheat1	All running circuits in sub–cooling mode
	Reheat2	All running circuits in Hot Gas Reheat mode
	Reheat1/Reheat2	Sub–cooling and Hot Gas Reheat active
Heating	Heating	Heating mode

Indoor Fan Mode (F.MOD)

This displays the mode in which the fan is running. There are 8 fan modes in total, the 1-Speed fans can only be in 1 of 2 modes (off or High). Staged Air Volume (SAV) units can utilize all 8 modes if programmed for it. The table below shows the 8 modes and a brief description for each.

Fan Mode	Expanded Text	Brief Description
0	OFF	When the fan is off
1	High	When fan is on in 1–Speed units or at high speed on SAV units
2	Low Cool	On SAV units with 2 cooling stages, when only 1 cooling stage is requested
3	Vent	On SAV units, when in vent mode and fan is on
4	IAQ Override	On SAV units, in any mode when IAQ override is active
5	N/A	Not available at this time
6	Dehum	On SAV units, in cooling mode, and specific conditions allow
7	Low Free Cool	On SAV units, in cooling mode, and specific conditions allow

HVAC Operation Disabled (HV.DN)

Allow disabling of HVAC mode. This is only available on a network connection and shows if the unit has been forced into the disabled status.

Cool Setpoint In Effect (EFF.C)

This shows the actual setpoint that is being used for control during cooling mode. If a 0 is displayed, then space sensor control is not being used and the unit is being controlled by a thermostat.

Heat Setpoint In Effect (EFF.H)

This shows the actual setpoint that is being used for control during heating mode. If a 0 is displayed, then space sensor control is not being used and the unit is being controlled by a thermostat.

Currently Occupied (OCC)

Displays the current state of assumed space occupancy based on unit configuration and inputs.

Timed Override in Effect (T.OVR)

Displays if the state of occupancy is currently occupied due to an override.

Linkage Active (LINK)

Displays if a linkage communication “Linkage” is established between the unit and a linkage source.

Demand Limit in Effect (D.LMT)

Displays if a demand limit has been placed on the unit’s capacity.

Compressor OAT Lockout (C.LOC)

Displays if operation of one or more compressors is prevented due to outdoor temperature limit lockout.

Heat OAT Lockout (H.LOC)

Displays if heating operation is prevented due to outdoor temperature limit lockout.

Econo Cool OAT Lockout (E.LOC)

Displays if economizer operation for cooling is prevented due to outdoor temperature limit lockout.

General Operation

48/50HC units can provide cooling, dehumidification, heating, and ventilation operation. Each unit will operate under one of two basic types of control: thermostat or space temperature sensor. There are many inputs, configurations, safety factors, and conditions that ultimately control the unit. Refer to the specific operation sections for detail on a specific unit operation.

When thermostat control is enabled (***Configuration→UNIT →U.CTL = 1***), the unit will operate based on discrete input commands (G, Y1, Y2, W1, and W2) and there is a one minute time delay between modes and when re-entering a mode. The G command calls for ventilation, the Y1 and Y2 commands call for cooling, and the W1 and W2 commands call for heating. Thermostat Control Type (***Configuration→UNIT→T.CTL***) affects how cooling operates based on Y1 and Y2 commands and if cooling/heating stage time guards are applied.

When space temperature sensor control is enabled (***Configuration →UNIT→U.CTL = 2***), the unit will try to maintain the Space Temperature (***Temperatures→AIR.T→SPT***) between the effective cool and heat setpoints (***Run Status→MODE→EFF.C*** and ***EFF.H***). However, to minimize unnecessary cool to heat and heat to cool changes, there is a 10 minute delay after the last stage turns off before the control will switch modes and a 1 minute delay when re-entering the last mode. Linkage operation overrides the mode changeover delay to 15 seconds. The cooling and heating Mode Select Timeguard (***Operating Modes→COOL→MS.TG*** and ***Operating Modes→HEAT→MS.TG***) show the remaining time before allowing the respective mode to be entered.

Temperature Setpoint Determination

Setpoints are used to control the unit while under space temperature sensor control. The Cool Setpoint in Effect (EFF.C) and the Heat Setpoint in Effect (EFF.H) are the points in which the unit is controlling to at a specific time. These points are read only points and change according to occupancy, the offset slider status, and network writes (Linkage or LON).

If the building is in occupied mode, the Occupied Cool Setpoint (***Setpoints→OCSP***) and the Occupied Heat Setpoint (***Setpoints →OHSP***) are active. When the building is in unoccupied mode, the Unoccupied Cool Setpoint (***Setpoints→UCSP***) and the Unoccupied Heat Setpoint (***Setpoints→UHSP***) are active. The heating and cooling set points are also separated by a Heat-Cool Set Point Gap (***Setpoints→GAP***) that is user configurable from 2 to 10 degrees F. This parameter will not allow the setpoints to be set too close together, it will change the last setpoint adjusted if it is set within the GAP.

When the space sensor has a setpoint slider adjustment, the cool and heat setpoints (occupied) can be offset by sliding the bar from one side to the other. The SPT Offset Range (+/-) (***Setpoints →STO.R***) sets the total positive or negative degrees that can be added to the setpoints. With the slider in the middle, no offset is applied. Moving the slider to the "COOL" side will subtract from each setpoint, and sliding it to the "WARM" side will add to the setpoints. The slider offset being applied at any given time is displayed as Space Temperature Offset (***Temperatures→AIR.T →SPTO***).

Occupancy Determination

The building's occupancy is affected by a number of different factors. When the unit is operating with a space temperature sensor (T-55, T-56, T-58 or T-59), occupancy affects the unit set points and the operation of the economizer. If the unit is operating under thermostat control, occupancy only affects the operation of the economizer. If the unit's Humidi-MiZer™ is being controlled by a relative humidity sensor, then occupancy will affect the RH setpoints. The factors affecting occupancy are listed below from highest to lowest priority.

Level 1 Priority

Level 1 classification is a force/write to occupancy and can occur three ways. Listed in order of priority: force on OCCUPIED, a write to NVI_OCC, and a Linkage write. The CCN point OCCUPIED is forced via an external device such as a ComfortID™ controller or a service tool. When OCCUPIED is forced to YES, the unit is considered occupied, when OCCUPIED is forced to NO, the unit is considered unoccupied. If the 3rd party protocol LON is writing to NVI_OCC, the control maps it to OCCUPIED as an input. If the unit is being controlled by Linkage, the occupancy is communicated and mapped to OCCUPIED as an input. LON and Linkage do not force the point, only write to it, therefore a force applied to OCCUPIED will override them.

If OCCUPIED is not being forced or written to, proceed to the level 2 priority.

Level 2 Priority

Remote Occupancy Switch should be configured to either Normally Open or Normally Closed when the user would like to control the occupancy with an external switch. This switch is field-supplied (24v, single pole, single throw [SPST]). There are three possible configurations for the remote occupancy switch:

1. (***Configuration→UNIT→RM.SW = 0***) No Switch
2. (***Configuration→UNIT→RM.SW = 1***) Normally Open Switch
3. (***Configuration→UNIT→RM.SW = 2***) Normally Closed Switch

If the switch is configured to No Switch (0), the switch input value will be ignored and software will proceed to level 3 priority. For each type of switch, the appropriate configuration and states are listed in the table below. The Remote Occupancy Switch (***INPUTS→GEN.I→RM.OC***) point will show the status of the switch.

TYPE OF SWITCH	SWITCH CONFIGURATION	STATE OF SWITCH AND STATE OF OCCUPANCY
Occupied when Closed or Unoccupied when Open	Normal Open (1)	Open and Unoccupied
		Closed and Occupied
Occupied when Open or Unoccupied when Closed	Normal Closed (2)	Open and Occupied
		Closed and Unoccupied

NOTE: To perform remote occupancy, an Economizer Control Board must be installed in the unit.

Level 3 Priority

The following occupancy options are determined by the state of Occupancy Schedule Number (***Configuration→CCN→SCH.O →SCH.N***) and the Global Schedule Broadcast (***Configuration →CCN→ BROD→B.GS***).

1. (***Configuration→CCN→SCH.O→SCH.N = 0***) The unit is always considered occupied and the programmed schedule is ignored. This is the factory default.
2. (***Configuration→CCN→SCH.O→SCH.N = 1-64***) Follow the local programmed schedule. Schedules 1 to 64 are local within the controller. The unit can only store one local schedule and therefore changing this number only changes the title of the schedule table.
3. (***Configuration→CCN→SCH.O→SCH.N = 65-99***) Follow the global programmed schedule. If the unit is configured as a Global Schedule Broadcaster (***Configuration→CCN→BROD→B.GS = YES***), the unit will follow the unit's programmed schedule and broadcast the schedule so that other devices programmed to follow this schedule number can receive the schedule. If the unit is not programmed as a Global Schedule Broadcaster (***Configuration→CCN→BROD→B.GS = NO***), the unit will receive broadcasted schedules from a unit programmed to broadcast this schedule number. While using the programmed schedule, occupancy can be temporarily switched from unoccupied to occupied by pressing the override button for approximately 3 seconds on the T-55, T-56, T-58 or T-59 space temperature sensor. Override will only occur if SPT Override Enabled (***Configuration →CCN→SCH.O→OV.SP***) is set to YES. The length of the override period when pressing the override button is determined by the Override Time Limit (***Configuration →CCN→SCH.O→OV.TL***). The hours remaining in override is displayed as Timed Override Hours (***Configuration→CCN→SCH.O→OV.EX***). This point can also be changed from the local display or network to set or change the override period length.

Indoor Fan Operation

The indoor fan is required for every function of the unit and has several configurations that effect its operation. The Indoor Fan Type configuration (***Configuration →I.FAN →FTYP***) sets the type of fan and how it is controlled. These 48/50HC units can utilize the 1-Speed (FTYP = 0) or the LEN VFD (FTYP = 1) fan types. The Number of Speeds configuration (***Configuration →I.FAN →NSPD***) is not used with fan types 1-Speed or LEN VFD. The fan operation for these two fan types is explained in detail below. For gas heating units, the IGC fan request output (***Inputs →GEN.I →IGC.F***) is also monitored by the MBB control. This can result in additional modification of fan delays or other operation due to safety functions of the IGC control. See the Gas Heating operation section for more details. If configured for IAQ fan operation, the fan may be turned on to satisfy air quality demands. See the Indoor Air Quality section if using IAQ (indoor air quality) accessory sensors. The fan can only run under thermostat or space sensor control if the System Mode (SYS) status is enabled. The fan will remain on if compressors or heat relays are ever stuck on. If configured for fan status switch (FN.SW) and Shut Down on IDF Failure is enabled (***Configuration →UNIT →IDF.F*** = Yes), the fan and unit will be shutdown without delay on alarm. Fan off delays are honored when exiting specific HVAC modes. The Fan-off Delay delays are as follows: Mech Cool (***Configuration →COOL →FOD.C***), Elect Heat (***Configuration →HEAT →FOD.E***), and Gas Heat (***Configuration → HEAT →FOD.G***).

Constant Volume (CV) Units (FTYP = 1-Speed)

Single speed fan units are controlled by the Indoor Fan Relay 1 (***Outputs →FANS →IDF.1***) on the main base board (MBB), which then operates the indoor fan contactor (IFC). The fan will be either on or off depending on the unit control type and the conditions above.

Thermostat Control

In thermostat mode, the IDF relay will be on in the following situations: fan request G in ON, cooling request Y1 or Y2 is ON, or heating request W1 or W2 is ON. If the G call is dropped or was never on with an Y1, Y2, W1, or W2 call; the IDF relay will turn off after a configurable time delay with respect to the HVAC mode that is ending.

Space Sensor Control

In Space Sensor mode, the IDF relay will be on if the unit is in Occupied mode and the indoor fan is configured to always run while occupied (***Configuration →I.FAN →OC.FN*** = YES). If the indoor fan is configured for intermittent fan (OC.FN = No), the fan will only be on when there are cooling, heating, or dehumidification stages running; or if there is an air quality demand. During the unoccupied period, the fan will operate intermittent. With intermittent fan, the IDF relay will turn off after a configurable time delay with respect to the HVAC mode that is ending.

Cooling Operation

The 48/50HC unit's cooling operation consists of: demand, mode determination, staging request to satisfy the demand, and handling a request with the unit's resources. These resources can include compressors, an economizer, and a reheat coil. This section covers mechanical cooling. For economizer and reheat cooling, refer to the Economizer and Humidi-mizer™ sections, respectively. The unit enters a cooling mode based on a demand, decides how to satisfy the demand, executes its plan, and then leaves the cooling mode.

Cooling Mode Control

The cooling HVAC mode (***Run Status→MODE→HVAC=3***) has six different expandable texts: Cooling, Free Cooling, Unoccupied Free Cooling, Reheat1, Reheat2, or Reheat1/Reheat2. These are all part of a general cooling mode and resemble the specific type of cooling that is being performed at any given time. All types of cooling are still performed under the general cooling function, and the expanded text is for user reference only. The control will display if it is ok to select the cooling mode (***Operating Modes →COOL→OK.CL= Yes***).

Thermostat Control

For the unit to enter cooling mode, three things must be true: the indoor fan must be ok to use, the mode changeover time guard must be expired, and there must be a cooling demand (Y1, Y2, or dehumidification demand). The unit will remain in cooling until the cooling demand is dropped or if any of the above conditions turn false. If only a dehumidification demand exists and a heat demand (W1, W2) occurs, the unit will end cooling. The cooling mode can not officially end until all compressors are off.

Space Sensor Control

For the unit to enter cooling mode, four things must be true: the indoor fan must be ok to use, the mode changeover time guard must be expired, the unit must have a valid space temperature, and there must be a cooling or dehumidification demand. The unit will remain in cooling for at least one minute and until the cooling demand drops below -0.5°F or if any of the above conditions turn false. If only a dehumidification demand exists and the heat demand becomes greater than the Reheat Heat Setpoint Deadband (***Setpoints→RH.HB***), the unit will end cooling. The cooling mode can not officially end until all compressors are off.

Staging Control

Once the unit is in a cooling mode, it must decide what the demand is and how to satisfy it. If an economizer is installed and can be used for cooling (***Operating Modes→COOL→OK.EC= Yes***), the unit will use it first (see economizer section for its operation). If the economizer can not be used or additional cooling is needed, a mechanical cooling check is performed. OK to use Compressors? (***Operating Modes→COOL→OK.MC***), will be set to yes when compressors are enabled and not locked out. Based on the unit control configuration, requested cooling stages (***Run Status →COOL→REQ.C***) will be determined then passed to compressor control to actually add the cooling stages.

Thermostat Control

There are two ways of requesting stages when thermostat control is enabled, Traditional Thermostat control or Adaptive control. Traditional Thermostat control is used if the Thermostat Control Type (T.CTL) is set to 1, 2, or 3 and the economizer is not available for free cooling. If Thermostat Control (T.CTL) is set to 0 or any time the economizer is available for free cooling, the unit will use Adaptive control for staging.

T.CTL = 0 (Adaptive Control)

Stage timers, Supply air trend, and supply air temperature limits apply when determining the request for stages. The first request (REQ.C=1) comes immediately when the Y1 input is active. The Cool Stage Increase Time (***Configuration→COOL→C.INC***) or the Cool Stage Decrease Time (***Configuration→COOL→C.DEC***) has to expire before another stage can be added or a stage can be subtracted. The Supply-Air Trend (***Operating Modes→COOL→SA.TR***) decides if the next stage can be requested or should be subtracted based on the Y2 input status. If the Y1 and Y2 inputs are dropped, the supply air trend is not considered because cooling is no longer needed. If at any time the Supply-Air Temperature (SAT) falls below the Minimum Supply Air Temperature Upper Level (***Configuration→COOL→SAT→SAT.U***), the requested stages will not be allowed to increase. If at any time the SAT falls below the Minimum Supply Air Temperature Lower Level (***Configuration→COOL→SAT→SAT.L***), the requested stages will be reduced by one without honoring C.DEC. If SAT.L and SAT.U are configured so that they are close together, the last stage of compressor might cycle rapidly, slowed only by its minimum on and off-time requirements.

T.CTL = 1 (1 Stage Y1) and T.CTL = 2 (2 Stage Y1)

Stage timers, Supply air trend, and supply air temperature limits do not apply when determining the request for stages. Request staging will follow the thermostat inputs directly. Y1 will request one stage. Y2 will request all stages.

T.CTL = 3 (Digital)

Stage timers, Supply air trend, and supply air temperature limits do not apply when determining the request for stages. Request staging will follow the thermostat inputs directly. Y1 will request one stage. Y2 will request two stages. Y1 and Y2 will request all stages.

Space Sensor Control

Space sensor staging control is an adaptive anticipation control that weighs the actual space demand against the trend of that demand and the trend of the supply air. It also honors stage time guards and supply air limits. The demand for cooling in the space is displayed as the Cooling Demand (***Run Status→COOL →DMD.C***). The control tries to anticipate the change in the space because of its current stage status. This anticipation is based on the Supply-Air Trend (***Operating Modes→COOL→SA.TR***) and the Cool Demand Trend (***Operating Modes→COOL→TRD.C***). These trends will show the control how the space is reacting to the current running conditions and help it decide when to add or remove one stage from the requested stages. The Cool Stage Increase Time (***Configuration→COOL→C.INC***) or the Cool Stage Decrease Time (***Configuration→COOL→C.DEC***) has to

expire before another stage can be added or a stage can be subtracted. If at any time the Supply-Air Temperature (SAT) falls below the Minimum Supply Air Temperature Upper Level (***Configuration→COOL→SAT→SAT.U***), the requested stages will not be allowed to increase. If at any time the SAT falls below the Minimum Supply Air Temperature Lower Level (***Configuration→COOL→SAT→SAT.L***), the requested stages will be reduced by one without honoring C.DEC. If SAT.L and SAT.U are configured so that they are close together, the last stage of compressor might cycle rapidly, slowed only by its minimum on and off-time requirements.

Compressor Control

The compressor control works hand and hand with the staging control. As the staging control requests stages, the compressor control determines what actual compressors are available or running and tries to provide stages for what is requested. The availability of a compressor depends on time guards, circuit diagnostics, outdoor temperature, and the unit size.

The Number of Circuits (***Configuration→COOL→N.CIR***) configuration tells the control how many compressors are installed on the unit. The Circuit A Lockout Temp (***Configuration→COOL→CIR.A→CA.LO***) and Circuit B Lockout Temp (***Configuration→COOL→CIR.B→CB.LO***) configurations set the outdoor temperature in which the respective compressor is allowed to run down to. Timeguard A (***Run Status→COOL→CIR.A→TG.A***) and Timeguard B (***Run Status→COOL→CIR.B→TG.B***) display the time a respective compressor has before it is available for use. Individual circuit diagnostic tests are performed during operation which may or may not allow a compressor to be used. The available stages at any given time are displayed as Available Compressors (***Run Status→COOL →AVL.C***). The actual compressors running at any given time are displayed as Actual Cooling Stages (***Operating Modes→COOL→ACT.C***). Compressor A (***Run Status→COOL→CIR.A →CMP.A***) and Compressor B (***Run Status→COOL→CIR.B →CMP.B***) are displayed on when the respective compressor is running.

There are time guards to protect the compressors. Compressor Min On Time (***Configuration→COOL→MRT.C***) and Compressor Min Off Time (***Configuration→COOL→MOT.C***) apply before a compressor can be turned back on or turned off.

Outdoor Fan Control

Outdoor fans are controlled electromechanically, not directly by the control system. Refer to specific unit wiring diagram and or service manual for details on how the outdoor fans operate. In general, the outdoor fan is energized with compressor A or may have partial fans operate with compressor B. Humidi-MiZer™ units will have a Motormaster® control on some or all fans.

Heating Operation

The 48/50HC unit's heating operation consists of: demand, mode determination, staging request to satisfy the demand, and handling a request with the unit's resources. These resources can be gas heat or electric heat. This section covers both gas heat units and electric heat units. The Type of Heat Installed (***Configuration→HEAT→HT.TY***) configuration will be factory set to 1 for gas units, 2 for electric heat units with heaters installed, and 0 for electric heat units without heat installed. The unit enters a heating mode based on a demand, decides how to satisfy the demand, executes its plan, and then leaves the heating mode.

Heating Mode Control

The heating HVAC mode (***Run Status→MODE→HVAC=4***), represents both types of heating (gas or electric) under all types of control. For the unit to be allowed to enter the heat mode, heat must be enabled (***HT.TY = 1 or 2***), and the Outdoor Air Temperature (***Temperatures→AIR.T→OA***T) must be less than the Heating Lockout Temp (***Configuration→HEAT→HT.LO***). Heat OAT Lockout (***Run Status→MODE→H.LOC***) displays when heat is locked out on outdoor temperature and therefore can not allow heat mode. The control will display if it is ok to select the heating mode (***Operating Modes→HEAT →OK.HT= Yes***).

Thermostat Control

For the unit to enter heating mode, three additional things must be true: the indoor fan must be ok to use, the mode changeover time guard must be expired, and there must be a heating demand (W1, W2). The unit will remain in heating until the heating demand is dropped or if any of the above conditions turn false. The heating mode can not officially end until all heat stages are off and the IGC fan request is dropped (on gas units).

Space Sensor Control

For the unit to enter heating mode, five additional things must be true: the indoor fan must be ok to use, the mode changeover time guard must be expired, the unit must have a valid space temperature, the W1 jumper must be installed, and there must be a heating demand. The unit will remain in heating for at least one minute and until the heat demand drops below -0.5°F or if any of the above conditions turn false. The heating mode can not officially end until all heat stages are off and the IGC fan request is dropped (on gas units without Humidi-MiZer).

Supply-Air Temperature Sensor (SAT)

The SAT Heat Mode Sensing (***Configuration →HEAT→SAT→SAT.H***) informs the unit if the supply air sensor has been relocated downstream of the heat section. This configuration affects the Supply Air Temperature (***Temperatures →AIR.T→SAT***) value displayed as listed below.

When SAT.H = DSBL, the Supply Air Temperature (***Temperatures →AIR.T→SAT***) value on the Scrolling Marquee and the CCN tables will be forced to zero when heat outputs turn ON or OFF and for 5 minutes after. The default Supply Air Temperature location is at the fan inlet, upstream of the heat section.

When SAT.H = ENBL, the Supply Air Temperature (***Temperatures →AIR.T→SAT***) sensor reading is displayed at the Scrolling Marquee and the CCN tables during heating mode. This setting should only be used if the original SAT sensor wires are removed from the Main Base Board (MBB) and replaced by an accessory SAT sensor located in the supply duct downstream of the heat section.

There are two supply air temperature limits that affect heating operation, the Maximum SAT Lower Level (***Configuration →HEAT→SAT→SAM.L***) the Maximum SAT Upper Level (***Configuration→HEAT→SAT→SAM.U***). Any time the supply air temperature rises above SAM.L the heat staging will be limited to what is currently on and no additional stages can be added until the supply air temperature falls back below SAM.L. If the supply air temperature rises above SAM.U, then heating will be reduced by removing a heat stage. That stage can not be added again until the Supply Air Temperature falls below SAM.L. If the supply air temperature stays above SAM.U, then another stage will be removed after the Heat Stage Decrease Time (***Configuration →HEAT→H.DEC***). If SAM.L and SAM.U are configured so that they are close together, the last stage of heat might cycle rapidly, slowed only by its minimum on and off-time requirements.

Staging Control

Once the unit is in a heating mode, it must decide what the demand is and how to satisfy. Based on the unit control configuration, requested heating stages (***Run Status→HEAT→REQ.H***) will be determined then passed to heat control to actually add the heating stages.

Thermostat Control

There are two ways of requesting stages when thermostat control is enabled: Traditional Thermostat control or Adaptive control. Traditional Thermostat control is used if the Thermostat Control Type (T.CTL) is set to 1, 2, or 3. Adaptive control is used if Thermostat Control (T.CTL) is set for 0.

T.CTL = 0 (Adaptive Control)

Stage timers and supply air temperature limits apply when determining the request for stages. The first request (REQ.C=1) comes immediately when the W1 input is active. The Heat Stage Increase Time (***Configuration→HEAT→H.INC***) or the Heat Stage Decrease Time (***Configuration→HEAT→H.DEC***) has to expire before another stage can be added or a stage can be subtracted. If at any time the Supply-Air Temperature (SAT) rises above the Maximum Supply Air Temperature Lower Level (***Configuration→HEAT→SAT→SAM.L***), the requested stages will not be allowed to increase. If at any time the SAT rises above the Maximum Supply Air Temperature Upper Level (***Configuration→HEAT→SAT→SAM.U***), the requested stages will be reduced by one without honoring H.DEC.

T.CTL = 1, 2 or 3 (Traditional thermostat control)

Stage timers and supply air temperature limits do not apply when determining the request for stages. Request staging will follow the thermostat inputs directly. W1 will request one stage. W2 will request all stages.

Space Sensor Control

Space sensor staging control is an adaptive anticipation control that weighs the actual space demand against the trend of that demand. It also honors stage time guards and supply air limits. The demand for heating in the space is displayed as the Heating Demand (***Run Status→HEAT→DMD.H***). The control tries to anticipate the change in the space because of its current stage status. This anticipation is based on the Heat Demand Trend (***Operating Modes →HEAT→TRD.H***). This trend will show the control how the space is reacting to the current running conditions and help it decide when to add or remove one stage from the requested stages. The Heat Stage Increase Time (***Configuration→HEAT→H.INC***) or the Heat Stage Decrease Time (***Configuration→HEAT →H.DEC***) has to expire before another stage can be added or a stage can be subtracted. If at any time the Supply-Air Temperature (SAT) rises above the Maximum Supply Air Temperature Lower Level (***Configuration→HEAT→SAT→SAM.L***), the requested stages will not be allowed to increase. If at any time the SAT rises above the Maximum Supply Air Temperature Upper Level (***Configuration→HEAT→SAT→SAM.U***), the requested stages will be reduced by one without honoring H.DEC.

Heat Relay Control

The heat relay control is responsible for energizing or de-energizing the MBB's heat stage relays and works hand in hand with the staging control. As the staging control requests stages, the heat relay control determines what actual heat relays are available or energized and tries to provide stages for what is requested. The availability of a heat relays depends on heat being installed, how many stages, and time guards. The type of Heat Installed (***Configuration→HEAT→HT.TY***) must be set for gas or electric for any stages to be available. The Number of Heat Stages (***Configuration→HEAT→N.HTR***) configuration tells the control how many heat relays can be used. Heat Stage 1Timeguard (***Run Status→HEAT→TG.H1***) and Heat Stage 2 Timeguard (***Run Status→HEAT→TG.H2***) display the time a respective heat relay has before it is available for use. The available stages at any given time are displayed as Available Heating Stages (***Run Status →HEAT→AVL.H***). The actual heat relays on at any given time are displayed as Actual Heating Stages (***Operating Modes→HEAT →ACT.H***). Heat Stage 1 Relay (***Run Status→HEAT→HT.1***) and Heat Stage 2 Relay (***Run Status→HEAT→HT.2***) are displayed on when the respective relay is energized. There are time guards to protect from short cycling, Heat Minimum On Time (***Configuration→HEAT→MRT.H***) and Heat Minimum Off Time (***Configuration→HEAT→MOT.H***) apply before a heat relay can be turned back on or turned off.

Integrated Gas Controller (IGC)

The heat staging is determined as described above and the Integrated Gas Controller (IGC) initiates the gas heat module start-up. The Integrated Gas Controller (IGC) minimum on-time of 1 minute will be followed even if Heat Minimum On Time (***Configuration→HEAT→MRT.H***) is lower and during Service Test. If the IGC temperature limit switch opens within 10 minutes of the end of the gas heat cycle, the next fan off delay will be extended by 15 seconds. The maximum delay is 3 minutes. Once modified by the IGC, the fan off delay will not change back to the configured Fan-off Delay, Gas Heat (***Configuration→HEAT →FOD.G***) unless power is reset to the control. A light emitting diode (LED) is provided on the IGC to indicate status. During normal operation the LED is continuously on. See the Troubleshooting section if the LED is off or flashing. The IGC is located behind the gas section access panel door.

When the control energizes Heat Stage 1 Relay (***Run Status →HEAT→HT.1***), power is sent to the W terminal on the IGC board. A check is made to ensure that the rollout switch and limit switch are closed. The induced-draft motor is then energized, and when speed is proven with the Hall Effect sensor on the motor, the ignition activation period begins. The burners will ignite within 5 seconds. If the burners do not light, there is a 22-second delay before another 5-second attempt. If the burners still do not light, this sequence is repeated for 15 minutes. After the 15 minutes have elapsed, if the burners still have not lit, heating is locked out. The control will reset when the request for heat is temporarily removed. When ignition occurs, the IGC board will continue to monitor the condition of the rollout switch, limit switches, the Hall Effect sensor, as well as the flame sensor. If the unit is controlled through a room thermostat or space sensor set for fan auto, 45 seconds after ignition occurs the indoor-fan motor will be energized (and the outdoor-air dampers will open to their minimum position). If for some reason the over temperature limit opens prior to the start of the indoor fan blower, on the next attempt, the 45-second delay will be shortened to 5 seconds less than the time from initiation of heat to when the limit tripped. Gas will not be interrupted to the burners and heating will continue. Once modified, the fan on delay will not change back to 45 seconds unless power is reset to the control. When the control energizes Heat Stage 2 Relay (***Run Status→HEAT→HT.2***), power is supplied to the second stage of the main gas valve. If both stage 1 and stage 2 of the gas valve close, gas will be turned off to the main burners.

Economizer

If an economizer is installed, then Economizer Installed (***Configuration→ECON→EC.EN***) should be set to YES. The economizer damper is controlled by the Econo Commanded Position (***Outputs→ECON→EC.CP***) on the Economizer Control Board (ECB). Feed back from the economizer actuator is output to the ECB and is displayed as Econo Actual Position (***Outputs →ECON→EC.AP***). The Economizer is used for ventilation, cooling and to control the power exhaust. If the Indoor fan is not on, the economizer will not operate.

Economizer Actuator Communication

The economizer actuator used with the 48/50HC units is a Multi-Function Technology (MFT) actuator. This allows the ComfortLink system to communicate with the actuator digitally using Belimo MP protocol. The configuration Economizer Control Type (***Configuration→ECON→E.CTL***) determines the communication method, either digital or analog, used to communicate between the Economizer Control Board and the economizer actuator.

NOTE: The power to the unit must be cycled after the Economizer Control Type (***Configuration→ECON→E.CTL***) configuration parameter is changed.

E.CTL = 1 or 2 (Digital/Position or Digital/Command)

When Economizer Control Type (***Configuration→ECON →E.CTL***) is set to 1, the Economizer Control Board will communicate with the economizer actuator using the digital protocol, from Economizer Control Board plug J7-1 to actuator pin 5. The commanded position and the actuators actual position are communicated back and forth between the actuator and the Economizer Control Board. When the Economizer Control Board and actuator first initiate communication, a Control Angle (***Operating Modes→ECON→C.ANG***) is provided to the Economizer Control Board and defines the actuator's range of motion. The control angle must be greater than the Min Actuator Ctrl Angle (***Configuration→ECON→M.ANG***). During this digital control, the Economizer Control Board analog 4 to 20 mA output will represent the actuator's actual position when E.CTL = 1 or commanded position when E.CTL =2. Because the wiring has a built-in 500-ohm resistor, the 4 to 20mA signal is converted to a 2 to 10VDC signal at the actuator.

E.CTL = 3 (Analog Control)

When E.CTL is set to 3, the Economizer Control Board will NOT communicate with the actuator using digital MFT. It will instead control the economizer actuator directly with the 4 to 20mA analog signal wired with the 500-ohm resistor producing a 2 to 10VDC signal for the actuator. While in this mode, the actuator's built-in 2 to 10VDC feedback signal can be read as actual position any time because it is not used by the Economizer Control Board.

Minimum Ventilation

The economizer will open to allow ventilation when the indoor fan is turned on and the unit is in the occupied state. The economizer damper position at any given time for ventilation is displayed as the Min Position in Effect (***Run Status→ECON→EC.MP***). This minimum position can be effected by the indoor fan speed (F.SPD) and indoor air quality. On single speed units, the economizer minimum position will be equal to the ECON MIN at MAX Fan Speed (***Configuration→ECON→MP.MX***) unless Indoor air quality requests something different.

On Staged Air Volume (SAV) units, to maintain a constant airflow through the economizer, as the indoor fan speed decreases or increases, the damper minimum position will increase or decrease, respectively. This relationship curve is shown in Fig. 6.

Units can also be equipped with optional CO_2 sensors for additional indoor air quality control. When unit is equipped with a return duct CO_2 sensor or return duct CO_2 sensor and outside air CO_2 sensor the Economizer minimum position will be recalculated based on the CO_2 level of the return and/or outside air. On SAV units the fan speed will also be used in recalculating minimum position, as shown in Fig. 6. When the Commanded Fan Speed (F.SPD) is less than the Supply Fan Maximum Speed (FS.MX) the damper will operate in the shaded area of Fig. 6 based on the IAQ Level (IAQ). See the Indoor Air Quality (IAQ) section for more details on Demand Control Ventilation (DCV).

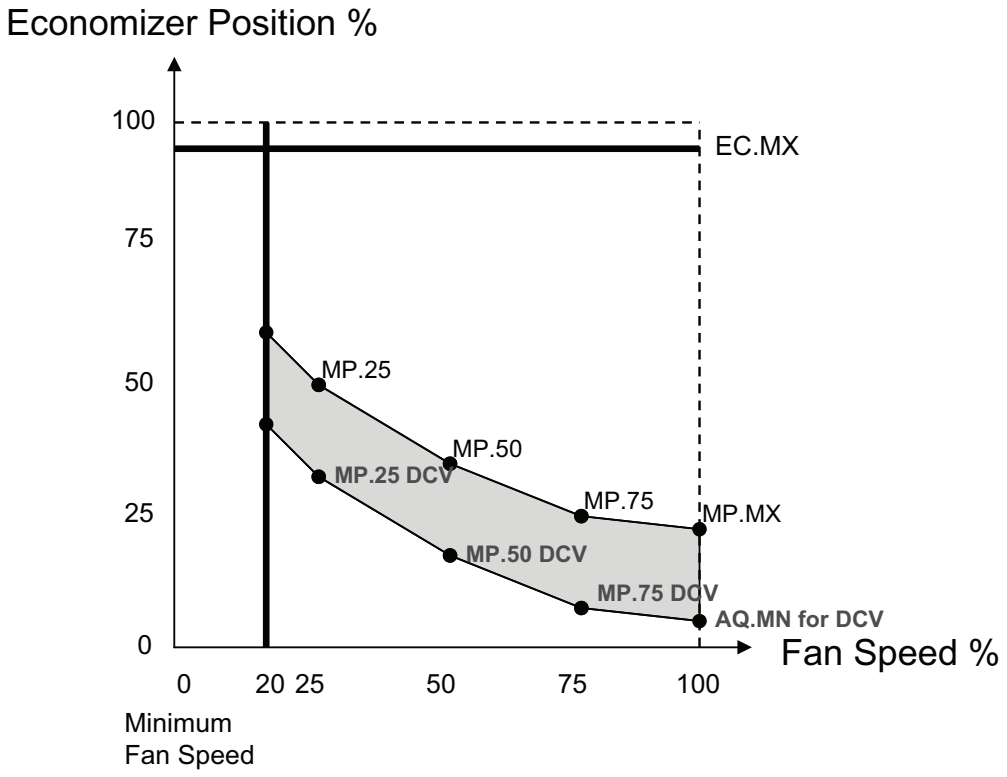

C11544

Fig. 6 - Minimum Damper Position Curve (on units with multiple fan speeds)

The shape of the Economizer Minimum Position vs. Fan Speed curve is determined by the configuration parameters: Econ Min at 25% Fan speed (***Configuration→ECON→MP.25***), Econ Min at 50% Fan speed (***Configuration→ECON→MP.50***), Econ Min at 75% Fan speed (***Configuration→ECON→MP.75***) and Econ Min at Max Fan speed (***Configuration→ECON→MP.MX***). These configurations are preset at the factory for default purposes. The Econ Min at Max Fan Speed (MP.MX) should be changed based on the air balance of the unit for proper ventilation. The Econ Min at 25% Fan speed (MP.25), Econ Min at 50% Fan speed (MP.50) and Econ Min at 75% Fan speed (MP.75) damper positions will be calculated and changed automatically after changing the Econ Min at Max Fan Speed (MP.MX) and Supply Fan Maximum Speed (***Configuration→I.FAN→FS.MX***).

The damper position curve can be field adjusted per application, if needed. The Econ Min at 25% Fan speed (***Configuration →ECON→MP.25***), Econ Min at 50% Fan speed (***Configuration →ECON→MP.50***) and Econ Min at 75% Fan speed (***Configuration→ECON→MP.75***) damper position are user configurable and can be determined by setting the fan speed at 25, 50 and 75% and determining the damper position required to maintain the Econ Min at Max Fan Speed (***Configuration →ECON→MP.MX***) outside air CFM through the economizer outside air dampers. The default calculations programmed into the HC controls are based on a side shot economizer at 400 CFM/TON Supply Air flow with negative 0.25 in H2O pressure in the return duct. Econ Min at Max Fan Speed (FS.MN) is set by user based on minimum required outside air ventilation CFM required for the application. This procedure would be the same as if this were a CV unit with the unit running at the design point CFM. This determines the minimum position amount of outside air CFM required when the fan is running at maximum speed.

Free Cooling

The economizer will be allowed to help with cooling (***Run Status →MODE→OK.EC = Yes***) if the supply air temperature sensor reading is valid, there are no applied lockouts, and there is not a dehumidification demand. There are four economizer lockouts that can be applied at any time. Econo Cool OAT Lockout (***Operating Modes→ECON→E.LOC***) occurs when the Outdoor Air Temperature (OAT) is greater than the configured Econo Cool Hi Temp Limit (***Configuration→ECON→EH.LO***) or less than the configured Econo Cool Lo Temp Limit (***Configuration→ECON →EL.LO***). Econo Diff DBulb Lockout (***Operating Modes→ ECON→D.LOC***) occurs when Diff Dry Bulb Control is enabled (***Configuration→ECON→DF.DB = Enable***) and the accessory return air temperature (RAT) is lower then the outdoor air temperature (OAT). Econo Cool Enth Lockout (***Operating Modes→ECON →EN.LO***) occurs when an enthalpy sensor is installed and the Outdoor Enthalpy is HIGH. OAQ Lockout Mode (***Operating Modes→ECON→AQ.LO***) occurs when the outdoor air quality sensor is configured for lockout and the value is greater then the OAQ Lockout Limit (***Configuration→AIR.Q→OAQ.L***). Any one of these lockouts will disable economizer free cooling.

Thermostat Control

If the unit is in cooling, operating under thermostat control, Y1 = ON, and the economizer is available for cooling, the economizer will control the supply-air temperature to the low cool set point (***Setpoints→LCSP***). When Y2 = ON, the economizer will control the supply-air temperature to high cool set point (***Setpoints→HCSP***).

Space Sensor Control

If the unit is in cooling, operating under space temperature control, the economizer is available for cooling, and no compressors are operating, the economizer will control the SAT to either ***Setpoints→LCSP*** or ***Setpoints→HCSP*** (See Table 5.) If a compressor is ON, the economizer will be at the economizer maximum cooling position (***Configuration→ECON→EC.MX***).

If the control senses low suction pressure for any active refrigerant circuit when the economizer is also providing cooling, the maximum allowable economizer position will be reduced. Factory default configurations have been qualified over a large range of conditions and should only be changed with care. For unit troubleshooting, factory default maximum economizer limits for this condition are provided in Table 6.

Table 5 – LCSP and HCSP Transitions for Space Temperature Mode

CURRENT SAT SET POINT	COOL DEMAND (ΔF)	NEXT SAT SET POINT
LCSP	>0.5	HCSP
HCSP	<0	LCSP
LCSP	<–0.5	Exit Cooling

LEGEND
HCSP – High Cool Set Point
LCSP – Low Cool Set Point
SAT – Supply–Air Temperature

Table 6 – Maximum Economizer Limits During Low Suction Pressure

COOLINGSTAGE	SIZES 03–14	SIZES 17–28
Bottom	50	50
Top	25	0

Unoccupied Free Cooling

The unoccupied free cooling algorithm attempts to maintain the building space half way between the Occupied Cool Set Point (***Setpoints→OCSP***) and Occupied Heat Set Point (***Setpoints→OHSP***) using only the economizer when the conditions in the building and the outdoors are suitable, during unoccupied periods. Three different configurations define this algorithm: Unoccupied Free Cooling (***Configuration→ECON→UEFC***), Free Cooling Preoccupancy Time (***Configuration→ECON→FC.TM***), and Free Cool Low Temp Limit (***Configuration→ECON→FC.LO***).

UEFC = 0 (Disabled)

When UEFC = 0, unoccupied free cooling is disabled. Cooling will only occur if the space exceeds the unoccupied setpoints.

UEFC = 1 (Unoccupied)

When UEFC is set to 1, unoccupied free cooling can occur throughout the entire unoccupied period. The space temperature must be higher than the mid-point between the occupied cooling and heating setpoints.

UEFC = 2 (Preoccupancy)

When UEFC is set to 2, unoccupied free cooling can only occur when the time until the next occupied period is less than the Free Cool PreOcc Time (FC.TM) in minutes.

Free Cool PreOcc Time (FC.TM)

FC.TM is the configuration that determines how many minutes before occupancy that free cooling can occur when set for Preoccupancy (UEFC = 2).

Free Cool Low Temp Limit (FC.LO)

Unoccupied free cooling cannot occur if the Outdoor Air Temperature (***Temperature→AIR.T→OAT***) is less than FC.LO.

Power Exhaust (SAV units)

To enable power exhaust, ***Configuration→ECON→PE.EN*** must be set to ***ENBL***. If power exhaust is enabled, Power Exhaust 1 will turn on when the economizer position is greater than the value of ***Configuration→ECON→PE.1***. Power Exhaust 2 will turn on when the economizer position is greater than the value of ***Configuration→ECON→PE.2***. There are small time delays to ensure that rapid cycling does not occur.

Power Exhaust (multiple fan speed units)

To enable power exhaust, set Power Exhaust Installed (***Configuration→ECON→PE.EN***) to YES. Both power exhaust fans are wired together and are controlled by the configuration Power Exhaust Stage1 CFM (***Configuration→ECON→PE1.C***). When the Indoor Fan Max Speed CFM (***Configuration→ECON →IDF.C***) is set to the correct supply duct CFM (either by fan tables or air balance report) the control will calculate the outside air CFM based on outside air damper position and Commanded Fan Speed (***Outputs→FANS→F.SPD***) to turn on the power exhaust when the calculated outside air CFM reaches Power Exhaust Stage1 CFM (PE1.C). The power exhaust will then turn off when the calculated outside air CFM falls below Power Exhaust Stage1 CFM (PE1.C). The Power Exhaust Stage2 CFM (***Configuration →ECON→PE2.C***) is not currently used on these products.

Indoor Air Quality (IAQ)

The *Comfort*LINK control has the capability for several methods of demand ventilation control. Indoor air quality is typically measured using a CO_2 sensor whose measurements are displayed in parts per million (ppm). Outdoor air quality may be measured with a CO_2 sensor for indoor-outdoor differential demand ventilation control, or with other sensor types for the outdoor air lockout function. The factory-installed indoor air quality CO_2 sensor is mounted in the return section. A field-installed indoor air quality CO_2 sensor may be mounted in the return duct or directly in the occupied space, per job requirements. The indoor air quality modes of operation can be affected by configurations for indoor air quality sensor (***Configuration→AIR.Q→IA.CF***), indoor air quality switch (***Configuration→AIR.Q→II.CF***), outdoor air quality sensor (***Configuration→AIR.Q→OA.CF***) and other related fan and limit configurations as described below.7

IAQ (Analog Input)

The *Comfort*Link control is configured for indoor air quality sensors which provide 4 to 20 mA signal for 0 to 2000 ppm CO_2. If the sensor being used has a different range, the ppm display range must be reconfigured by entering new values for the IAQ Sensor Value at 4mA (***Configuration→AIR.Q→I.4M***) and IAQ Sensor Value at 20mA (***Configuration→AIR.Q→I.20M***).

IA.CF = O (No IAQ)

IA.CF = 0 signifies that there is no IAQ sensor installed. The damper will operate at the Econ Min at Max Fan Speed (***Configuration→ECON→MP.MX***) when the fan is at Supply Fan Maximum Speed (***Configuration→I.FAN→FS.MX***) and the damper position will vary at other fan speeds as described in the Economizer section, when the space is occupied and the indoor fan is on.

IA.CF = 1 (DCV)

When IA.CF = 1, the IAQ algorithm is set for Demand Control Ventilation (DCV). During DCV, the damper modulates between two user configurations depending upon the relationship between the Indoor Air Quality (IAQ) and the Outdoor Air Quality (OAQ). The lower of these two positions is referred to as the Econo Min IAQ Position (***Configuration→AIR.Q→AQ.MN***), while the higher is referred to as the Econ Min at Max Fan Speed (***Configuration→ECON→MP.MX***). The Econo Min IAQ Position (AQ.MN) should be set to an economizer position that brings in enough fresh air to remove contaminates and CO_2 generated by sources other than people. The Econ Min at Max Fan Speed (MP.MX) should be set to an economizer position that brings in fresh air to remove contaminates and CO_2 generated by all sources including people when the indoor fan is operating at the Supply Fan Maximum Speed (***Configuration→I.FAN→FS.MX***). The Econ Min at Max Fan Speed (MP.MX) value is the design value for maximum occupancy.

The *Comfort*Link control will begin to open the damper from the Econo Min IAQ Position (AQ.MN) position when the IAQ level begins to exceed the Outdoor Air Quality (OAQ) level by a configurable amount. This amount is referred to as AQ Differential Low (***Configuration→AIR.Q→AQD.L***). When the differential between IAQ and OAQ reaches AQ Differential High (***Configuration→AIR.Q→AQD.H***), the economizer position will be at the Econ Min at Max Fan Speed (MP.MX) when the indoor fan speed is at Supply Fan Maximum Speed (FS.MX). When the IAQ/OAQ differential is between AQ Differential Low (AQD.L) and AQ Differential High (AQD.H), the control will modulate the damper between Econ Min at Max Fan Speed (MP.MX) and Econo Min IAQ Position (AQ.MN) in a linear manner as shown in Fig. 7. At other fan speeds the economizer damper will operate in the shaded area between the two economizer position curves but at the actual fan speed as indicated by Commanded Fan Speed (***Outputs →FANS→F.SPD***). (See Fig. 6.)

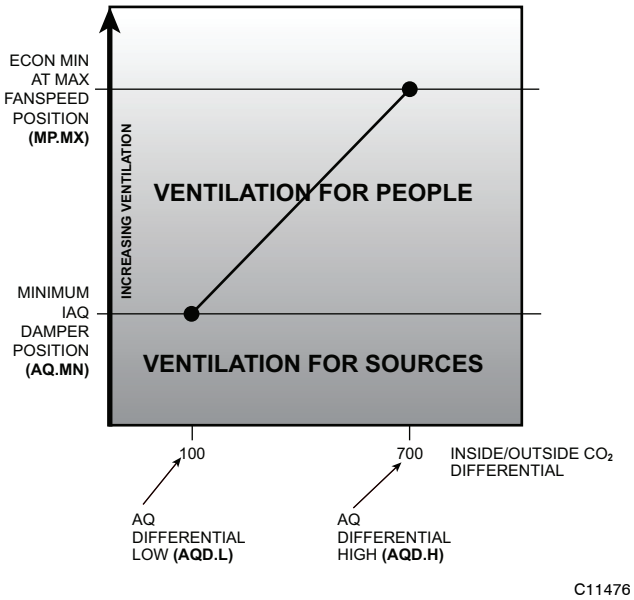

Fig. 7 - Economizer Minimum Position

IA.CF = 2 (Override IAQ)

When IA.CF = 2, the IAQ algorithm maintains the damper at Econ Min at Max Fan Speed (***Configuration→ECON→MP.MX***) when the indoor fan speed is at Supply Fan Maximum Speed (***Configuration→I.FAN→FS.MX***) or along the curve on Fig. 6 when the indoor fan speed is at the Commanded Fan Speed (***Outputs→FANS→F.SPD***) until the override condition triggers. The override triggers when the IAQ/OAQ differential is greater than AQ Differential High (***Configuration→AIR.Q→AQD.H***). The IAQ Override Position (***Configuration→AIR.Q→OVR.P***) sets the damper position during override. The economizer damper will return to the Econ Min at Max Fan Speed (MP.MX) or MP.MX curve at other fan speeds when the IAQ/OAQ differential is less than the AQ Differential Low (***Configuration→AIR.Q→AQD.L***).

The override algorithm will operate whenever the building is occupied and the indoor fan is operating or whenever the IAQ algorithm has caused the indoor fan to operate. The IAQ Analog Fan Config (***Configuration→AIR.Q→IA.FN***) determines whether or not the IAQ algorithm can turn on the indoor fan. If the indoor fan is not operating, the economizer position will be zero. If the override is not active and the building is unoccupied, the economizer position will be zero. The damper position may exceed Econ Min at Max Fan Speed (MP.MX) or IAQ Override Position (OVR.P) to provide economizer cooling.

IA.CF = 3 (Control Minimum Position)

When IA.CF = 3, an external 4 to 20 mA source is used to set the minimum position. The 4mA signal corresponds to 0% and the 20 mA signal corresponds to 100%. In this mode, configurations such as Econ Min at Max Fan Speed (***Configuration→ECON →MP.MX***), Econo Min IAQ Position (***Configuration→AIR.Q →AQ.MN***) and the economizer minimum position and DCV minimum position curves in Fig. 6 and 7 are not used. If the indoor fan is not operating, the economizer position will be zero. The damper position may exceed the economizer minimum position to provide economizer cooling.

IAQ (Switch Input)

Indoor air quality can also be measured using a switch input. For the purpose of specifying the type of switch input, low CO_2 levels are considered normal. The IAQ switch input is defined by the IAQ Switch Input Config (***Configuration→AIR.Q→II.CF***). Enthalpy and IAQ are controlled by the same switch input and therefore cannot be used simultaneously.

II.CF = 0 (No IAQ)

The II.CF = 0 configuration signifies that there is no IAQ switch input. The damper will operate at the Econ Min at Max Fan Speed (***Configuration→ECON→MP.MX***) and corresponding damper position curve based on indoor fan speed when the space is occupied and the indoor fan is on.

II.CF = 1 (DCV Normally Open) or II.CF = 2 (DCV Normally Closed)

The Demand Control Ventilation (DCV) allows the economizer minimum position to be decreased when there is no IAQ problem. If IAQ is low, the economizer minimum position is Econo Min IAQ Position (***Configuration→AIR.Q→AQ.MN***) when the indoor fan is operating at Supply Fan Maximum Speed (***Configuration →UNIT→FS.MX***). If IAQ is high, the economizer minimum position is Econ Min at Max Fan Speed (***Configuration→ECON →MP.MX***) when the indoor fan is operating at Supply Fan Maximum Speed (FS.MX). If the fan speed is modulating, see Fig. 6 for higher or lower damper position setting at the specific fan speed.

II.CF = 3 (Override Normally Open) or II.CF = 4 (Override Normally Closed)

The damper override function permits absolute positioning of the economizer damper for ventilation purposes. The override is active when IAQ is high and inactive when IAQ is low. The override position is configured by the IAQ Override Position (***Configuration→AIR.Q→OVR.P***).

Outdoor Air Quality (Analog Input)

The *Comfort*Link control can be configured for outdoor air quality sensors which provide a 4 to 20 mA signal corresponding to 0 to 2000 ppm CO_2. If a field supplied sensor has a different range, the ppm display range must be reconfigured by entering new values for the OAQ Sensor Value at 4mA (***Configuration→AIR.Q →O.4M***) and OAQ Sensor Value at 20mA (***Configuration →AIR.Q→O.20M***).

OA.CF = 0 (No OAQ)

This signifies that there is no outdoor air sensor installed. The default value of OAQ is 400 ppm CO_2 when using demand control ventilation (DCV).

OA.CF = 1 (DCV)

The outdoor air quality sensor analog input is the value of OAQ for demand control ventilation (DCV).

OA.CF = 2 (OAQ Lockout)

The outdoor air quality analog input is only used to lock out the outdoor ventilation. The economizer commanded position is set to 0% when the CO_2 ppm exceeds the OAQ lockout value configured for the OAQ Lockout Limit (***Configuration→AIR.Q →OAQ.L***). The default value for OAQ Lockout Limit (***OAQ.L***) is 600 ppm CO_2.

Fan Enable (Analog IAQ Sensor)

The DCV algorithm will operate whenever the building is occupied and the indoor fan is operating or whenever the IAQ algorithm has caused the indoor fan to operate. The IAQ Analog Fan Config (***Configuration→AIR.Q→IA.FN***) determines whether or not the IAQ algorithm can turn on the indoor fan. If the indoor fan is not operating, the economizer position will be zero. The damper position may exceed Econ Min at Max Fan Speed (***Configuration→ECON→MP.MX***) and corresponding damper position curve to provide economizer cooling.

IA.FN = 0 (Never)

When IA.FN = 0, the IAQ algorithm can never turn on the fan.

IA.FN = 1 (Occupied)

When IA.FN =1, the IAQ algorithm will turn on the indoor fan whenever the building is occupied and IAQ/OAQ differential is greater than the Fan On AQ Differential (***Configuration→AIR.Q →DF.ON***). The indoor fan will turn off when the IAQ/OAQ differential is less than the Fan Off AQ Differential (***Configuration →AIR.Q→DF.OF***).

IA.FN = 2 (Always)

The indoor fan operation for IA.FN = 2, is the same as the operation when IA.FN =1, except the algorithm is not limited to the occupied periods only. The fan can be triggered on when the space is occupied or unoccupied.

Fan Enable (Switch Input)

The DCV algorithm will operate whenever the building is occupied and the indoor fan is operating or whenever the IAQ algorithm has caused the indoor fan to operate. The IAQ Switch Fan Config (***Configuration→AIR.Q→II.FN***) determines whether or not the IAQ algorithm can turn on the indoor fan. If the indoor fan is not operating, the economizer position will be zero. The damper position may exceed Econ Min at Max Fan Speed (***Configuration→ECON→MP.MX***) and corresponding damper position curve to provide economizer cooling.

II.FN = 0 (Never)

When the II.FN = 0, the IAQ algorithm can never turn on fan.

II.FN = 1 (Occupied)

When II.FN =1, the IAQ algorithm will turn on the indoor fan whenever the building is occupied and IAQ is high. The indoor fan will turn off when the IAQ returns to normal.

II.FN = 2 (Always)

The indoor fan operation for II.FN =2 is the same as the operation when IA.FN =1, except the algorithm is not limited to the occupied periods only. The fan can be triggered on when the space is occupied or unoccupied.

Optional Humidi-MiZer™ Dehumidification System

NOTE: Although the ComfortLink software (v1.x) and this document reference the Humidi-MiZer™, the factory installed Humidi-MiZer option is not available for EnergyX equipped 48/50HC 17-28 units as of this time.

Units with the factory-equipped Humidi-MiZer option are capable of providing multiple modes of improved dehumidification as a variation of the normal cooling cycle. The Humidi-MiZer option includes additional valves in the liquid line and discharge line of each refrigerant circuit, a reheat coil downstream of the evaporator, and Motormaster® variable-speed control of some or all outdoor fans. The Humidi-MiZer Equipped (***Configuration→HMZR→REHT***) configuration is factory set to Yes for Humidi-MiZer equipped units. This enables Humidi-MiZer operating modes and service test.

NOTE: If the unit is a Humidi-MiZer unit, this configuration must always be set to yes. The Humidi-MiZer option does affect the base unit wiring.

Humidi-MiZer operation requires installation and configuration of either a space relative humidity sensor or a relative humidity switch input. Space Humidity Switch (***Configuration→UNIT→RH.SW***) set to 1 for use of a normally open switch or 2 for normally closed switch. The switch is wired to field connection terminal board terminals labeled HUM. Set RH Sensor on OAQ Input (***Configuration→UNIT→RH.S***) to Yes for use of a 4 to 20 mA output RH sensor wired to field connection terminal board (TB) terminals SPRH and LPWR (for loop powered). RH Sensor Value at 4ma (***Configuration→AIR.Q→H.4M***) sets the % display for a 4mA input from the relative humidity sensor. RH Sensor Value at 20ma (***Configuration→AIR.Q→H.20M***) sets the % display for a 20mA input from the relative humidity sensor.

EnergyX

For units equipped with the EnergyX factory installed option, there will be an EnergyX Supplement Installation Instructions in the unit's information packet. Refer to this supplement for details on how the ERV operates relative to the base unit.

Temperature Compensated Start

This logic is used when the unit is in the unoccupied state. The control will calculate early Start Bias time based on Space Temperature deviation from the occupied cooling and heating set points. This will allow the control to start the unit so that the space is at conditioned levels when the occupied period starts. This is required for ASHRAE 90.1 compliance. A space sensor is required for non-linkage applications.

Setting Up the System

The settings for temperature compensated start can be found in the local display under ***Configuration→UNIT***.

ITEM	EXPANSION	RANGE	UNITS	CCN POINT
TCS.C	Temp.Cmp.Strt.Cool Factr	0 - 60	min	TCSTCOOL
TCS.H	Temp.Cmp.Strt.Heat Factr	0 - 60	min	TCSTHEAT

Temp Comp Strt Cool Factr (TCS.C)

This is the factor for the start time bias equation for cooling.

Temp Comp Strt Heat Factr (TCS.H)

This is the factor for the start time bias equation for heating.

NOTE: Temperature compensated start is disabled when these factors are set to 0.

Temperature Compensated Start Logic

The following conditions must be met for the algorithm to run:

- Unit is in unoccupied state.
- Next occupied time is valid.
- Current time of day is valid.
- Valid space temperature reading is available (sensor or CCN network).

The algorithm will calculate a Start Bias time in minutes using the following equations:

If (space temperature > occupied cooling set point)

Start Bias Time = (space temperature – occupied cooling set point)* ***TCS.C***

If (space temperature < occupied heating set point)

Start Bias Time = (occupied heating set point – space temperature)****TCS.H***

When the Start Bias Time is greater than zero the algorithm will subtract it from the next occupied time to calculate the new start time. When the new start time is reached, the Temperature Compensated Start mode is set, the fan is started and the unit controlled as in an occupied state. Once set, Temperature Compensated mode will stay on until the unit goes into the Occupied mode. The Start Bias Time will be written into the CCN Linkage Equipment Table if the unit is controlled in DAV mode. If the Unoccupied Economizer Free Cool mode is active when temperature compensated start begins, the Unoccupied Free Cool mode will be stopped.

NOTE: The maximum minutes Start Bias can be is 180.

Carrier Comfort Network (CCN)® Configuration

It is possible to configure the *Comfort*Link control to participate as an element of the Carrier Comfort Network (CCN) system directly from the local display. This section will deal with explaining the various programmable options which are found under the CCN sub-menu in the Configuration mode.

The major configurations for CCN programming are located in the local displays at ***Configuration→CCN***. See Appendix A.

CCN Address (CCN.A)

This configuration is the CCN address the rooftop is assigned.

CCN Address (CCN.B)

This configuration is the CCN bus the rooftop is assigned.

CCN Baud Rate (BAUD)

This configuration is the CCN baud rate.

CCN Time/Date Broadcast (BROD→B.TIM)

If this configuration is set to ON, the control will periodically send the time and date out onto the CCN bus once a minute. If this device is on a CCN network then it will be important to make sure that only one device on the bus has this configuration set to ON. If more than one time broadcaster is present, problems with the time will occur.

NOTE: Only the time and date broadcaster can perform daylight savings time adjustments. Even if the rooftop is stand alone, the user may want to set this to ON to accomplish the daylight/savings function.

CCN OAT Broadcast (BROD→B.OAT)

If this configuration is set to ON, the control will periodically broadcast its outside-air temperature at a rate of once every 30 minutes.

Global Schedule Broadcast (BROD→B.GS)

If this configuration is set to ON and the schedule number (***SCH.N***) is between 65 and 99, then the control will broadcast the internal time schedule once every 2 minutes.

CCN Broadcast Acknowledger (BROD→B.ACK)

If this configuration is set to ON, then when any broadcasting is done on the bus, this device will respond to and acknowledge. Only one device per bus can be configured for this option.

Schedule Number (SCH.O→SCH.N)

This configuration determines what schedule the control may follow.

SCH.N = 0	**The control is always occupied.**
SCH.N = 1	**The control follows its internal time schedules. The user may enter any number between 1 and 64 but it will be overwritten to "1" by the control as it only has one internal schedule.**
SCH.N = 65–99	**The control is either set up to receive to a broadcasted time schedule set to this number or the control is set up to broadcast its internal time schedule (*B.GS*) to the network and this is the global schedule number it is broadcasting. If this is the case, then the control still follows its internal time schedules.**

Accept Global Holidays? (SCH.O→HOL.G)

If a device is broadcasting the time on the bus, it is possible to accept the time yet not accept the global holiday from the broadcast message.

Override Time Limit (SCH.O→OV.TL)

This configuration allows the user to decide how long an override occurs when it is initiated. The override may be configured from 1 to 4 hours. If the time is set to 0, the override function will become disabled.

Timed Override Hours (SCH.O→OV.EX)

This displays the current number of hours left in an override. It is possible to cancel an override in progress by writing "0" to this variable, thereby removing the override time left.

SPT Override Enabled? (SCH.O→OV.SP)

If a space sensor is present, then it is possible to override an unoccupied period by pushing the override button on the T55 or T56 sensor. This option allows the user to disable this function by setting this configuration to NO.

Demand Limit

Demand Limit Control may override the cooling algorithm to limit or reduce cooling capacity during run time. The term Demand Limit Control refers to the restriction of machine capacity to control the amount of power that a machine will use. This can save the owner money by limiting peaks in the power supply. Demand limit control is intended to interface with an external network system. This is through a CCN Loadshed POC Device or writing to network points.

To limit stages through network writes, the points ***Run Status →COOL→MAX.C*** and ***Run Status→HEAT→MAX.H*** are forced on the network through CCN points MAXCSTGS and MAXHSTGS respectively. Force these to the desired maximum stages of cooling/dehumidification and heating, respectively. When there is no force on these points, they automatically reset to allow all cooling/dehumidification and heating stages to be used. These points are reset at power-on/reset (POR).

When using the Loadshed POC to do Demand Limiting, the cool and heat stage limits under both Redline and Loadshed conditions can be set individually with configuration decisions. If the active stages is greater then the loadshed or redline configurations when a loadshed or redline command is given, the unit will remove stages.

Configuration→CCN→LDSH→S.GRP

This is the Loadshed Group Number and corresponds to the loadshed supervisory devices that resides elsewhere on the CCN network and broadcasts loadshed and redline commands to its associated equipment parts. This variable will default to zero which is an invalid group number. This allows the loadshed function to be disabled until configured.

Configuration→CCN→LDSH→R.MXC

This configuration tells the unit the maximum cooling stages allowed to be on during a redline condition.

Configuration→CCN→LDSH→S.MXC

This configuration tells the unit the maximum cooling stages allowed to be on during a loadshed condition.

Configuration→CCN→LDSH→R.MXH

This configuration tells the unit the maximum heating stages allowed to be on during a redline condition.

Configuration→CCN→LDSH→S.MXH

This configuration tells the unit the maximum heating stages allowed to be on during a loadshed condition.

The two Demand Limiting methods can be active simultaneously. The lowest cool and heat stage limits imposed by either method are applied, and these "effective stage limits" are shown in the points CSTGLIMT (***Run Status→COOL→LMT.C***) and HSTGLIMT (***Run Status→HEAT→LMT.H***), respectively. In normal running mode, these limits will prevent stages from being added, or stages to be removed, as applicable. In test mode, these limits are ignored, and the user may continue to operate all stages. The point MODEDMDL (***Run Status→MODE→D.LMT***) is used to show if any Demand Limiting is in effect that prevents the unit from operating either cooling or heating at full-capacity.

NOTE: MODEDMDL may reflect that staging is NOT limited even though Loadshed is active, or the network points are being forced, if the stage limits in effect are not less than the stages present in the unit.

If a more drastic mode of Demand Limiting is required, the network point HVACDOWN (***Run Status→MODE→HV.DN***) can be used to prohibit the unit from selecting any HVAC mode, thus preventing the operation of the supply fan, compressors, condenser fans, and heat stages. This point must also be forced, and is reset automatically when not forced, and at POR.

NOTE: HVACDOWN can be used as an immediate shutdown of the unit before limiting capacity (ex. Generator switching).

Linkage

*Comfort*Link controls do not require any configuration settings to establish linkage with a Linkage Coordinator. This is done automatically when the unit's bus and element address are configured in the Linkage Coordinator's LINKAGE configuration table. The linkage information that is supplied to the *Comfort*Link unit by the Linkage Coordinator is as follows:

- Reference zone temperature
- Reference zone occupied biased heating and cooling set points
- Reference zone unoccupied heating and cooling set points
- Composite occupancy mode

The unit will control the equipment based on this information and in return will provide the Linkage Coordinator with the following data:

- Operating mode - Cooling, Heating, Free Cooling, Fire Shutdown Evacuation, or Off
- Supply-air temperature
- Optimal Start Bias time (Based on worst case zone)

This synchronization of data optimizes the efficiency of the unit and the zones to operate at peak system performance at all times. This information can be seen in linkage maintenance tables of the Linkage Coordinator and the RTU; it is updated at approximately 1-minute intervals.

Cooling and heating operation is slightly modified during Linkage control. A PID loop is run to calculate required stages. This is necessary because in stand alone operation, the unit tries to anticipate the space. With Linkage, the unit must try to satisfy the demand as soon as possible. The PID configurations are in ***Configuration→PID***. These values have been field tested and the default values should NOT BE CHANGED.

For information on set up and configuration, see the Space Temperature Control-CCN Linkage text in the Controls Quick Start section of this book.

For additional information on the Linkage Coordinator or Zone Controllers, please refer to their appropriate manuals.

Alarm Handling

There are a variety of different alerts and alarms in the system. Alerts are indicated by TXXX (where XXX is the alert number) on the display and generally signify that the improperly functioning circuit can restart without human interaction. If an alarm occurs, indicated by AXXX (where XXX is the alarm number), the damaged circuit will generally not restart without an alarm reset via the Scrolling Marquee display or CCN.

The response of the control system to various alerts and alarms depends on the seriousness of the particular alert or alarm. In the mildest case, an alert does not affect the operation of the unit in any manner. An alert can also cause a "strike." A "striking" alert will cause the circuit to shut down for 15 minutes. This feature reduces the likelihood of false alarms causing a properly working system to be shut down incorrectly. If three strikes occur before the circuit has an opportunity to show that it can function properly, the circuit

will strike out, causing the shutdown alarm for that particular circuit. Once activated, the shutdown alarm can only be cleared via an alarm reset.

However, circuits with strikes will be given an opportunity to reset their strike counter to zero. As discussed above, a strike typically causes the circuit to shut down. Fifteen minutes later, that circuit will once again be allowed to run. If the circuit is able to run for 1 minute, its replacement circuit will be allowed to shut down (if not required to run to satisfy requested stages). However, the "troubled" circuit must run continuously for a user defined time (***Configuration→COOL→RST.C***) with no detectable problems before the strike counter will be reset to zero. Default value is 5 minutes.

CCN Alarm Broadcast

Operators of CCN networks might not want to be notified of "striking" alerts for refrigerant circuits until the circuit has been shut down due to 3 strikes. Set the cooling configuration of Alert Each Strike (***Configuration→COOL→ALM.N*** on display, ALM_NOW on CCN) to YES to broadcast each circuit strike alert. Set Alert Each Strike to NO to broadcast only circuit shut down. Alert Each Strike configuration is ignored during Service Test and all alerts are broadcast.

Alarm Relay Output

The alarm relay output is a normally open 24 vac output between field connection terminal board terminals C and X. Selection of which alerts and alarms will result in closing of the alarm relay may be set in the Alarm Relay Configuration (***Configuration→ALM.O***). Setting a configuration to YES will result in the alarm output relay, ***ALRM***, status of ON and 24 vac between C and X on the field connection terminal board when that particular condition is in an alarm state. Setting a configuration to NO will result in no action by the alarm output relay for that particular condition.

NOTE: An accessory filter switch can be used along with the alarm relay output function to indicate dirty filter service need.

See the Troubleshooting section for more information on viewing, diagnosing, and clearing alerts and alarms.

TROUBLESHOOTING

The Scrolling Marquee display shows the actual operating conditions of the unit while it is running. If there are alarms or there have been alarms, they will be displayed in either the current alarm list or the history alarm list. (See Table 7.) The Service Test mode allows proper operation of the compressors, fans, and other components to be checked while the unit is not operating. See Service Test.

Complete Unit Stoppage

There are several conditions that can cause the unit not to provide heating or cooling:

- If an alarm is active which causes the unit to shut down, diagnose the problem using the information provided in Alarms and Alerts section below.
- Cooling and heating loads are satisfied.
- Programmed occupancy schedule.
- General power failure.
- Tripped 24-volt transformer circuit breakers.
- Blown fuse or circuit breakers
- Unit is turned off through the CCN network.
- If supply-air temperature is less than the Minimum SAT Lower Level (***SAT.L***) configuration value, unit cannot cool.
- If outdoor-air temperature is less than the Compressor Lockout Temperature (***CA.LO, CB.LO***) configuration value, unit cannot cool.
- If outdoor-air temperature is greater than the Heating Lockout Temperature (***HT.LO***) configuration value, unit cannot heat.

Restart Procedure

Before attempting to restart the machine, check the alarm list to determine the cause of the shut down. If the shutdown alarm for a particular control function has occurred, determine and correct the cause before allowing the unit to run under its own control again. When there is problem, the unit should be diagnosed in Service Test mode. The alarms must be reset before the control function can operate in either Normal mode or Service Test mode.

Alarms and Alerts

Viewing and Clearing Unit Alarms

Presence of active alarms will be indicated on the Scrolling Marquee display by the Alarm Status light turning on and by the number of active alarms being displayed in the automatic View of Run Status. Presence of active alarms may also be signaled on the Alarm Output terminals. Each alarm may also be broadcast on the CCN network. Active alarms and past alarm history can be reviewed and cleared via the local display or a CCN device. The following menu locations are used for the local display:

Alarms→R.CURR (Reset All Current Alarms)

Change to YES to reset all active alarms. Turning unit power off will also reset all current alarms.

Alarms→R.HIST (Reset Alarm History)

Change to YES to reset the alarm history. Turning unit power off will not reset the alarm history.

Alarms→CURR (Currently Active Alarms)

Use the ENTER key, then scroll through any alarm numbers using the up and down arrow keys. Alarms are displayed in numerical order.

Alarms→HIST (Alarm History)

Use the ENTER key, then scroll through any alarm numbers using the up and down arrow keys. Up to 20 alarms are displayed in order of occurrence, with time and date.

The description for an alarm can be viewed on the Scrolling Marquee display by pressing ESCAPE and ENTER keys simultaneously while displaying the alarm code number. Be sure to expand description for each code, because in some cases there are different possible descriptions and causes for the same code number.

Diagnostic Alarm Codes and Possible Causes

Alert Codes T051 and T055

These alerts can only be activated if set to Diagnose Compressor Safety (C***onfiguration →COOL →D.CMP*** = Yes). There are 4 different texts for each alert code. There are two different alerts which have corresponding test mode alerts indicated with "Service Test" in the expanded text. Pressing enter and esc on the marquee or navigator to expand the T051 and T055 alert will show you one of the below alerts. Make sure the expanded text is read correctly before troubleshooting. Alert codes T051 and T055 are for compressors A1 and B1 respectively.

- Compressor Safety Trip

These alerts occur when the respective compressor has been running for 20 sec and the Saturated Suction Pressure (***Pressures →SSP.A or SSP.B***) reflects a change in compressor operation. A change in compressor operation is when the SSP changes more than the Maximum Suction Change configuration (***Configuration →COOL →MX.SA or MX.SB***) in a two second window while running the compressor and persists for 40 seconds. This alert can also occur when the respective compressor is diagnosed with a high pressure switch trip. A high pressure trip is when the compressor suction rises and falls two times within 2 minutes.

When this occurs, the control turns off the compressor and logs a strike for the respective circuit. These alerts reset automatically. The possible causes are: high-pressure switch (HPS) open, Condensate overflow switch (COFS) open, compressor internal

protection is open, or a wiring error (a wiring error might not allow the compressor to start). The HPS and optional COFS are wired in series with compressor relays on the MBB. If one of these opens during compressor operation, the compressor stops causing the control to activate this alert.

- Compressor Detected After Turnoff

These alerts occur when the respective compressor is turned off but the Saturated Suction Pressure (***Pressures →SSP.A or SSP.B***) does not reflect a shutdown. When shutting down a compressor suction pressure must rise more than Maximum Suction Change configuration (***Configuration →COOL →MX.SA or MX.SB***) within the first 10 seconds and stay above it. When this occurs, the control turns off all of the compressor relays, stays in cooling mode and keeps the indoor fan on. Use the Scrolling Marquee to reset the alert. The possible causes are a welded contactor, frozen compressor relay on MBB, or adverse conditions.

Alert Codes T064 and T065 – Circuit Saturated Condensing Temp Thermistor Failure

Alert codes T064 and T065 are for circuits A and B respectively. These alerts occur when the temperature is outside the range –40° to 240°F (–40° to 116°C). The cause of the alert is usually a faulty thermistor, a shorted or open thermistor caused by a wiring error, or a loose connection.

Alert Code T066 and T067 - Circuit Saturated Suction Temperature Thermistor Failure

Alert codes T066 and T067 are for circuits A and B respectively. These alerts occur when the unit's suction transducers are turned off internally. Cooling will not operate. This is usually due to a network force on a non exposed CCN point. Reload factory defaults or reinstall software on the MBB. Consult the network manager if alert continues.

Alert Code T073 - Outdoor Air Temperature Thermistor Failure

This alert occurs when the temperature is outside the range –40° to 240°F (–40° to 116°C). For all units, all ambient temperature lockout limits for cooling and heating are ignored. For economizer equipped units, the economizer will not operate to provide cooling. The economizer will still operate for ventilation. This alert resets automatically. The cause of the alert is usually a faulty thermistor, a shorted or open thermistor caused by a wiring error, or a loose connection.

Alert Code T074 - Space Temperature Thermistor Failure

This alert occurs when the temperature is outside the range –40° to 240°F (–40° to 116°C). This alert will only occur if the unit control type is configured for Space Sensor (versus Thermostat). Cooling and heating will not operate. For economizer equipped units, the economizer will still operate for ventilation. This alert resets automatically. The cause of the alert is usually a faulty thermistor in the T-55, T-56, or T-58 device, a shorted or open thermistor caused by a wiring error, or a loose connection.

Alert Code T075 - Supply Air Temperature Thermistor Failure

This alert occurs when the temperature is outside the range –40° to 240°F (–40° to 116°C). Economizer cooling and adaptive compressor staging cannot occur while this alarm is active. This alert resets automatically. The cause of the alert is usually a faulty thermistor, a shorted or open thermistor caused by a wiring error, or a loose connection.

Alert Code T076 - Return Air Thermistor Failure

This alert occurs when the temperature is outside the range –40° to 240°F (–40° to 116°C). This alert will only occur if the unit is configured for a return air sensor. Economizer differential dry bulb control will not be allowed during this alert. This alert resets automatically. The cause of the alert is usually a faulty thermistor, a shorted or open thermistor caused by a wiring error, or a loose connection.

Alert Code T077 - Space Relative Humidity Sensor Failure

This alert occurs when the input is less than 3.5 mA and the sensor is configured as installed. If a humidistat is not installed, then dehumidification will not be functional. Check sensor and wiring. This alert clears automatically.

NOTE: An ECB must be installed to use the space relative humidity sensor.

Alert Codes T092 and T093 – Circuit Suction Pressure Transducer Failure

Alert codes T092 and T093 are for circuits A and B respectively. These alerts occur when the board does not properly read the transducer voltage. A circuit cannot run when this alert is active. Use the Scrolling Marquee to reset the alarm. The cause of the alert is usually a faulty transducer, faulty 5-v power supply, or a loose connection.

Alert Codes T110 and T111 – Circuit Loss of Charge

Alert codes T110 and T111 are for circuits A and B respectively. These alerts have "Service Test" text that will be displayed if the alert occurred during service test. These alerts occur when the compressor is OFF and the suction pressure is less than 5 psig and OAT is greater than –5°F for 1 continuous minute. Use the Scrolling Marquee to reset the alert. The cause of the alert is usually low refrigerant pressure or a faulty suction pressure. These alerts only occur when the compressor is OFF because the low refrigerant pressure alarms (alerts T133 and T134) handle this situation when the compressor is operating.

Alert Codes T126 and T127 - Circuit High Discharge Pressure

Alert codes T126 and T127 are for circuits A and B respectively. These alerts have "Service Test" text that will be displayed if the alert occurred during service test. These alerts occur when alerts T051 and T055 are active while the appropriate condensing temperature is greater than 150°F. These alerts reset automatically. The cause of the alert is usually an overcharged system, high outdoor ambient temperature coupled with dirty outdoor coil, plugged filter drier, or a faulty high-pressure switch. See Alerts T051 and T055 for diagnostic procedure.

Alert Codes T133 and T134 - Circuit Low Refrigerant Pressure

Alert codes T133 and T134 are for circuits A and B respectively. These alerts have "Service Test" text that will be displayed if the alert occurred during service test. These alerts occur when the compressor is operating and the evaporating temperature (converted from the suction pressure) is less than configured low suction control levels, ***Configuration→COOL→SST→SST.1*** (Low Suction — Level 1) or ***SST.2*** (Low Suction — Level 2) or ***SST.3*** (Low Suction Level 3). The circuit SST value must be less than SST.1 (for 5 minutes), SST.2 (for 4 minutes), or SST.3 (for 3 minutes when using the economizer and 1.5 minutes when not using the economizer) for the alert to occur. When the outdoor temperature is less than 40°F, the above values are reduced 1°F for every 2°F the OAT is below 40°F. An alert will also occur if the circuit SST value is less than SST.3 –5°F for 20 seconds and the outdoor temperature is above 40°F. All the above timers will reset if the suction temperature rises above SST.O for 1 minute. These alerts cause a strike for the respective circuit. If the OAT is less than 10°F, the circuit will shut down without a strike. These alerts will activate when the coil becomes frosted. However, during the 15-minute reset period, the coils will thaw and strike should clear at restart if there is nothing else wrong with the circuit. The alert resets automatically. The cause of the alert is usually low refrigerant charge, dirty filters, evaporator fan operating backwards, loose or broken belt, plugged filter drier, faulty transducer, excessively cold return air, or stuck open economizer when the ambient temperature is low.

Alert Codes T143 and T144 - Circuit Failure to Pressurize

Alert codes T143 and T144 are for circuits A and B respectively. These alerts have "Service Test" text that will be displayed if the alert occurred during service test. These alerts occur when the compressor turns on and the suction pressure does not drop at least 10 PSIG and stay there for the first 20 seconds AND the condensing temperature does not rise at least 5°F and stay there for the first 65 seconds (both conditions have to occur). These alerts cause a strike for the respective circuit. The alert resets automatically. The cause of the alert is usually compressor wiring causing reverse rotation or a faulty compressor.

Alarm Code T153 - Real Time Clock Hardware Failure

The alert occurs when the RTC clock chip on the MBB is not responding. Time and date functions will not operate, such as local occupancy schedules. The unit will default to 24/7 unoccupied mode. Recovery is automatic but MBB board replacement may be necessary. Cycling power to the control and reconfiguring the time and date should be tried before board replacement.

Alarm Code A154 - Serial EEPROM Hardware Failure

The unit will completely shut down. The serial EEPROM chip on the MBB which stores the unit's configuration is not responding. Recovery is automatic, but MBB board replacement may be necessary. Cycling the power to the control should be tried before board replacement.

Alarm Code T155 - Serial EEPROM Storage Failure Error

Configuration data in the serial EEPROM chip can not be verified. The unit will run to last know good values or defaults, and therefore operating errors may occur. Recovery is automatic but MBB board replacement may be necessary. Cycling power to the control and reconfiguring the control points should be tried before board replacement.

Alarm Code A156 - Critical Serial EEPROM Storage Fail Error

The unit will completely shut down. Critical configuration data in the serial EEPROM chip can not be verified. Recovery is automatic but MBB board replacement may be necessary. Cycling power to the control and reconfiguring the critical control points should be tried before board replacement. Check the configurations for the following critical points:

Configuration→COOL→N.CIR (Number of Circuits)

Configuration→HMZR→REHT (Humidi-MiZer™ Equipped)

Alarm Code A157 - A/D Hardware Failure

The unit will completely shut down. The analog to digital conversion chip on the MBB has failed. Recovery is automatic but MBB board replacement may be necessary. Cycling power to the control should be tried before board replacement.

Alarm Codes A163 and A164 - Circuit Down due to Failure

Alarm codes A163 and A164 are for circuits A and B respectively. These alarms have "Service Test" text that will be displayed if the alarm occurred during service test. These alarms occur when a circuit has 3 strikes. Use the Scrolling Marquee display to reset the alarm. Investigate the alarm that caused the strikes to occur.

Alert Code T173 – Loss of Communication with the Energy Management Module

This alert occurs when the MBB cannot communicate with the EMM. These units do not currently support any operation with the EMM. This alert is caused by an internal force to look for the EMM board. When this happens, reload software on the MBB and do not restore configurations, the factory configurations must be used at first. Replace the MBB if alert continues.

Alert Code T175 – Loss of communication with VFD

This alert occurs when the Indoor Fan Type (***Configuration→ I.FAN → FTYP***) is set to 1 and the MBB cannot communicate with the VFD. The control will shutdown the unit and prevent normal operation. This alert will automatically reset when communication is established again. This alert is usually caused by a wiring problem or a incorrect configuration in the VFD or the MBB.

Alert Code T179 – Loss of Communication with the Economizer Control Board

This alert occurs when the MBB cannot communicate with the ECB. Economizer operation will be disabled. This is usually caused by a wiring problem. If a relative humidity sensor is installed and configured but there is not an ECB installed on the unit, this alert will be generated (the ECB is required for RH sensor operation). Investigate using the Low Voltage Schematic, check that the ECB address is correct, and verify the resistance between pins on the LEN connections.

Alert Code T180 - Loss of Communication with the Economizer Actuator

This alert occurs when the ECB cannot communicate with the Belimo Actuator. If the analog signal is connected properly, the economizer can still be controlled through it. This is usually caused by a wiring problem, actuator failure, or the wrong actuator. Investigate using the Low Voltage Schematic. Make sure the actuator is a MFT communication actuator and verify the feedback signal from the actuator is correct.

Alert Code T181 – Loss of communication with Outside Air Unit

This alert occurs when the Outdoor Air Unit Type (***Configuration → OAU → OA.TY***) is not set to 0 and the OAU Operating Mode (***Run Status → OAU → OA.OP***) has not been communicated in the past 3 minutes. The control will reset all OAU data. This alert will automatically reset when communication is established again. This alert is usually caused by a wiring problem or a problem with the OAU communication.

Alarm Code A200 - Linkage Timeout - Comm Failure

This alarm occurs when the MBB fails to communicate with a Linkage device. This only occurs when the MBB has previously communicated with a Linkage device since last power cycle. If a back up sensor was not installed the T074 alert will occur shortly after this one. Reset power to the unit and verify Linkage is communicating.

Alarm Code A404 - Fire Shutdown

This alarm occurs when the shutdown input is either open or closed depending upon its configuration. This alarm is usually caused by an auxiliary device that is trying to shut down the unit, e.g., smoke detector. The configuration for this switch input can be found at variable ***Configuration→UNIT→FS.SW***. Verify that the configuration is set correct, verify the wiring and auxiliary device. This alarm resets automatically.

Alert Code T408 - Dirty Air Filter

This alert occurs when the Filter Status switch senses a plugged filter for 120 continuous seconds after the indoor fan has been running for 10 seconds. Because the Dirty Air Filter switch can be configured normally opened or closed, the switch might be open or closed. The configuration for this switch input can be found at variable ***Configuration→UNIT→FL.SW***. Verify that the configuration is set correct, verify the wiring and filter status switch. The hose should be connected to the low side of the switch. This alert resets automatically.

Alert Code T409

There are 2 different texts for this alert code. Pressing enter and esc on the marquee or navigator to expand the T409 alert will show you one of the below alerts. Make sure the expanded text is read correctly before troubleshooting.

- <u>Fan Status Switch On, Fan Contactor Off</u>

  This alarm occurs when the fan status switch has sensed that the indoor fan has been on for 10 seconds and the indoor fan feedback has determined that the indoor fan should be off. Because the Fan Status switch can be configured normally

opened or closed, the switch might be open or closed. The configuration for this switch input can be found at ***Configuration→UNIT→FN.SW***. Verify that the configuration is set correctly. Verify the wiring and fan status switch. The hose should be connected to the high side of the switch. If the IDF is configured to shut down the unit when this alarm occurs (***Configuration→I.FAN→IDF.F = YES***), then this alarm can only be reset manually and the unit is shut down. If the IDF is not configured to shut the unit down when this alarm occurs (IDF.F = NO), then this alarm resets automatically and no specific control action is taken.

- Fan Status Switch Off, Fan Contactor On
  This alert occurs when the fan status switch has sensed that the indoor fan has been off for 10 seconds and the indoor fan feedback has determined that the indoor fan should be on. Because the Fan Status switch can be configured normally opened or closed, the switch might be open or closed. The configuration for this switch input can be found at ***Configuration→UNIT→FN.SW***. Verify that the configuration is set correctly. Verify the wiring and fan status switch. The hose should be connected to the high side of the switch. If the IDF is configured to shut down the unit down when this alert occurs (***Configuration→I.FAN→IDF.F = YES***), then this alarm can only be reset manually and the unit is shut down. If the IDF is not configured to shut the unit down when this alert occurs (IDF.F = NO), then this alert resets automatically and no specific control action is taken.

Alert Code T410

- R-W1 Jumper Not Installed in Space Temp Mode
  This alert occurs when the control mode is Space Temperature mode via Auto Select or Space Temp Select, yet there is no power to W1. Verify that space temperature mode is the desired mode or add jumper between R and W1 (on TB A). This alert resets automatically.
- R-W1 Jumper Must be Installed to Run Heat in Service Test
  This alert occurs when a request for a heat output has occurred yet the W1 input is not high. A jumper must be installed between R and W1 (on TB A) when trying to test heat in Service Test. The alert will clear when Service Test is exited or if another Service Test mode is selected. Remove jumper when done using Service Test if the unit is operating with a thermostat. The jumper should only be left in place if the unit is operating with a space temperature probe.

Alert Code T411 - Thermostat Y2 Input Activated without Y1 Activated

This alert occurs in Thermostat mode when Y2 is energized and Y1 is not. Verify thermostat and thermostat wiring. When Y2 turns On, the software will behave as if Y1 and Y2 are both On. When Y2 turns Off, the software will behave as if Y1 and Y2 are both Off. This alert resets automatically when Y1 is turned On.

Alert Code T412 – Thermostat W2 Input Activated without W1 Activated

This alert occurs in Thermostat mode when W2 is energized and W1 is not. Verify thermostat and thermostat wiring. When W2 turns On, the software will behave as if W1 and W2 are both On. When W2 turns Off, the software will behave as if W1 and W2 are both Off. This alert resets automatically when W1 is turned On.

Alert Code T413 – Thermostat Y and W Inputs Activated Simultaneously

This alert occurs in Thermostat mode when Y1 or Y2 is energized simultaneously with W1 or W2. Verify thermostat and thermostat wiring. The software will enter either the cooling or heating mode depending upon which input turned on first. This alert resets automatically when Y1 and Y2 are not on simultaneously with W1 and W2.

Alert Code T414

There are 6 different alerts under this one alert code. Pressing enter and esc on the marquee or navigator to expand the T414 alert will show you one of the below alerts. All these alerts are generated by the Belimo actuator and reported to the ECB. These alerts can only occur if the ECB is controlling the actuator digitally through MFT.

- Economizer Damper Actuator Out of Calibration
  This alert occurs when the economizer actuator reports a control angle (***Operating Modes→ECON→C.ANG***) less than the minimum control angle (***Configuration→ECON→M.ANG***). Initiate economizer calibration (***Service Test→INDP→E.CAL***) using the Service Test menu. The economizer calibration procedure will try to find new maximum open and closed positions. If the alert does not clear automatically after the calibration procedure is complete, investigate what is limiting economizer rotation. After that step, run another calibration, but first power off unit (spring return the damper), loosen the actuator clamp, and while pushing the damper closed, tighten the clamp. This alert resets automatically.
- Economizer Damper Actuator Torque Above Load Limit
  This alert occurs when the actuator load is too high. Investigate to determine what is increasing damper load, and verify that the actuator is the correct size for the unit. This alert resets automatically.
- Economizer Damper Actuator Hunting Excessively
  This alert occurs when the commanded damper position is changing too rapidly. The stop jog ratio must be less than 21% to clear this alert. Leave the actuator powered with no signal for a few hours to allow the ratio to decrease (may have to wait longer than a few hours). If the alert continues, determine if the ECB or actuator is bad. This alert resets automatically.
- Economizer Damper Stuck or Jammed
  This alarm occurs when the actuator is no longer moving and the actual position is greater than or less than 3% of the commanded position for 20 seconds. Investigate what is stopping the rotation of the actuator and fix. This alert resets automatically.
- Economizer Damper Actuator Mechanical Failure
  This alert occurs when the actuator senses a catastrophic failure. Investigate actuator and replace if necessary. This alert resets automatically.
- Economizer Damper Actuator Direction Switch Wrong Position
  This alert occurs when the economizer damper direction switch is in the wrong position. The direction switch should be in the clockwise position and the actuator should be mounted so that the CW face of the actuator is accessible. Correct if necessary. This alert clears automatically.

Alert Code T415 - IAQ Input Out of Range

This alert occurs when the IAQ input (on ECB) is less than 3.5 mA and the sensor is configured as installed. IAQ operation will be disabled. Check sensor and wiring. This alert clears automatically.

Alert Code T416 - OAQ Input Out of Range

This alert occurs when the OAQ input (on ECB) is less than 3.5 mA and the sensor is configured as installed. OAQ operation will be disabled. Check sensor and wiring. This alert clears automatically.

Alert Code T418

There are 4 different alerts under this one alert code. Pressing enter and esc on the marquee or navigator to expand the T418 alert will show you one of the below alerts. All these alerts are generated by the OAU device and reported to the MBB. These alerts can only occur if the Outdoor Air Unit Type (***Configuration → OAU → OA.TY***) is not set to 0. Control action is only taken on the OAU side and these alerts will reset automatically when the OAU clears them. Refer to the EnergyX Supplemental Installation Instructions for more information on these alarms.

- OAU Motor Failure
  This alert occurs when the OAU Motor Failure Alarm (***Operating Modes → OAU → ALM.1***) is on. This is usually due to motor status reporting a failure on the OAU.
- OAU Dirty Filter
  This alert occurs when the OAU Dirty Filter Alarm (***Operating Modes → OAU → ALM.2***) is on. This is usually due to filter status reporting a dirty filter on the OAU.
- OAU Low CFM
  This alert occurs when the OAU Low CFM Alarm (***Operating Modes → OAU → ALM.3***) is on. This is usually due to OAU not capable of achieving proper CFM. If unit is equipped with a VFD on the indoor fan, the configuration OAU Fan Boost Enable is set to yes (***Configuration→ OAU → EFBE = Yes***), and this alarm is active for 10 minutes, the fan will be commanded to the next highest configured fan speed. If this alarm is still active after another 10 minutes, the fan will again change to the next highest configured fan speed, and so on every 10 minutes until the maximum speed is commanded. The fan will stay at this override commanded speed until this alarm clears and a different function changes the commanded speed.
- OAU General Alarm
  This alert occurs when the OAU Alarm (***Operating Modes → OAU → ALM.4***) is on. Refer to the specific OAU documentation for details.

Table 7 – *Comfort*Link Alarm Codes

ALARM OR ALERT NUMBER	DESCRIPTION	ACTION TAKEN BY CONTROL	RESET METHOD	PROBABLE CAUSE
T051	Compressor A1 Safety Trip	Add Strike for Circuit A	Automatic	High–pressure switch open. Compressor internal protection open. Wiring error
	Service Test – Compressor A1 Safety Trip			
	Compressor A1 Detected After Turnoff	Turn off all compressors	Automatic	Welded contactor
	Service Test – Compressor A1 Detected After Turnoff			
T055	Compressor B1 Safety Trip	Add Strike for Circuit B	Automatic	High–pressure switch open. Compressor internal protection open. Wiring error
	Service Test – Compressor B1 Safety Trip			
	Compressor B1 Detect After Turnoff	Turn off all compressors	Automatic	Welded contactor
	Service Test – Compressor B1 Detected After Turnoff			
T064	Circuit A Saturated Condensing Temp Thermistor Failure	Limited Diagnostic	Automatic	Faulty, shorted, or open thermistor caused by wiring error or loose connection.
T065	Circuit B Saturated Condensing Temp Thermistor Failure	Limited Diagnostic	Automatic	Faulty, shorted, or open thermistor caused by wiring error or loose connection.
T066	Circuit A Saturated Suction Temperature Thermistor Failure	No Circuit A Cooling	Automatic	Circuit A Suction transducer internally forced inactive
T067	Circuit B Saturated Suction Temperature Thermistor Failure	No Circuit B Cooling	Automatic	Circuit B Suction transducer internally forced inactive
T073	Outdoor Air Temperature Thermistor Failure	No cooling with economizer	Automatic	Faulty, shorted, or open thermistor caused by wiring error or loose connection.
T074	Space Temperature Thermistor Failure	If U.CTL = 3, then no heating or cooling	Automatic	Faulty, shorted, or open thermistor caused by wiring error or loose connection.
T075	Supply Air Temperature Thermistor Failure	No cooling with economizer and No adaptive compressor staging	Automatic	Faulty, shorted, or open thermistor caused by wiring error or loose connection.
T076	Return Air Thermistor Failure	If RAT.S = Yes, then no differential Dry Bulb control	Automatic	Faulty, shorted, or open thermistor caused by wiring error or loose connection.
T077	Space Relative Humidity Sensor Failure	If RH.S = Yes, then no indoor humidity control	Automatic	Faulty, shorted, or open sensor caused by wiring error or loose connection.
T092	Circuit A Suction Pressure Transducer Failure	Lockout Circuit A	Manual	Faulty transducer, faulty 5–V power supply, or loose connection
T093	Circuit B Suction Pressure Transducer Failure	Lockout Circuit B	Manual	Faulty transducer, faulty 5–V power supply, or loose connection
T110	Circuit A Loss of Charge	Lockout Circuit A	Manual	Low refrigerant or faulty suction pressure transducer
	Service Test – Circuit A Loss of Charge			
T111	Circuit B Loss of Charge	Lockout Circuit B	Manual	Low refrigerant or faulty suction pressure transducer
	Service Test – Circuit B Loss of Charge			
T126	Circuit A High Discharge Pressure	Shutdown Circuit A	Automatic	An overcharged system, high outdoor ambient temperature coupled with dirty outdoor coil, plugged filter drier, or a faulty high–pressure switch.
	Service Test – Circuit A High Discharge Pressure			
T127	Circuit B High Discharge Pressure	Shutdown Circuit B	Automatic	An overcharged system, high outdoor ambient temperature coupled with dirty outdoor coil, plugged filter drier, or a faulty high–pressure switch.
	Service Test – Circuit B High Discharge Pressure			
T133	Circuit A Low Refrigerant Pressure	Add Strike for Circuit A	Automatic	Low refrigerant charge, dirty filters, evaporator fan turning backwards, loose or broken fan belt, plugged filter drier, faulty transducer, excessively cold return air, or stuck open economizer when the ambient temperature is low.
	Service Test – Circuit A Low Refrigerant Pressure			
T134	Circuit B Low Refrigerant Pressure	Add Strike for Circuit B	Automatic	Low refrigerant charge, dirty filters, evaporator fan turning backwards, loose or broken fan belt, plugged filter drier, faulty transducer, excessively cold return air, or stuck open economizer when the ambient temperature is low.
	Service Test – Circuit B Low Refrigerant Pressure			
T143	Circuit A Failure To Pressurize	Add Strike for Circuit A	Automatic	Wiring causing reverse rotation or faulty compressor
	Service Test – Circuit A Failure to Pressurize			
T144	Circuit B Failure To Pressurize	Add Strike for Circuit B	Automatic	Wiring causing reverse rotation or faulty compressor
	Service Test – Circuit B Failure to Pressurize			
T153	Real Timeclock Hardware Failure	No time and date schedule operation	Automatic	No time/date configured, software failure, or MBB failure

LEGEND

ECB – Economizer Control Board
IGC – Integrated Gas Controller
MBB – Main Base Board
OAT – Outdoor–Air Thermistor

Table 7 — *Comfort*Link Alarm Codes (cont)

ALARM OR ALERT NUMBER	DESCRIPTION	ACTION TAKEN BY CONTROL	RESET METHOD	PROBABLE CAUSE
A154	Serial EEPROM Hardware Failure	Unit Shutdown	Automatic	Software failure or MBB failure
T155	Serial EEPROM Storage Failure Error	Unit operation errors	Automatic	Software failure or MBB failure
A156	Critical Serial EEPROM Storage Fail Error	Unit Shutdown	Automatic	Software failure or MBB failure
A157	A/D Hardware Failure	Unit Shutdown	Automatic	Software failure or MBB failure
A163	Circuit A Down Due to Failure	Lockout Circuit A	Manual	Circuit has 3 strikes or has been locked out by another alarm
	Service Test – Circuit A Down Due to Failure			
A164	Circuit B Down Due to Failure	Lockout Circuit B	Manual	Circuit has 3 strikes or has been locked out by another alarm
	Service Test – Circuit B Down Due to Failure			
T173	Loss of communication with the Energy Management Module	No action	Automatic	MBB Software failure, reload software or replace board
T175	Loss of communication with VFD	Unit Shutdown	Automatic	Communication connection bad or miswired, misconfigured VFD.
T179	Loss of communication with the Economizer Control Board	No economizer operation	Automatic	Communication wiring problem with ECB or faulty MBB or ECB
T180	Loss of communication with the Economizer Actuator	No economizer operation	Automatic	Communication wiring problem with actuator.
T181	Loss of communication with Outside Air Unit	Reset OAU data	Automatic	Wiring Problem or OAU communication failure
A200	Linkage Timeout Error – Comm Failure	No Linkage Operation fall back to local SPT	Automatic	Received a table write from Linkage before, now not receiving any linkage commands
A404	Fire Shutdown	Unit Shutdown	Automatic	Smoke detected by smoke detector
T408	Dirty Air Filter	Alert Generated	Automatic	Dirty Filter
T409	Fan Status Switch ON, fan commanded off	If IDF.F = Yes, then Unit Shutdown	If IDF.F = YES, then Manual, otherwise automatic	Bad Fan Status Switch. Configuration incorrect.
	Fan Status Switch OFF, fan commanded on	If IDF.F = Yes, then Unit Shutdown	If IDF.F = YES, then Manual, otherwise automatic	Tripped Circuit Breaker. Broken belt. Bad indoor fan motor. Configuration incorrect. Bad fan status switch.
T410	R–W1 Jumper Not Installed in Space Temp Mode	Unable to run heat	Automatic	Missing jumper wire
	R–W1 Jumper Must Be Installed to Run Heat In Service Test	Unable to Test Heat Outputs	Automatic	Missing jumper wire
T411	Thermostat Y2 Input Activated without Y1 Activated	Run unit as if Y2 and Y1 are On	Automatic	Bad Thermostat or Thermostat Wiring
T412	Thermostat W2 Input Activated without W1 Activated	Run unit as if W2 and W1 are On	Automatic	Bad Thermostat or Thermostat Wiring
T413	Thermostat Y and W Inputs Activated Simultaneously	Run unit in mode activated first	Automatic	Bad Thermostat or Thermostat Wiring
T414	Economizer Damper Actuator Out of Calibration	Alert Generated	Automatic	Calibrate economizer (E.CAL). If problem still exist then determine what is limiting economizer rotation.
	Economizer Damper Actuator Torque Above Load Limit	Alert Generated	Automatic	Actuator load too high. Check damper load.
	Economizer Damper Actuator Hunting Excessively	Alert Generated	Automatic	Damper position changing too quickly.
	Economizer Damper Stuck or Jammed	Alert Generated	Automatic	No economizer motion. Check damper blades, gears, and actuator.
	Economizer Damper Actuator Mechanical Failure	Alert Generated	Automatic	Check actuator and replace if necessary.
	Economizer Damper Actuator Direction Switch Wrong	Alert Generated	Automatic	Actuator direction control switch (CCW, CW) wrong.
T415	IAQ Input Out of Range	No IAQ Operations	Automatic	Bad sensor, bad wiring, or sensor configured incorrectly.
T416	OAQ Input Out of Range	No OAQ Operations	Automatic	Bad sensor, bad wiring, or sensor configured incorrectly.
T418	OAU Motor Failure	Alert generated	Automatic	Check OAU motors for failure
	OAU Dirty Filter	Alert generated	Automatic	Check/change OAU filters
	OAU Low CFM	Alert generated	Automatic	Check OAU air flow
	OAU General Alarm	Alert generated	Automatic	Check OAU

LEGEND
ECB – Economizer Control Board
IGC – Integrated Gas Controller
MBB – Main Base Board
OAT – Outdoor–Air Thermistor

Control Module Communication

Red LED

Proper operation of the MBB and ECB control boards can be visually checked by looking at the red status LEDs. When operating correctly, the red status LEDs should blink in unison at a rate of once every 2 seconds. If the red LED on the ECB is not blinking, check the DIP switch positions on the board. If the red LEDs are not blinking in unison, verify that correct power is being supplied to all modules. A blinking red LED at the rate of once per second means that software is not loaded on the board. Also, be sure that the board is supplied with the current software. If necessary, reload current software. A board LED that is lit continuously should be replaced.

Green LED

The MBB and ECB each have one green LED. The Local Equipment Network (LEN) LED should always be blinking whenever power is on. If LEN LED is not blinking, check LEN connections for potential communication errors (MBB J3, J4, and J5). Communication between modules is accomplished by a 3-wire sensor bus. These 3 wires run in parallel from module to module. The J4 connector on the MBB also provides both power and communication directly to the Scrolling Marquee display. The J5 connector on the MBB provides a LEN interface at the field connection terminal (TB).

Yellow LED

The MBB has one yellow LED which is used to indicate CCN communication activity. The Carrier Comfort Network® (CCN) LED will blink during times of network communication.

Communication Failures

If the Scrolling Marquee or Navigator display Communication Failure or the green or yellow LED's do not flash on the boards then the problem could be the communication chip on one of the control boards (MBB or ECB). Disconnect all the LEN and CCN plugs from the board and use an ohm meter to measure the resistance on the communication pins of the boards to determine if the board is bad. If the reading is less than half the value indicated in Table 8, then the board needs to be replaced.

NOTE: The resistive values should be read when the board is powered off and the unit is locked out.

Table 8 – LEN and CCN Communication Resistances

Device	Board Serial Number	(LEN) Resistance between Pins/Connector			(CCN) Resistance between Pins/Connector		
		Pins 1 to 3	Pins 1 to 2	Pins 2 to 3	Pins 5 to 7	Pins 5 to 6	Pins 6 to 7
MBB	Prior to 4702N	15K Ω J3, J4, & J5	7.5K Ω J3, J4, & J5	7.5K Ω J3, J4, & J5	15K Ω J5	7.5K Ω J5	7.5K Ω J5
	Starting 4702N	18.9K Ω J3, J4, & J5	9.9K Ω J3, J4, & J5	9.9K Ω J3, J4, & J5	18.9K Ω J5	9.9K Ω J5	9.9K Ω J5
ECB	Prior to 0803N	5.9K Ω J2	5.2K Ω J2	5K Ω J2	–	–	–
	Starting 0803N	18.9K Ω J2	9.9K Ω J2	9.9K Ω J2	–	–	–

Cooling Troubleshooting

Use the Scrolling Marquee display or a CCN device to view the cooling status display and the cooling diagnostic display (see Appendix A) for information on the cooling operation. Check the current alarms and alarm history for any cooling alarm codes and correct any causes. (See Table 7.) Verify any unique control configurations per installed site requirements or accessories.

If alarms conditions are corrected and cleared, operation of the compressors and fans may be verified by using the Service Test mode. (See Table 4.) See Table 9 for general cooling service analysis.

Table 9 – Cooling Service Analysis

PROBLEM	CAUSE	REMEDY
Compressor and Fan Will Not Start.	Power failure.	Call power company.
	Fuse blown or circuit breaker tripped.	Replace fuse or reset circuit breaker.
	Disconnect off.	Power disconnect.
	Compressor time guard to prevent short cycling.	Check using *Comfort*Link Scrolling Marquee.
	Thermostat or occupancy schedule set point not calling for Cooling.	Check using *Comfort*Link Scrolling Marquee.
	Outdoor temperature too low.	Check Compressor Lockout Temperature using *Comfort*Link Scrolling Marquee.
	Active alarm.	Check active alarms using *Comfort*Link Scrolling Marquee.
Compressor Cycles (other than normally satisfying thermostat).	Insufficient line voltage.	Determine cause and correct.
	Active alarm.	Check active alarms using *Comfort*Link *S*crolling Marquee.
Compressor Operates Continuously.	Unit undersized for load.	Decrease load or increase size of unit.
	Thermostat or occupancy schedule set point too low.	Reset thermostat or schedule set point.
	Dirty air filters.	Replace filters.
	Low refrigerant charge.	Check pressure, locate leak, repair, evacuate, and recharge.
	Condenser coil dirty or restricted.	Clean coil or remove restriction.
Excessive Condenser Pressures.	Loose condenser thermistors.	Tighten thermistors.
	Dirty condenser coil.	Clean coil.
	Refrigerant overcharge.	Recover excess refrigerant.
	Faulty TXV.	1. Check TXV bulb mounting and secure tightly to suction line and insulate. 2. Replace TXV (and filter drier) if stuck open or closed.
	Condenser air restricted or air short cycling.	Determine cause and correct.
	Restriction in liquid tube.	Remove restriction.
Condenser Fans Not Operating.	No Power to contactors.	Fuse blown or plug at motor loose.
Excessive Suction Pressure.	High heat load.	Check for sources and eliminate
	Faulty TXV.	1. Check TXV bulb mounting and secure tightly to suction line and insulate. 2. Replace TXV (and filter drier) if stuck open or closed.
	Refrigerant overcharged.	Recover excess refrigerant.
Suction Pressure Too Low.	Dirty air filters.	Replace air filters.
	Low refrigerant charge.	Check pressure, locate leak, repair, evacuate, and recharge.
	Faulty TXV.	1. Check TXV bulb mounting and secure tightly to suction line and insulate. 2. Replace TXV (and filter drier) if stuck open or closed.
	Insufficient evaporator airflow.	Check belt tension. Check for other restrictions.
	Temperature too low in conditioned area (low return-air temperature).	Reset thermostat or occupancy schedule.
Compressor not running but ComfortLINK Status show it is on.	Condensate overflow switch, High pressure, or Freeze protection thermostat has tripped.	Check Alarms. (T051 or T055), check switches and conditions that can cause their trips.

LEGEND
CB – Circuit Breaker
TXV – Thermostatic Expansion Valve

Humidi-MiZer™ Troubleshooting

NOTE: Although the ComfortLink software (v1.x) and this document reference the Humidi-MiZer™, the factory installed Humidi-MiZer option is not available for EnergyX equipped 48/50HC 17-28 units as of this time.

Economizer Troubleshooting

Use the unit Scrolling Marquee display or a CCN device to view the economizer status display and the economizer diagnostic display (see Appendix A) for information on the economizer operation. Check the current alarms and alarm history for any economizer alarm codes and correct any causes. (See Table 7.) Verify any unique control configurations per installed site requirements or accessories. If alarms conditions are corrected and cleared, operation of the economizer may be verified by using the Service Test mode (see Service Test section and Table 4). The following steps specify how to test the economizer using the Scrolling Marquee display. See Table 10 for general economizer service analysis.

1. Enter the ***Service Test*** main menu on the display.
2. Enter ***TEST*** and turn ON test mode. A password may be needed in order to turn ON the Service Test. The default password is 1111.
3. Return to the main level of ***Service Test***.
4. Enter the ***INDP*** submenu and enter an initial value for ***ECON***. This will drive the economizer damper to the specified position. Continue to adjust the ***ECON*** value to make sure the economizer opens and closes.
5. Because of a mechanical problem with the economizer, the actuator might acquire a new degree of rotation which is less than M.ANG. If this occurs, a "T414 Economizer Damper Actuator Out of Calibration" alert will be generated. This alert can only occur if the economizer is using digital communications (***Configuration →ECON→E.CTL* = 1 or 2**). The economizer calibration procedure (***Service Test→IND.P→E.CAL***) will reconfigure the actuator to the new fully closed and fully open positions. To implement the calibration procedure, change ***E.CAL*** from OFF to ON. ***E.CAL*** will remain ON as long as the calibration procedure is being implemented (as long as 5 minutes). During the calibration procedure the actuator will close fully and then open fully. After the calibration is complete, the degree of rotation should be greater than M.ANG, causing the T414 alert to clear. If the T414 alert does not clear, check the economizer damper for other mechanical problems.
6. Return to ***Service Test→TEST*** and turn OFF test mode. This will cause the unit to return to normal operation.

Table 10 – Economizer Service Analysis

PROBLEM	POSSIBLE CAUSE	REMEDY
Damper Does Not Move.	Indoor Fan is off.	Check for proper thermostat connection.
		Unit is not configured for continuous fan operation and the thermostat is not calling for heating or cooling.
		Unit is in Unoccupied mode and there is no call for heating or cooling.
		Tripped circuit breaker.
		No power to the unit.
		Unit is off via CCN command.
	Actuator is unplugged at motor or at economizer board.	Check wiring connections.
	Unit is not configured for economizer.	Configure unit for economizer per the instructions.
	Outdoor-air temperature is above economizer high temperature lockout.	Adjust the high temperature lockout setting if it is incorrect, otherwise, economizer is operating correctly.
	Outdoor-air temperature is below economizer low temperature lockout.	Adjust the low temperature lockout setting if it is incorrect, otherwise, economizer is operating correctly.
	Communication loss to economizer board.	Check wiring connections.
	Damper is jammed.	Identify the obstruction and safely remove.
Economizer Operation is Limited to Minimum Position.	Minimum position is set incorrectly.	Adjust minimum position setting.
	Outdoor-air temperature is above economizer high temperature lockout.	Adjust the high temperature lockout setting if it is incorrect, otherwise, economizer is operating correctly.
	Outdoor-air temperature is below economizer low temperature lockout.	Adjust the low temperature lockout setting if it is incorrect, otherwise, economizer is operating correctly.
	Enthalpy or differential dry bulb are preventing free cooling.	Check enthalpy and return air compared to outside air temperature.
	Outdoor-air thermistor is faulty.	Replace outdoor-air thermistor.
	Low suction pressure problem with a compressor.	Economizer is operating correctly, identify compressor problem.
Economizer Position is Less Than Minimum Position.	IAQ is controlling minimum damper position.	Adjust the IAQ settings if incorrect, otherwise, the economizer is operating correctly.
	Unit is in Unoccupied mode.	Adjust unit occupied schedule if incorrect, otherwise, economizer is operating correctly.
Economizer Does Not Return to Minimum Position.	Unit is operating under free cooling.	Economizer is operating correctly.
Damper Does Not Close on Power Loss.	Damper is jammed or spring return is backwards.	Identify the obstruction and safely remove.
Outdoor Damper Does Not Fully Close at 0% or Fully Open at 100%.	Economizer actuator is out of calibration or spring return is backwards.	Enter Service Test mode and run the Calibrate Economizer (E.CAL) procedure.
Economizer is Not at Configured Minimum Position	Unit is operating under free cooling or a force is applied to the commanded position.	Economizer is operating correctly.

LEGEND
CCN – Carrier Comfort Network
IAQ – Indoor Air Quality

Heating Troubleshooting

Use the unit Scrolling Marquee display or a CCN device to view the heating status display and the heating diagnostic display (see Appendix A) for information on the heating operation. Check the current alarms and alarm history for any heating alarm codes and correct any causes. (See Table 7.) Verify any unique control configurations per installed site requirements or accessories. If alarms conditions are corrected and cleared, operation of the heat stages and indoor fan may be verified by using the Service Test mode. (See Table 4.)

Gas Heat (48HC Units)

See Table 11 for general gas heating service analysis. See Fig. 8 for service analysis of the IGC board logic. Check the status LED on the IGC board for any flashing alarm codes and correct any causes. (See Table 12.)

Electric Heat (50HC Units)

See Table 13 for electric heating service analysis.

Table 11 – Gas Heating Service Analysis

PROBLEM	CAUSE	REMEDY
Heat Will Not Turn On.	Unit is NOT configured for heat.	Check heating configurations using the *Comfort*Link Scrolling Marquee
Burners Will Not Ignite.	Active alarm.	Check active alarms using *Comfort*Link Scrolling Marquee and the IGC flash codes.
	No power to unit.	Check power supply, fuses, wiring, and circuit breakers.
	No power to IGC (Integrated Gas Control).	Check fuses and plugs.
	Heaters off due to time guard to prevent short cycling.	Check using *Comfort*Link Scrolling Marquee and the IGC flash codes.
	Thermostat or occupancy schedule set point not calling for Cooling.	Check using *Comfort*Link Scrolling Marquee.
	No gas at main burners.	Check gas line for air and purge as necessary. After purging gas line of air, allow gas to dissipate for at least 5 minutes before attempting to re-light unit.
	Water in gas line.	Drain water and install drip.
Inadequate Heating.	Dirty air filters.	Replace air filters.
	Gas input too low.	Check gas pressure at manifold. Refer to gas valve adjustment.
	Thermostat or occupancy schedule set point only calling for W1.	Allow time for W2 to energize or adjust setpoints.
	Unit undersized for load.	Decrease load or increase of size of unit.
	Restricted airflow.	Remove restriction. Check SAT compared to the SAT heating limits.
	Too much outdoor air.	Check economizer position and configuration. Adjust minimum position using *Comfort*Link Scrolling Marquee.
	Limit switch cycles main burners.	Check rotation of blower, thermostat heat anticipator settings, and temperature rise of unit. Adjust as needed.
Poor Flame Characteristics.	Incomplete combustion (lack of combustion air) results in: Aldehyde odors, CO, sooting flame, or floating flame.	Check all screws around flue outlets and burner compartment. Tighten as necessary.
		Cracked heat exchanger, replace.
		Unit is over-fired, reduce input. Adjust gas line or manifold pressure.
		Check vent for restriction. Clean as necessary.
		Check orifice to burner alignment.
Burners Will Not Turn Off.	Unit is in Minimum on-time.	Check using *Comfort*Link Scrolling Marquee and the IGC flash codes.
	Unit running in Service Test mode.	Check using *Comfort*Link Scrolling Marquee.
	Main gas valve stuck.	Turn off gas supply and unit power. Replace gas valve.

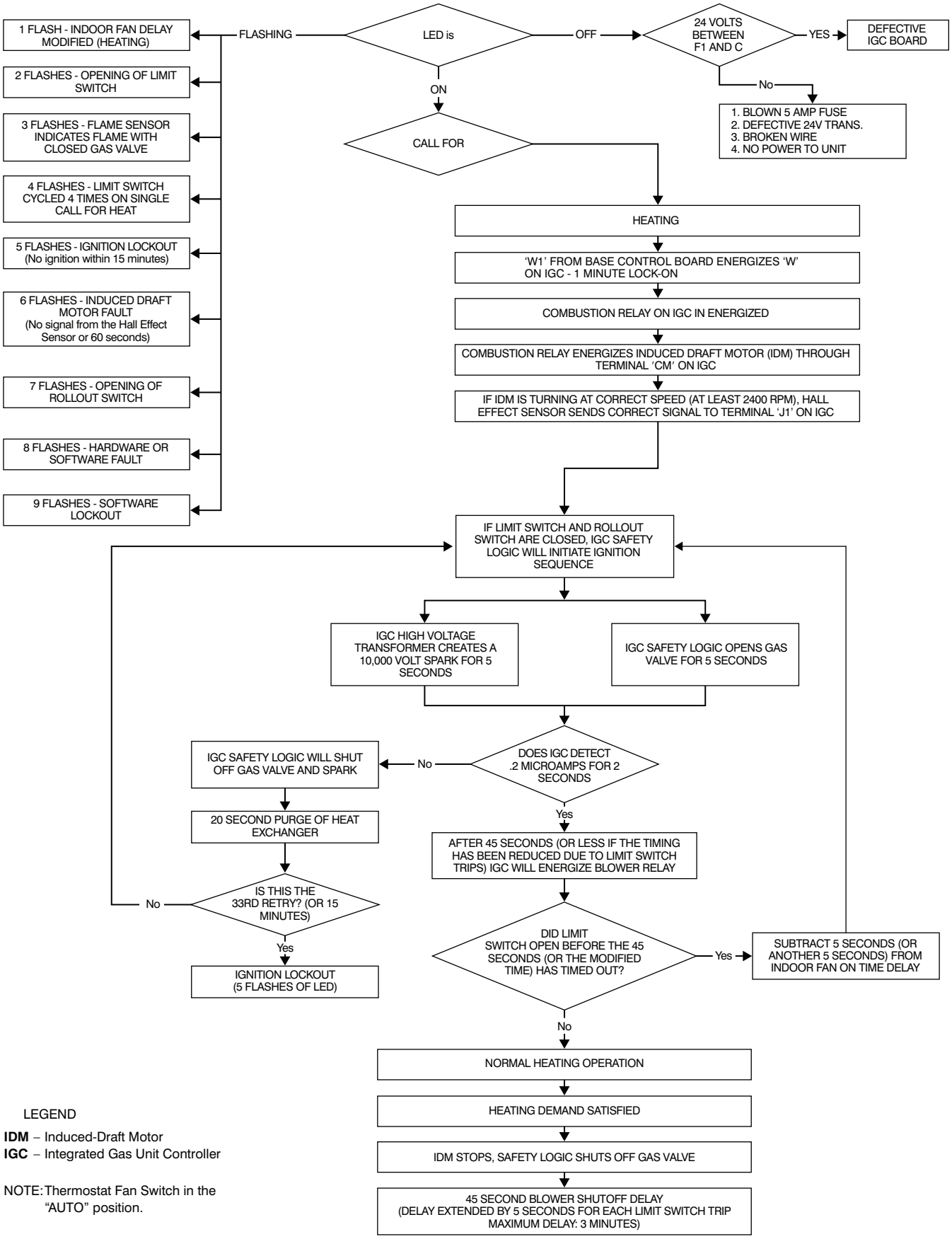

Fig. 8 – IGC Service Analysis Logic

Table 12 – IGC Board LED Alarm Codes

LED FLASH CODE	DESCRIPTION	ACTION TAKEN BY CONTROL	RESET METHOD	PROBABLE CAUSE
On	Normal Operation	—	—	—
Off	Hardware Failure	No gas heating.	—	Loss of power to the IGC. Check 5 amp fuse on IGC, power to unit, 24V circuit breaker, transformer, and wiring to the IGC.
1 Flash	Indoor Fan On/Off Delay Modified	5 seconds subtracted from On delay. 5 seconds added to Off delay (3 min max).	Power reset.	High temperature limit switch opens during heat exchanger warm-up period before fan-on delay expires. High temperature limit switch opens within 10 minutes of heat call (W) Off. See Limit Switch Fault.
2 Flashes	Limit Switch Fault	Gas valve and igniter Off. Indoor fan and inducer On.	Limit switch closed, or heat call (W) Off.	High temperature limit switch is open. Check the operation of the indoor (evaporator) fan motor. Ensure that the supply-air temperature rise is within the range on the unit nameplate. Check wiring and limit switch operation.
3 Flashes	Flame Sense Fault	Indoor fan and inducer On.	Flame sense normal. Power reset for LED reset.	The IGC sensed a flame when the gas valve should be closed. Check wiring, flame sensor, and gas valve operation.
4 Flashes	Four Consecutive Limit Switch Fault	No gas heating.	Heat call (W) Off. Power reset for LED reset.	4 consecutive limit switch faults within a single call for heat. See Limit Switch Fault.
5 Flashes	Ignition Fault	No gas heating.	Heat call (W) Off. Power reset for LED reset.	Unit unsuccessfully attempted ignition for 15 minutes. Check igniter and flame sensor electrode spacing, gaps, etc. Check flame sense and igniter wiring. Check gas valve operation and gas supply.
6 Flashes	Induced Draft Motor Fault	If heat off: no gas heating. If heat on: gas valve Off and inducer On.	Inducer sense normal, or heat call (W) Off.	Inducer sense On when heat call Off, or inducer sense Off when heat call On. Check wiring, voltage, and operation of IGC motor. Check speed sensor wiring to IGC.
7 Flashes	Rollout Switch Lockout	Gas valve and igniter Off. Indoor fan and inducer On.	Power reset.	Rollout switch has opened. Check gas valve operation. Check induced-draft blower wheel is properly secured to motor shaft.
8 Flashes	Internal Control Lockout	No gas heating.	Power reset.	IGC has sensed internal hardware or software error. If fault is not cleared by resetting 24 v power, replace the IGC.
9 Flashes	Temporary Software Lockout	No gas heating.	1 hour auto reset, or power reset.	Electrical interference is disrupting the IGC software.

LEGEND

IGC – Integrated Gas Unit Control

LED – Light–Emitting Diode

NOTES:

1. There is a 3–second pause between alarm code displays.
2. If more than one alarm code exists, all applicable alarm codes will be displayed in numerical sequence.
3. Alarm codes on the IGC will be lost if power to the unit is interrupted.

Table 13 – Electric Heat Service Analysis

PROBLEM	CAUSE	REMEDY
Heat Will Not Turn On.	Active alarm.	Check active alarms using *Comfort*Link Scrolling Marquee.
	Unit is NOT configured for heat.	Check heating configurations using the *Comfort*Link Scrolling Marquee
	No power to unit.	Check power supply, fuses, wiring, and circuit breakers.
	Unit is in minimum heat off-time, or minimum cool-heat changeover time.	Check using *Comfort*Link Scrolling Marquee.
	Thermostat or occupancy schedule setpoint not calling for heating.	Check using *Comfort*Link Scrolling Marquee.
	Heat forced off in Service Test mode.	Check using *Comfort*Link Scrolling Marquee. Turn Service Test mode off.
	No 24 vac at heater contactor.	Check transformer and circuit breaker.
		Check auto-reset limit switches on heater.
		Check manual-reset limit switch (LS) on indoor fan housing.
	Open temperature limit switch on heater.	Check minimum airflow. Check limit switch when it is cool, replace if open.
Inadequate Heating.	Dirty air filters.	Replace air filters.
	Thermostat or occupancy schedule setpoint only calling for W1.	Allow time for W2 to energize or adjust setpoints.
	Heat undersized for load.	Decrease load or increase size of heater.
	Restricted airflow	Remove restriction. Check SAT compared to the SAT heating limits.
	Too much outdoor air.	Check economizer position and configuration. Adjust minimum position.
	Limit switch cycles heaters.	Check rotation of blower and minimum airflow.
	Bad heater elements.	Power off unit and remove high voltage wires. Check resistance of element, replace if open.
Heat Will Not Turn Off.	Unit is in minimum heat on-time.	Check using *Comfort*Link Scrolling Marquee.
	Thermostat or occupancy schedule setpoint still calling for heating.	Check using *Comfort*Link Scrolling Marquee.
	Heat forced on in Service Test mode.	Check using *Comfort*Link Scrolling Marquee. Turn Service Test mode off.
	Heater contactor failed.	Power off unit. Check contactor and replace if closed.

Phase Loss Protection

The phase loss protection option will monitor the three-phase electrical system to provide phase reversal and phase loss protection.

Phase Reversal Protection

If the control senses an incorrect phase relationship, the relay (K1) will be de-energized (opening its contact). If the phase relationship is correct, the relay will be energized. The control has a self-bypass function after a pre-set time. If the control determines that the three phases stay in a correct relationship for 10 consecutive minutes, the relay will stay energized regardless of the phase sequence of three inputs as long as 24-vac control voltage is applied. This self-bypass function will be reset if all three phases are restored in a phase loss event.

Phase Loss Protection

If the reverse rotation board senses any one of the three phase inputs has no AC voltage, the relay will be de-energized (opening its contact). This protection is always active as long as 24-vac control voltage is applied, and is not affected by the self by-pass function of the phase sequence monitoring function. However, in the event of phase loss, the relay will be re-energized only if all three phases are restored and the three phases are in the correct sequence.

A red LED is provided to indicate the function of the board. See the table below.

LED STATUS	FUNCTION
On Continuously	Relay contact closed (normal operation).
Blinking	Relay contact open (phase loss or phase reversal has occurred) — No power will be supplied to the control system.
Off	24 vac control power not present (off).

Thermistor Troubleshooting

The electronic control uses thermistors to sense temperatures used to control operation of the unit. Resistances at various temperatures are listed in Table 14 and 15. Thermistor pin connection points are shown in the Major System Components section. The general locations of the thermistors are shown the Major System Components section.

Air Temperatures

Air temperatures are measured with 10 kilo-ohm thermistors. This includes supply-air temperature (SAT), outdoor-air temperature (OAT), space temperature sensors (T55, T56, T58), and return air temperature (RAT).

The supply air temperature (SAT) and outdoor air temperature (OAT) thermistors use a snap-mount to attach through the unit sheet metal panels. The snap-mount tabs must be flattened on the tip end of the sensor to release for removal from the panel. (See Fig. 9.) To reinstall, make sure the snap-mount tabs extend out.

Refrigerant Temperatures

Condenser coil temperatures are measured with 5 kilo-ohm thermistors. These measurements provide an approximate saturated condensing temperature for each circuit (SCT.A, SCT.B). Fig. 10-11 show the factory locations for the SCT thermistors. Ensure that thermistors are placed at the correct location and are snapped securely over the return bend so that contact is made between the thermistor and the tube.

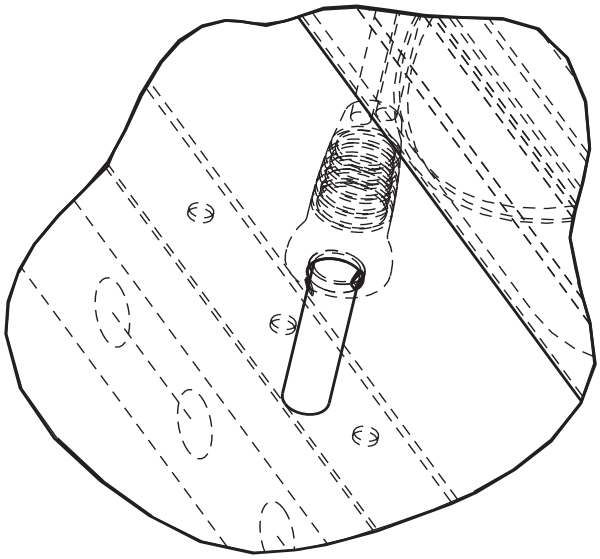

C07015

Fig. 9 - SAT and OAT Thermistor Mounting

Thermistor/Temperature Sensor Check

A high quality digital volt-ohmmeter is required to perform this check.

Connect the digital voltmeter across the appropriate thermistor terminals at the J8 terminal strip on the Main Base Board (see Major System Components section).

Using the voltage reading obtained, read the sensor temperature from Table 14 and 15.

To check thermistor accuracy, measure temperature at probe location with an accurate thermocouple-type temperature-measuring instrument. Insulate thermocouple to avoid ambient temperatures from influencing reading. Temperature measured by thermocouple and temperature determined from thermistor voltage reading should be close, within 5°F if care was taken in applying thermocouple and taking readings.

If a more accurate check is required, unit must be shut down and thermistor removed and checked at a known temperature (freezing point or boiling point of water) using either voltage drop measured across thermistor at the J8 terminal, or by determining the resistance with unit shut down and thermistor disconnected from J8. Compare the values determined with the value read by the control in the Temperatures mode using the Scrolling Marquee display.

Sensor Trim

Corrective offsets can be applied to the space temperature and the supply air temperature sensor readings. These corrections are set in the ***Configuration→TRIM*** menu for the display, or in the ***Maintenance→TRIM*** table for CCN. See the Indoor Air Quality section for available adjustments to IAQ and OAQ sensor readings. The space temperature may be corrected by entering either a calibration temperature value in ***SPT.C***, or an offset temperature value in ***SPT.T***. The supply-air temperature may be corrected by entering either a calibration temperature value in ***SAT.C***, or an offset temperature value in ***SAT.T***. If installed, the return air temperature may be corrected by entering either a calibration temperature value in RAT.C, or an offset temperature value in RAT.T. Temperature corrections should only be made if sensor readings are compared to an accurate reference temperature measurement device.

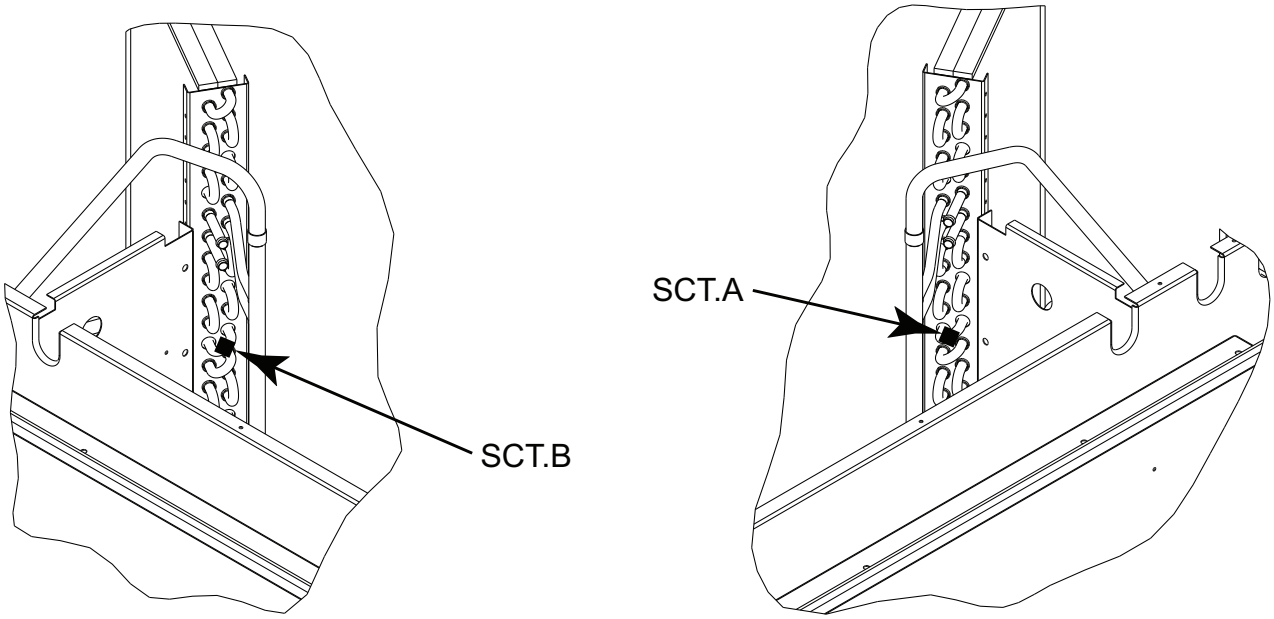

Fig. 10 - Saturated Condensing Temperature Thermistor Location — 48/50HC 17-20

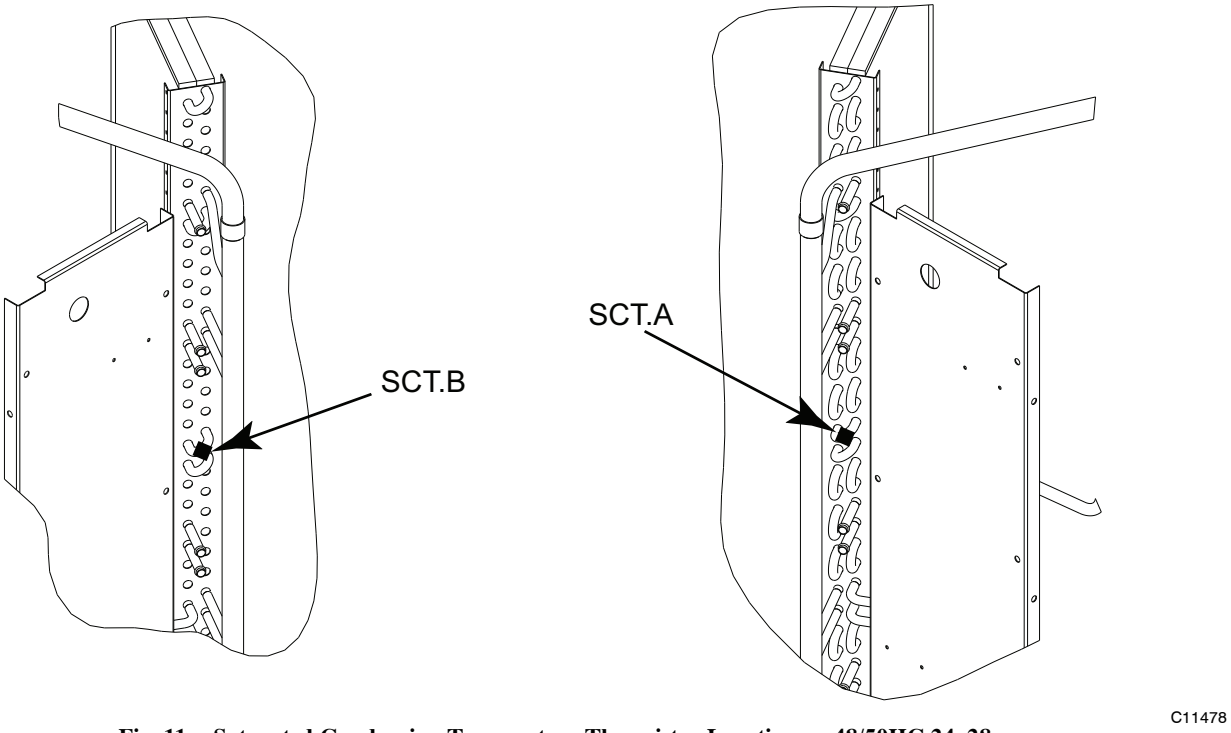

Fig. 11 - Saturated Condensing Temperature Thermistor Location — 48/50HC 24-28

Transducer Troubleshooting

The electronic control uses suction pressure transducers to measure the suction pressure of the refrigerant circuits. The pressure/voltage characteristics of these transducers are in shown in Table 16, the 5vdc power is applied to legs A and B of the transducer and legs B to C represent the signal voltage. To use the voltage drop table for troubleshooting, read the voltage across A and B, then subtract the voltage reading from B to C. This is the voltage drop which can be looked up in Table 16. The accuracy of these transducers can be verified by connecting an accurate pressure gauge to the second refrigerant port in the suction line.

Forcing Inputs and Outputs

Many variables may have their value forced through CCN or directly at the local display. This can be useful during diagnostic testing and also during operation, typically as part of an advanced third party control scheme. Input and output points that may be forced are indicated as 'forcible' in the write status column of the display and CCN tables.

If the user needs to force a variable, follow the same process as when editing a configuration parameter. A forced variable will be displayed on the Scrolling Marquee with a blinking period "." following its value. A forced value on Navigator™ accessory is indicated with a blinking "f". A forced value on CCN devices is indicated with "Control" if forced at the unit display, or "Supervisor" if forced via CCN. To remove a local force with the Scrolling Marquee, select the point with the ENTER key and then press the up-arrow and down-arrow keys simultaneously.

NOTE: In the case of a control power reset, any force in effect at the time of power reset will be cleared.

Table 14 – Temperature (°F) vs Resistance/Voltage Drop Values for OAT, SAT, and SPT Thermistors (10K at 25°C Type II Resistors)

TEMP (F)	VOLTAGE DROP (V)	RESISTANCE (Ohms)	TEMP (F)	VOLTAGE DROP (V)	RESISTANCE (Ohms)	TEMP (F)	VOLTAGE DROP (V)	RESISTANCE (Ohms)
–25	4.758	196,453	**61**	2.994	14,925	**147**	0.890	2,166
–24	4.750	189,692	**62**	2.963	14,549	**148**	0.876	2,124
–23	4.741	183,300	**63**	2.932	14,180	**149**	0.862	2,083
–22	4.733	177,000	**64**	2.901	13,824	**150**	0.848	2,043
–21	4.724	171,079	**65**	2.870	13,478	**151**	0.835	2,003
–20	4.715	165,238	**66**	2.839	13,139	**152**	0.821	1,966
–19	4.705	159,717	**67**	2.808	12,814	**153**	0.808	1,928
–18	4.696	154,344	**68**	2.777	12,493	**154**	0.795	1,891
–17	4.686	149,194	**69**	2.746	12,187	**155**	0.782	1,855
–16	4.676	144,250	**70**	2.715	11,884	**156**	0.770	1,820
–15	4.665	139,443	**71**	2.684	11,593	**157**	0.758	1,786
–14	4.655	134,891	**72**	2.653	11,308	**158**	0.745	1,752
–13	4.644	130,402	**73**	2.622	11,031	**159**	0.733	1,719
–12	4.633	126,183	**74**	2.592	10,764	**160**	0.722	1,687
–11	4.621	122,018	**75**	2.561	10,501	**161**	0.710	1,656
–10	4.609	118,076	**76**	2.530	10,249	**162**	0.699	1,625
–9	4.597	114,236	**77**	2.500	10,000	**163**	0.687	1,594
–8	4.585	110,549	**78**	2.470	9,762	**164**	0.676	1,565
–7	4.572	107,006	**79**	2.439	9,526	**165**	0.666	1,536
–6	4.560	103,558	**80**	2.409	9,300	**166**	0.655	1,508
–5	4.546	100,287	**81**	2.379	9,078	**167**	0.645	1,480
–4	4.533	97,060	**82**	2.349	8,862	**168**	0.634	1,453
–3	4.519	94,020	**83**	2.319	8,653	**169**	0.624	1,426
–2	4.505	91,019	**84**	2.290	8,448	**170**	0.614	1,400
–1	4.490	88,171	**85**	2.260	8,251	**171**	0.604	1,375
0	4.476	85,396	**86**	2.231	8,056	**172**	0.595	1,350
1	4.461	82,729	**87**	2.202	7,869	**173**	0.585	1,326
2	4.445	80,162	**88**	2.173	7,685	**174**	0.576	1,302
3	4.429	77,662	**89**	2.144	7,507	**175**	0.567	1,278
4	4.413	75,286	**90**	2.115	7,333	**176**	0.558	1,255
5	4.397	72,940	**91**	2.087	7,165	**177**	0.549	1,233
6	4.380	70,727	**92**	2.059	6,999	**178**	0.540	1,211
7	4.363	68,542	**93**	2.030	6,838	**179**	0.532	1,190
8	4.346	66,465	**94**	2.003	6,683	**180**	0.523	1,169
9	4.328	64,439	**95**	1.975	6,530	**181**	0.515	1,148
10	4.310	62,491	**96**	1.948	6,383	**182**	0.507	1,128
11	4.292	60,612	**97**	1.921	6,238	**183**	0.499	1,108
12	4.273	58,781	**98**	1.894	6,098	**184**	0.491	1,089
13	4.254	57,039	**99**	1.867	5,961	**185**	0.483	1,070
14	4.235	55,319	**100**	1.841	5,827	**186**	0.476	1,052
15	4.215	53,693	**101**	1.815	5,698	**187**	0.468	1,033
16	4.195	52,086	**102**	1.789	5,571	**188**	0.461	1,016
17	4.174	50,557	**103**	1.763	5,449	**189**	0.454	998
18	4.153	49,065	**104**	1.738	5,327	**190**	0.447	981
19	4.132	47,627	**105**	1.713	5,210	**191**	0.440	964
20	4.111	46,240	**106**	1.688	5,095	**192**	0.433	947
21	4.089	44,888	**107**	1.663	4,984	**193**	0.426	931
22	4.067	43,598	**108**	1.639	4,876	**194**	0.419	915
23	4.044	42,324	**109**	1.615	4,769	**195**	0.413	900
24	4.021	41,118	**110**	1.591	4,666	**196**	0.407	885
25	3.998	39,926	**111**	1.567	4,564	**197**	0.400	870
26	3.975	38,790	**112**	1.544	4,467	**198**	0.394	855
27	3.951	37,681	**113**	1.521	4,370	**199**	0.388	841
28	3.927	36,610	**114**	1.498	4,277	**200**	0.382	827
29	3.903	35,577	**115**	1.475	4.185	**201**	0.376	814
30	3.878	34,569	**116**	1.453	4,096	**202**	0.370	800
31	3.853	33,606	**117**	1.431	4,008	**203**	0.365	787
32	3.828	32,654	**118**	1.409	3,923	**204**	0.359	774
33	3.802	31,752	**119**	1.387	3,840	**205**	0.354	762
34	3.776	30,860	**120**	1.366	3,759	**206**	0.349	749
35	3.750	30,009	**121**	1.345	3,681	**207**	0.343	737
36	3.723	29,177	**122**	1.324	3,603	**208**	0.338	725
37	3.697	28,373	**123**	1.304	3,529	**209**	0.333	714
38	3.670	27,597	**124**	1.284	3,455	**210**	0.328	702
39	3.654	26,838	**125**	1.264	3,383	**211**	0.323	691
40	3.615	26,113	**126**	1.244	3,313	**212**	0.318	680
41	3.587	25,396	**127**	1.225	3,244	**213**	0.314	670
42	3.559	24,715	**128**	1.206	3,178	**214**	0.309	659
43	3.531	24,042	**129**	1.187	3,112	**215**	0.305	649
44	3.503	23,399	**130**	1.168	3,049	**216**	0.300	639
45	3.474	22,770	**131**	1.150	2,986	**217**	0.296	629
46	3.445	22,161	**132**	1.132	2,926	**218**	0.292	620
47	3.416	21,573	**133**	1.114	2,866	**219**	0.288	610
48	3.387	20,998	**134**	1.096	2,809	**220**	0.284	601
49	3.357	20,447	**135**	1.079	2,752	**221**	0.279	592
50	3.328	19,903	**136**	1.062	2,697	**222**	0.275	583
51	3.298	19,386	**137**	1.045	2,643	**223**	0.272	574
52	3.268	18,874	**138**	1.028	2,590	**224**	0.268	566
53	3.238	18,384	**139**	1.012	2,539	**225**	0.264	557
54	3.208	17,904	**140**	0.996	2,488			
55	3.178	17,441	**141**	0.980	2,439			
56	3.147	16,991	**142**	0.965	2,391			
57	3.117	16,552	**143**	0.949	2,343			
58	3.086	16,131	**144**	0.934	2,297			
59	3.056	15,714	**145**	0.919	2,253			
60	3.025	15,317	**146**	0.905	2,209			

Table 15 – Temperature (°F) vs. Resistance/Voltage Drop Values for SCT Sensors (5K at 25°C Resistors)

TEMP (F)	VOLTAGE DROP (V)	RESISTANCE (Ohms)	TEMP (F)	VOLTAGE DROP (V)	RESISTANCE (Ohms)	TEMP (F)	VOLTAGE DROP (V)	RESISTANCE (Ohms)
–25	3.699	98,010	**59**	1.982	7,866	**143**	0.511	1,190
–24	3.689	94,707	**60**	1.956	7,665	**144**	0.502	1,165
–23	3.679	91,522	**61**	1.930	7,468	**145**	0.494	1,141
–22	3.668	88,449	**62**	1.905	7,277	**146**	0.485	1,118
–21	3.658	85,486	**63**	1.879	7,091	**147**	0.477	1,095
–20	3.647	82,627	**64**	1.854	6,911	**148**	0.469	1,072
–19	3.636	79,871	**65**	1.829	6,735	**149**	0.461	1,050
–18	3.624	77,212	**66**	1.804	6,564	**150**	0.453	1,029
–17	3.613	74,648	**67**	1.779	6,399	**151**	0.445	1,007
–16	3.601	72,175	**68**	1.754	6,238	**152**	0.438	986
–15	3.588	69,790	**69**	1.729	6,081	**153**	0.430	965
–14	3.576	67,490	**70**	1.705	5,929	**154**	0.423	945
–13	3.563	65,272	**71**	1.681	5,781	**155**	0.416	925
–12	3.550	63,133	**72**	1.656	5,637	**156**	0.408	906
–11	3.536	61,070	**73**	1.632	5,497	**157**	0.402	887
–10	3.523	59,081	**74**	1.609	5,361	**158**	0.395	868
–9	3.509	57,162	**75**	1.585	5,229	**159**	0.388	850
–8	3.494	55,311	**76**	1.562	5,101	**160**	0.381	832
–7	3.480	53,526	**77**	1.538	4,976	**161**	0.375	815
–6	3.465	51,804	**78**	1.516	4,855	**162**	0.369	798
–5	3.450	50,143	**79**	1.493	4,737	**163**	0.362	782
–4	3.434	48,541	**80**	1.470	4,622	**164**	0.356	765
–3	3.418	46,996	**81**	1.448	4,511	**165**	0.350	750
–2	3.402	45,505	**82**	1.426	4,403	**166**	0.344	734
–1	3.386	44,066	**83**	1.404	4,298	**167**	0.339	719
0	3.369	42,679	**84**	1.382	4,196	**168**	0.333	705
1	3.352	41,339	**85**	1.361	4,096	**169**	0.327	690
2	3.335	40,047	**86**	1.340	4,000	**170**	0.322	677
3	3.317	38,800	**87**	1.319	3,906	**171**	0.317	663
4	3.299	37,596	**88**	1.298	3,814	**172**	0.311	650
5	3.281	36,435	**89**	1.278	3,726	**173**	0.306	638
6	3.262	35,313	**90**	1.257	3,640	**174**	0.301	626
7	3.243	34,231	**91**	1.237	3,556	**175**	0.296	614
8	3.224	33,185	**92**	1.217	3,474	**176**	0.291	602
9	3.205	32,176	**93**	1.198	3,395	**177**	0.286	591
10	3.185	31,202	**94**	1.179	3,318	**178**	0.282	581
11	3.165	30,260	**95**	1.160	3,243	**179**	0.277	570
12	3.145	29,351	**96**	1.141	3,170	**180**	0.272	561
13	3.124	28,473	**97**	1.122	3,099	**181**	0.268	551
14	3.103	27,624	**98**	1.104	3,031	**182**	0.264	542
15	3.082	26,804	**99**	1.086	2,964	**183**	0.259	533
16	3.060	26,011	**100**	1.068	2,898	**184**	0.255	524
17	3.038	25,245	**101**	1.051	2,835	**185**	0.251	516
18	3.016	24,505	**102**	1.033	2,773	**186**	0.247	508
19	2.994	23,789	**103**	1.016	2,713	**187**	0.243	501
20	2.972	23,096	**104**	0.999	2,655	**188**	0.239	494
21	2.949	22,427	**105**	0.983	2,597	**189**	0.235	487
22	2.926	21,779	**106**	0.966	2,542	**190**	0.231	480
23	2.903	21,153	**107**	0.950	2,488	**191**	0.228	473
24	2.879	20,547	**108**	0.934	2,436	**192**	0.224	467
25	2.856	19,960	**109**	0.918	2,385	**193**	0.220	461
26	2.832	19,393	**110**	0.903	2,335	**194**	0.217	456
27	2.808	18,843	**111**	0.888	2,286	**195**	0.213	450
28	2.784	18,311	**112**	0.873	2,239	**196**	0.210	445
29	2.759	17,796	**113**	0.858	2,192	**197**	0.206	439
30	2.735	17,297	**114**	0.843	2,147	**198**	0.203	434
31	2.710	16,814	**115**	0.829	2,103	**199**	0.200	429
32	2.685	16,346	**116**	0.815	2,060	**200**	0.197	424
33	2.660	15,892	**117**	0.801	2,018	**201**	0.194	419
34	2.634	15,453	**118**	0.787	1,977	**202**	0.191	415
35	2.609	15,027	**119**	0.774	1,937	**203**	0.188	410
36	2.583	14,614	**120**	0.761	1,898	**204**	0.185	405
37	2.558	14,214	**121**	0.748	1,860	**205**	0.182	401
38	2.532	13,826	**122**	0.735	1,822	**206**	0.179	396
39	2.506	13,449	**123**	0.723	1,786	**207**	0.176	391
40	2.480	13,084	**124**	0.710	1,750	**208**	0.173	386
41	2.454	12,730	**125**	0.698	1,715	**209**	0.171	382
42	2.428	12,387	**126**	0.686	1,680	**210**	0.168	377
43	2.402	12,053	**127**	0.674	1,647	**211**	0.165	372
44	2.376	11,730	**128**	0.663	1,614	**212**	0.163	367
45	2.349	11,416	**129**	0.651	1,582	**213**	0.160	361
46	2.323	11,112	**130**	0.640	1,550	**214**	0.158	356
47	2.296	10,816	**131**	0.629	1,519	**215**	0.155	350
48	2.270	10,529	**132**	0.618	1,489	**216**	0.153	344
49	2.244	10,250	**133**	0.608	1,459	**217**	0.151	338
50	2.217	9,979	**134**	0.597	1,430	**218**	0.148	332
51	2.191	9,717	**135**	0.587	1,401	**219**	0.146	325
52	2.165	9,461	**136**	0.577	1,373	**220**	0.144	318
53	2.138	9,213	**137**	0.567	1,345	**221**	0.142	311
54	2.112	8,973	**138**	0.557	1,318	**222**	0.140	304
55	2.086	8,739	**139**	0.548	1,291	**223**	0.138	297
56	2.060	8,511	**140**	0.538	1,265	**224**	0.135	289
57	2.034	8,291	**141**	0.529	1,240	**225**	0.133	282
58	2.008	8,076	**142**	0.520	1,214			

Table 16 – Pressure (psig) vs. Voltage Drop Values for Suction Pressure Transducers

PRESSURE (psig)	VOLTAGE DROP (V)		PRESSURE (psig)	VOLTAGE DROP (V)		PRESSURE (psig)	VOLTAGE DROP (V)		PRESSURE (psig)	VOLTAGE DROP (V)
0	0.465		**68**	1.135		**136**	1.804		**204**	2.474
2	0.485		**70**	1.154		**138**	1.824		**206**	2.493
4	0.505		**72**	1.174		**140**	1.844		**208**	2.513
6	0.524		**74**	1.194		**142**	1.863		**210**	2.533
8	0.544		**76**	1.214		**144**	1.883		**212**	2.553
10	0.564		**78**	1.233		**146**	1.903		**214**	2.572
12	0.583		**80**	1.253		**148**	1.922		**216**	2.592
14	0.603		**82**	1.273		**150**	1.942		**218**	2.612
16	0.623		**84**	1.292		**152**	1.962		**220**	2.631
18	0.642		**86**	1.312		**154**	1.982		**222**	2.651
20	0.662		**88**	1.332		**156**	2.001		**224**	2.671
22	0.682		**90**	1.351		**158**	2.021		**226**	2.690
24	0.702		**92**	1.371		**160**	2.041		**228**	2.710
26	0.721		**94**	1.391		**162**	2.060		**230**	2.730
28	0.741		**96**	1.410		**164**	2.080		**232**	2.749
30	0.761		**98**	1.430		**166**	2.100		**234**	2.769
32	0.780		**100**	1.450		**168**	2.119		**236**	2.789
34	0.800		**102**	1.470		**170**	2.139		**238**	2.809
36	0.820		**104**	1.489		**172**	2.159		**240**	2.828
38	0.839		**106**	1.509		**174**	2.178		**242**	2.848
40	0.859		**108**	1.529		**176**	2.198		**244**	2.868
42	0.879		**110**	1.548		**178**	2.218		**246**	2.887
44	0.898		**112**	1.568		**180**	2.237		**248**	2.907
46	0.918		**114**	1.588		**182**	2.257		**250**	2.927
48	0.938		**116**	1.607		**184**	2.277		**252**	2.946
50	0.958		**118**	1.627		**186**	2.297		**254**	2.966
52	0.977		**120**	1.647		**188**	2.316		**256**	2.986
54	0.997		**122**	1.666		**190**	2.336		**258**	3.005
56	1.017		**124**	1.686		**192**	2.356		**260**	3.025
58	1.036		**126**	1.706		**194**	2.375		**262**	3.045
60	1.056		**128**	1.726		**196**	2.395		**264**	3.065
62	1.076		**130**	1.745		**198**	2.415		**266**	3.084
64	1.095		**132**	1.765		**200**	2.434		**268**	3.104
66	1.115		**134**	1.785		**202**	2.454		**270**	3.124

MAJOR SYSTEM COMPONENTS

General

The 48/50HC single package rooftop units contain the *Comfort*Link electronic control system that monitors all operations of the rooftop. The control system is composed of several main control components and available factory-installed options or field-installed accessories as listed in sections below. See Figs. 12 through 15 for the control and power schematics for 48/50HC.

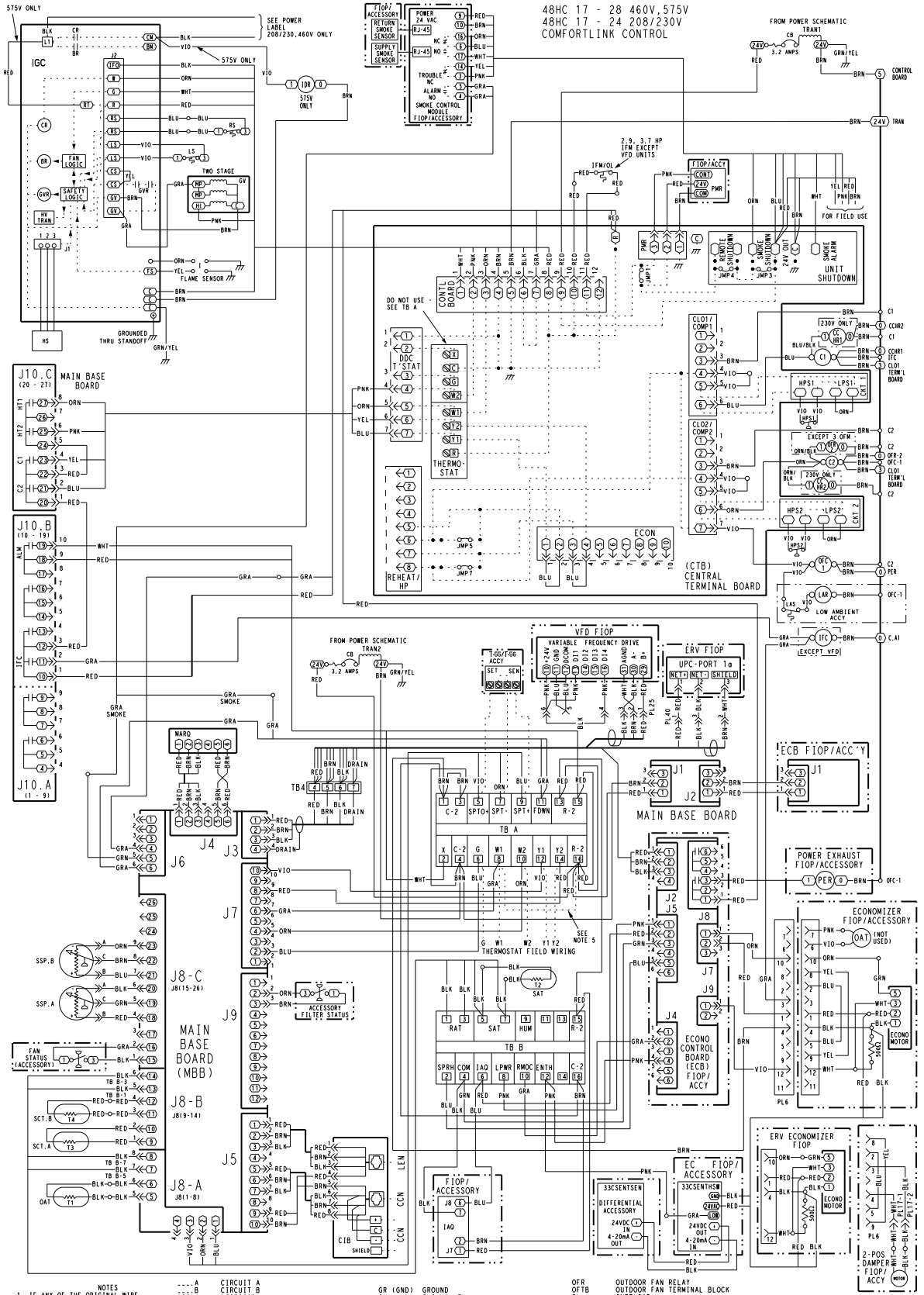

NOTES

1. IF ANY OF THE ORIGINAL WIRE FURNISHED MUST BE REPLACED, IT MUST BE REPLACED WITH TYPE 90 C WIRE OR ITS EQUIVALENT.
2. COMPRESSOR AND FAN MOTORS ARE THERMALLY PROTECTED. THREE PHASE MOTORS ARE PROTECTED AGAINST PRIMARY SINGLE PHASING CONDITIONS.
3. 208/230V UNIT TRAN IS WIRED FOR 230V UNIT. IF UNIT IS TO BE RUN WITH 208V POWER SUPPLY DISCONNECT BLK WIRE FROM 230V TAP AND CONNECT TO 200V TAP.
4. USE COPPER CONDUCTOR ONLY.
5. RED JUMPER WIRE MUST BE ADDED BETWEEN R-2 AND W1 FOR SPACE TEMPERATURE MODE AND TEMPORARILY DURING SERVICE-TEST MODE WHEN THE HEATERS NEED TO OPERATE.

---.A	CIRCUIT A
---.B	CIRCUIT B
ACCY	ACCESSORY
ALM	ALARM RELAY
C	CONTACTOR,COMPRESSOR
CAP	CAPACITOR
CB	CIRCUIT BREAKER
CCH	CRANKCASE HEATER
CCN	CARRIER COMFORT NETWORK
CCR	COMPRESSOR CONTROL RELAY
CIB	COMMUNICATION INTERFACE BOARD
COFS	CONDENSATE OVERFLOW SWITCH
COM	SIGNAL COMMON
COMP	COMPRESSOR MOTOR
CTB	CENTRAL TERMINAL BOARD
DDC	DIRECT DIGITAL CONTROL
EC	ENTHALPY CONTROL
ECB	ECONOMIZER CONTROL BOARD
ENTH	ENTHALPY
ERV	ENERGY RECOVERY VENTILATOR
FB	FUSE BLOCK
FIOP	FACTORY INSTALLED OPTION
FS	FLAME SENSOR
FDWN	FIRE SHUT DOWN
FU	FUSE

GR (GND)	GROUND
GV	GAS VALVE
HP	HORSE POWER (FAN MOTOR)
HPS	HIGH PRESSURE SWITCH
HS	HALL EFFECT SENSOR
HUM	HUMIDISTAT
I	IGNITOR
IAQ	INDOOR AIR QUALITY SENSORS
IDM	INDUCED DRAFT MOTOR
IDR	INDUCED DRAFT RELAY (575V)
IFC	INDOOR FAN CONTACTOR
IFM	INDOOR FAN MOTOR
IGC	INTEGRATED GAS CONTROL
LAR	LOW AMBIENT RELAY
LAS	LOW AMBIENT SWITCH
LEN	LOCAL EQUIPMENT NETWORK
LPWR	CURRENT LOOP POWER
LS	LIMIT SWITCH
LSM	LIMIT SWITCH (MANUAL RESET)
MARQ	SCROLLING MARQUEE DISPLAY
MBB	MAIN BASE BOARD
OAT	OUTDOOR AIR TEMP. SEN
OFC	OUTDOOR FAN CONTACTOR
OFM	OUTDOOR FAN MOTOR

OFR	OUTDOOR FAN RELAY
OFTB	OUTDOOR FAN TERMINAL BLOCK
OL	OVERLOAD
PER	POWER EXHAUST RELAY
PL	PLUG ASSEMBLY
PMR	PHASE MONITOR RELAY
QT	QUADRUPLE TERMINAL
R	RELAY
RAT	RETURN AIR TEMP. SEN
RH	RELATIVE HUMIDITY
RMOC	REMOTE OCCUPANCY
RS	ROLLOUT SWITCH
SAT	SUPPLY AIR TEMP. SENSOR
SEN	SENSOR
SET	SET POINT OFFSET
SCT	SATURATED CONDENSING TEMP
SPRH	SPACE RELATIVE HUMIDITY
SPT	SPACE TEMPERATURE SENSOR
SPTO	SPACE TEMPERATURE OFFSET
SSP	SATURATED SUCTION PRESSURE
SW	SWITCH
TB	TERMINAL BLOCK
TRAN	TRANSFORMER
UPC	UNIVERSAL PROTOCOL CONVERTER
VFD	VARIABLE FREQUENCY DRIVE

THERMOSTAT/IGC MARKINGS

BM	BLOWER
C	COMMON
C-2	COMMON (TRAN2)
CM	COMBUSTION MOTOR
CS	CENTRIFUGAL SWITCH
G	FAN
IFO	INDOOR FAN ON
L1	LINE 1
R	THERMOSTAT POWER
R-2	THERMOSTAT POWER (TRAN2)
RT	POWER SUPPLY
SS	SPEED SENSOR
W	THERMOSTAT HEAT CALL
W1	1st STAGE OF HEATING
W2	2nd STAGE OF HEATING
X	ALARM OUTPUT
Y1	1st STAGE OF COOLING
Y2	2nd STAGE OF COOLING

Fig. 12 - Typical 48HC 17-28 ComfortLINK Control Diagram

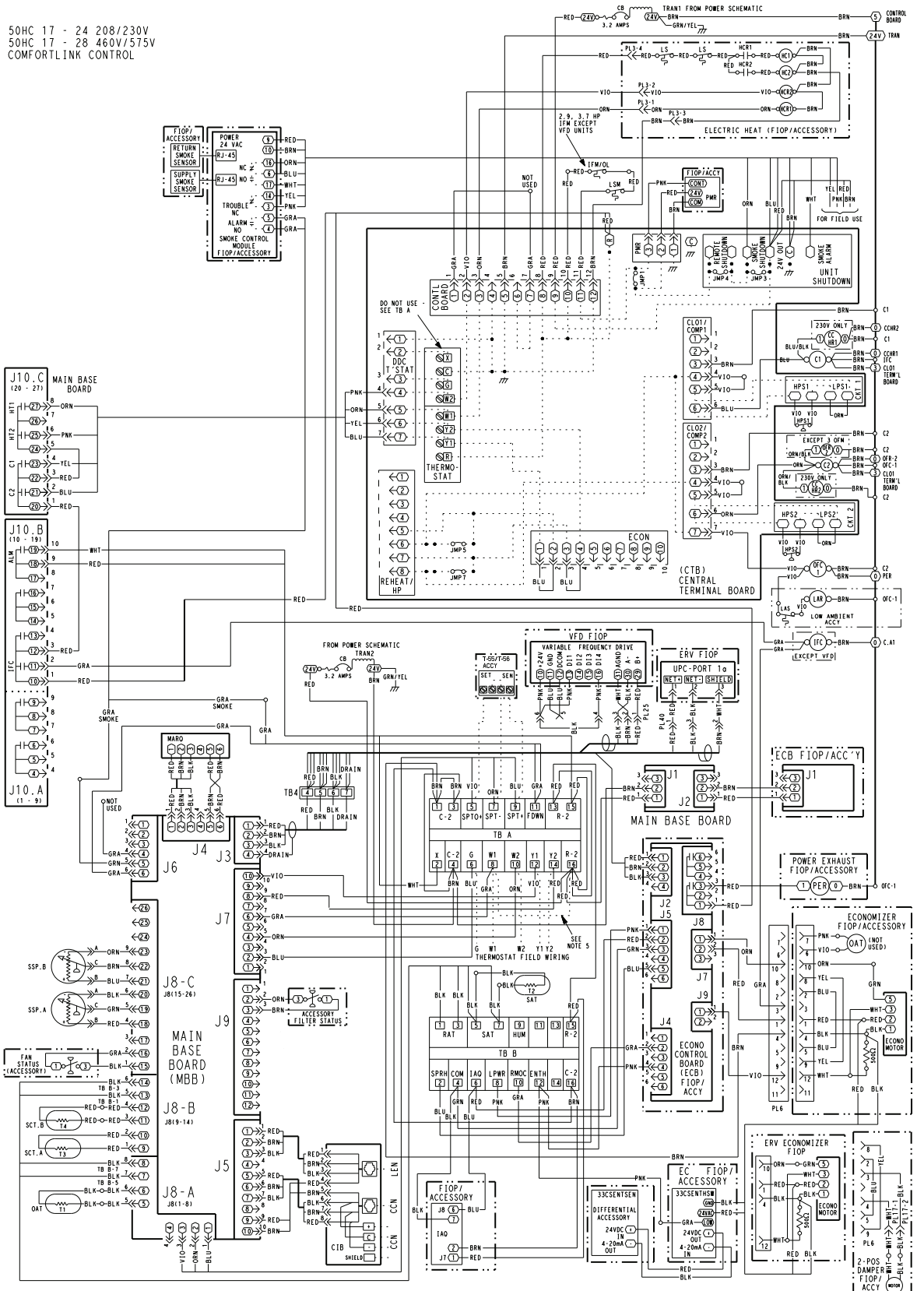

NOTES

1. IF ANY OF THE ORIGINAL WIRE FURNISHED MUST BE REPLACED, IT MUST BE REPLACED WITH TYPE 90 C WIRE OR ITS EQUIVALENT.
2. COMPRESSOR AND FAN MOTORS ARE THERMALLY PROTECTED. THREE PHASE MOTORS ARE PROTECTED AGAINST PRIMARY SINGLE PHASING CONDITIONS.
3. 208/230V UNIT TRAN IS WIRED FOR 230V UNIT. IF UNIT IS TO BE RUN WITH 208V POWER SUPPLY DISCONNECT BLK WIRE FROM 230V TAP AND CONNECT TO 200V TAP.
4. USE COPPER CONDUCTOR ONLY.
5. RED JUMPER WIRE MUST BE ADDED BETWEEN R-2 AND W1 FOR SPACE TEMPERATURE MODE AND TEMPORARILY DURING SERVICE-TEST MODE WHEN THE HEATERS NEED TO OPERATE.

----A	CIRCUIT A
----B	CIRCUIT B
ACCY	ACCESSORY
ALM	ALARM RELAY
C	CONTACTOR,COMPRESSOR
CAP	CAPACITOR
CB	CIRCUIT BREAKER
CCH	CRANKCASE HEATER
CCN	CARRIER COMFORT NETWORK
CCR	COMPRESSOR CONTROL RELAY
CIB	COMMUNICATION INTERFACE BOARD
COFS	CONDENSATE OVERFLOW SWITCH
COM	SIGNAL COMMON
COMP	COMPRESSOR MOTOR
CTB	CENTRAL TERMINAL BOARD
DDC	DIRECT DIGITAL CONTROL
EC	ENTHALPY CONTROL
ECB	ECONOMIZER CONTROL BOARD
ENTH	ENTHALPY
ERV	ENERGY RECOVERY VENTILATOR
FB	FUSE BLOCK
FIOP	FACTORY INSTALLED OPTION
FDWN	FIRE SHUT DOWN
FU	FUSE
GR (GND)	GROUND
HP	HORSE POWER (FAN MOTOR)
HPS	HIGH PRESSURE SWITCH
HUM	HUMIDISTAT
IAQ	INDOOR AIR QUALITY SENSORS
IFC	INDOOR FAN CONTACTOR
IFM	INDOOR FAN MOTOR
LAR	LOW AMBIENT RELAY
LAS	LOW AMBIENT SWITCH
LEN	LOCAL EQUIPMENT NETWORK
LPWR	CURRENT LOOP POWER
LS	LIMIT SWITCH
LSM	LIMIT SWITCH (MANUAL RESET)
MARQ	SCROLLING MARQUEE DISPLAY
MBB	MAIN BASE BOARD
OAT	OUTDOOR AIR TEMP. SEN
OFC	OUTDOOR FAN CONTACTOR
OFM	OUTDOOR FAN MOTOR
OFR	OUTDOOR FAN RELAY
OFTB	OUTDOOR FAN TERMINAL BLOCK
OL	OVERLOAD
PER	POWER EXHAUST RELAY
PL	PLUG ASSEMBLY
PMR	PHASE MONITOR RELAY
QT	QUADRUPLE TERMINAL
R	RELAY
RAT	RETURN AIR TEMP. SEN
RH	RELATIVE HUMIDITY
RMOC	REMOTE OCCUPANCY
SAT	SUPPLY AIR TEMP. SENSOR
SEN	SENSOR
SET	SET POINT OFFSET
SCT	SATURATED CONDENSING TEMP
SPRH	SPACE RELATIVE HUMIDITY
SPT	SPACE TEMPERATURE SENSOR
SPTO	SPACE TEMPERATURE OFFSET
SSP	SATURATED SUCTION PRESSURE
SW	SWITCH
TB	TERMINAL BLOCK
TRAN	TRANSFORMER
UPC	UNIVERSAL PROTOCOL CONVERTER
VFD	VARIABLE FREQUENCY DRIVE

THERMOSTAT/IGC MARKINGS

BM	BLOWER
C	COMMON
C-2	COMMON (TRAN2)
CS	CENTRIFUGAL SWITCH
G	FAN
L1	LINE 1
R	THERMOSTAT POWER
R-2	THERMOSTAT POWER (TRAN2)
RT	POWER SUPPLY
SS	SPEED SENSOR
W	THERMOSTAT HEAT CALL
W1	1st STAGE OF HEATING
W2	2nd STAGE OF HEATING
X	ALARM OUTPUT
Y1	1st STAGE OF COOLING
Y2	2nd STAGE OF COOLING

C11523

Fig. 13 - Typical 50HC 17-28 ComfortLINK Control Diagram

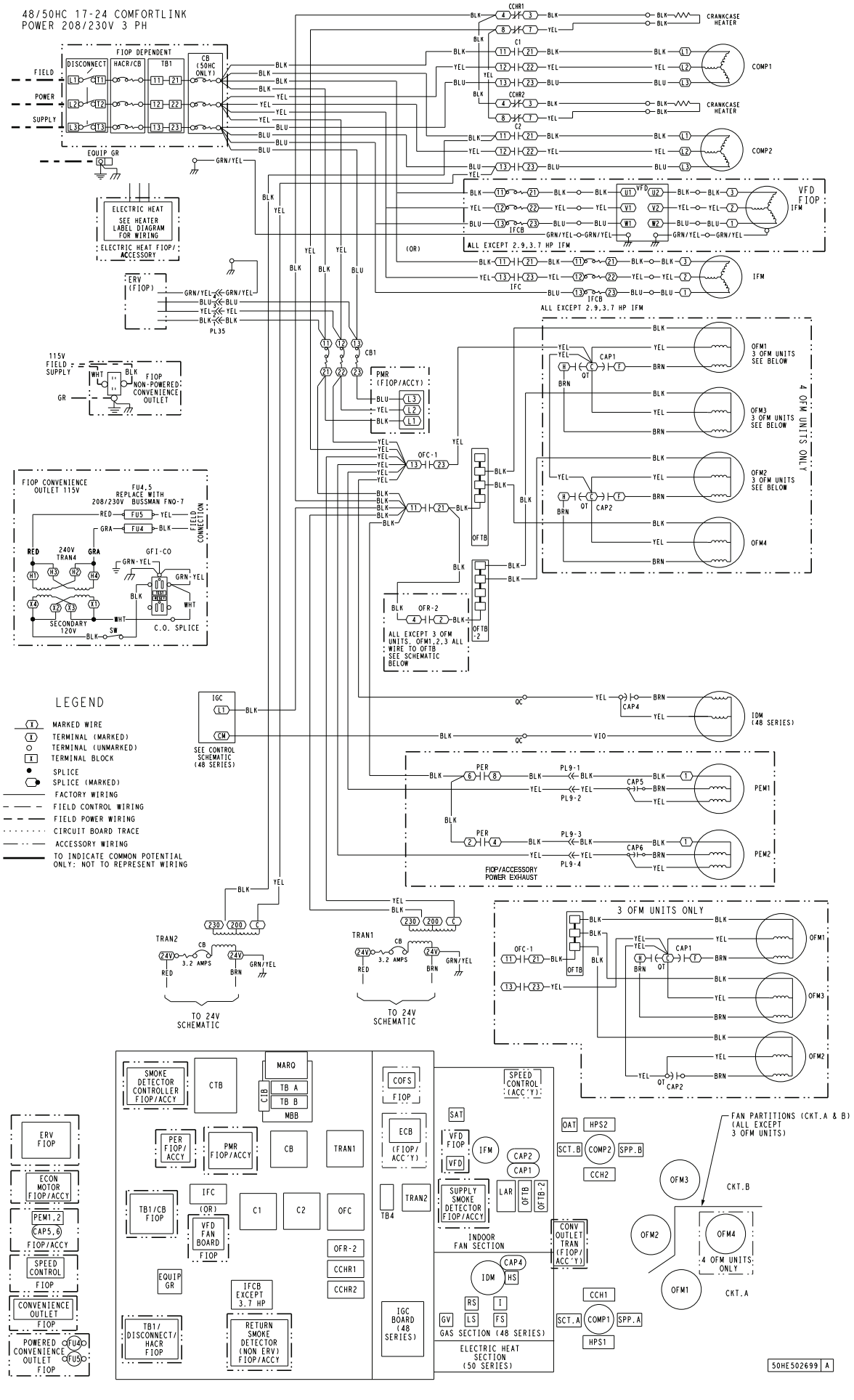

Fig. 14 - Typical 48/50HC 17-24 208/230V 3 Ph. Power and Component Arrangement

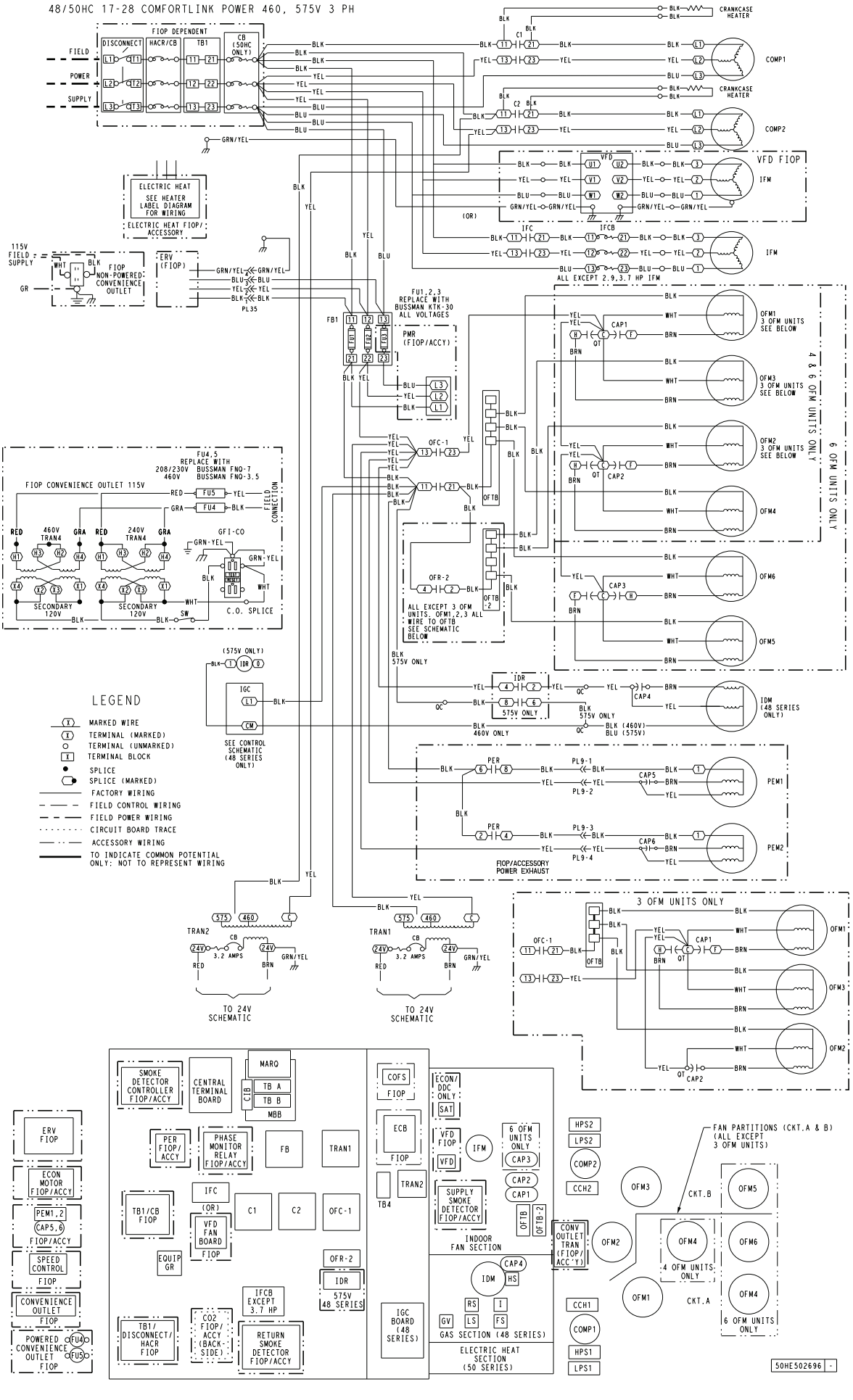

Fig. 15 - Typical 48/50HC 17-28 460V and 5750V 3 Ph. Power and Component Arrangement

Main Base Board (MBB)

See Fig. 16 and Table 17. The MBB is the center of the *Comfort*Link control system. It contains the major portion of the operating software and controls the operation of the unit. The MBB continuously monitors input/output channel information received from its inputs and from the Economizer Control Board (ECB). The MBB receives inputs from thermistors and transducers. The MBB also receives the Current Sensor inputs for compressors and other discrete or digital inputs. The MBB reads space temperature (SPT) from either a T-55, T-56 or T-58 device and space temperature offset (SPTO) from a T-56 device. See Field-Installed Accessories section. The MBB controls 11 relays.

NOTE: The Main Base Board (MBB) has a 3-position instance jumper that is factory set to '1.' **Do not change this setting.**

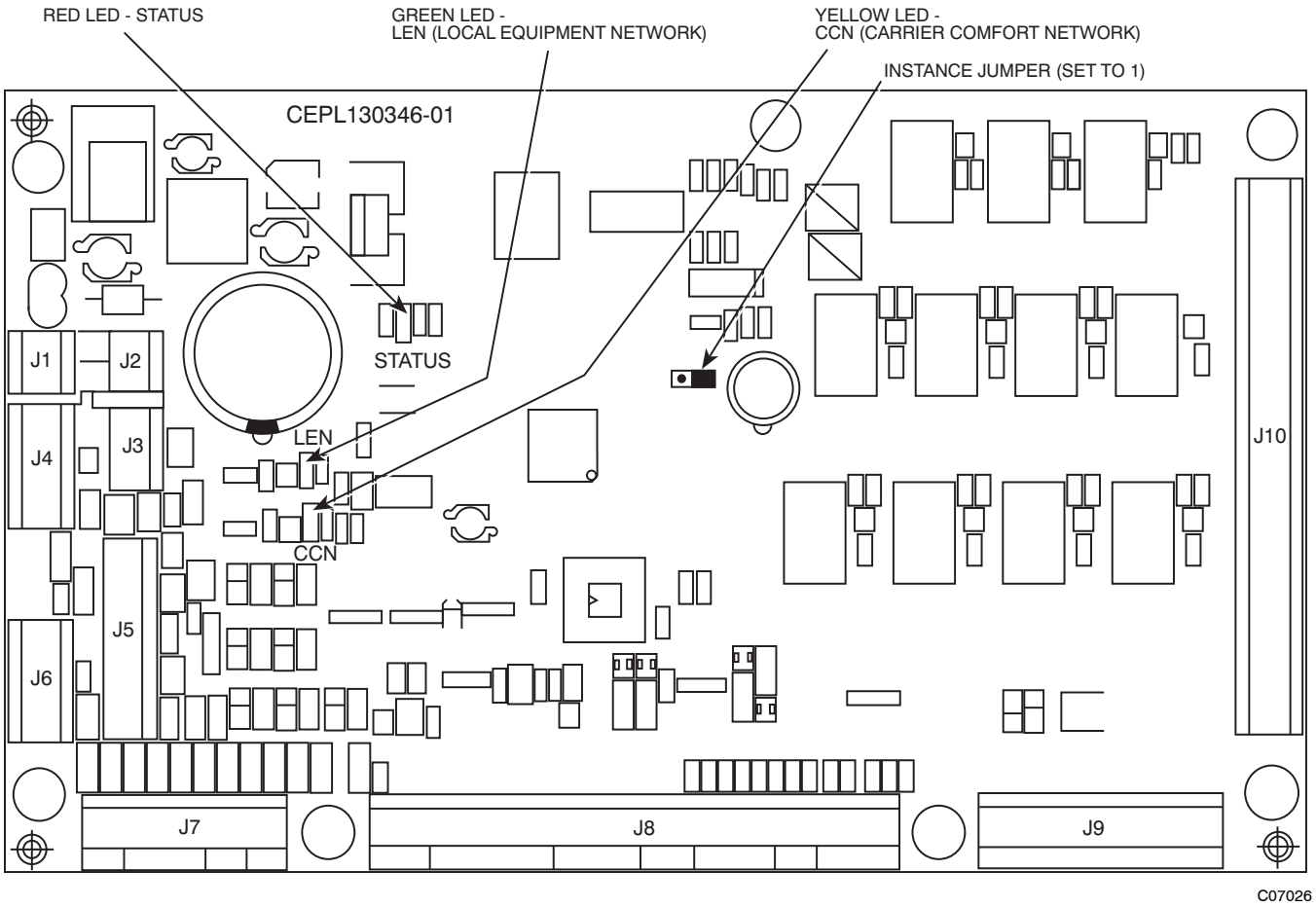

Fig. 16 - Main Base Board (MBB)

Table 17 – Main Base Board (MBB) Connections

DISPLAY NAME	POINT DESCRIPTION	SENSOR LOCATION	TYPE OF I/O	CONNECTION PIN NUMBER
		INPUTS		
	Input power from TRAN2	control box	24 VAC	J1, 1–3
IGC.F	IGC Fan Request	gas section	switch input	J6, 4
FDWN	Fire shutdown switch	supply/return/space	switch input	J6, 6
G	Thermostat G (Fan)	space	switch input	J7, 2
W2	Thermostat W2 (2nd Stage Heat)	space	switch input	J7, 4
W1	Thermostat W1 (1st Stage Heat)	space	switch input	J7, 6
Y2	Thermostat Y2 (2nd Stage Cool)	space	switch input	J7, 8
Y1	Thermostat Y1 (1st Stage Cool)	space	switch input	J7, 10
FIL.S	Filter status switch	indoor fan section	switch input	J9, 2–3
HUM	Humidistat switch input	space	switch input	J9, 5–6
	Not Used		0–5vdc digital input	J9, 7–9
	Not Used		0–5vdc digital input	J9, 10–12
SPT	Space temperature (T55/56)	space	10k thermistor	J8, 1–2
SPTO	Space temperature offset (T56)	space	10k thermistor	J8, 2–3
OAT	Outdoor air temperature	outdoor coil support	10k thermistor	J8, 5–6
SAT	Supply air temperature	indoor fan housing, or supply duct	10k thermistor	J8, 7–8
SCT.A	Saturated condenser temperature, circuit A	outdoor coil, circuit A	5k thermistor	J8, 9–10
SCT.B	Saturated condenser temperature, circuit B	outdoor coil, circuit B	5k thermistor	J8, 11–12
RAT	Return Air Temperature	Return	10k thermistor	J8, 13–14
FAN.S	Fan status switch	indoor fan section	switch input	J8, 15–16
SSP.A	Suction pressure, circuit A	compressor A suction pipe	0–5 VDC pressure transducer	J8, 18–20
SSP.B	Suction pressure, circuit B	compressor B suction pipe	0–5 VDC pressure transducer	J8, 21–23
	Not Used		0–5 VDC	J8, 24–26
		OUTPUTS		
CRC	Cooling Reheat Control		relay	J10, 3
RH2.A	Reheat 2 Valve Circuit A		relay	J10, 6
RH2.B	Reheat 2 Valve circuit B		relay	J10, 9
IDF.1	Indoor fan relay 1		relay	J10, 11
IDF.2	Indoor Fan relay 2		relay	J10, 13
IDF.3	Indoor Fan relay 3		relay	J10, 16
ALRM	Alarm relay		relay	J10, 19
COMP.B	Compressor B1 relay		relay	J10, 21
COMP.A	Compressor A1 relay		relay	J10, 23
HT.1	Heat Stage 2 relay		relay	J10, 25
HT.2	Heat Stage 1 relay		relay	J10, 27
		COMMUNICATION		
	Local Equipment Network (LEN)		communication	J5, 1–3
	Carrier Comfort Network (CCN)		communication	J5, 5–7
	Network device power		24 VAC	J5, 9–10
	Scrolling Marquee Display (LEN)		communication	J4, 1–3
	Scrolling Marquee Display power		24 VAC	J4, 5–6
	Expansion LEN Bus		communication	J3, 1–3
	Optional ECB power		24 VAC	J2, 1–2

Economizer Control Board (ECB)

The ECB controls the economizer actuator. (See Fig. 17 and Table 18.) The control signal from the ECB uses either the MFT (Multi-Function Technology) digital communication protocol or a 4 to 20 mA output signal as defined by the configuration ***Configuration→ECON→E.CTL***. The ECB has inputs for Indoor Air Quality (IAQ), Outdoor Air Quality (OAQ), enthalpy and RH sensor. It also controls two power exhaust outputs.

By digitally communicating with the ECB, the economizer actuator is able to provide the damper position and diagnostic information to the *Comfort*Link controller. The damper position is displayed at ***Outputs→ECON→EC.AP***. Diagnostic information is displayed via Alert T414. More information about these alarms is contained in the Alarms and Alerts section.

NOTE: The Economizer Control Board (ECB) has a 4-position DIP switch that is factory set to '0' (ON, towards the center of the board). **Do not change this setting.**

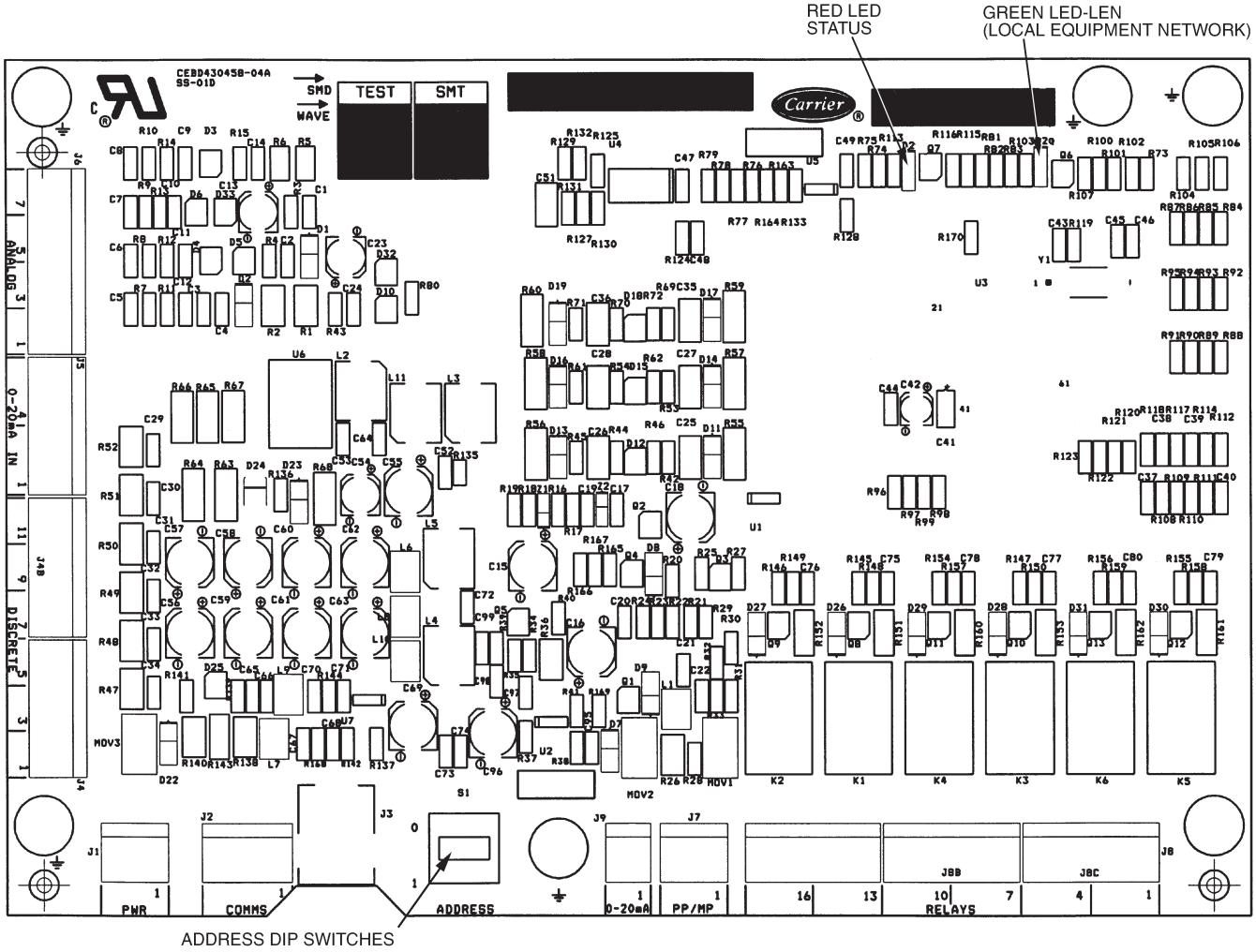

Fig. 17 - Economizer Control Board (ECB)

Table 18 – Economizer Control Board (ECB) Connections

DISPLAY NAME	POINT DESCRIPTION	SENSOR LOCATION	TYPE OF I/O	CONNECTION PIN NUMBER
INPUTS				
	Input power from MBB	control box	24 VAC	J1, 1 – 2
RM.OC	Remote occupancy switch	field installed	switch input	J4, 2
ENTH or IAQ.S	Outdoor enthalpy switch, or Indoor air quality switch	economizer, or return/space	switch input	J4, 4
IAQ	Indoor air quality sensor	return/space	0 – 20 mA	J5, 2
OAQ or SP.RH	Outdoor air quality sensor, or Relative humidity sensor	field installed	0 – 20 mA	J5, 5
	Sensor Common		Ground	J5, 3
	Actuator Common		Ground	J7, 3
OUTPUTS				
	Output power to enthalpy switch		24 VAC	J4, 3
	Output power for loop power sensors		24 VDC	J5, 1
	Output power to economizer actuator		24 VAC	J7, 2
PE.1	Power exhaust 1 relay		relay	J8, 3
PE.2	Power exhaust 2 relay		relay	J8, 6
EC.CP	Commanded Economizer position		0 – 20 mA	J9, 1
COMMUNICATION				
	Local Equipment Network (LEN)		communication	J2, 1 – 3
	Carrier Comfort Network (CCN)		communication	J3
EC.CP & EC.AP	Economizer actuator position (digital control)		MFT communication	J7, 1

Integrated Gas Control (IGC) Board

The IGC is provided on gas heat units. (See Fig. 18 and Table 19.) The IGC controls the direct spark ignition system and monitors the rollout switch, limit switch, and induced-draft motor Hall Effect switch.

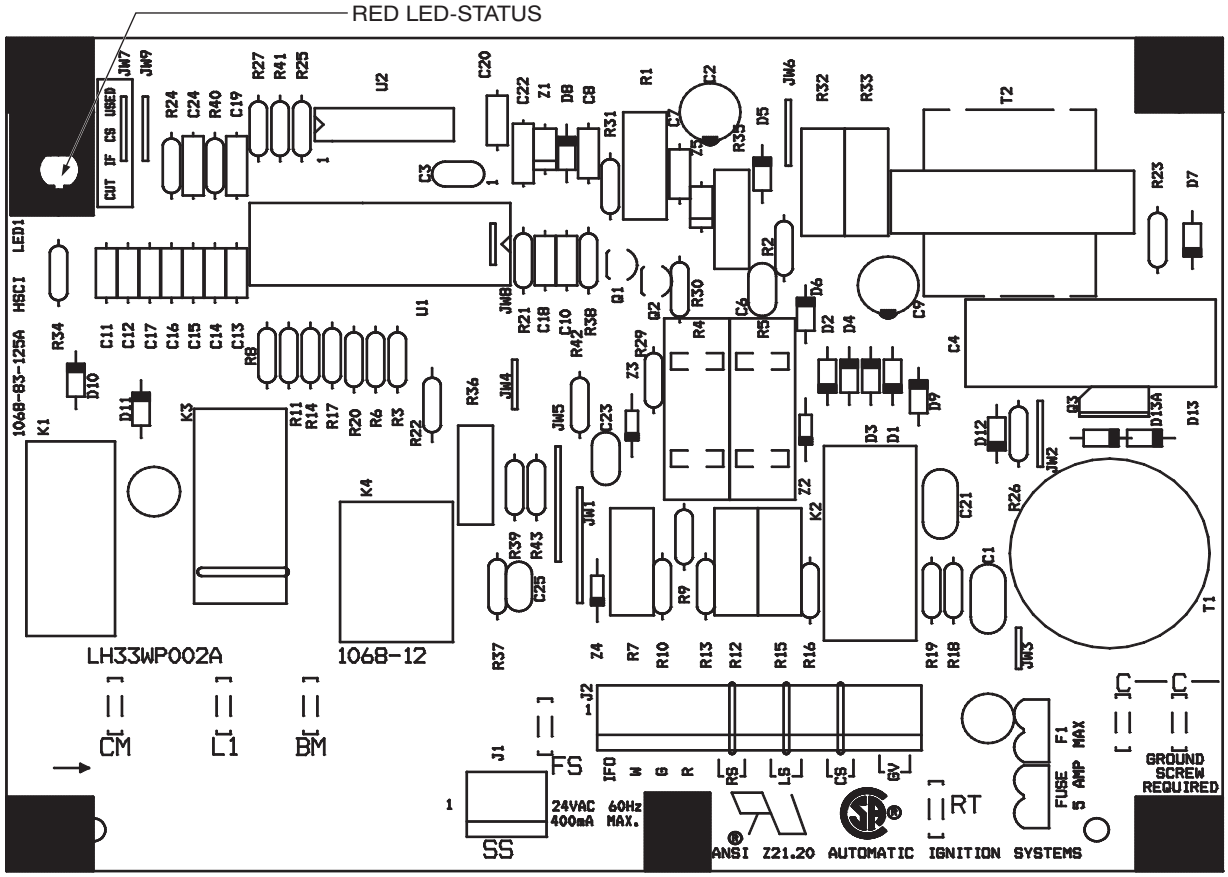

Fig. 18 - Integrated Gas Control (IGC) Board

Table 19 – Integrated Gas Control (IGC) Board Connections

TERMINAL LABEL	POINT DESCRIPTION	SENSOR LOCATION	TYPE OF I/O	CONNECTION PIN NUMBER
INPUTS				
RT, C	Power for IDR on 575v units	control box	24 VAC	Spade
C	Input power common			Spade
SS	Speed sensor	gas section	analog input	J1, 1–3
FS, T1	Flame sensor	gas section	switch input	Spade
W	Heat stage 1 Call	MBB to CTB to IGC	24 VAC	J2, 2
G	Indoor Fan Call	CTB to IGC	24 VAC	J2, 3
R	Input power from TRAN 1	CTB to IGC	24 VAC	J2, 4
RS	Rollout switch	gas section	switch input	J2, 5–6
LS	Limit switch	gas section	switch input	J2, 7–8
CS	Centrifugal switch (not used)		switch input	J2, 9–10
OUTPUTS				
L1, CM	Induced draft combustion motor or relay	gas section	line VAC	
IFO	Indoor fan request	control box	relay	J2, 1
GV (W1)	Gas valve (heat stage 1)	gas section	relay	J2, 12
GV (W2)	Gas Valve (heat stage 2, from CTB)	gas section	Not on IGC	

Table 20 – Upper and Lower Field Connection Terminal (TB A and TB B) Board Connections

TERMINAL BLOCK	TERMINAL LABEL	DISPLAY NAME*	DESCRIPTION	SENSOR LOCATION	TYPE OF I/O	TERMINAL NUMBER
Upper (TB A)	C–2		Transformer 2 Common		24 VAC common	1,3,4
	R–2		24 VAC power Transformer 2		24 VAC	13,15,16
	SPT+	SPT	Space temperature (T55/56)	space	10k thermistor	8
	SPT–	SPT	Space temperature (T55/56)	space	10k thermistor	7
	SPTO	SPTO	Space temperature offset (T56)	space	10k thermistor	5
	FDWN	FDWN	Fire shutdown switch input	supply/return/space	24 VAC input	11
	X	ALRM	Alarm output (normally open)	space	24 VAC output	2
	G	G	Thermostat G (Fan)	space	24 VAC input	6
	W1	W1	Thermostat W1 (1st stage heat)	space	24 VAC input	8
	W2	W2	Thermostat W2 (2nd stage heat)	space	24 VAC input	10
	Y1	Y1	Thermostat Y1 (1st stage cool)	space	24 VAC input	12
	Y2	Y2	Thermostat Y2 (2nd stage cool)	space	24 VAC input	14
Lower (TB B)	RAT	RAT	Return Air Temperature Sensor	return duct	10k thermistor	1,3
	SAT	SAT	Supply Air Temperature Sensor	Blower or duct	10k thermistor	5,7
	HUM	HUM	Humidistat switch input	supply/return/space	switch input	9
	LPWR		Analog Sensor Loop power (24vdc)		24 VDC	8
	COM		Analog sensor common		Ground	4
	IAQ	IAQ	Indoor air quality sensor	return/space	4–20 mA input	6
	SPRH	SP.RH or OAQ	Relative humidity sensor or Outdoor air quality sensor	field installed	4–20 mA input	2
	RMOC	RM.OC	Remote occupancy switch	field installed	24 VAC input	10
	ENTH	ENTH or IAQ.S	Outdoor enthalpy switch, or Indoor air quality switch	economizer, or return/space	24 VAC input	12
	R–2		24 VAC power Transformer 2		24 VAC	15
	C–2		Transformer 2 Common		24 VAC common	16

*Point name displayed on the Scrolling Marquee or Navigator.

Low Voltage Terminal Boards (TB A and TB B)

There are two terminal boards with 16 terminals each, and oriented one mounted above the other. The front have screw terminals and the back have spade connectors. These terminal boards provide a connection point for the thermostat or space sensor and for most field-installed accessories. See Table 20.

Communication Interface Board (CIB)

This circuit board provides a field connection point for unit communications. The Local Equipment Network (LEN) RJ-11 connector allows a handheld Navigator to be plugged in to access the unit's menus. The Carrier Comfort Network® (CCN) RJ-11 connector or the CCN screw terminals allow building communication connections. See Fig. 19.

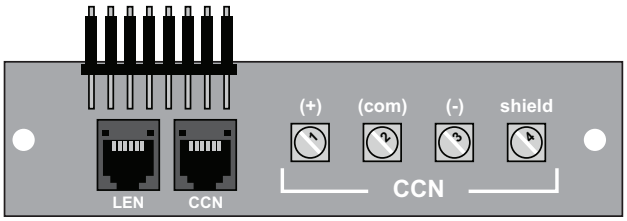

C11508

Fig. 19 - Communications Interface Board (CIB)

Central Terminal Board (CTB)

This circuit board is a simple trace board that serves as a junction point between components and the ComfortLINK system. It is the distribution center for transformer 1's power. The integrated gas controller (IGC), electric heater control, compressor control, and unit shutdown all feed through this trace board. See Fig. 20 and Table 21 for the connections through this board.

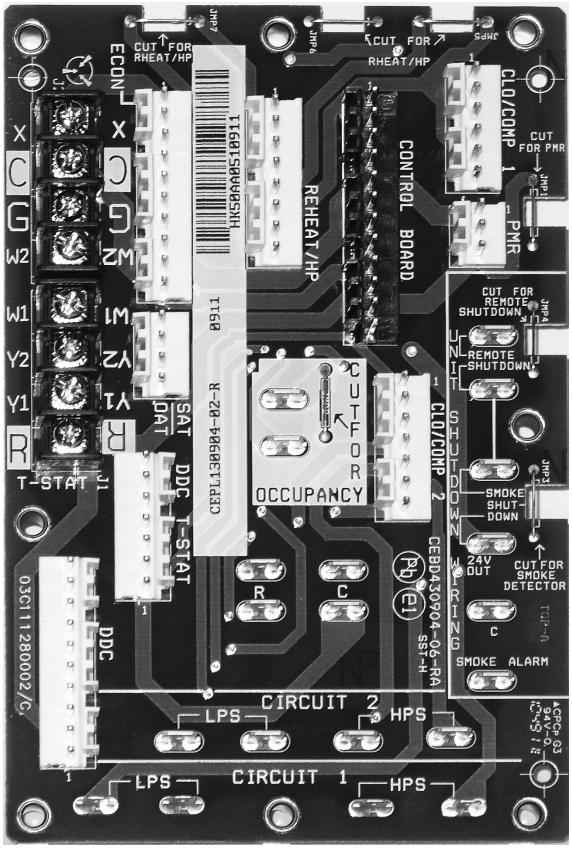

C11509

Fig. 20 - Central Terminal Board (CTB)

Table 21 – Central Terminal Board (CTB) Connections

CONNECTION LABEL	PIN NUMBER	POINT DESCRIPTION	24Vac FROM	24Vac TO
DDC T'STAT	7	Compressor 1 Call	MBB	ECON
	6	Compressor 2 Call	MBB	ECON
	5	Heat Stage 1 Call	MBB	CONTL BOARD
	4	Heat Stage 2 Call	MBB	CONTL BOARD
ECON	1,2	Comp 1 Call jumper	DDC T'STAT	CLO1/COMP1
	3,4	Comp 2 Call jumper	DDC T'STAT	CLO2/COMP2
CLO1/ COMP1	3	Comp 1 Contactor Common	CTB C	C1 – Coil
	4,5	Comp 1 Jumper	ECON	CIRCUIT 1 LPS
	6	Comp 1 Contactor Signal	CIRCUIT 1 HPS	C1 – Coil
CLO2/ COMP2	3	Comp 2 Contactor Common	CTB C	C1 – Coil
	4,5	Comp 2 Jumper	ECON	CIRCUIT 2 LPS
	6	Comp 2 Contactor Signal	CIRCUIT 2 HPS	C1 – Coil
	7	ODF Contactor Signal	ECON	OFC1 – Coil
CIRCUIT 1	HPS	Comp 1 High Pressure Switch	CIRCUIT 1 LPS	CLO1/COMP1
	LPS	Comp 1 jumper	CLO1/COMP1	CIRCUIT 1 HPS
CIRCUIT 2	HPS	Comp 2 High Pressure Switch	CIRCUIT 2 LPS	CLO2/COMP2
	LPS	Comp 2 jumper	CLO2/COMP2	CIRCUIT 2 HPS
CONTRL BOARD	2	Heat Stage 2 Call	DDC T'STAT	Gas Valve or PL3
	3	Heat Stage 1 Call	DDC T'STAT	IGC–W or PL3
	4	IGC Common/Ground	CTB C	IGC C
	5	Transformer 1 Common/Ground	TRAN1 Common	CTB C
	6	IGC Call for Indoor fan	IGC IFO	CONTL BOARD
	7	IGC Call for Indoor fan	CONTL BOARD	MBB
	8	IGC power (T1J9)	CTB R	IGC R
	9	Transformer 1 Power (T1J1)	TRAN1 24Vac	UNIT SHUTDOWN
	10	Indoor Fan overload signal (T1J9)	Fan overload	CTB R
	11	Indoor Fan overload source (T1J8)	PMR	Fan overload
PMR	1	Ground	CTB C	PMR Device
	2	Phase Monitor Source (T1J6)	UNIT SHUTDOWN	PMR Device
	3	Phase Monitor Normally Closed Signal (T1J7)	PMR Device	CONTL BOARD
UNIT SHUTDOWN	REMOTE SHUTDOWN	Remote Disable Switch if installed (T1J4 and T1J5)	SMOKE SHUTDOWN	PMR
	SMOKE SHUTDOWN	Normally Closed Smoke Detector Contact (T1J3)	Smoke Detector	REMOTE SHUTDOWN
	24V OUT	Smoke Detector Controller Power (T1J2)	CONTL BOARD	Smoke Detector
	C	Smoke Detector Controller Common	CTB C	Smoke Detector
R	Spades	Transformer 1 Power after Safety Chain (T1J9)	CONTL BOARD	
C	Spades	Ground	CONTL BOARD	

The References above for T1J1 through T1J9 are to show the path of transformer 1 as is goes through the board and safety devices.

Scrolling Marquee Display

This device is the keypad interface used to access rooftop information, read sensor values, and test the unit. (See Fig. 21.) The Scrolling Marquee display is a 4-key, 4-character, 16-segment LED (light-emitting diode) display. Eleven mode LEDs are located on the display as well as an Alarm Status LED. See Basic Control Usage section for further details.

Accessory Navigator™ Display

The accessory hand-held Navigator display can be used with 48/50HC units. (See Fig. 22.) The Navigator display operates the same way as the Scrolling Marquee device. The Navigator display plugs into the LEN port on either TB or the ECB board.

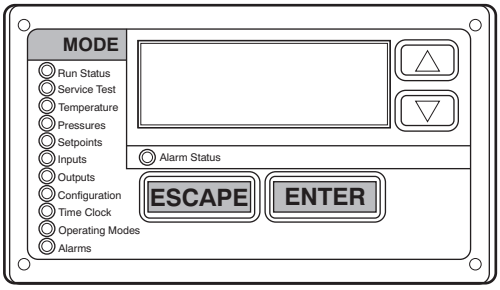

C06320

Fig. 21 - Scrolling Marquee

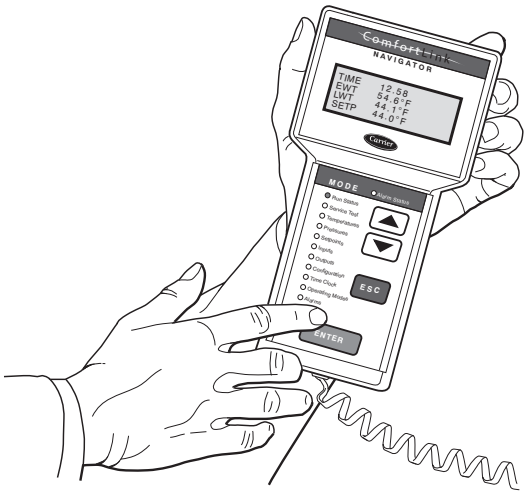

C06321

Fig. 22 - Accessory Navigator™ Display

Carrier Comfort Network (CCN)® Interface

The units can be connected to the CCN if desired. The communication bus wiring is a shielded, 3-conductor cable with drain wire and is field supplied and installed. The system elements are connected to the communication bus in a daisy chain arrangement. (See Fig. 23.) The positive pin of each system element communication connector must be wired to the positive pins of the system elements on either side of it. This is also required for the negative and signal ground pins of each system element. Wiring connections for CCN should be made at the CIB. (See Figs. 12 and 13.) Consult the CCN Contractor's Manual for further information.

NOTE: Conductors and drain wire must be 20 AWG (American Wire Gauge) minimum stranded, tinned copper. Individual conductors must be insulated with PVC, PVC/nylon, vinyl, Teflon, or polyethylene. An aluminum/polyester 100% foil shield and an outer jacket of PVC, PVC/nylon, chrome vinyl, or Teflon with a minimum operating temperature range of –20°C to 60°C is required. See Table below for acceptable wiring.

MANUFACTURER	PART NO.
Alpha	2413 or 5463
Belden	8772
Carol	C2528
West Penn	302

It is important when connecting to a CCN communication bus that a color-coding scheme be used for the entire network to simplify the installation. It is recommended that red be used for the signal positive, black for the signal negative and white for the signal ground. Use a similar scheme for cables containing different colored wires.

At each system element, the shields of its communication bus cables must be tied together. The shield screw on CIB can be used to tie the cables together. If the communication bus is entirely within one building, the resulting continuous shield must be connected to a ground at one point only. The shield screw on CIB is not acceptable for grounding. If the communication bus cable exits from one building and enters another, the shields must be connected to grounds at the lightning suppressor in each building where the cable enters or exits the building (one point per building only). To connect the unit to the network:

1. Turn off power to the control box.
2. Cut the CCN wire and strip the ends of the red (+), white (ground), and black (–) conductors. (Substitute appropriate colors for different colored cables.)
3. Connect the red wire to (+) terminal on CIB, the white wire to COM terminal, and the black wire to the (–) terminal.
4. The RJ14 CCN connector on CIB can also be used, but is only intended for temporary connection (for example, a laptop computer running Carrier network software).
5. Restore power to unit.

IMPORTANT: A shorted CCN bus cable will prevent some routines from running and may prevent the unit from starting. If abnormal conditions occur, unplug the connector. If conditions return to normal, check the CCN connector and cable. Run new cable if necessary. A short in one section of the bus can cause problems with all system elements on the bus.

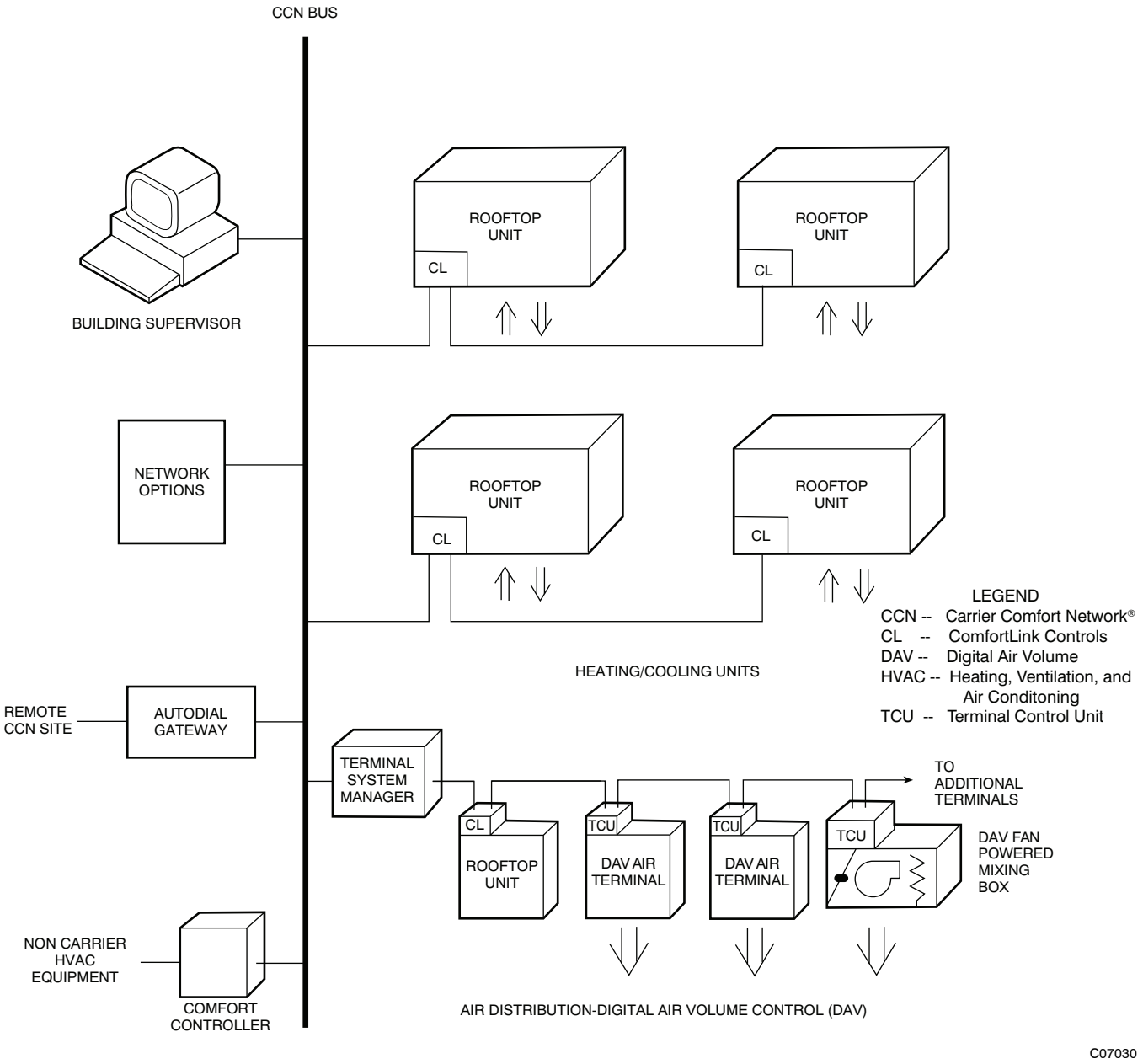

Fig. 23 - CCN System Architecture

EnergyX

Units equipped with Optional EnergyX have a factory installed energy recovery ventilator (ERV). The ERV is used to pre-condition outside air as it is brought into the rooftop unit. To do this it uses building air and an enthalpy wheel. It can also have a wheel bypass that acts as an economizer to allow free cooling. In Appendix A there are ERV points for display under Outside Air Unit (OAU) menus. These points and ERV specifics are explained in the EnergyX Supplemental Installation Instructions contained in the unit's information packet.

Protective Devices

Compressor Protection

Overcurrent

Each compressor has internal line break motor protection.

Overtemperature

Each compressor has an internal protector to protect it against excessively high discharge gas temperatures.

High-Pressure Switch

If the high-pressure switch trips, the compressor will shut down and the compressor safety alarm should trip. Refer to the Alarm section for compressor safety alarms.

Evaporator Fan Motor Protection

Indoor-fan motors less than 5 hp are equipped with internal overcurrent and overtemperature protection. Protection devices reset automatically. Disconnect and lock out power when servicing motor. Indoor-fan motors 5 hp and larger are equipped with a manual reset, calibrated trip, magnetic circuit breaker and overcurrent protection. Do not bypass connections or increase the size of the breaker to correct trouble. Determine the cause and correct it before resetting the breaker.

Condenser-Fan Motor Protection

Each condenser-fan motor is internally protected against overtemperature.

Fuses are located in the control box and feed power to the condenser fan motors. Always replace blown fuses with the correct size fuse as indicated on the unit fuse label.

Saturated Suction Pressure (SSP)

If the SSP for a particular circuit is reading below the alarm set point for an extended period of time, that circuit will be shut down. After 15 minutes, the alarm will automatically reset. If this alarm occurs 3 times consecutively, the circuit will remain locked out until an alarm reset is initiated via CCN or manually via the Scrolling Marquee display (see Alarms and Alerts section for more details).

Condensate Overflow Switch (COFS)

A separate factory installed device can detect a full drain pan. This device consists of a pan sensor to detect the water level and a relay control switch to read the sensor. The control switch is located in the unit control box and will trip out the compressors on overflow detection. Since this device is in series with the compressor contactor and high pressure switch on any given circuit, ComfortLINK does not directly read this. The relay switch is a normally open device that closes when power is applied; this allows the compressor to be energized without problem. If the sensor detects high water levels for 10 seconds straight, it will open the contact breaking the compressor call. The switch will also turn its red LED on. If the water level is low enough for 5 minutes the relay will close again allowing the compressor call. A blinking red LED on the switch indicates that the sensor has been disconnected.

Field-Installed Accessories

Space Temperature Sensor (T-55)

The T-55 space temperature sensor (part no. 33ZCT55SPT) is a field-installed accessory. The sensor is installed on a building interior wall to measure room air temperature. The T-55 sensor also includes an override button on the front cover to permit occupants to override the Unoccupied Schedule (if programmed). The jumper wire in the installer's packet must be connected between R and W1 when using a T-55 device.

TB A-SPT+ . . . . . Sensor Input

TB A-SPT– . . . . . Sensor Common

Space Temperature Sensor (T-56)

The T-56 space temperature sensor (part no. 33ZCT56SPT) is a field-installed accessory. This sensor includes a sliding scale on the front cover that permits an occupant to adjust the space temperature set point remotely. The T-56 sensor also includes an override button on the front cover to allow occupants to override the unoccupied schedule (if programmed). The jumper wire in the installer's packet must be connected between R and W1 when using a T-56 device.

TB A-SPT+ . . . . . Sensor Input

TB A-SPT– . . . . . Sensor Common

TB A-SPTO . . . . . Setpoint Offset Input

Space Temperature Sensor (T-58)

The T-58 space temperature sensor (part no. 33ZCT58SPT) is a field-installed accessory. The T-58 sensor communicates with the *Comfort*Link controller, providing space temperature, heating and cooling set points, and mode operation information. The jumper wire in the installer's packet must be connected between R and W1 when using a T-58 device.

Refer to the T-58 installation instructions for information on installing and configuring the T-58 sensor.

Each T-58 sensor must have a unique address on the CCN. Each T-58 sensor must also be configured with the address of the unit control it is communicating to.

Space Temperature Sensor Averaging

See Fig. 24 for space temperature averaging with T-55 sensors only. If the use of one T-56 sensor is required, refer to Fig. 25.

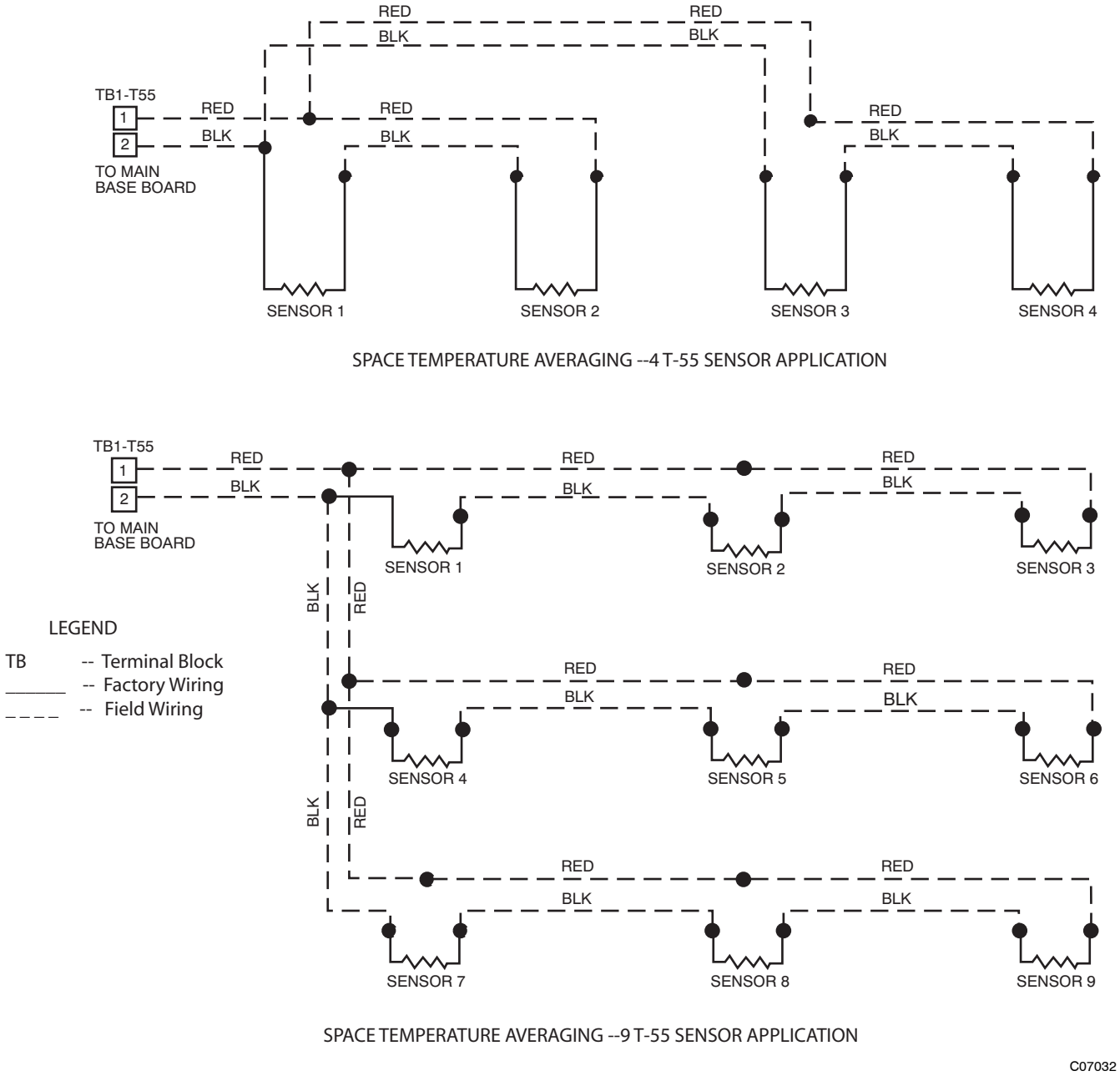

Fig. 24 - Space Temperature Sensor Averaging

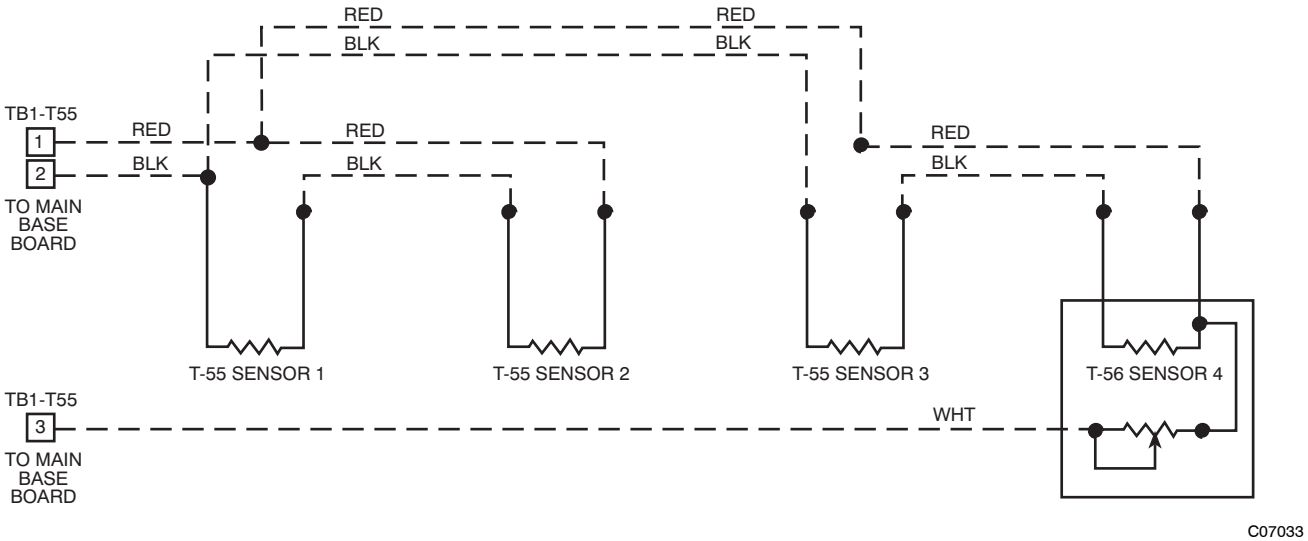

Fig. 25 - Space Temperature Sensor Averaging with 3 T-55 Sensors and One T-56 Sensor

Carrier Accessory Kits

There are specific accessory kits sold for various field installed accessories. These kits vary based on model, size, voltage, manufacture date, and duct orientation. Some of these kits include Economizer, Power Exhaust, and Electric Heat. Refer to the Controls Quick Set-Up section for configuration and more information on these accessories.

Two-Position Damper

The two-position outdoor air damper accessory usage depends on model size and return duct orientation. This accessory wires directly into the low voltage circuit for the indoor fan control. No other control configuration is needed.

Indoor Air Quality

The indoor air quality (IAQ) sensor (part no. 33ZCSENCO2) is a field-installed accessory which measures CO_2 levels in the air. When installing this sensor, an ECB board must be installed and the unit must be configured for IAQ use by setting ***Configuration→AIR.Q→IA.CF*** to a value of 1, 2, or 3. See the Indoor Air Quality section for more information.

TB B-IAQ ..... 4-20mA Input

TB B-COM .... Sensor Common

TB B-R-2 ..... 24vac Output

TB B-C-2 ..... Common (GND)

Outdoor Air Quality

The outdoor air quality (OAQ) sensor is a field-installed accessory that measures CO_2 levels in the air. When installing this sensor, an ECB board must be installed and the unit must be configured for OAQ use by setting ***Configuration→AIR.Q→OA.CF*** to a value of 1 or 2. See the Indoor Air Quality section for more information.

TB B-SARH ... 4-20mA Input

TB B-COM .... Sensor Common

TB B-R-2 ..... 24vac Output

TB B-C-2 ..... Common (GND)

Smoke Detectors

The smoke detectors are field-installed accessories. These detectors can detect smoke in either the return air or supply and return air. When installing either detector, the unit must be configured for fire shutdown by setting ***Configuration→UNIT→FS.SW*** to normally open (1) or normally closed (2).

TB A-FDWM .. Discrete Input to Board

Filter Status

The filter status accessory is a field-installed accessory. This accessory detects plugged filters. When installing this accessory, the unit must be configured for filter status by setting ***Configuration→UNIT→FL.SW*** to normally open (1) or normally closed (2). Normally open (1) is the preferred configuration.

Filter status wires are pre-run in the unit harness and located near the switch installation location. Refer to the Filter Accessory installation instructions for more information.

Fan Status

The fan status accessory is a field-installed accessory. This accessory detects when the indoor fan is blowing air. When installing this accessory, the unit must be configured for fan status by setting ***Configuration→UNIT→FN.SW*** to normally open (1) or normally closed (2). Normally open (1) is the preferred configuration.

Fan status wires are pre-run in the unit harness and located near the switch installation location. Refer to the Fan Accessory installation instructions for more information.

Enthalpy Sensors

The enthalpy accessories (part no. CRENTSNG002A00 and CRENTDIF002A00) are field-installed accessories. The first accessory (outdoor air only) determines when the enthalpy is low relative to a fixed reference. Adding the second accessory (return air) compares the enthalpy between the outdoor and return airstreams. In each case, the enthalpy 4 to 20 mA signals are converted to a switch output which is read by the ECB. When installing this accessory, the unit must be configured for enthalpy-based control by setting ***Configuration→ECON→EN.SW*** to normally open (1). See Fig. 12 and Fig. 13 for wiring details.

Normal status is an active switch which tells the control that enthalpy is LOW. The actual switch terminal LOW is normally closed. Refer to the Enthalpy Kit installation instructions for more information on the installation.

Return/Supply Air Temperature Sensor

The temperature sensor (part no. 33ZCSENSAT) is a field-installed accessory which may be installed on the common return air duct and/or the common supply air duct near the unit. The duct return air temperature (RAT) may be selected for display. When installing the sensor, the unit must be configured by setting ***Configuration→UNIT→RAT.S*** to YES. Using a RAT will allow differential dry bulb control of the economizer. The duct supply air temperature (SAT) may be used to replace the SAT sensor that is internal to the unit. A supply duct SAT measurement is valid for heating mode display while the factory-standard internal SAT is not valid for heating due to its location upstream of the heating section. When installing the supply duct SAT, the unit must be configured by setting ***Configuration→UNIT→SAT.H*** to ENBL. A SAT sensor in the supply duct is the preferred configuration for systems with Carrier variable volume and temperature (VVT®) accessory controls.

The field connection terminal board (TB B) has SAT and RAT terminals. When installing field sensors, use these terminals accordingly to connect into the MBB.

IMPORTANT: When wiring a field SAT sensor, the factory installed on must be disconnected from the back of the terminal board.

Space Humidistat

The Space Humidistat (part no. --HL--38MG-029) is a wall mounted device with an adjustable setpoint to control humidity levels. The humidistat input is provided on the field connection terminal board. The Space Humidity Switch configuration, ***Configuration→UNIT→RH.SW***, identifies the normally open or normally closed status of this input at LOW humidity.

TB B-HUM .... Discrete Input to Board

TB B-R-2 ..... 24 VAC Dry Contact Source

NOTE: The humidistat terminals are only in use when the unit is equipped with the Humidi-MiZer factory option.

Space Humidity Sensor

The space relative humidity sensor (part no. 33ZCSENDRH-01 duct mount or 33ZCSENSRH-01 wall mount) is a field-installed accessory. The space relative humidity (RHS) may be selected for use if the outdoor air quality sensor (OAQ) is not used and an economizer board is installed. When installing the relative humidity sensor, the unit must be configured by setting ***Configuration→UNIT→RH.S*** to YES.

TB B-LPWR ... 24 VDC Loop Power

TB B-SPRH .... 4-20mA Input Signal

APPENDIX A — LOCAL DISPLAY AND CCN TABLES

MODE — RUN STATUS

ITEM	EXPANSION	RANGE	UNITS	CCN TABLE/ Sub–TABLE	CCN POINT	CCN WRITE STATUS
RUN STATUS				STATUS DISPLAY		
VIEW	Auto View of Run Status			(VIEW = Display only)		
HVAC	HVAC Mode Status	1=Disabled 2=Ventilation 3=Cool 4=Heat			HVACMODE	
OCC	Currently Occupied	No/Yes			OCCUPIED	
SAT	Suppy Air Temperature	xxx..x	°F		SAT_DISP	
ALRM	Current Alarms & Alerts	xx			ALRMALRT	
TIME	Time of Day	xx.xx	hh.mm		TIMECOPY	
VERS	Software Version Numbers			VERSIONS		
MBB	CESR131504–xx–xx	(xx–xx in table)			MODEL_NUMBER_01	
ECB	CESR131249–xx–xx				MODEL_NUMBER_02	
MARQ	CESR131171–xx–xx				MODEL_NUMBER_03	
VFD1	FW Version – xxxx				MODEL_NUMBER_04	
NAVI	CESR131227–xx–xx					
MODE	Control Modes			MODEDISP		
SYS	Current System Mode	1=Disabled 2=Run Enabled 3: Service Test			SYS_MODE	
HVAC	Current HVAC Mode	1=Disabled 2=Ventilation 3=Cool 4=Heat			HVACMODE	
F. MOD	Indoor Fan Mode	0=Off 1=High 2=Low Cool 3=Vent 4=IAQ Override 5=Low Heat 6=Dehum 7=Low Free Cool			IDF_MODE	
HV.DN	Remote HVAC Mode Disable	No/Yes			HVACDOWN	forcible
EFF.C	Cool Setpoint In Effect	xx.x	°F		CSP_EFF	
EFF.H	Heat Setpoint In Effect	xx.x	°F		HSP_EFF	
OCC	Currently Occupied	No/Yes			OCCUPIED	forcible
T.OVR	Timed Override in Effect	No/Yes			MODETOVR	
LINK	Linkage Active	No/Yes			MODELINK	
D.LMT	Demand Limit In Effect	No/Yes			MODEDMDL	
C.LOC	Compressor OAT Lockout	No/Yes			COMPLOCK	
H.LOC	Heat OAT Lockout	No/Yes			HEATLOCK	
OK.EC	OK to Use Economizer?	No/Yes			ECONCOOL	
COOL	Cooling Status			COOLDISP		
DMD.C	Cooling Demand	xxx.x	^F		COOL_DMD	
AVL.C	Available Cooling Stages	x			AVLCSTGS	
REQ.C	Requested Cooling Stages	x			REQCSTGS	
MAX.C	Max Allowed Cool Stages	x			MAXCSTGS	forcible
LMT.C	Max Cool Stage In Effect	x			CSTGLIMT	
F.SPD	Commanded Fan Speed	xxx	%		FANSPEED	
CRC	Cool – > Reheat1 Control	Off/On			CRC	
CIR.A	Refrigerant Circuit A					
CMP.A	Circuit A Compressor	Off/On			COMP_A	
TG.A	Timeguard A	xxx	sec		TIMGD_A	
RH2.A	Reheat2 Valve A	Off/On			RH2_A	
SST.A	Sat. Suction Temp A	xxx.x	°F		SST_A	
SSP.A	Suction Pressure A	xxx.x	psig		SSP_A	
SCT.A	Sat. Condenser Temp A	xxx.x	°F		SCT_A	
SCP.A	Condenser Pressure A	xxx.x	psig		SCP_A	
CIR.B	Refrigerant Circuit B					
CMP.B	Circuit B Compressor	Off/On			COMP_B	
TG.B	Timeguard B	xxx	sec		TIMGD_B	
RH2.B	Reheat2 Valve B,C	Off/On			RH2_B	
SST.B	Sat. Suction Temp B	xxx.x	°F		SST_B	
SSP.B	Suction Pressure B	xxx.x	psig		SSP_B	
SCT.B	Sat. Condenser Temp B	xxx.x	°F		SCT_B	
SCP.B	Condenser Pressure B	xxx.x	psig		SCP_B	
HEAT	Heating Status			HEATDISP		
DMD.H	Heating Demand	xxx.x	^F		HEAT_DMD	
AVL.H	Available Heating Stages	x			AVLHSTGS	
REQ.H	Requested Heating Stages	x			REQHSTGS	
MAX.H	Max Allowed Heat Stages	x			MAXHSTGS	forcible
LMT.H	Max Heat Stage In Effect	x			HSTGLIMT	
F.SPD	Commanded Fan Speed	xxx	%		FANSPEED	
HT.1	Heat Stage 1 Relay	Off/On			HEAT_1	
TG.H1	Heat Stage 1 Timeguard	xxx	sec		TIMGD_H1	
HT.2	Heat Stage 2 Relay	Off/On			HEAT_2	
TG.H2	Heat Stage 2 Timeguard	xxx	sec		TIMGD_H2	

APPENDIX A — LOCAL DISPLAY AND CCN TABLES

MODE — RUN STATUS (cont)

ITEM	EXPANSION	RANGE	UNITS	CCN TABLE/ Sub–TABLE	CCN POINT	CCN WRITE STATUS
ECON	Economizer Status			ECONDISP		
EC.CP	Econo Commanded Position	xxx	%		ECONOCMD	
EC.AP	Econo Actual Position	xxx	%		ECONOPOS	
EC.MP	Min Position in Effect	xxx	%		MIN_POS	forcible
IAQ.S	IAQ Level (switch)	Low/High			IAQIN	
IAQ	IAQ Level (sensor)	xxxx			IAQ	
OAT	Outdoor Air Temperature	xxx.x	°F		OA_TEMP	
RAT	Return Air Temperature	xxx.x	°F		RETURN_T	
ENTH	Outdoor Enthalpy Switch	Low/High			ENTHALPY	
OAQ	OAQ Level (sensor)	xxxx			OAQ	
PE.1	Power Exhaust 1 Relay	Off/On			PE_1	
PE.2	Power Exhaust 2 Relay	Off/On			PE_2	
S.VFD	SUPPLY FAN VFD			VFD_DATA		
	VFD1 Status Word 1	NNNNN			VFD1STAT	
SPD	VFD1 Actual Speed %	NNN.n	%		VFD1_SPD	
RPM	VFD1 Actual Motor RPM	NNNNN			VFD1RPM	
FREQ	VFD1 Actual Motor Freq	NNN.n			VFD1FREQ	
AMPS	VFD1 Actual Motor Amps	NNN.n	amps		VFD1AMPS	
TORQ	VFD1 Actual Motor Torque	NNNN.n	%		VFD1TORQ	
PWR	VFD1 Actual Motor Power	NNNN.nn			VFD1PWR	
VDC	VFD1 DC Bus Voltage	NNNN	volts		VFD1VDC	
V.OUT	VFD1 Output Voltage	NNNN	volts		VFD1VOUT	
TEMP	VFD1 Transistor Temp (C)	NNN			VFD1TEMP	
RUN.T	VFD1 Cumulative Run Time	NNNNN	hours		VFD1RUNT	
KWH	VFD1 Cumulative kWh	NNNNN			VFD1KWH	
LFC	VFD1 Last Fault Code	NNNNN			VFD1LFC	
(CCN Points Only)	VFD1 DI1 State	Open/Close			VFD1_DI1	
	VFD1 DI2 State	Open/Close			VFD1_DI2	
	VFD1 DI3 State	Open/Close			VFD1_DI3	
	VFD1 DI4 State	Open/Close			VFD1_DI4	
	VFD1 DI5 State	Open/Close			VFD1_DI5	
	VFD1 DI6 State	Open/Close			VFD1_DI6	
	VFD1 AI1 (% of range)	NNN.n	%		VFD1_AI1	
	VFD1 AI2 (% of range)	NNN.n	%		VFD1_AI2	
OAU	Outside Air Unit Status			OAUDISP		
OA.RN	OAU System Run State	1=AUTO 2=OFF 3=TEST			OAU_RUN	
OA.OP	OAU Operating Mode	0=Off 1=ERV (DCV) 2=Free Cooling 3=OA Tempering 4=Defrost 5=Test 6=Ext. Mode 1 7=Ext. Mode 2 8=Ext. Mode 3			OAU_MODE	
UPC	UPC Software Version	xxxx			UPC_VER	
OAU	OA Unit Software Version	xxxx			OAU_VER	
2P.DM	OAU 2–position Damper	Close/Open			OAUDMPR	
WHL	OAU Wheel Speed	xxx	%		OAUWHEEL	
LAT	OAU Leaving Air Temp	xxx.x	°F		OAU_LAT	
EXAT	OAU Exhaust Air Temp	xxx.x	°F		OAU_EXAT	
OA.MN	Minimum Outside Air CFM	xxxxx	CFM		MINOACFM	
DCV.M	Min DCV Outside Air CFM	xxxxx	CFM		MINDCVSP	
OA.FS	OAU OA Fan Speed	xxx	%		OAFANSPD	
A.OA	Actual Outside Air CFM	xxxxx	CFM		ACTOACFM	
C.OA	Command Outside Air CFM	xxxxx	CFM		CMDOACFM	
PE.OF	Power Exhaust CFM Offset	xxxxx	CFM		EXOFFSET	
EX.FS	OAU Exhaust Fan Speed	xxx	%		OAUPESPD	
A.EX	Actual Exhaust Air CFM	xxxxx	CFM		ACTEXCFM	
C.EX	Command Exhaust Air CFM	xxxxx	CFM		CMDEXCFM	
BP.SP	Building Pressure Setpnt	x.xx	in H2O		OAU_BPSP	
BP	Building Pressure	x.xx	in H2O		OAU_BP	
TM.LO	OA Tempring Lockout Temp	xx	°F		OATMPLOC	
TM.SP	OA Tempring SAT Setpoint	xx	°F		OATMPSPT	
OA.HT	OAU Tempering Heater	xxx	%		OAHEATER	
HRS	Component Run Hours			STRTHOUR		
A1	Compressor A1 Run Hours	xxxxx.xx	hours		HR_A1	forcible
B1	Compressor B1 Run Hours	xxxxx.xx	hours		HR_B1	forcible
IDF1	Indoor Fan 1 Run Hours	xxxxx.xx	hours		HR_IDF1	forcible
IDF2	Indoor Fan 2 Run Hours	xxxxx.xx	hours		HR_IDF2	forcible
IDF3	Indoor Fan 3 Run Hours	xxxxx.xx	hours		HR_IDF3	forcible
HT.1	Heat Stage 1 Run Hours	xxxxx.xx	hours		HR_HTR_1	forcible
HT.2	Heat Stage 2 Run Hours	xxxxx.xx	hours		HR_HTR_2	forcible
PE.1	Power Exhaust1 Run Hours	xxxxx.xx	hours		HR_PE_1	forcible
PE.2	Power Exhaust2 Run Hours	xxxxx.xx	hours		HR_PE_2	forcible
ALRM	Alarm Relay Run Hours	xxxxx.xx	hours		HR_ALM	forcible
CRC	Reheat1 Valve Run Hours	xxxxx.xx	hours		HR_CRC	forcible
RH2.A	Reheat2 Valve A Run Hrs	xxxxx.xx	hours		HR_RH2_A	forcible
RH2.B	Reheat2 Valve BC Run Hrs	xxxxx.xx	hours		HR_RH2_B	forcible

MODE — RUN STATUS (cont)

ITEM	EXPANSION	RANGE	UNITS	CCN TABLE/ Sub–TABLE	CCN POINT	CCN WRITE STATUS
STRT	Component Starts					
A1	Compressor A1 Starts	xxxxxx			ST_A1	forcible
B1	Compressor B1 Starts	xxxxxx			ST_B1	forcible
IDF1	Indoor Fan 1 Starts	xxxxxx			ST_IDF1	forcible
IDF2	Indoor Fan 2 Starts	xxxxx.xx			ST_IDF2	forcible
IDF3	Indoor Fan 3 Starts	xxxxx.xx			ST_IDF3	forcible
HT.1	Heat Stage 1 Starts	xxxxxx			ST_HTR_1	forcible
HT.2	Heat Stage 2 Starts	xxxxxx			ST_HTR_2	forcible
PE.1	Power Exhaust 1 Starts	xxxxxx			ST_PE_1	forcible
PE.2	Power Exhaust 2 Starts	xxxxxx			ST_PE_2	forcible
ALRM	Alarm Relay Starts	xxxxxx			ST_ALM	forcible
CRC	Reheat1 Valve Starts	xxxxxx			ST_CRC	forcible
RH2.A	Reheat2 Valve A Starts	xxxxxx			ST_RH2_A	forcible
RH2.B	Reheat2 Valve BC Starts	xxxxxx			ST_RH2_B	forcible
(ALRMDISP) = CCN only)				ALRMDISP		
	Active Alarm 1 Code	xxx			ALMCODE1	
	Active Alarm 2 Code	xxx			ALMCODE2	
	Active Alarm 3 Code	xxx			ALMCODE3	
	Active Alarm 4 Code	xxx			ALMCODE4	
	Active Alarm 5 Code	xxx			ALMCODE5	
	Reset All Current Alarms	No/Yes			ALRESET	forcible
	Reset Alarm History	No/Yes			ALHISCLR	forcible
(GENERIC = CCN only)				GENERIC	up to 20 points	
(LON_DATA = CCN only)				LON_DATA		
	nviSpaceTemp	xxx.x	°F		NVI_SPT	forcible
	nviSetPoint	xxx.x	°F		NVI_SP	forcible
	nvoSpaceTemp	xxx.x	°F		NVO_SPT	
	nvoUnitStatus.mode	xxxx			NVO_MODE	
	nvoUnitStatus.heat_out_p	xxx.x	%		NVO_HPRI	
	nvoUnitStatus.heat_out_s	xxx.x	%		NVO_HSEC	
	nvoUnitStatus.cool_out	xxx.x	%		NVO_COOL	
	nvoUnitStatus.econ_out	xxx.x	%		NVO_ECON	
	nvoUnitStatus.fan_out	xxx	%		NVO_FAN	
	nvoUnitStatus.in_alarm	xxx			NVO_ALRM	
	nviSetPtOffset	xxx.x	^F		NVI_SPTO	forcible
	nviOutsideTemp	xxx.x	°F		NVI_OAT	forcible
	nviOutsideRH	xxxx.x	%		NVI_OARH	forcible
	nvoEffectSetPt	xxx.x	°F		NVO_EFSP	
	nvoOutsideTemp	xxxx.x	°F		NVO_OAT	
	nvoOutsideRH	xxx.x	%		NVO_OARH	
	nviSpaceRH	xxx.x	%		NVI_SPRH	forcible
	nviCO2	xxxxx			NVI_CO2	forcible
	nvoCO2	xxxxx			NVO_CO2	
	nvoTEMP1	xxx.x	°F		NVO_SAT	
	nvoTEMP2	xxx.x	°F		NVO_RAT	
	nviPCT1	xxx.x	%		NVI_RHSP	forcible
	nvoPCT1	xxx.x	%		NVO_SPRH	
	nviDISCRETE1	Off/On			NVI_FSD	forcible
	nviDISCRETE2	No/Yes			NVI_OCC	forcible
	nviDISCRETE3	Off/On			NVI_IAQD	forcible
	nvoDISCRETE1	Off/On			NVO_FSD	
	nvoDISCRETE2	No/Yes			NVO_OCC	
	nvoDISCRETE3	Off/On			NVO_IAQD	
	nciCO2Limit	xxxxx			NCI_CO2	forcible
	nciSetPnts.occupied_cool	xxx.x	°F		NCI_OCSP	forcible
	nciSetPnts.standby_cool	xxx.x	°F		NCI_SCSP	forcible
	nciSetPnts.unoccupd_cool	xxx.x	°F		NCI_UCSP	forcible
	nciSetPnts.occupied_heat	xxx.x	°F		NCI_OHSP	forcible
	nciSetPnts.standby_heat	xxx.x	°F		NCI_SHSP	forcible
	nciSetPnts.unoccupd_heat	xxx.x	°F		NCI_UHSP	forcible

APPENDIX A — LOCAL DISPLAY AND CCN TABLES

MODE — SERVICE TEST

ITEM	EXPANSION	RANGE	UNITS	CCN TABLE/Sub–TABLE	CCN POINT
SERVICE TEST					
TEST	Field Service Test Mode	Off/On		(TEST = display only)	
INDP	Test Independent Outputs			TESTINDP	
ECON	Economizer Position Test	0 to 100	%		S_ECONO
E.CAL	Calibrate Economizer	Off/On			S_ECOCAL
PE.1	Power Exhaust 1 Test	Off/On			S_PE_1
PE.2	Power Exhaust 2 Test	Off/On			S_PE_2
ALRM	Alarm Relay Test	Off/On			S_ALMOUT
OA.DM	OAU 2–position Damper	Close/Open			S_OADMPR
WHL	OAU Wheel Test	0 to 100	%		S_WHEEL
OA.OF	OAU OA Fan Speed Test	0 to100	%		S_OAFAN
OA.XF	OAU PE Fan Speed Test	0 to100	%		S_EXFAN
OA.HT	OAU Tempring Heater Test	0 to 100	%		S_OAHEAT
FANS	Test Fans			TESTFANS	
F.SPD	Indoor Fan Speed Test	0 to 100	%		S_FANSPD
F.MOD	IDF Fan Mode	0 to 7			S_IDFMOD
IDF1	Indoor Fan Test 1	Off/On			S_IDF_1
IDF2	Indoor Fan Test 2	Off/On			S_IDF_2
IDF3	Indoor Fan Test 3	Off/On			S_IDF_3
COOL	Test Cooling			TESTCOOL	
CMP.A	Cool A Test	Off/On			S_COMP_A
CMP.B	Cool B Test	Off/On			S_COMP_B
F.SPD	Reduced Cool Fan Speed	0 to 100	%		S_FSPDCL
HMZR	Test Humidimizer			TESTHMZR	
RH1.A	Reheat1 A Test	Off/On			S_RH1_A
RH1.B	Reheat1 B Test	Off/On			S_RH1_B
RH2.A	Reheat2 A Test	Off/On			S2_RH2_A
RH2.B	Reheat2 B Test	Off/On			S2_RH2_B
F.SPD	Reheat2 Fan Speed	0 to 100	%		S_FSPDRH
CRC	Cool–>Reheat1 Valve Test	Off/On			S_CRC
RHV.A	Reheat2 Valve A Test	Off/On			S_RH2_A
RHV.B	Reheat2 Valve B Test	Off/On			S_RH2_B
HEAT	Test Heating			TESTHEAT	
HT.1	Heat Stage 1 Test	Off/On			S_HEAT_1
HT.2	Heat Stage 2 Test	Off/On			S_HEAT_2
F.SPD	Reduced Heat Fan Speed	0 to 100	%		S_FSPDHT

MODE — TEMPERATURES

ITEM	EXPANSION	RANGE	UNITS	CCN TABLE/ Sub–TABLE	CCN POINT	CCN WRITE STATUS	DISPLAY WRITE STATUS
TEMPERATURES				STATUS DISPLAY			
AIR.T	Air Temperatures			UINPUT			
SAT	Supply Air Temperature	xxx.x	°F		SAT_DISP		
OAT	Outdoor Air Temperature	xxx.x	°F		OA_TEMP	forcible	forcible
SPT	Space Temperature	xxx.x	°F		SPACE_T	forcible	forcible
SPTO	Space Temperature Offset	xxx.x	^F		SPTO	forcible	forcible
RAT	Return Air Temperature	xxx.x	°F		RETURN_T	forcible	
REF.T	Refrigerant Temperatures	xxx.x	°F				
SST.A	Sat. Suction Temp A	xxx.x	°F		SST_A		
SCT.A	Sat. Condenser Temp A	xxx.x	°F		SCT_A		
SST.B	Sat. Suction Temp B	xxx.x	°F		SST_B		
SCT.B	Sat. Condenser Temp B	xxx.x	°F		SCT_B		

MODE — PRESSURES

ITEM	EXPANSION	RANGE	UNITS	CCN TABLE/ Sub–TABLE	CCN POINT	CCN WRITE STATUS	DISPLAY WRITE STATUS
PRESSURES				STATUS DISPLAY			
SSP.A	Suction Pressure A	xxx.x	psig	UINPUT	SSP_A		
SCP.A	Condenser Pressure A	xxx.x	psig		SCP_A		
SSP.B	Suction Pressure B	xxx.x	psig		SSP_B		
SCP.B	Condenser Pressure B	xxx.x	psig		SCP_B		

APPENDIX A — LOCAL DISPLAY AND CCN TABLES

MODE — INPUTS

ITEM	EXPANSION	RANGE	UNITS	CCN TABLE/ Sub–TABLE	CCN POINT	CCN WRITE STATUS	DISPLAY WRITE STATUS
INPUTS				STATUS DISPLAY			
STAT	Thermostat Inputs			UINPUT			
Y1	Thermostat Y1 Input	Off/On			Y1	forcible	
Y2	Thermostat Y2 Input	Off/On			Y2	forcible	
W1	Thermostat W1 Input	Off/On			W1	forcible	
W2	Thermostat W2 Input	Off/On			W2	forcible	
G	Thermostat G Input	Off/On			G	forcible	
GEN.I	General Inputs						
FIL.S	Filter Status Switch	Clean/Dirty			FILTSTAT	forcible	
FAN.S	Fan Status Switch	Off/On			FAN_STAT	forcible	
FDWN	Fire Shutdown Switch	Off/On			FIREDOWN	forcible	
ENTH	Outdoor Enthalpy Switch	Low/High			ENTHALPY	forcible	
RM.OC	Remote Occupancy Switch	Off/On			REM_OCC	forcible	
HUM	Space Humidity Switch	Low/High			HUM_STAT	forcible	
IGC.F	IGC Fan Request	Off/On			IDF_FDBK		
AIR.Q	Air Quality Inputs						
IAQ.S	IAQ Level (switch)	Low/High			IAQIN	forcible	forcible
IAQ	IAQ Level (sensor)	xxxx			IAQ	forcible	forcible
OAQ	OAQ Level (sensor)	xxxx			OAQ	forcible	forcible
SP.RH	Space Humidity Sensor	xxx.x	%		SPRH	forcible	forcible

MODE — OUTPUTS

ITEM	EXPANSION	RANGE	UNITS	CCN TABLE/ Sub–TABLE	CCN POINT	CCN WRITE STATUS	DISPLAY WRITE STATUS
OUTPUTS				STATUS DISPLAY			
FANS	Fan Outputs			UOUTPUT			
F.SPD	Commanded Fan Speed	xxx	%		FANSPEED		
IDF.1	Indoor Fan Speed Relay 1	Off/On			IDF_1		
IDF.2	Indoor Fan Speed Relay 2	Off/On			IDF_2		
IDF.3	Indoor Fan Speed Relay 3	Off/On			IDF_3		
COOL	Cool Outputs						
CMP.A	Circuit A Compressor	Off/On			COMP_A		
CMP.B	Circuit B Compressor	Off/On			COMP_B		
CRC	Cool–>Reheat1 Control	Off/On			CRC		
RH2.A	Reheat2 Valve A	Off/On			RH2_A		
RH2.B	Reheat2 Valve B	Off/On			RH2_B		
HEAT	Heat Outputs						
HT.1	Heat Stage 1 Relay	Off/On			HEAT_1		
HT.2	Heat Stage 2 Relay	Off/On			HEAT_2		
ECON	Economizer Outputs						
EC.CP	Econo Commanded Position	0 to 100	%		ECONOCMD	forcible	forcible
EC.AP	Econo Actual Position	0 to 100	%		ECONOPOS		
PE.1	Power Exhaust 1 Relay	Off/On			PE_1	forcible	
PE.2	Power Exhaust 2 Relay	Off/On			PE_2	forcible	
ALRM	Alarm Relay	Off/On			ALMOUT	forcible	

MODE — SET POINTS

ITEM	EXPANSION	RANGE	UNITS	DEFAULT	CCN TABLE/ Sub–TABLE	CCN POINT
SETPOINTS					SETPOINT CONFIGURATION SET_PNT	
OCSP	Occupied Cool Setpoint	55 to 80	°F	78		OCSP
UCSP	Unoccupied Cool Setpoint	65 to 95	°F	85		UCSP
OHSP	Occupied Heat Setpoint	55 to 80	°F	68		OHSP
UHSP	Unoccupied Heat Setpoint	40 to 80	°F	60		UHSP
GAP	Heat–Cool Setpoint Gap	2 to 10	^F	5		HCSP_GAP
STO.R	SPT Offset Range (+/–)	0 to 5	^F	5		SPTO_RNG
RH.SP	Space RH Occupied SP	30 to 100	%	50		SPRH_SP
RH.UN	Space RH Unoccupied SP	30 to 100	%	80		SPRH_USP
RH.DB	Space RH Deadband	2 to 20	%	8		SPRH_DB
RH.HB	Reheat Heat SP Deadband	–5 to 5	^F	2		RH_HSPDB
LCSP	Low Cool SAT Setpoint	55 to 75	°F	55 (03–07) 65 (08–28)		LCSASP
HCSP	High Cool SAT Setpoint	50 to 70	°F	55		HCSASP

APPENDIX A — LOCAL DISPLAY AND CCN TABLES

MODE — CONFIGURATION

ITEM	EXPANSION	RANGE	UNITS	DEFAULT	CCN TABLE/ Sub–TABLE	CCN POINT	PAGE NO.
CONFIGURATION					SERVICE CONFIGURATION		
DISP	Display Configuration				DISPLAY		
METR	Metric Display	Off/On		Off		DISPUNIT	13
LANG	Language Selection	0=English 1=Spanish 2=French 3=Portuguese		0		LANGUAGE	13
PROT	Password Enable	Disable/Enable		Enable		PASS_EBL	13
PSWD	Service Password	0000 to 9999		1111		PASSWORD	13
TEST	Test Display LEDs	Off/On		Off	(display only, not in table)	DISPTEST	13
UNIT	Unit Configuration				UNIT		
S.DLY	Startup Delay	10 to 600	sec	30		STARTDLY	13
U.CTL	Unit Control Type	2=Thermostat 3=Space Sensor		2		CTL_TYPE	13
T.CTL	Thermostat Control Type	0=Adaptive 1=1 Stage Y1 2=2 Stage Y1 3=Digital		0		STATTYPE	13
FN.SW	Fan Status Switch	0=No Switch 1=Normal Open 2=Normal Closed		0		FANSTCFG	13
FL.SW	Filter Status Switch	0=No Switch 1=Normal Open 2=Normal Closed		0		FILSTCFG	13
FS.SW	Fire Shutdown Switch	0=No Switch 1=Normal Open 2=Normal Closed		0: no FIOP 1: FIOP		SHTDNCFG	13
RM.SW	Remote Occupancy Switch	0=No Switch 1=Normal Open 2=Normal Closed		0		REMOCCFG	13
SAT.T	SAT Settling Time	10 to 900	sec	240		SAT_SET	13
RAT.S	RAT Sensor Installed	No/Yes		No		RAT_SENS	13
RH.S	RH Sensor on OAQ Input	No/Yes		No		RH_OAQ	13
RH.SW	Space Humidity Switch	0=No Switch 1=Normal Open 2=Normal Closed		0: no Humidi–MiZer FIOP 1: Humidi–MiZer FIOP		HUMSTCFG	13
TCS.C	Temp Cmp Strt Cool Factr	0 to 60	mins	0		TCSTCOOL	
TCS.H	Temp Cmp Strt Heat Factr	0 to 60	mins	0		TCSTHEAT	
I.FAN	INDOOR FAN CONFIG				FAN_CFG		
FTYP	Indoor Fan Type	0=1–SPEED 1=LEN VFD 2=ECM 3=DI VFD 4=AI VFD		0 1: SAV option		FAN_TYPE	15
NSPD	Number of Speeds	2=TWO 3=THREE 7=SEVEN		2		NUM_SPDS	15
OC.FN	Fan On When Occupied	No/Yes		Yes		OCC_FAN	16
IDF.F	Shut Down on IDF Failure	No/Yes		Yes		FATALFAN	15
FS.MX	Supply Fan Maximum Speed	80 to 100		100		SPEEDMAX	19
FS.VN	Fan Speed – Ventilation	0 to 100	%	67		FSPDVENT	
FS.AQ	Fan Speed – IAQ Override	0 to 100	%	100		FSPDAQOR	
FS.E1	Fan Speed – Free Cool Lo	0 to 100	%	67		FSPDECO1	
FS.CL	Fan Speed – Mech Cooling	60 to 100	%	67		FSPDCOOL	
FS.RH	Fan Speed – Reheat2	65 to 100	%	100		FSPDREHT	11
S.VFD	SUPPLY FAN VFD CONFIG						
N.VLT	VFD1 Nominal Motor Volts	0 to 999	volts	208: 208/230v 1ph or 3ph 460: 460v 575: 575v		VFD1NVLT	
N.AMP	VFD1 Nominal Motor Amps	0 to 999	amps	Motor Dependent		VFD1NAMP	
N.FRQ	VFD1 Nominal Motor Freq	10 to 500		60		VFD1NFRQ	
N.RPM	VFD1 Nominal Motor RPM	50 to 30000		Motor Dependent		VFD1NRPM	
N.PWR	VFD1 Nominal Motor HPwr	0 to 500		Motor Dependent		VFD1NPWR	
M.DIR	VFD1 Motor Direction	0=FORWARD 1=REVERSE		0		VFD1MDIR	
ACCL	VFD1 Acceleration Time	0 to 1800	secs	30		VFD1ACCL	
DECL	VFD1 Deceleration Time	0 to 1800	secs	30		VFD1DECL	
SW.FQ	VFD1 Switching Frequency	0 to 3		2		VFD1SWFQ	

MODE — CONFIGURATION (cont)

ITEM	EXPANSION	RANGE	UNITS	DEFAULT	CCN TABLE/ Sub–TABLE	CCN POINT	PAGE NO.
COOL	Cooling Configuration				COOL_CFG		
N.CIR	Number of Circuits	0 to 3		1 (03–07) 2 (08–28)		NUM_CIRC	17
MRT.C	Compressor Min On Time	120 to 999	sec	180		MIN_ON	17
MOT.C	Compressor Min Off Time	300 to 999	sec	300		MIN_OFF	17
RST.C	Runtime to Reset Strikes	120 to 999	sec	300		MIN_ON_S	25
C.DEC	Cool Stage Decrease Time	120 to 999	sec	300		STAGEDEC	16
C.INC	Cool Stage Increase Time	120 to 999	sec	450		STAGEINC	16
FOD.C	Fan–off Delay, Mech Cool	0 to 600	sec	60		COOL_FOD	15
ALM.N	Alert Each Strike	No/Yes		Yes		ALM_NOW	25
CA.LO	Circuit A Lockout Temp	0 to 100F	°F	40: no FIOP Low ambient 0: FIOP		OATLCMPA	17
CB.LO	Circuit B Lockout Temp	0 to 100F	°F	40: no FIOP Low ambient 0: FIOP		OATLCMPB	17
D.CMP	Diagnose Comp Safety	No/Yes		No		DIAGCOMP	25
MX.SA	Max Suction Change CirA	0 to 100	PSIG	15		MAXDSSPA	25
MX.SB	Max Suction Change CirB	0 to 100	PSIG	15		MAXDSSPB	25
SAT	Supply Air Temperature						
SA.PD	SAT Cool Demand (+) Level	0.5 to 10	^F	1		SAT_POS	
SA.ND	SAT Cool Demand (–) Level	–10 to –0.5	^F	–1		SAT_NEG	
SAT.U	Minimum SAT Upper Level	35.0 to 65.0	°F	60 (03–14) 58 (17–24) 53 (28)		SATMIN_H	16
SAT.L	Minimum SAT Lower Level	35.0 to 65.0	°F	35 (03–07) 45 (08–14) 48 (17–28)		SATMIN_L	16
SPT	Space Temperature						
CL.PD	SPT Cool Demand (+) Level	0.5 to 5	^F	1		DEM_POS	
CL.ND	SPT Cool Demand (–) Level	–5 to –0.5	^F	–1		DEM_NEG	
C.LAG	Cool Thermal Lag Factor	0 to 5		1		COOL_LAG	
SST	Low Suction Control						
SST.O	Suction OK Temperature	10 to 50	°F	18		SSTOK	26
SST.1	Low Suction – Level 1	10 to 50	°F	20		SSTLEV1	26
SST.2	Low Suction – Level 2	5 to 50	°F	15		SSTLEV2	26
SST.3	Low Suction – Level 3	0 to 50	°F	10		SSTLEV3	26
CK.DL	Delay On Low SST Check	0 to 300	sec	0		SSTCKDLY	
HMZR	Humidimizer Config				HMZR_CFG		
REHT	Humidimizer Equipped	No/Yes		No: no Humidi–MiZer FIOP Yes: Humidi–MiZer FIOP		REHEAT	22
R.DEC	Reheat2 Stage Decr. Time	0 to 999	secs	60		RSTAGDEC	
R.INC	Reheat2 Stage Incr. Time	0 to 999	secs	300		RSTAGINC	
RA.LO	Reheat2 OAT Limit A	20 to 70	°F	40		OATLRH_A	
RA.LP	Reheat2 SSP Lo Limit A	50 to 100	psig	80		RHSSPL_A	
RA.HP	Reheat2 SSP Hi Limit A	50 to 100	psig	90		RHSSPH_A	
RB.LO	Reheat2 OAT Limit B	20 to 70	°F	50		OATLRH_B	
RB.LP	Reheat2 SSP Lo Limit B	50 to 100	psig	80		RHSSPL_B	
RB.HP	Reheat2 SSP Hi Limit B	50 to 100	psig	90		RHSSPH_B	
HEAT	Heating Configuration				HEAT_CFG		
HT.TY	Type of Heat Installed	0=No Heat 1=Gas 2=Electric		0 (50 series with no electric heat) 1 (48 series) 2 (50 series with electric heat)		HEATTYPE	17
N.HTR	Number of Heat Stages	1 to 2		2 1 (48 series Low Nox, 50 series <15kW)		NUM_HEAT	18
MRT.H	Heat Minimum On Time	60 to 999	sec	120		HMIN_ON	18
MOT.H	Heat Minimum Off Time	60 to 999	sec	120		HMIN_OFF	18
H.DEC	Heat Stage Decrease Time	120 to 999	sec	300		HSTAGDEC	17
H.INC	Heat Stage Increase Time	120 to 999	sec	450		HSTAGINC	18
FOD.E	Fan–off Delay, Elect Heat	10 to 600	sec	30		ELEC_FOD	15
FOD.G	Fan–off Delay, Gas Heat	45 to 600	sec	45		GAS_FOD	15
HT.LO	Heating Lockout Temp	40 to 125	°F	75		OATLHEAT	17
SAT							
SAT.H	SAT Heat Mode Sensing	Disable/Enable		Disable		SAT_HEAT	17
SAM.L	Maximum SAT Lower Level	85 to 200	°F	140		SATMAX_L	17
SAM.U	Maximum SAT Upper Level	85 to 200	°F	160		SATMAX_H	17
SPT	Space Temperature						
HT.PD	SPT Heat Demand (+) Level	0.5 to 5	^F	1		HDEM_POS	
HT.ND	SPT Heat Demand (–) Level	–5 to –0.5	^F	–1		HDEM_NEG	
H.LAG	Heat Thermal Lag Factor	0 to 5		1		HEAT_LAG	

APPENDIX A — LOCAL DISPLAY AND CCN TABLES

MODE — CONFIGURATION (cont)

ITEM	EXPANSION	RANGE	UNITS	DEFAULT	CCN TABLE/ Sub–TABLE	CCN POINT	PAGE NO.
ECON	Economizer Configuration				ECON_CFG		
EC.EN	Economizer Installed	No/Yes		No: no FIOP Yes: FIOP		ECONO	19
E.CTL	Economizer Control Type	1=Dig/Position 2=Dig/Command 3=Analog Ctrl		1		ECON_CTL	19
MP.25	Econ Min at 25% Fanspeed	0 to 100	%	0		MINP_25	20
MP.50	Econ Min at 50% Fanspeed	0 to 100	%	0		MINP_50	20
MP.75	Econ Min at 75% Fanspeed	0 to 100	%	0		MINP_75	20
MP.MX	Econ Min at Max Fanspeed	0 to 100	%	30 0: FIOP EnergyX		MINP_MAX	20
EC.MX	Econo Cool Max Position	0 to 100	%	100		ECONOMAX	20
M.ANG	Min Actuator Ctrl Angle	75 to 90		88		MINANGLE	19
EH.LO	Econo Cool Hi Temp Limit	40 to 100	°F	65		OATLECLH	20
EL.LO	Econo Cool Lo Temp Limit	–30 to 50	°F	0		OATLECLL	20
DF.DB	Diff Dry Bulb Control	Disable/Enable		Disable		DIFFBULB	20
UEFC	Unoccupied Free Cooling	0=Disabled 1=Unoccpied 2=PreOccupancy		2		UEFC_CFG	20
FC.TM	Free Cool PreOcc Time	1 to 9999	mins	120		UEFCTIME	20
FC.LO	Free Cool Low Temp Limit	–30 to 70	°F	50		OATLUEFC	20
PE.EN	Power Exhaust Installed	No/Yes		No: no FIOP Yes: FIOP		PE_ENABL	20
PE.1	PE Stage1 Econo Position	0 to 100	%	40		PE1_POS	20
PE.2	PE Stage2 Econo Position	0 to 100	%	75		PE2_POS	20
PE1.C	Power Exhaust Stage1 CFM	0 to 15000	CFM	800 (04–07) 1600 (08–14) 3200 (17–28)		PE1_CFM	21
PE2.C	Power Exhaust Stage2 CFM	0 to 15000	CFM	0		PE2_CFM	21
IDF.C	Indoor Fan Max Speed CFM	500 to 15000	CFM	2000 (04–07) 4000 (08–14) 8000 (17–28)		IDF_CFM	21
EN.SW	Enthalpy Switch	0=No Switch 1=Normal Open 2=Normal Closed		0: no FIOP 1: FIOP		ENTHLCFG	8
E.TRV	Economizer Travel Time	5 to 300	secs	150		ECONOTRV	
E.MXB	Bottom Stage Max Econo	0 to 100	%	50		ECONMAXB	
E.MXT	Top Stage Max Econo	0 to 100	%	25 (03–14) 0 (17–28)		ECONMAXT	
AIR.Q	Air Quality Config.				IAQ_CFG		
IA.CF	IAQ Analog Input Config	0=No IAQ 1=DCV 2=Override IAQ 3=Ctrl Min Pos		0: no FIOP 1: FIOP		IAQANCFG	12
IA.FN	IAQ Analog Fan Config	0=Never 1=Occupied 2=Always		0		IAQANFAN	21
II.CF	IAQ Switch Input Config	0=No IAQ 1=DCV N/O 2=DCV N/C 3=Override N/O 4=Override N/C		0		IAQINCFG	21
II.FN	IAQ Switch Fan Config	0=Never 1=Occupied 2=Always		0		IAQINFAN	22
AQ.MN	Econo Min IAQ Position	0 to 100	%	10 0: FIOP EnergyX		IAQMINP	21
OVR.P	IAQ Override Position	0 to 100	%	100		IAQOVPOS	21
OA.CF	OAQ Analog Input Config	0=No OAQ 1=DCV 2=Lockout OAQ		0		OAQANCFG	
OAQ.L	OAQ Lockout Limit	0 to 5000		600		OAQLOCK	20
AQD.L	AQ Differential Low	0 to 5000		100		DAQ_LOW	21
AQD.H	AQ Differential High	0 to 5000		700		DAQ_HIGH	21
DF.ON	Fan On AQ Differential	0 to 5000		600		DAQFNON	22
DF.OF	Fan Off AQ Differential	0 to 5000		200		DAQFNOFF	22
I.4M	IAQ Sensor Value at 4mA	0 to 5000		0		IAQ_4MA	21
I.20M	IAQ Sensor Value at 20mA	0 to 5000		2000		IAQ_20MA	21
O.4M	OAQ Sensor Value at 4mA	0 to 5000		0		OAQ_4MA	22
O.20M	OAQ Sensor Value at 20mA	0 to 5000		2000		OAQ_20MA	22
H.4M	RH Sensor Value at 4mA	0 to 50	%	0		RH_4MA	23
H.20M	RH Sensor Value at 20mA	60 to 100	%	100		RH_20MA	23

MODE — CONFIGURATION (cont)

ITEM	EXPANSION	RANGE	UNITS	DEFAULT	CCN TABLE/ Sub–TABLE	CCN POINT	PAGE NO.
OAU	Outside Air Unit Config				OAU_CFG		
OA.TY	Outdoor Air Unit Type	0=No OAU 1=ERV Module 2=Economizer 3=Pwr Exhaust 4=OA Monitor 5=100% OA Unit 6=EXv1 ERV		0: no FIOP 1: FIOP EnergyX		OAU_TYPE	27
OA.FC	Outside Air Fan Curve	0 to 999		1: 04 2: 05–06 3: 07 4: 08–12 5: 14 6: 17–20 7: 24–28		OAFANCRV	
PE.FC	Exhaust Air Fan Curve	0 to 999		1: 04, 1ph, and econ 2: 04, 3ph, and econ 3: 04, 1ph, and no econ 4: 04, 3ph, and no econ 5: 05–06 1ph 6: 05–06 3ph 7: 07 8: 08–12 9: 14 10: 17–20 and econ 11: 17–20 and no econ 12: 24–28		PEFANCRV	
U.RUN	OAU Unoccupied Operation	No/Yes		NO		UNOCCRUN	
OAU.F	Shut Down on Fan Failure	No/Yes		Yes		FATALOAU	
M.WHL	Modulating Wheel Install	No/Yes		NO		MODWHEEL	
OA.MN	Minimum Outside Air CFM	0 to 32000	CFM	375: 04 800: 05–06 1000: 07 2500: 08–12 3000: 14 4000: 17–20 5000: 24–28		MINOACFM	
DCV.M	Min DCV Outside Air CFM	0 to 32000	CFM	100: 04 250: 05–06 600: 07 1000: 08–12 1500: 14–24 2000: 24–28		MINDCVSP	
PEX.C	Power Exhaust Control	0=Offset CFM 1=BP		0		PEX_CTL	
PE.OF	Power Exhaust CFM Offset	–17000 to 17000	CFM	–200		EXOFFSET	
BP.SP	Building Pressure Setpnt	–0.25 to 0.25	in H2O	0.05		OAU_BPSP	
OA.TM	Outside Air Tempering	Disable/Enable		Disable		OATEMPER	
TM.LO	OA Tempring Lockout Temp	0 to 80	°F	60		OATMPLOC	
TM.SP	OA Tempring SAT Setpoint	35 to 80	°F	55		OATMPSPT	
OAC.K	Outside Air CFM k Factor	0.8 to 1.2		1		OACFM_K	
EXC.K	Exhaust Air CFM k Factor	0.8 to 1.2		1		EXCFM_K	
OAFB	OAU Fan Boost Enable	No/Yes		No		EFB_ENBL	
ALM.O	Alarm Relay Config.				ALM_CFG		
A.SPC	SPT/SPRH Sensor Failure	No/Yes		Yes		SPACE_AL	
A.SRT	SAT/RAT Sensor Failure	No/Yes		Yes		SATRATAL	
A.OAT	OAT Thermistor Failure	No/Yes		Yes		OAT_AL	
A.CMP	Compressor Failure	No/Yes		Yes		COMP_AL	
A.CKT	Refrig Circuit Failure	No/Yes		Yes		CKT_AL	
A.SSP	SSP Transducer Failure	No/Yes		Yes		SSP_AL	
A.SCT	SCT Thermistor Failure	No/Yes		Yes		SCT_AL	
A.FAN	Indoor Fan Failure	No/Yes		Yes		FAN_AL	
A.FIL	Dirty Filter	No/Yes		Yes		FILT_AL	
A.TST	Thermostat Failure	No/Yes		Yes		TSTAT_AL	
A.ECO	Economizer Failure	No/Yes		Yes		ECON_AL	
A.OAU	Outside Air unit Alarms	No/Yes		Yes		OAU_AL	
PID	PID Configurations				PID_CFG		
EC.P	Economizer PID – kP	0.00 to 99.90		2.5		ECONO_P	
EC.I	Economizer PID – kI	0.00 to 99.90		0.12		ECONO_I	
EC.D	Economizer PID – kD	0.00 to 99.90		1		ECONO_D	
EC.DT	Economizer PID – rate	10.00 to 180.00	secs	15		ECONO_DT	
EC.DB	Economizer PID Deadband	0 to 25	%	3		ECONBAND	
LK.P	Linkage Staging PID – kP	0.00 to 99.90		10		LINK_P	
LK.I	Linkage Staging PID – kI	0.00 to 99.90		5		LINK_I	
LK.D	Linkage Staging PID – kD	0.00 to 99.90		5		LINK_D	
LK.DT	Linkage Staging PID – rate	10.00 to 180.00	secs	30		LINK_DT	

APPENDIX A — LOCAL DISPLAY AND CCN TABLES

MODE — CONFIGURATION (cont)

ITEM	EXPANSION	RANGE	UNITS	DEFAULT	CCN TABLE/ Sub–TABLE	CCN POINT	PAGE NO.
(GENERIC = CCN only)					GENERICS		
	POINT 01 Definition					Point_01	
	POINT 02 Definition					Point_02	
	POINT 03 Definition					Point_03	
	POINT 04 Definition					Point_04	
	POINT 05 Definition					Point_05	
	POINT 06 Definition					Point_06	
	POINT 07 Definition					Point_07	
	POINT 08 Definition					Point_08	
	POINT 09 Definition					Point_09	
	POINT 10 Definition					Point_10	
	POINT 11 Definition					Point_11	
	POINT 12 Definition					Point_12	
	POINT 13 Definition					Point_13	
	POINT 14 Definition					Point_14	
	POINT 15 Definition					Point_15	
	POINT 16 Definition					Point_16	
	POINT 17 Definition					Point_17	
	POINT 18 Definition					Point_18	
	POINT 19 Definition					Point_19	
	POINT 20 Definition					Point_20	
TRIM	Sensor Calibration				(CCN TRIM – see Maintenance Display)		
SPT.C	Space Temp Calibration	–30 to 130	°F				38
SPT.T	Space Temp Trim	–30 to 30	^F	0			38
SAT.C	Supply Air Temp Calib.	–30 to 130	°F				38
SAT.T	Supply Air Temp Trim	–30 to 30	^F	0			38
RAT.C	Return Air Temp Calib.	–30 to 130	°F				38
RAT.T	Return Air Temp Trim	–30 to 30	^F	0			38
					CCN CONFIGURATION		
CCN	CCN Configuration				48_50_HC		
CCN.A	CCN Element Number	1 to 239		1		CCNADD	23
CCN.B	CCN Bus Number	0 to 239		0		CCNBUS	23
BAUD	CCN Baud Rate	1=2400 2=4800 3=9600 4=19200 5=38400		3		CCNBAUDD	23
BROD	CCN Broadcast Config.				BRODEFS		
B.TIM	CCN Time/Date Broadcast	No/Yes		No		CCNBC	23
B.OAT	CCN OAT Broadcast	No/Yes		No		OATBC	23
B.GS	Global Schedule Broadcst	No/Yes		No		GSBC	23
B.ACK	CCN Broadcast Ack'er	No/Yes		No		CCNBCACK	23
SCH.O	CCN Schedule Overrides				SCHEDOVR		
SCH.N	Schedule Number	0 = Always Occupied 1–64 = Local Schedule 65–99 = Global Schedule		0		SCHEDNUM	23
HOL.G	Accept Global Holidays	No/Yes		No		HOLIDAYT	24
OV.TL	Override Time Limit	0 to 4	hours	4		OTL	24
OV.EX	Timed Override Hours	0 to 4	hours	0		OVR_EXT	24
OV.SP	SPT Override Enabled	No/Yes		Yes		TIMEOVER	24
LDSH	CCN LOADSHED CONFIG.				LOADSHED		24
S.GRP	Loadshed Group Number	0 to 16		0		SHED_NUM	24
R.MXC	Redline Max Cool Stages	0 to 3		2		MAXCREDL	24
S.MXC	Loadshed Max Cool Stages	0 to 3		2		MAXCSHED	
R.MXH	Redline Max Heat Stages	0 to 2		2		MAXHREDL	24
S.MXH	Loadshed Max Heat Stages	0 to 2		2		MAXHSHED	24

APPENDIX A — LOCAL DISPLAY AND CCN TABLES

MODE — TIME CLOCK

ITEM	EXPANSION	RANGE	UNITS	DEFAULT	CCN TABLE/ Sub–TABLE	CCN POINT
TIME CLOCK					CONFIGURATION	
TIME	Time of Day				TIME	
TIME	Hour and Minute	xx.xx	hh.mm			TIME
DATE	Current Date					
MNTH	Month of Year	January, February, ..., December				MOY
DOM	Day of Month	1 to 31				DOM
YEAR	Year	xxxx				YOCDISP
DAY	Day of Week	Monday, Tuesday, ..., Sunday				DOWDISP
DST	Daylight Savings Config.				BRODEFS (continued)	
STR.M	Start Month	January, February, ..., December		3		STARTM
STR.W	Start Week	1 to 5		2		STARTW
STR.D	Start Day	1 to 7		7		STARTD
M.ADD	Minutes to Add	0 to 90		60		MINADD
STP.M	Stop Month	January, February, ..., December		11		STOPM
STP.W	Stop Week	1 to 5		1		STOPW
STP.D	Stop Day	1 to 7		7		STOPD
M.SUB	Minutes to Subtract	0 to 90		60		MINSUB
SCH.L	Occupancy Schedule				(SCH.L = Display only)	
PER.x	Occupancy Period x					
OCC.x	Occupied From	00.00 to 23.59	hh.mm	00.00		PERxOCC
UNC.x	Occupied To	00.00 to 23.60	hh.mm	00.00		PERxUNC
MON.x	Monday in Period	Yes/No		No		PERxMON
TUE.x	Tuesday in Period	Yes/No		No		PERxTUE
WED.x	Wednesday in Period	Yes/No		No		PERxWED
THU.x	Thursday in Period	Yes/No		No		PERxTHU
FRI.x	Friday in Period	Yes/No		No		PERxFRI
SAT.x	Saturday in Period	Yes/No		No		PERxSAT
SUN.x	Sunday in Period	Yes/No		No		PERxSUN
HOL.x	Holiday in Period	Yes/No		No		PERxHOL
(repeat up to x=8 Periods)						
(OCCFECS = CCN only)					OCCDEFCS	
	Timed Override Hours	x	hours			OVR–EXT
	Period x DOW (MTWTFSSH)	xxxxxxxx		00000000		DOWx
	Occupied From	00.00 to 24.00	hh.mm	00.00		OCCTODx
	Occupied To	00.00 to 24.00	hh.mm	00.00		UNOCTODx
						(repeat up to x=8 Periods)
HOL.L	Holiday Schedule				HOLIDAY	
HOL.x	Holiday x				HOLDYxxS	
MON.x	Holiday Start Month	1 to 12 = January to December		0		HOLMONxx
DAY.x	Holiday Start Day	1 to 31		0		HOLDAYxx
LEN.x	Holiday Duration (days)	1 to 99		0		HOLLENxx
(repeat up to x=9 Holidays)						(repeat up to xx=30 Holidays)

CCN ONLY TABLES

ITEM	EXPANSION	RANGE	UNITS	DEFAULT	CCN TABLE/ Sub–TABLE	CCN POINT
(ALARMDEF = CCN only)					ALARMDEF	
	Alarm Routing Control	00000000 to 11111111		11000000		ALRM_CNT
	Equipment Priority	0 to 7		5		EQP_TYPE
	Comm Failure Retry Time	1 to 240	min	10		RETRY_TM
	Re–Alarm Time	1 to 255	min	180		RE–ALARM
	Alarm System Name	up to 8 alphanum		48_50_HC		ALRM_NAM
(CTLRID = CCN only)					CTLR–ID	
	Device Name:	48_50_HC				
	Description:	text string				
	Location:	text string				
	Software Part Number:	CESR131504–XX–XX				
	Model Number:					
	Serial Number:					
	Reference Number:					

APPENDIX A — LOCAL DISPLAY AND CCN TABLES

MODE — OPERATING MODES

ITEM	EXPANSION	RANGE	UNITS	CCN TABLE/ Sub–TABLE	CCN POINT	CCN WRITE STATUS	DISPLAY WRITE STATUS
OPERATING MODES				MAINTENANCE DISPLAY			
MODE	Control Modes			MODES			
SYS	Unit operation disabled Unit operation enabled Service test enabled				SYS_MODE_TEXT1 SYS_MODE_TEXT2 (table only) SYS_MODE_TEXT3 table only)		
HVAC	HVAC Operation Disabled Ventilation (fan–only) Cooling Free Cooling Unoccupied Free Cooling Reheat1 Reheat2 Reheat1 / Reheat2 Heating				HVACMODE_TEXT_1 HVACMODE_TEXT_2 (table only) HVACMODE_TEXT_3 (table only)		
F.MOD	Indoor Fan Mode	x			IDF_MODE		
F.OVR	Fan Override in Effect	No/Yes			FAN_OVR		
HV.DN	Remote HVAC Mode Disable	No/Yes			HVACDOWN	forcible	
EFF.C	Cool Setpoint In Effect	xx.x	°F		CSP_EFF		
EFF.H	Heat Setpoint In Effect	xx.x	°F		HSP_EFF		
OCC	Currently Occupied	No/Yes			OCCUPIED	forcible	forcible
T.OVR	Timed Override in Effect	No/Yes			MODETOVR		
LINK	Linkage Active	No/Yes			MODELINK		
D.LMT	Demand Limit In Effect	No/Yes			MODEDMDL		
C.LOC	Compressor OAT Lockout	No/Yes			COMPLOCK		
H.LOC	Heat OAT Lockout	No/Yes			HEATLOCK		
OK.EC	OK to Use Economizer?	No/Yes			ECONCOOL		
COOL	Cool Mode Diagnostic			COOLDIAG			
COOL	In Cooling Mode?	No/Yes			IN_COOL		
OK.CL	OK to Select Cool Mode?	No/Yes			OKTOCOOL		
MS.TG	Mode Select Timeguard	xxx	secs		COOLMSTG		
OK.EC	OK to Use Economizer?	No/Yes			ECONCOOL		
OK.MC	OK to Use Compressors?	No/Yes			MECHCOOL		
C.LOC	Compressor OAT Lockout	No/Yes			COMPLOCK		
CA.LO	Circuit A Lockout Temp	xxx	°F		OATLCMPA		
CB.LO	Circuit B Lockout Temp	xxx	°F		OATLCMPB		
F.MOD	Indoor Fan Mode	x			IDF_MODE		
F.SPD	Commanded Fan Speed	NNN	%		FANSPEED		
AVL.C	Available Cooling Stages	x			AVLCSTGS		
REQ.C	Requested Cooling Stages	x			REQCSTGS		
LMT.C	Max Cool Stage In Effect	x			CSTGLIMT		
ACT.C	Actual Cooling Stages	x			ACTCSTGS		
CMP.A	Circuit A Compressor(s)	Off/On			COMP_A		
CMP.B	Circuit B Compressor	Off/On			COMP_B		
ST.A	Circuit A Strikes	x			ASTRIKES		
ST.B	Circuit B Strikes	x			BSTRIKES		
HPS.A	Ckt A Hi Pres Sq Check	No/Yes			INHPSCKA		
HPS.B	Ckt B Hi Pres Sq Check	No/Yes			INHPSCKB		
SAT	Supply Air Temperature						
SAT	Supply Air Temperature	xxx.x	°F		SAT_DISP		
SA.DM	Supply Air Temp Demand	xxx.x	^F		SAT_DMD		
SA.PD	SAT Cool Demand (+) Level	xx.x	^F		SAT_POS		
SA.ND	SAT Cool Demand (–) Level	xx.x	^F		SAT_NEG		
SAT.U	Minimum SAT Upper Level	xx.x	°F		SATMIN_H		
SAT.L	Minimum SAT Lower Level	xx.x	°F		SATMIN_L		
SA.TR	Supply Air d/dt (F/min)	xxxx.x			SATTREND		
SA.DR	SAT Delta Reference Temp	xxx.x	°F		SAT_REF		
SPT	Space Temperature						
SPT	Space Temperature	xxx.x	°F		SPACE_T	forcible	forcible
DMD.C	Cooling Demand	xxx.x	^F		COOL_DMD		
TRD.C	Cool Demand d/dt (F/min)	xxx.x			CLDTREND		
CL.PD	SPT Cool Demand (+) Level	xx.x	^F		DEM_POS		
CL.ND	SPT Cool Demand (–) Level	xx.x	^F		DEM_NEG		
C.LAG	Cool Thermal Lag Factor	x.x			COOL_LAG	COOL_LAG	
HMZR	Humidimizer						
REHT	Humidimizer Equipped	No/Yes			REHEAT		
HUM	Space Humidity Switch	Low/High			HUM_STAT	forcible	
SP.RH	Space Humidity Sensor	xxx.x	%		SPRH	forcible	forcible
R.LO.A	Reheat2 OAT Lockout A	No/Yes			RHALOCK		
RA.LO	Reheat2 OAT Limit A	xx	°F		OATLRH_A		
R.LP.A	Reheat2 SSP Override A	No/Yes			RHALPOV		
R.LO.B	Reheat2 OAT Lockout B	No/Yes			RHBLOCK		
RB.LO	Reheat2 OAT Limit B	xx	°F		OATLRH_B		

MODE — OPERATING MODES (cont)

ITEM	EXPANSION	RANGE	UNITS	CCN TABLE/ Sub–TABLE	CCN POINT	CCN WRITE STATUS	DISPLAY WRITE STATUS
COOL (cont)	Cool Mode Diagnostic			COOLDIAG			
R.LP.B	Reheat2 SSP Override B	No/Yes			RHBLPOV		
AVL.R	Available Reheat2 Stages	x			AVLRSTGS		
REQ.R	Requested Reheat2 Stages	x			REQRSTGS		
ACT.R	Actual Reheat2 Stages	x			ACTRSTGS		
CRC	Cool–>Reheat1 Control	Off/On			CRC		
RH2.A	Reheat2 Valve A	Off/On			RH2_A		
RH2.B	Reheat2 Valve B	Off/On			RH2_B		
HEAT	Heat Mode Diagnostic			HEATDIAG			
HEAT	In Heating Mode?	No/Yes			IN_HEAT		
OK.HT	OK to Select Heat Mode?	No/Yes			OKTOHEAT		
MS.TG	Mode Select Timeguard	xxx	secs		HEATMSTG		
H.LOC	Heat OAT Lockout	No/Yes			HEATLOCK		
HT.LO	Heating Lockout Temp	xxx	°F		OATLHEAT		
IGC.F	IGC Fan Request	Off/On			IDF_FDBK		
F.MOD	Indoor Fan Mode	x			IDF_MODE		
F.SPD	Commanded Fan Speed	xxx	%		FANSPEED		
AVL.H	Available Heating Stages	x			AVLHSTGS		
REQ.H	Requested Heating Stages	x			REQHSTGS		
LMT.H	Max Heat Stage In Effect	x			HSTGLIMT		
ACT.H	Actual Heating Stages	x			ACTHSTGS		
HT.1	Heat Stage 1 Relay	Off/On			HEAT_1		
HT.2	Heat Stage 2 Relay	Off/On			HEAT_2		
SAT	Supply Air Temperature						
SAT.H	SAT Heat Mode Sensing	Disable/Enable			SAT_HEAT		
SAT	Supply Air Temperature	xxx.x	°F		SAT_DISP		
SAM.L	Maximum SAT Lower Level	xxx.x	°F		SATMAX_L		
SAM.U	Maximum SAT Upper Level	xxx.x	°F		SATMAX_H		
SPT	Space Temperature						
SPT	Space Temperature	xxx.x	°F		SPACE_T	forcible	forcible
DMD.H	Heating Demand	xxx.x	^F		HEAT_DMD		
TRD.H	Heat Demand d/dt (F/min)	xxx.x			HTDTREND		
HT.PD	SPT Heat Demand (+) Level	xx.x	^F		HDEM_POS		
HT.ND	SPT Heat Demand (–) Level	xx.x	^F		HDEM_NEG		
H.LAG	Heat Thermal Lag Factor	x.x			HEAT_LAG		
ECON	Economizer Diagnostic			ECONDIAG			
EC.EN	Economizer Installed	No/Yes			ECONO		
OK.EC	OK to Use Economizer?	No/Yes			ECONCOOL		
OCC	Currently Occupied	No/Yes			OCCUPIED	forcible	forcible
F.MOD	Indoor Fan Mode	x			IDF_MODE		
F.SPD	Commanded Fan Speed	xxx	%		FANSPEED		
COOL	In Cooling Mode?	No/Yes			IN_COOL		
OAT	Outdoor Air Temperature	xxx.x	°F		OA_TEMP	forcible	forcible
RAT	Return Air Temperature	xxx.x	°F		RETURN_T	forcible	
E.LOC	Econo Cool OAT Lockout	No/Yes			ECONLOCK		
D.LOC	Econo Diff Dbulb Lockout	No/Yes			DFDBLOCK		
EH.LO	Econo Cool Hi Temp Limit	xxx	°F		OATLECLH		
EL.LO	Econo Cool Lo Temp Limit	xxx	°F		OATLECLL		
FC.LO	Free Cool Low Temp Limit	xxx	°F		OATLUEFC		
EN.LO	Econo Cool Enth Lockout	No/Yes			ENTHLOCK		
EC.MX	Econo Cool Max Position	xxx	%		ECONOMAX		
AQ.DV	IAQ DCV Mode	No/Yes			IN_IAQDV		
AQ.MN	Econo Min IAQ Position	xxx	%		IAQMINP		
AQ.OV	IAQ Override Mode	No/Yes			IN_IAQOV		
OVR.P	IAQ Override Position	xxx	%		IAQOVPOS		
AQ.LO	OAQ Lockout Mode	No/Yes			IN_OAQLO		
OAQ.L	OAQ Lockout Limit	xxxx			OAQLOCK		
LP.OV	Lo Refrig Press Override	No/Yes			IN_LPOV		
EC.CP	Econo Commanded Position	xxx	%		ECONOCMD	forcible	forcible
EC.AP	Econo Actual Position	xxx	%		ECONOPOS		
EC.MP	Min Position in Effect	xxx	%		MIN_POS	forcible	forcible
C.ANG	Actuator Control Angle	xx.x			CTLANGLE		
E.CAL	Economizer Calibrating	No/Yes			ECOINCAL		

APPENDIX A — LOCAL DISPLAY AND CCN TABLES

MODE — OPERATING MODES (cont)

ITEM	EXPANSION	RANGE	UNITS	CCN TABLE/ Sub–TABLE	CCN POINT	CCN WRITE STATUS	DISPLAY WRITE STATUS
OAU	Outside Air Unit Diagnostic			OAU_DIAG			
OA.RN	OAU System Run State	1=AUTO 2=OFF 3=TEST			OAU_RUN		
OA.OP	OAU Operating Mode	0=Off 1=ERV (DCV) 2=Free Cooling 3=OA Tempering 4=Defrost 5=Test 6=Ext. Mode 1 7=Ext. Mode 2 8=Ext. Mode 3			OAU_MODE		
2P.DM	OAU 2–position Damper	Close/Open			OAUDMPR		
WHL	OAU Wheel Speed	xxx	%		OAUWHEEL		
LAT	OAU Leaving Air Temp	xxx.x	°F		OAU_LAT		
EXAT	OAU Exhaust Air Temp	xxx.x	°F		OAU_EXAT		
OA.MN	Minimum Outside Air CFM	xxxxx	CFM		MINOACFM		
DCV.M	Min DCV Outside Air CFM	xxxxx	CFM		MINDCVSP		
OA.FS	OAU OA Fan Speed	xxx	%		OAFANSPD		
A.OA	Actual Outside Air CFM	xxxxx	CFM		ACTOACFM		
C.OA	Command Outside Air CFM	xxxxx	CFM		CMDOACFM		
PE.OF	Power Exhaust CFM Offset	xxxxx	CFM		EXOFFSET		
EX.FS	OAU Exhaust Fan Speed	xxx	%		OAUPESPD		
A.EX	Actual Exhaust Air CFM	xxxxx	CFM		ACTEXCFM		
C.EX	Command Exhaust Air CFM	xxxxx	CFM		CMDEXCFM		
BP.SP	Building Pressure Setpnt	x.xx	in H2O		OAU_BPSP		
BP	Building Pressure	x.xx	in H2O		OAU_BP		
TM.LO	OA Tempring Lockout Temp	xx	°F		OATMPLOC		
TM.SP	OA Tempring SAT Setpoint	xx	°F		OATMPSPT		
OA.HT	OAU Tempering Heater	xxx	%		OAHEATER		
ALM.1	OAU Motor Failure Alarm	Off/On			OAUALRM1		
ALM.2	OAU Dirty Filter Alarm	Off/On			OAUALRM2		
ALM.3	OA Low CFM Alarm	Off/On			OAUALRM3		
ALM.4	OAU Alarm	Off/On			OAUALRM4		
DMD.L	DEMAND LIMITING			DMDL			
D.LMT	Demand Limit In Effect	No/Yes			MODEDMDL		
LMT.C	Max Cool Stage In Effect	x			CSTGLIMT		
LMT.H	Max Heat Stage In Effect	x			HSTGLIMT		
REDL	Redline Activated	No/Yes			MODEREDL		
SHED	Loadshed Activated	No/Yes			MODESHED		
MAX.C	Max Allowed Cool Stages	x			MAXCSTGS		
MAX.H	Max Allowed Heat Stages	x			MAXHSTGS		
(Display TRIM – see Configuration)	Sensor Calibration			TRIM			
	Space Temp Calibration	–30 to 130	°F		SPT_CAL	forcible	
	Space Temp Trim	–30 to 30	^F		SPT_OFF	forcible	
	Supply Air Temp Calib.	–30 to 130	°F		SAT_CAL	forcible	
	Supply Air Temp Trim	–30 to 30	^F		SAT_OFF	forcible	
	Return Air Temp Calib.	–30 to 130	°F		RAT_CAL	forcible	
	Return Air Temp Trim	–30 to 30	^F		RAT_OFF	forcible	

MODE — OPERATING MODES (cont)

ITEM	EXPANSION	RANGE	UNITS	CCN TABLE/ Sub–TABLE	CCN POINT	CCN WRITE STATUS	DISPLAY WRITE STATUS
(LINKDATA = CCN only)	CCN – Linkage			LINKDATA			
	Supervisory Element #	xxx			SUPE–ADR		
	Supervisory Bus	xxx			SUPE–BUS		
	Supervisory Block Number	xxx			BLOCKNUM		
	Average Occup. Heat Stp.	xxxx.x	°F		AOHS		
	Average Occup. Cool Stp.	xxxx.x	°F		AOCS		
	Average Unocc. Heat Stp.	xxxx.x	°F		AUHS		
	Average Unocc. Cool Stp.	xxxx.x	°F		AUCS		
	Average Zone Temperature	xxxx.x	°F		AZT		
	Average Occup. Zone Temp	xxxx.x	°F		AOZT		
	Linkage System Occupied?	No/Yes			LOCC		
	Next Occupied Day	”Mon”, ”Tue”, ... , ”Sun”	3–char text		LNEXTOCD		
	Next Occupied Time	xx:xx	hh:mm		LNEXTOCC	forcible	
	Next Unoccupied Day	”Mon”, ”Tue”, ... , ”Sun”	3–char text		LNEXTUOD		
	Next Unoccupied Time	xx:xx	hh:mm		LNEXTUNC	forcible	
	Last Unoccupied Day	”Mon”, ”Tue”, ... , ”Sun”	3–char text		LLASTUOD		
	Last Unoccupied Time	xx:xx	hh:mm		LLASTUNC	forcible	
(OCCDEFM = CCN only)	Occupancy Supervisory			OCCDEFM			
	Current Mode (1=Occup)	0,1			MODE		
	Current Occup Period #	0 to 8			PER_NO		
	Time–Override in Effect	No/Yes			OVERLAST		
	Time–Override Duration	0 to 4	hours		OVR_HRS		
	Current Occupied Tiime	xx.xx	hh:mm		STRTTIME		
	Current Unoccupied Time	xx.xx	hh:mm		ENDTIME		
	Next Occupied Day				NXTOCDAY		
	Next Occupied Time	xx.xx	hh:mm		NXTOCTIM		
	Next Unoccupied Day				NXTUNDAY		
	Next Unoccupied Time	xx.xx	hh:mm		NXTUNTIM		
	Previous Unoccupied Day				PRVUNDAY		
	Previous Unoccupied Time	xx.xx	hh.mm		PRVUNTIM		

MODE — ALARMS

ITEM	EXPANSION	RANGE	DEFAULT	CCN TABLE/ Sub–TABLE	CCN POINT	CCN WRITE STATUS	DISPLAY WRITE STATUS
ALARMS				MAINTENANCE DISPLAY ALARMS			
R.CUR	Reset All Current Alarms	Yes/No	No		ALRESET	forcible	forcible
R.HIS	Reset Alarm History	Yes/No	No		ALHISCLR	forcible	forcible
CURR	Currently Active Alarms						
alarm#	text string				ALARM01C – ALARM25C		
repeat up to 25 alarms)							
HIST	Alarm History			ALARM HISTORY			
alarm#	alarm#–mm/dd/yy–hh.mm–text string						
(repeat up to 20 Alarms)							

APPENDIX B — CONTROL MODES WITH Humidi-MiZer™ SYSTEM AND ECONOMIZER

NOTE: Although the ComfortLink software (v1.x) and this document reference the Humidi-MiZer™, the factory installed Humidi-MiZer option is not available for EnergyX equipped 48/50HC 17-28 units as of this time.

Thermostat input shown for cooling demand (versus temperature sensor and set point). Humidistat input shown for dehumidification demand (versus relative humidity sensor and set point). Economizer cooling availability is dependent on outdoor temperature or enthalpy.

Circuit Subcooling mode = REHEAT 1

Circuit HGRH mode = hot gas reheat = REHEAT 2

Circuit ON mode = normal cooling

Thermostat Control type configuration = 0 = Adaptive, or Unit Control Type configuration = 3 = Space Temperature, for Dual-circuit and Tri-Circuit units results in added staging timers and flex between 1-stage Y1 and 2-stage Y1.

SINGLE-CIRCUIT UNITS
(Thermostat Control Type configuration is ignored)

ECONO AVAILABLE?	Y1	Y2	HUMIDISTAT	CIRCUIT A	ECONOMIZER	
NO	OFF	OFF	LOW	OFF	Min. Position	(Econo closed if fan off)
NO	OFF	OFF	HIGH	HGRH	Min. Position	
NO	ON	OFF	HIGH	Subcooling	Min. Position	
NO	OFF	ON	HIGH	Subcooling	Min. Position	alarm T411: Y2 without Y1
NO	ON	ON	HIGH	Subcooling	Min. Position	no alarm
NO	ON	OFF	LOW	ON	Min. Position	
NO	OFF	ON	LOW	ON	Min. Position	alarm T411: Y2 without Y1
NO	ON	ON	LOW	ON	Min. Position	no alarm
YES	OFF	OFF	LOW	OFF	Min. Position	(Econo closed if fan off)
YES	OFF	OFF	HIGH	HGRH	Min. Position	
YES	ON	OFF	HIGH	Subcooling	Min. Position	
YES	OFF	ON	HIGH	Subcooling	Min. Position	alarm T411: Y2 without Y1
YES	ON	ON	HIGH	Subcooling	Min. Position	no alarm
YES	ON	OFF	LOW	OFF or ON	Cooling	
YES	OFF	ON	LOW	OFF or ON	Cooling	alarm T411: Y2 without Y1
YES	ON	ON	LOW	OFF or ON	Cooling	no alarm

DUAL CIRCUIT UNITS
1-Stage Y1 (Thermostat Control Type configuration = 1)
and 2-Stage Y1 (Thermostat Control Type configuration = 2)

ECONO AVAILABLE?	Y1	Y2	HUMIDISTAT	CIRCUIT A	CIRCUIT B	ECONOMIZER	
NO	OFF	OFF	LOW	OFF	OFF	Min. Position	(Econo closed if fan off)
NO	OFF	OFF	HIGH	HGRH	HGRH	Min. Position	
NO	ON	OFF	HIGH	Subcooling	HGRH	Min. Position	
NO	OFF	ON	HIGH	Subcooling	Subcooling	Min. Position	alarm T411: Y2 without Y1
NO	ON	ON	HIGH	Subcooling	Subcooling	Min. Position	
NO	ON	OFF	LOW	ON	OFF	Min. Position	
NO	OFF	ON	LOW	ON	ON	Min. Position	alarm T411: Y2 without Y1
NO	ON	ON	LOW	ON	ON	Min. Position	
YES	OFF	OFF	LOW	OFF	OFF	Min. Position	(Econo closed if fan off)
YES	OFF	OFF	HIGH	HGRH	HGRH	Min. Position	
YES	ON	OFF	HIGH	Subcooling	HGRH	Min. Position	
YES	OFF	ON	HIGH	Subcooling	Subcooling	Min. Position	alarm T411: Y2 without Y1
YES	ON	ON	HIGH	Subcooling	Subcooling	Min. Position	
YES	ON	OFF	LOW	OFF or ON	OFF	Cooling	
YES	OFF	ON	LOW	OFF or ON	OFF or ON	Cooling	alarm T411: Y2 without Y1
YES	ON	ON	LOW	OFF or ON	OFF or ON	Cooling	

DUAL-CIRCUIT UNITS
Digital (Thermostat Control Type configuration = 3)

ECONO AVAILABLE?	Y1	Y2	HUMIDISTAT	CIRCUIT A	CIRCUIT B	ECONOMIZER	
NO	OFF	OFF	LOW	OFF	OFF	Min. Position	(Econo closed if fan off)
NO	OFF	OFF	HIGH	HGRH	OFF	Min. Position	
NO	ON	OFF	HIGH	HGRH	HGRH	Min. Position	
NO	OFF	ON	HIGH	Subcooling	HGRH	Min. Position	
NO	ON	ON	HIGH	Subcooling	Subcooling	Min. Position	
NO	ON	OFF	LOW	ON	OFF	Min. Position	
NO	OFF	ON	LOW	ON	ON	Min. Position	
NO	ON	ON	LOW	ON	ON	Min. Position	
YES	OFF	OFF	LOW	OFF	OFF	Min. Position	(Econo closed if fan off)
YES	OFF	OFF	HIGH	HGRH	OFF	Min. Position	
YES	ON	OFF	HIGH	HGRH	HGRH	Min. Position	
YES	OFF	ON	HIGH	Subcooling	HGRH	Min. Position	
YES	ON	ON	HIGH	Subcooling	Subcooling	Min. Position	
YES	ON	OFF	LOW	OFF or ON	OFF	Cooling	
YES	OFF	ON	LOW	OFF or ON	OFF or ON	Cooling	
YES	ON	ON	LOW	OFF or ON	OFF or ON	Cooling	

CONTROL SET POINT AND CONFIGURATION LOG

MODEL NO.: _____

SERIAL NO.: _____

DATE: _____

TECHNICIAN: _____

SOFTWARE VERSIONS

MBB: CESR131504--_ _

ECB: CESR131249--_ _

MARQ: CESR131171--_ _

INDICATE UNIT SETTINGS BELOW

CONTROL TYPE: Thermostat/T55 Space Temp./T-56 Space Temp./T-58 Space Temp.

SET POINT Cooling Occupied: _____ Unoccupied: _____

Heating Occupied: _____ Unoccupied: _____

MODE — CONFIGURATION

ITEM	EXPANSION	RANGE	UNITS	DEFAULT	CCN TABLE/ Sub–TABLE	CCN POINT	ENTRY
CONFIGURATION					SERVICE CONFIGURATION		
DISP	Display Configuration				DISPLAY		
METR	Metric Display	Off/On		Off		DISPUNIT	
LANG	Language Selection	0=English 1=Spanish 2=French 3=Portuguese		0		LANGUAGE	
PROT	Password Enable	Disable/Enable		Enable		PASS_EBL	
PSWD	Service Password	0000 to 9999		1111		PASSWORD	
TEST	Test Display LEDs	Off/On		Off	(display only, not in table)	DISPTEST	
UNIT	Unit Configuration				UNIT		
S.DLY	Startup Delay	10 to 600	sec	30		STARTDLY	
U.CTL	Unit Control Type	2=Thermostat 3=Space Sensor		2		CTL_TYPE	
T.CTL	Thermostat Control Type	0=Adaptive 1=1 Stage Y1 2=2 Stage Y1 3=Digital		0		STATTYPE	
FN.SW	Fan Status Switch	0=No Switch 1=Normal Open 2=Normal Closed		0		FANSTCFG	
FL.SW	Filter Status Switch	0=No Switch 1=Normal Open 2=Normal Closed		0		FILSTCFG	
FS.SW	Fire Shutdown Switch	0=No Switch 1=Normal Open 2=Normal Closed		0: no FIOP 1: FIOP		SHTDNCFG	
RM.SW	Remote Occupancy Switch	0=No Switch 1=Normal Open 2=Normal Closed		0		REMOCCFG	
SAT.T	SAT Settling Time	10 to 900	sec	240		SAT_SET	
RAT.S	RAT Sensor Installed	No/Yes		No		RAT_SENS	
RH.S	RH Sensor on OAQ Input	No/Yes		No		RH_OAQ	
RH.SW	Space Humidity Switch	0=No Switch 1=Normal Open 2=Normal Closed		0: no Humidi–MiZer FIOP 1: Humidi–MiZer FIOP		HUMSTCFG	
TCS.C	Temp Cmp Strt Cool Factr	0 to 60	mins	0		TCSTCOOL	
TCS.H	Temp Cmp Strt Heat Factr	0 to 60	mins	0		TCSTHEAT	

MODE — CONFIGURATION (cont)

ITEM	EXPANSION	RANGE	UNITS	DEFAULT	CCN TABLE/ Sub–TABLE	CCN POINT	ENTRY
I.FAN	INDOOR FAN CONFIG				FAN_CFG		
FTYP	Indoor Fan Type	0=1–SPEED 1=LEN VFD 2=ECM 3=DI VFD 4=AI VFD		0 1: SAV option		FAN_TYPE	
NSPD	Number of Speeds	2=TWO 3=THREE 7=SEVEN		2		NUM_SPDS	
OC.FN	Fan On When Occupied	No/Yes		Yes		OCC_FAN	
IDF.F	Shut Down on IDF Failure	No/Yes		Yes		FATALFAN	
FS.MX	Supply Fan Maximum Speed	80 to 100		100		SPEEDMAX	
FS.VN	Fan Speed – Ventilation	0 to 100	%	67		FSPDVENT	
FS.AQ	Fan Speed – IAQ Override	0 to 100	%	100		FSPDAQOR	
FS.E1	Fan Speed – Free Cool Lo	0 to 100	%	67		FSPDECO1	
FS.CL	Fan Speed – Mech Cooling	60 to 100	%	67		FSPDCOOL	
FS.RH	Fan Speed – Reheat2	65 to 100	%	100		FSPDREHT	
S.VFD	SUPPLY FAN VFD CONFIG						
N.VLT	VFD1 Nominal Motor Volts	0 to 999	volts	208: 208/230v 1ph or 3ph 460: 460v 575: 575v		VFD1NVLT	
N.AMP	VFD1 Nominal Motor Amps	0 to 999	amps	Motor Dependent		VFD1NAMP	
N.FRQ	VFD1 Nominal Motor Freq	10 to 500		60		VFD1NFRQ	
N.RPM	VFD1 Nominal Motor RPM	50 to 30000		Motor Dependent		VFD1NRPM	
N.PWR	VFD1 Nominal Motor HPwr	0 to 500		Motor Dependent		VFD1NPWR	
M.DIR	VFD1 Motor Direction	0=FORWARD 1=REVERSE		0		VFD1MDIR	
ACCL	VFD1 Acceleration Time	0 to 1800	secs	30		VFD1ACCL	
DECL	VFD1 Deceleration Time	0 to 1800	secs	30		VFD1DECL	
SW.FQ	VFD1 Switching Frequency	0 to 3		2		VFD1SWFQ	
COOL	Cooling Configuration				COOL_CFG		
N.CIR	Number of Circuits	0 to 3		1 (03–07) 2 (08–28)		NUM_CIRC	
MRT.C	Compressor Min On Time	120 to 999	sec	180		MIN_ON	
MOT.C	Compressor Min Off Time	300 to 999	sec	300		MIN_OFF	
RST.C	Runtime to Reset Strikes	120 to 999	sec	300		MIN_ON_S	
C.DEC	Cool Stage Decrease Time	120 to 999	sec	300		STAGEDEC	
C.INC	Cool Stage Increase Time	120 to 999	sec	450		STAGEINC	
FOD.C	Fan–off Delay, Mech Cool	0 to 600	sec	60		COOL_FOD	
ALM.N	Alert Each Strike	No/Yes		Yes		ALM_NOW	
CA.LO	Circuit A Lockout Temp	0 to 100F	°F	40: no FIOP Low ambient 0: FIOP		OATLCMPA	
CB.LO	Circuit B Lockout Temp	0 to 100F	°F	40: no FIOP Low ambient 0: FIOP		OATLCMPB	
D.CMP	Diagnose Comp Safety	No/Yes		No		DIAGCOMP	
MX.SA	Max Suction Change CirA	0 to 100	PSIG	15		MAXDSSPA	
MX.SB	Max Suction Change CirB	0 to 100	PSIG	15		MAXDSSPB	
SAT	Supply Air Temperature						
SA.PD	SAT Cool Demand (+) Level	0.5 to 10	^F	1		SAT_POS	
SA.ND	SAT Cool Demand (–) Level	–10 to –0.5	^F	–1		SAT_NEG	
SAT.U	Minimum SAT Upper Level	35.0 to 65.0	°F	60 (03–14) 58 (17–24) 53 (28)		SATMIN_H	
SAT.L	Minimum SAT Lower Level	35.0 to 65.0	°F	35 (03–07) 45 (08–14) 48 (17–28)		SATMIN_L	
SPT	Space Temperature						
CL.PD	SPT Cool Demand (+) Level	0.5 to 5	^F	1		DEM_POS	
CL.ND	SPT Cool Demand (–) Level	–5 to –0.5	^F	–1		DEM_NEG	
C.LAG	Cool Thermal Lag Factor	0 to 5		1		COOL_LAG	
SST	Low Suction Control						
SST.O	Suction OK Temperature	10 to 50	°F	18		SSTOK	
SST.1	Low Suction – Level 1	10 to 50	°F	20		SSTLEV1	
SST.2	Low Suction – Level 2	5 to 50	°F	15		SSTLEV2	
SST.3	Low Suction – Level 3	0 to 50	°F	10		SSTLEV3	
CK.DL	Delay On Low SST Check	0 to 300	sec	0		SSTCKDLY	

ITEM	EXPANSION	RANGE	UNITS	DEFAULT	CCN TABLE/ Sub–TABLE	CCN POINT	ENTRY
HMZR	Humidimizer Config				HMZR_CFG		
REHT	Humidimizer Equipped	No/Yes		No: no Humidi–MiZer FIOP Yes: Humidi–MiZer FIOP		REHEAT	
R.DEC	Reheat2 Stage Decr. Time	0 to 999	secs	60		RSTAGDEC	
R.INC	Reheat2 Stage Incr. Time	0 to 999	secs	300		RSTAGINC	
RA.LO	Reheat2 OAT Limit A	20 to 70	°F	40		OATLRH_A	
RA.LP	Reheat2 SSP Lo Limit A	50 to 100	psig	80		RHSSPL_A	
RA.HP	Reheat2 SSP Hi Limit A	50 to 100	psig	90		RHSSPH_A	
RB.LO	Reheat2 OAT Limit B	20 to 70	°F	50		OATLRH_B	
RB.LP	Reheat2 SSP Lo Limit B	50 to 100	psig	80		RHSSPL_B	
RB.HP	Reheat2 SSP Hi Limit B	50 to 100	psig	90		RHSSPH_B	
HEAT	Heating Configuration				HEAT_CFG		
HT.TY	Type of Heat Installed	0=No Heat 1=Gas 2=Electric		0 (50 series with no electric heat) 1 (48 series) 2 (50 series with electric heat)		HEATTYPE	
N.HTR	Number of Heat Stages	1 to 2		2 1 (48 series Low Nox, 50 series <15kW)		NUM_HEAT	
MRT.H	Heat Minimum On Time	60 to 999	sec	120		HMIN_ON	
MOT.H	Heat Minimum Off Time	60 to 999	sec	120		HMIN_OFF	
H.DEC	Heat Stage Decrease Time	120 to 999	sec	300		HSTAGDEC	
H.INC	Heat Stage Increase Time	120 to 999	sec	450		HSTAGINC	
FOD.E	Fan–off Delay, Elect Heat	10 to 600	sec	30		ELEC_FOD	
FOD.G	Fan–off Delay, Gas Heat	45 to 600	sec	45		GAS_FOD	
HT.LO	Heating Lockout Temp	40 to 125	°F	75		OATLHEAT	
SAT							
SAT.H	SAT Heat Mode Sensing	Disable/Enable		Disable		SAT_HEAT	
SAM.L	Maximum SAT Lower Level	85 to 200	°F	140		SATMAX_L	
SAM.U	Maximum SAT Upper Level	85 to 200	°F	160		SATMAX_H	
SPT	Space Temperature						
HT.PD	SPT Heat Demand (+) Level	0.5 to 5	^F	1		HDEM_POS	
HT.ND	SPT Heat Demand (–) Level	–5 to –0.5	^F	–1		HDEM_NEG	
H.LAG	Heat Thermal Lag Factor	0 to 5		1		HEAT_LAG	
ECON	Economizer Configuration				ECON_CFG		
EC.EN	Economizer Installed	No/Yes		No: no FIOP Yes: FIOP		ECONO	
E.CTL	Economizer Control Type	1=Dig/Position 2=Dig/Command 3=Analog Ctrl		1		ECON_CTL	
MP.25	Econ Min at 25% Fanspeed	0 to 100	%	0		MINP_25	
MP.50	Econ Min at 50% Fanspeed	0 to 100	%	0		MINP_50	
MP.75	Econ Min at 75% Fanspeed	0 to 100	%	0		MINP_75	
MP.MX	Econ Min at Max Fanspeed	0 to 100	%	30 0: FIOP EnergyX		MINP_MAX	
EC.MX	Econo Cool Max Position	0 to 100	%	100		ECONOMAX	
M.ANG	Min Actuator Ctrl Angle	75 to 90		88		MINANGLE	
EH.LO	Econo Cool Hi Temp Limit	40 to 100	°F	65		OATLECLH	
EL.LO	Econo Cool Lo Temp Limit	–30 to 50	°F	0		OATLECLL	
DF.DB	Diff Dry Bulb Control	Disable/Enable		Disable		DIFFBULB	
UEFC	Unoccupied Free Cooling	0=Disabled 1=Unoccpied 2=PreOccupancy		2		UEFC_CFG	
FC.TM	Free Cool PreOcc Time	1 to 9999	mins	120		UEFCTIME	
FC.LO	Free Cool Low Temp Limit	–30 to 70	°F	50		OATLUEFC	
PE.EN	Power Exhaust Installed	No/Yes		No: no FIOP Yes: FIOP		PE_ENABL	
PE.1	PE Stage1 Econo Position	0 to 100	%	40		PE1_POS	
PE.2	PE Stage2 Econo Position	0 to 100	%	75		PE2_POS	
PE1C	Power Exhaust Stage1 CFM	0 to 15000	CFM	800 (04–07) 1600 (08–14) 3200 (17–28)		PE1_CFM	
PE2C	Power Exhaust Stage2 CFM	0 to 15000	CFM	0		PE2_CFM	
IDF.C	Indoor Fan Max Speed CFM	500 to 15000	CFM	2000 (04–07) 4000 (08–14) 8000 (17–28)		IDF_CFM	
EN.SW	Enthalpy Switch	0=No Switch 1=Normal Open 2=Normal Closed		0: no FIOP 1: FIOP		ENTHLCFG	
E.TRV	Economizer Travel Time	5 to 300	secs	150		ECONOTRV	
E.MXB	Bottom Stage Max Econo	0 to 100	%	50		ECONMAXB	
E.MXT	Top Stage Max Econo	0 to 100	%	25 (03–14) 0 (17–28)		ECONMAXT	

ITEM	EXPANSION	RANGE	UNITS	DEFAULT	CCN TABLE/ Sub–TABLE	CCN POINT	ENTRY
AIR.Q	Air Quality Config.				IAQ_CFG		
IA.CF	IAQ Analog Input Config	0=No IAQ 1=DCV 2=Override IAQ 3=Ctrl Min Pos		0: no FIOP 1: FIOP		IAQANCFG	
IA.FN	IAQ Analog Fan Config	0=Never 1=Occupied 2=Always		0		IAQANFAN	
II.CF	IAQ Switch Input Config	0=No IAQ 1=DCV N/O 2=DCV N/C 3=Override N/O 4=Override N/C		0		IAQINCFG	
II.FN	IAQ Switch Fan Config	0=Never 1=Occupied 2=Always		0		IAQINFAN	
AQ.MN	Econo Min IAQ Position	0 to 100	%	10 0: FIOP EnergyX		IAQMINP	
OVR.P	IAQ Override Position	0 to 100	%	100		IAQOVPOS	
OA.CF	OAQ Analog Input Config	0=No OAQ 1=DCV 2=Lockout OAQ		0		OAQANCFG	
OAQ.L	OAQ Lockout Limit	0 to 5000		600		OAQLOCK	
AQD.L	AQ Differential Low	0 to 5000		100		DAQ_LOW	
AQD.H	AQ Differential High	0 to 5000		700		DAQ_HIGH	
DF.ON	Fan On AQ Differential	0 to 5000		600		DAQFNON	
DF.OF	Fan Off AQ Differential	0 to 5000		200		DAQFNOFF	
I.4M	IAQ Sensor Value at 4mA	0 to 5000		0		IAQ_4MA	
I.20M	IAQ Sensor Value at 20mA	0 to 5000		2000		IAQ_20MA	
O.4M	OAQ Sensor Value at 4mA	0 to 5000		0		OAQ_4MA	
O.20M	OAQ Sensor Value at 20mA	0 to 5000		2000		OAQ_20MA	
H.4M	RH Sensor Value at 4mA	0 to 50	%	0		RH_4MA	
H.20M	RH Sensor Value at 20mA	60 to 100	%	100		RH_20MA	
OAU	Outside Air Unit Config				OAU_CFG		
OA.TY	Outdoor Air Unit Type	0=No OAU 1=ERV Module 2=Economizer 3=Pwr Exhaust 4=OA Monitor 5=100% OA Unit 6=EXv1 ERV		0: no FIOP 1: FIOP EnergyX		OAU_TYPE	
OA.FC	Outside Air Fan Curve	0 to 999		1: 04 2: 05–06 3: 07 4: 08–12 5: 14 6: 17–20 7: 24–28		OAFANCRV	
PE.FC	Exhaust Air Fan Curve	0 to 999		1: 04, 1ph, and econ 2: 04, 3ph, and econ 3: 04, 1ph, and no econ 4: 04, 3ph, and no econ 5: 05–06 1ph 6: 05–06 3ph 7: 07 8: 08–12 9: 14 10: 17–20 and econ 11: 17–20 and no econ 12: 24–28		PEFANCRV	
U.RUN	OAU Unoccupied Operation	No/Yes		NO		UNOCCRUN	
OAU.F	Shut Down on Fan Failure	No/Yes		Yes		FATALOAU	
M.WHL	Modulating Wheel Install	No/Yes		NO		MODWHEEL	
OA.MN	Minimum Outside Air CFM	0 to 32000	CFM	375: 04 800: 05–06 1000: 07 2500: 08–12 3000: 14 4000: 17–20 5000: 24–28		MINOACFM	
DCV.M	Min DCV Outside Air CFM	0 to 32000	CFM	100: 04 250: 05–06 600: 07 1000: 08–12 1500: 14–24 2000: 24–28		MINDCVSP	
PEX.C	Power Exhaust Control	0=Offset CFM 1=BP		0		PEX_CTL	
PE.OF	Power Exhaust CFM Offset	–17000 to 17000	CFM	–200		EXOFFSET	
BP.SP	Building Pressure Setpnt	–0.25 to 0.25	in H2O	0.05		OAU_BPSP	
OA.TM	Outside Air Tempering	Disable/Enable		Disable		OATEMPER	
TM.LO	OA Tempring Lockout Temp	0 to 80	°F	60		OATMPLOC	

ITEM	EXPANSION	RANGE	UNITS	DEFAULT	CCN TABLE/ Sub–TABLE	CCN POINT	ENTRY
OAU (cont)	Outside Air Unit Config				OAU_CFG		
TM.SP	OA Tempring SAT Setpoint	35 to 80	°F	55		OATMPSPT	
OAC.K	Outside Air CFM k Factor	0.8 to 1.2		1		OACFM_K	
EXC.K	Exhaust Air CFM k Factor	0.8 to 1.2		1		EXCFM_K	
OAFB	OAU Fan Boost Enable	No/Yes		No		EFB_ENBL	
ALM.O	Alarm Relay Config.				ALM_CFG		
A.SPC	SPT/SPRH Sensor Failure	No/Yes		Yes		SPACE_AL	
A.SRT	SAT/RAT Sensor Failure	No/Yes		Yes		SATRATAL	
A.OAT	OAT Thermistor Failure	No/Yes		Yes		OAT_AL	
A.CMP	Compressor Failure	No/Yes		Yes		COMP_AL	
A.CKT	Refrig Circuit Failure	No/Yes		Yes		CKT_AL	
A.SSP	SSP Transducer Failure	No/Yes		Yes		SSP_AL	
A.SCT	SCT Thermistor Failure	No/Yes		Yes		SCT_AL	
A.FAN	Indoor Fan Failure	No/Yes		Yes		FAN_AL	
A.FIL	Dirty Filter	No/Yes		Yes		FILT_AL	
A.TST	Thermostat Failure	No/Yes		Yes		TSTAT_AL	
A.ECO	Economizer Failure	No/Yes		Yes		ECON_AL	
A.OAU	Outside Air unit Alarms	No/Yes		Yes		OAU_AL	
PID	PID Configurations				PID_CFG		
EC.P	Economizer PID – kP	0.00 to 99.90		2.5		ECONO_P	
EC.I	Economizer PID – kI	0.00 to 99.90		0.12		ECONO_I	
EC.D	Economizer PID – kD	0.00 to 99.90		1		ECONO_D	
EC.DT	Economizer PID – rate	10.00 to 180.00	secs	15		ECONO_DT	
EC.DB	Economizer PID Deadband	0 to 25	%	3		ECONBAND	
LK.P	Linkage Staging PID – kP	0.00 to 99.90		10		LINK_P	
LK.I	Linkage Staging PID – kI	0.00 to 99.90		5		LINK_I	
LK.D	Linkage Staging PID – kD	0.00 to 99.90		5		LINK_D	
LK.DT	Linkage Staging PID – rate	10.00 to 180.00	secs	30		LINK_DT	
(GENERIC = CCN only)					GENERICS		
	POINT 01 Definition					Point_01	
	POINT 02 Definition					Point_02	
	POINT 03 Definition					Point_03	
	POINT 04 Definition					Point_04	
	POINT 05 Definition					Point_05	
	POINT 06 Definition					Point_06	
	POINT 07 Definition					Point_07	
	POINT 08 Definition					Point_08	
	POINT 09 Definition					Point_09	
	POINT 10 Definition					Point_10	
	POINT 11 Definition					Point_11	
	POINT 12 Definition					Point_12	
	POINT 13 Definition					Point_13	
	POINT 14 Definition					Point_14	
	POINT 15 Definition					Point_15	
	POINT 16 Definition					Point_16	
	POINT 17 Definition					Point_17	
	POINT 18 Definition					Point_18	
	POINT 19 Definition					Point_19	
	POINT 20 Definition					Point_20	
TRIM	Sensor Calibration				(CCN TRIM – see Maintenance Display)		
SPT.C	Space Temp Calibration	–30 to 130	°F				
SPT.T	Space Temp Trim	–30 to 30	^F	0			
SAT.C	Supply Air Temp Calib.	–30 to 130	°F				
SAT.T	Supply Air Temp Trim	–30 to 30	^F	0			
RAT.C	Return Air Temp Calib.	–30 to 130	°F				
RAT.T	Return Air Temp Trim	–30 to 30	^F	0			
					CCN CONFIGURATION		
CCN	CCN Configuration				48_50_HC		
CCN.A	CCN Element Number	1 to 239		1		CCNADD	
CCN.B	CCN Bus Number	0 to 239		0		CCNBUS	
BAUD	CCN Baud Rate	1=2400 2=4800 3=9600 4=19200 5=38400		3		CCNBAUDD	
BROD	CCN Broadcast Config.				BRODEFS		
B.TIM	CCN Time/Date Broadcast	No/Yes		No		CCNBC	
B.OAT	CCN OAT Broadcast	No/Yes		No		OATBC	
B.GS	Global Schedule Broadcst	No/Yes		No		GSBC	
B.ACK	CCN Broadcast Ack'er	No/Yes		No		CCNBCACK	

MODE — CONFIGURATION (cont)

ITEM	EXPANSION	RANGE	UNITS	DEFAULT	CCN TABLE/ Sub–TABLE	CCN POINT	ENTRY
SCH.O	CCN Schedule Overrides				SCHEDOVR		
SCH.N	Schedule Number	0 = Always Occupied 1–64 = Local Schedule 65–99 = Global Schedule		0		SCHEDNUM	
HOL.G	Accept Global Holidays	No/Yes		No		HOLIDAYT	
OV.TL	Override Time Limit	0 to 4	hours	4		OTL	
OV.EX	Timed Override Hours	0 to 4	hours	0		OVR_EXT	
OV.SP	SPT Override Enabled	No/Yes		Yes		TIMEOVER	
LDSH	CCN LOADSHED CONFIG.				LOADSHED		
S.GRP	Loadshed Group Number	0 to 16		0		SHED_NUM	
R.MXC	Redline Max Cool Stages	0 to 3		2		MAXCREDL	
S.MXC	Loadshed Max Cool Stages	0 to 3		2		MAXCSHED	
R.MXH	Redline Max Heat Stages	0 to 2		2		MAXHREDL	
S.MXH	Loadshed Max Heat Stages	0 to 2		2		MAXHSHED	

UNIT START-UP CHECKLIST

MODEL NO.: _____ SERIAL NO: _____

DATE: _____ TECHNICIAN: _____

I. PRE-START-UP:

- ☐ VERIFY THAT ALL PACKAGING MATERIALS HAVE BEEN REMOVED FROM UNIT
- ☐ VERIFY INSTALLATION OF OUTDOOR AIR HOOD
- ☐ VERIFY INSTALLATION OF FLUE EXHAUST AND INLET HOOD (48HC ONLY)
- ☐ VERIFY THAT CONDENSATE CONNECTION IS INSTALLED PER INSTALLATION INSTRUCTIONS
- ☐ VERIFY THAT ALL ELECTRICAL CONNECTIONS AND TERMINALS ARE TIGHT
- ☐ VERIFY GAS PRESSURE TO UNIT GAS VALVE IS WITHIN SPECIFIED RANGE (48HC ONLY)
- ☐ CHECK GAS PIPING FOR LEAKS (48HC ONLY)
- ☐ CHECK THAT INDOOR-AIR FILTERS ARE CLEAN AND IN PLACE
- ☐ CHECK THAT OUTDOOR AIR INLET SCREENS ARE IN PLACE
- ☐ VERIFY THAT UNIT IS LEVEL
- ☐ CHECK FAN WHEELS AND PROPELLER FOR LOCATION IN HOUSING/ORIFICE AND VERIFY SETSCREW IS TIGHT
- ☐ VERIFY THAT FAN SHEAVES ARE ALIGNED AND BELTS ARE PROPERLY TENSIONED
- ☐ VERIFY THAT SCROLL COMPRESSORS ARE ROTATING IN THE CORRECT DIRECTION
- ☐ VERIFY INSTALLATION OF THERMOSTAT/SPACE SENSOR
- ☐ VERIFY CONFIGURATION VALUES FOR ELECTRONIC CONTROLS (REFER TO CONTROL SET UP CHECKLIST)
- ☐ VERIFY THAT CRANKCASE HEATERS HAVE BEEN ENERGIZED FOR AT LEAST 24 HOURS

II. START-UP

ELECTRICAL

SUPPLY VOLTAGE	L1-L2	_____	L2-L3	_____	L3-L1	_____
COMPRESSOR AMPS — COMPRESSOR A1			L1	_____	L2	_____ L3 _____
— COMPRESSOR B1			L1	_____	L2	_____ L3 _____
ELECTRIC HEAT AMPS (IF EQUIPPED)			L1	_____	L2	_____ L3 _____
SUPPLY FAN AMPS			L1	_____	L2	_____ L3 _____

TEMPERATURES

OUTDOOR-AIR TEMPERATURE	_____	F DB (Dry Bulb)	_____	F WB (Wet Bulb)
RETURN-AIR TEMPERATURE	_____	F DB	_____	F WB
COOLING SUPPLY AIR	_____	F DB	_____	F WB
GAS HEAT SUPPLY AIR (48HC)	_____	F	_____	F
ELECTRIC HEAT SUPPLY AIR (50HC)	_____	F	_____	F

PRESSURES

GAS INLET PRESSURE		_____	IN. WG			
GAS MANIFOLD PRESSURE	STAGE NO. 1	_____	IN. WG	STAGE NO. 2	_____	IN. WG
REFRIGERANT SUCTION	CIRCUIT A	_____	PSIG	CIRCUIT A Superheat	_____	degF
	CIRCUIT B	_____	PSIG	CIRCUIT B Superheat	_____	degF
REFRIGERANT DISCHARGE	CIRCUIT A	_____	PSIG	CIRCUIT A Subcooling	_____	degF
	CIRCUIT B	_____	PSIG	CIRCUIT B Subcooling	_____	degF

- ☐ VERIFY REFRIGERANT CHARGE USING CHARGING CHARTS

GENERAL

- ☐ ECONOMIZER MINIMUM VENT AND CHANGEOVER SETTINGS TO JOB REQUIREMENTS

Copyright 2011 Carrier Corp. • 7310 W. Morris St. • Indianapolis, IN 46231 Printed in U.S.A. Edition Date: 12/11 **Catalog No: 48−50HC−C01T**

Manufacturer reserves the right to change, at any time, specifications and designs without notice and without obligations.

Replaces: New