48VR-K
Performance™ Up to15.5 SEER2 2-Stage Packaged HYBRID HEAT® Dual Fuel System with Puron® (R-410A) Refrigerant
Single Phase
2-5 Nominal Tons (Sizes 24-60)

Carrier®
Turn to the experts

Product Data

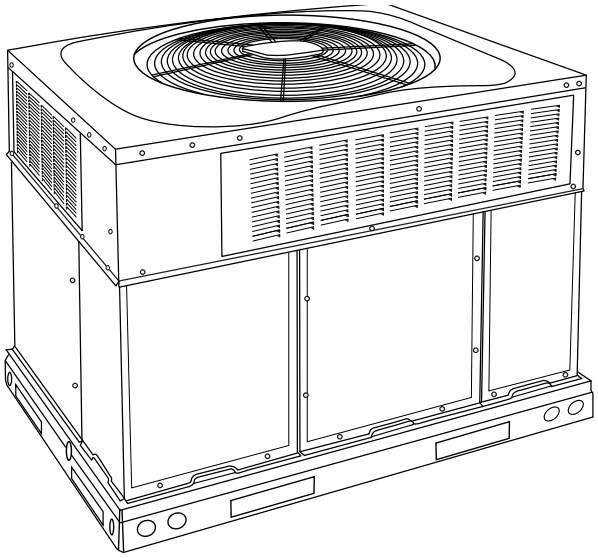

A09033

Fig. 1 – Unit 48VR

Single-Packaged Products with Energy-Saving Features and Puron® refrigerant.

- Up to 15.5 SEER2
- Up to 12.0 EER2
- Up to 7.5 HSPF2
- 81% AFUE
- Direct Spark Ignition
- Factory-Installed TXV
- Multi-speed ECM Blower Motor-Standard
- Sound Levels as low as 69dBA
- Two Stage Cooling
- Two Stage Heating (208/230 VAC models)
- Dehumidification Feature

Features/Benefits

One-piece heating and cooling units with low sound levels, easy installation, low maintenance, and dependable performance.

Puron Refrigerant is Carrier's unique refrigerant is designed to be environmentally balanced. Puron is an HFC refrigerant which does not contain chlorine that can harm the ozone layer. Puron refrigerant is in service in millions of systems proving highly reliable and is non-ozone depleting.

Easy Installation

Factory-assembled package is a compact, fully self-contained, combination gas heating/electric cooling unit that is prewired, pre-piped, and pre-charged for minimum installation expense. These units are available in a variety of standard and optional heating/cooling size combinations with voltage options to meet residential and light commercial requirements. Units are lightweight and install easily on a rooftop or at ground level. The high tech composite base eliminates rust problems associated with ground level applications.

Innovative Unit Base Design

On the inside a high-tech composite material will not rust and incorporates a sloped drain pan which improves drainage and helps inhibit mold, algae and bacterial growth. On the outside metal base rails provide added stability as well as easier handling and rigging.

Convertible duct configuration

Unit is designed for use in either downflow or horizontal applications. Each unit is converted from horizontal to downflow and includes two horizontal duct covers. Downflow operation is provided in the field to allow vertical ductwork connections. The basepan seals on the bottom openings to ensure a positive seal in the vertical airflow mode.

Efficient Operation

High-efficiency design offers SEER2 (Seasonal Energy Efficiency Ratios) of up to 15.5, 12.0 EER2, HSPF2 of 7.5, and AFUE (Annual Fuel Utilization Efficiency) ratings as high as 81%.

Energy-saving, direct spark ignition saves gas by operating only when the room thermostat calls for heating. Standard units are furnished with natural gas controls. A low-cost field installed kit for propane conversion is available for all units.

Low NOx units are designed for California installations and meet 40 ng/J NOx emissions. Can be installed in air quality management districts with a 40 ng/J NOx emissions requirement.

Durable, dependable components

Compressors have two stages of cooling and are designed for high efficiency. Each compressor is hermetically sealed against contamination to help promote longer life and dependable operation. Each compressor also has vibration isolation to provide quieter operation. All compressors have internal high pressure and overcurrent protection.

Monoport inshot burners produce precise air-to-gas mixture, which provides for clean and efficient combustion. The large monoport on the inshot (or injection type) burners seldom, if ever, requires cleaning. All gas furnace components are accessible in one compartment.

Turbo-tubular™ heat exchangers are constructed of stainless steel for corrosion resistance and optimum heat transfer for improved efficiency. The tubular design permits hot gases to make multiple passes across the path of the supply air.

In addition, dimples located on the heat exchanger walls force the hot gases to stay in close contact with the walls, improving heat transfer.

Stainless steel heat exchanger available as factory installed option.

Multi-speed ECM Blower Motor is standard on all models.

High Efficiency Inducer Motor on single phase models.

Direct-drive PSC (Permanent Split Capacitor) condenser-fan motors are designed to help reduce energy consumption and provide for

cooing operation down to 40°F (4.4°C) outdoor temperature. Motormaster® II low ambient kit is available as a field-installed accessory.

Thermostatic Expansion Valve - A hard shutoff, balance port TXV maintains a constant superheat at the evaporator exit (cooling cycle) resulting in higher overall system efficiency.

Refrigerant system is designed to provide dependability. Liquid filter driers are used to promote clean, unrestricted operation. Each unit leaves the factory with a full refrigerant charge. Refrigerant service connections make checking operating pressures easier.

High and Low Pressure Switches provide added reliability for the compressor.

Indoor and Outdoor coils are computer-designed for optimum heat transfer and efficiency. The indoor coil is fabricated from copper tube and aluminum fins and is located inside the unit for protection against damage. The outdoor coil is internally mounted on the top tier of the unit.

Low sound ratings ensure a quiet indoor and outdoor environment with sound ratings as low as 69dBA.

Dehumidification Feature

This unit has independent fan speeds for low stage cooling and high stage cooling. In addition, 208/230 VAC models have the field-selectable capability to run an enhanced dehumidification (’DHUM’) speed on high stage cooling (as low as 320CFM per ton). Coupled with the improved dehumidification associated with low stage cooling, the DHUM speed allows for a complete dehumidification solution independent of cooling stage. 208/230 VAC models also have independent fan speeds for low stage gas heating and high stage gas heating. The dehumidification control must open the control circuit on humidity rise above the dehumidification set point.

Heating

- Reliable direct spark ignition system
- Inducer motors with ball bearings
- Low stage heating delivers 65% of high-stage capacity (208/230 VAC models)

Easy to service cabinets provide easy 3-panel accessibility to serviceable components during maintenance and installation. The basepan with integrated drain pan provides easy ground level installation with mounting pad. A nesting feature ensures a positive basepan to roof curb seal when the unit is roof mounted. A convenient 3/4-in. (19.05 mm) wide perimeter flange makes frame mounting on a rooftop easy.

Standard horizontal metal duct covers with insulation come with the unit and cover the horizontal duct openings. These can be left in place if the units are converted to downflow.

Integrated Gas Control (IGC) board provides safe and efficient control of heating and simplifies trouble-shooting through its built-in diagnostic function.

Cabinets are constructed of heavyduty, phosphated, zinc-coated prepainted steel capable of withstanding 500 hours in salt spray. Interior surfaces of the evaporator/heat exchanger compartment are insulated with foil-faced insulation, which keeps the conditioned air from being affected by the outdoor ambient temperature and provides improved indoor air quality. (Conforms to American Society of Heating, Refrigeration and Air Conditioning Engineers 62.2.) The sloped drain pan minimizes standing water in the drain. An external drain is provided.

Louvered grille provides hail and vandalism protection for the coil.

Short-Cycling protection for the compressor is incorporated into our defrost control board ensuring a five minute delay (+/-2 minutes) before restarting compressor after shutdown for any reason.

Limited Warranty

- Default 5-year parts limited warranty
  - 10-year parts limited warranty with timely registration. Equipment must be registered within 90 days of original installation, except in jurisdictions where warranty benefits cannot be conditioned on registration.

* Applies to original purchaser/homeowner and 5 years to subsequent owners.

- Default 5-year on compressor limited warranty
  - 10-year on compressor limited warranty with timely registration. Equipment must be registered within 90 days of original installation, except in jurisdictions where warranty benefits cannot be conditioned on registration.

* Applies to original purchaser/homeowner and 5 years to subsequent owners.

- Default 20-year stainless steel heat exchanger limited warranty
  - Life stainless steel limited warranty with timely registration. Equipment must be registered within 90 days of original installation, except in jurisdictions where warranty benefits cannot be conditioned on registration.

* Applies to original purchaser/homeowner and 20 years to subsequent owners.

See Warranty certificate for complete details

Table of Contents

Features/Benefits 1
Model Number Nomenclature 3
Physical Data 5
Accessories 6
Performance Data 11
Gas Adjustment 20
Typical Piping Wiring 41
Application Data 42
Electrical Data 42
Controls 45
Guide Specifications 46

Model Number Nomenclature

48VR – K 24 040 3 0

Type of Unit
48VR - Two-Stage
Packaged HYBRID HEAT
Dual Fuel System

Low NOx Indicator
- Standard
N - Low NOx

Minor Series

Electrical Supply
3 - 208/230-1-60

Major Series

Heat Input Size (Btuh)
040 - 40,000
060 - 60,000
090 - 90,000
115 - 115,000
130 - 127,000

Nominal Cooling Capacity
24 - 2.0 Tons
36 - 3.0 Tons
48 - 4.0 Tons
60 - 5.0 Tons

ASHRAE 90.1 COMPLIANT

GAS-FIRED C UL US LISTED

C UL US LISTED

AHRI CERTIFIED www.ahridirectory.org

Use of the AHRI Certified TM Mark indicates a manufacturer's participation in the program For verification of certification for individual products, go to www.ahridirectory.org.

Energy ENERGY STAR

For California Residents:
For installation in SCAQMD only: This furnace does not meet the SCAQMD Rule 1111 14ng/J NOx emission limit, and thus is subject to a mitigation fee of up to $450. This furnace is not eligible for the Clean Air Furnace Rebate Program: www.CleanAirFurnaceRebate.com.

SAP ORDERING NO.	NOMINAL COOLING CAPACITY (Btuh)	NOMINAL HEATING INPUT (Btuh)	VOLTS-PHASE (60 HZ)	APPROX SHIP WT (LB)
Base Units				
48VR-K240603	24,000	60,000	208/230-1	362
48VR-K360603	36,000	60,000	208/230-1	467
48VR-K360903	36,000	90,000	208/230-1	467
48VR-K480903	48,000	90,000	208/230-1	509
48VR-K481153	48,000	115,000	208/230-1	509
48VR-K481303	48,000	127,000	208/230-1	509
48VR-K600903	60,000	90,000	208/230-1	562
48VR-K601153	60,000	115,000	208/230-1	562
48VR-K601303	60,000	127,000	208/230-1	562
Low NOx Units				
48VRNK240603	24,000	60,000	208/230-1	362
48VRNK360603	36,000	60,000	208/230-1	467
48VRNK360903	36,000	90,000	208/230-1	467
48VRNK480903	48,000	90,000	208/230-1	509
48VRNK481153	48,000	115,000	208/230-1	509
48VRNK481303	48,000	127,000	208/230-1	509
48VRNK600903	60,000	90,000	208/230-1	562
48VRNK601153	60,000	115,000	208/230-1	562
48VRNK601303	60,000	127,000	208/230-1	562

Manufacturer reserves the right to change, at any time, specifications and designs without notice and without obligations.

AHRI* Capacities

Cooling Capacities and Efficiencies

Unit Size	Nominal Tons	Standard CFM (High / Low Stage)	Net Cooling Capacity - Btuh (High Stage)	EER2 @ A**	SEER2†
24	2	855 / 675	22400	11.5	15.2
36	3	1200 / 900	34200	12	15.5
48	4	1600 / 1200	47000	11.5	15.5
60	5	1750 / 1400	56000	11.5	15.2

Heat Pump Heating Capacities and Efficiencies

Unit Size	Heating Capacity - Btuh (High Stage) @ 47°F (8.3°C) Outdoor Temperature	COP (High Stage) @ 47°F (8.3°C) Outdoor Temperature	Heating Capacity - Btuh (High Stage) @ 17°F (-8.3°C) Outdoor Temperature	COP (High Stage) @ 17°F (-8.3°C) Outdoor Temperature	HSPF2	Heating Cd
24	23800	3.9	12900	2.5	7.2	0.25
36	34400	3.8	18900	2.4	7.2	0.25
48	45000	3.6	26000	2.4	7.2	0.25
60	56500	3.8	32400	2.5	7.5	0.25

LEGEND
dB-Sound Levels (decibels)
db—Dry Bulb
SEER—Seasonal Energy Efficiency Ratio
wb—Wet Bulb
COP-Coefficient of Performance
* Air Conditioning, Heating & Refrigeration Institute.
**At "A" conditions-80°F (26.7C) indoor db/67°F (19.4°C) indoor wb & 95°F (35°C) outdoor db.
1. Rated in accordance with U.S. Government DOE Department of Energy) test procedures and/or AHRI Standards 210/240.
Notes:
1. Ratings are net values, reflecting the effects of circulating fan heat. Ratings are based on:
Cooling Standard: 80°F (26.7°C) db, 67°F wb (19.4°C) indoor entering-air temperature and 95°F db (35°C) outdoor entering-air temperature.
2. Before purchasing this appliance, read important energy cost and efficiency information available from AHRIdirectory.org.

AHRI* Capacities

Heating Capacities and Efficiencies

208/230 VAC Models Single Phase

Unit Size	Heating Input (Btuh) High/Low	Output Capacity (Btuh) High / Low	Temperature Rise Range High °F (°C)	Temperature Rise Range Low °F (°C)	AFUE (%)
30040	40,000 / 26,000	33,000 / 22,000	25-55 (14-31)	25-55 (14-31)	81.0
24060 30060 36060 42060	60,000 / 39,000	49,000 / 32,000	25-55 (14-31)	25-55 (14-31)	81.0
36090 42090 48090 60090	90,000 / 58,500	74,000 / 48,000	35-65 (19-36)	35-65 (19-36)	81.0
48115 60115	115,000 / 75,000	94,000 / 62,000	30-60 (17-33)	30-60 (17-33)	81.0
48130 60130	127,000 / 84,500	104,000 / 70,000	35-65 (19-36)	35-65 (19-36)	81.0

LEGEND
AFUE - Annual Fuel Utilization Efficiency
NOTE: Before purchasing this appliance, read important energy cost and efficiency information available from AHRIdirectory.org.

A-Weighted Sound Power Level (dBA)

UNIT SIZE	STANDARD RATING (dBA)	TYPICAL OCTAVE BAND SPECTRUM (dBA without tone adjustment)						
		125	250	500	1000	2000	4000	8000
24	69	51.1	55.8	60.4	66.5	61.8	57.9	49.3
36	73	59.1	63.1	68.6	68.1	64.3	61.3	56.8
48	74	59.5	65.0	70.0	67.0	64.5	60.5	52.5
60	71	59.0	61.3	65.6	66.6	62.3	58.6	51.3

NOTE: Tested in compliance with AHRI 270 but not listed with AHRI.

Physical Data

UNIT SIZE	24060	36060	36090	48090	48115	48130	60090	60115	60130
NOMINAL CAPACITY (ton)	2	3	3	4	4	4	5	5	5
SHIPPING WEIGHT** lb.	362	467	467	509	509	509	562	562	562
SHIPPING WEIGHT** (kg)	164	212	212	231	231	231	255	255	255
COMPRESSORS	Scroll								
Quantity	1								
REFRIGERANT (R-410A)									
Quantity lb	8.2	10.0	10.0	12.0	12.0	12.0	16.6	16.6	16.6
Quantity (kg)	3.7	4.5	4.5	5.4	5.4	5.4	7.53	7.53	7.53
REFRIGERANT METERING DEVICE	TXV, Indoor TXV								
ORIFICE OD in.	.032 (2)	.042 (2)	.042 (2)	.042 (2)	.042 (2)	.042 (2)	.052 (2)	.052 (2)	.052 (2)
(mm)	.81 (2)	1.07 (2)	1.07 (2)	1.07 (2)	1.07 (2)	1.07 (2)	1.32 (2)	1.32 (2)	1.32 (2)
OUTDOOR COIL									
Rows...Fins/in.	1...21	2...21	2...21	2...21	2...21	2...21	2...21	2...21	2...21
Face Area (sq ft)	18.8	13.6	13.6	17.5	17.5	17.5	23.3	23.3	23.3
OUTDOOR FAN									
Nominal CFM	2100	3000	3000	3300	3300	3300	3600	3600	3600
Diameter in.	24	26	26	26	26	26	26	26	26
Diameter (mm)	609.6	660.4	660.4	660.4	660.4	660.4	660.4	660.4	660.4
Motor Hp (Rpm)	1/12 (800)	1/5 (810)	1/5 (810)	1/5 (810)	1/5 (810)	1/5 (810)	1/5 (810)	1/5 (810)	1/5 (810)
INDOOR COIL									
Rows...Fins/in.	3...17	3...17	3...17	3...17	3...17	3...17	4...17	4...17	4...17
Face Area (sq ft)	3.7	4.7	4.7	5.7	5.7	5.7	5.7	5.7	5.7
INDOOR BLOWER									
Nominal Low Stage Cooling Airflow (Cfm)	675	900	900	1200	1200	1200	1400	1400	1400
Nominal High Stage Cooling Airflow (Cfm)	855	1200	1200	1600	1600	1600	1750	1750	1750
Size in.	10x10	11x10	11x10	11x10	11x10	11x10	11x10	11x10	11x10
Size (mm.)	254x254	279.4x254	279.4x254	279.4x254	279.4x254	279.4x254	279.4x254	279.4x254	279.4x254
Motor HP (RPM)	1/2 (1050)	3/4 (1000)	3/4 (1000)	1.0 (1075)	1.0 (1075)	1.0 (1075)	1.0 (1075)	1.0 (1075)	1.0 (1075)
FURNACE SECTION*									
Burner Orifice No. (Qty...Drill Size)									
Natural Gas (Factory Installed)	3...44	3...44	3…38	3...38	3...33	3...31	3...38	3...33	3...31
Propane Gas	3...55	3...55	3…53	3...53	3...51	3...49	3...53	3...51	3...49
HIGH-PRESSURE SWITCH (psig) Cut-out Reset (Auto)	650 +/- 15 420 +/- 25								
LOSS-OF-CHARGE / LOW-PRESSURE SWITCH (Liquid Line) (psig) cut-out Reset (auto)	20 +/- 5 45 +/- 5								
RETURN-AIR FILTERS†									
Throwaway Size in.	20x24x1	24x30x1		24x36x1					
(mm)	508x610x25	610x762x25		610x914x25					

*. Based on altitude of 0 to 2000 ft (0-610 m).

†. Required filter sizes shown are based on the larger of the AHRI (Air Conditioning Heating and Refrigeration Institute) rated cooling airflow or the heating airflow velocity of 300 ft/minute for throwaway type. Air filter pressure drop for non-standard filters must not exceed 0.08 IN. W.C.
If using accessory filter rack refer to the filter rack installation instructions for correct filter sizes and quantity.

Manufacturer reserves the right to change, at any time, specifications and designs without notice and without obligations.

Accessories

Accessory Model Number	Description	Use With
CPRFCURB011B00*	Roof Curb, 14-in. High	24
CPRFCURB013B00	Roof Curb, 14-in. High	36 - 60
CPADCURB001A00†	Adapter curb	24
CPADCURB002A00†	Adapter curb	36 - 60
CPGSKTKIT001A00	Gasket Kit for existing roof curb with new base rail unit	24
CPMANDPR007A00	Manual Outside Air Damper - (Includes filter rack and 1-in. filter, same as CPFILTRK kit)	24
CPMANDPR008A00		36
CPMANDPR009A00		48 - 60
ECD-SDSML-JC2-ADB†	Vertical economizer with Jade Honeywell W7220 controller, Honeywell communicating actuator, and dry bulb sensor. (Contact MicroMetl Customer Service at 1-800-662-4822 to order)	24
ECD-SDLGS-JC2-ADB†		36
ECD-SDLGB-JC2-ADB†		48 - 60
ECH-SDSML-JC2-ADB†	Horizontal economizer with Jade Honeywell W7220 controller, Honeywell communicating actuator, and dry bulb sensor. (Contact MicroMetl Customer Service at 1-800-662-4822 to order)	24
ECH-SDLGS-JC2-ADB†		36
ECH-SDLGB-JC2-ADB†		48 - 60
CPFILTRK007A00	Internal Filter Rack (includes 1-in. filters)	24
CPFILTRK008A00		36
CPFILTRK009A00		48 - 60
CPLOWAMB001A00	Low Ambient Control	All
NRTIMEGD001A00	Five Minute Compressor Delay	All
CPHSTART002A00	PTC Compressor Start Assist Kit	All
CPCRKHTR008A00	240V Crankcase Heater	24 - 36 Single Phase
CPCRKHTR004A00		48 Single Phase
Standard		60 Single Phase
CPLPCONV013C00‡	Natural to LP Conversion Kit (0 - 2000 ft)	All (except Low NOx)
CPLPCONV014C00‡	Natural to LP Conversion Kit (2001 - 6000 ft)	All (except Low NOx)
CPNGCONV004C00‡	LP to Natural Gas Conversion Kit (0 - 2000 ft)	All (except Low NOx)
CPFLUEDS001A00	Flue Discharge Deflector Assembly	All
DUCFLG002A00	Square to Round (1 set of 2, use with horizontal duct flanges only)	24 - 48

*. CPFRCURB011B00 can be used with 36-60 size units with some overhang.
†. Contact MicroMetal Customer Service at 1-800-662-4822 to order.
‡. Three phase models may use “B00” or “C00” versions.

Unit Dimensions - 24

COOLING CAPACITY	UNIT WT.		UNIT HEIGHT IN/MM	CENTER OF GRAVITY IN/MM		
	LB	KG	"A"	X	Y	Z
24	353	160.2	51-3/4 1315	22-13/16 579.4	15-5/16 388.9	23.0 584.2

UNIT	CORNER WEIGHT LB/KG			
	"1"	"2"	"3"	"4"
24	53.0 24.0	70.6 32.0	105.9 48.0	123.6 56.1

NOTE: 1. ALL TABLE DATA RELEVANT FOR ALL FACTORY INSTALLED OPTIONS EXCEPT ECONOMIZER.
2. * - INDICATES ALL FIOP CODES FOR THE MODELS LISTED.

REQUIRED CLEARANCES TO COMBUSTIBLE MATL. INCHES [MM]
TOP OF UNIT.....14 [355.6]
DUCT SIDE OF UNIT.....14 [355.6]
SIDE OPPOSITE DUCTS.....14 [355.6]
BOTTOM OF UNIT.....1/2 [12.7]
FLUE PANEL.....36 [914.4]

NEC. REQUIRED CLEARANCES. INCHES [MM]
BETWEEN UNITS, POWER ENTRY SIDE.....42 [1066.8]
UNIT AND UNGROUNDED SURFACES, POWER ENTRY SIDE...36[914.0]
UNIT AND BLOCK OR CONCRETE WALLS AND OTHER
GROUNDED SURFACES, POWER ENTRY SIDE.....42 [1066.8]

REQUIRED CLEARANCE FOR OPERATION AND SERVICING INCHES [MM]
EVAP. COIL ACCESS SIDE.....36 [914.0]
POWER ENTRY SIDE.....42 [1066.8]
(EXCEPT FOR NEC REQUIREMENTS)
UNIT TOP.....48 [1219.2]
SIDE OPPOSITE DUCTS.....36 [914.0]
DUCT PANEL.....12 [304.8]*

*MINIMUM DISTANCES:IF UNIT IS PLACED LESS THAN 12 [304.8]
FROM WALL SYSTEM,THEN SYSTEM PERFORMANCE MAYBE COMPROMISED.

DIMENSIONS IN [] ARE IN MM

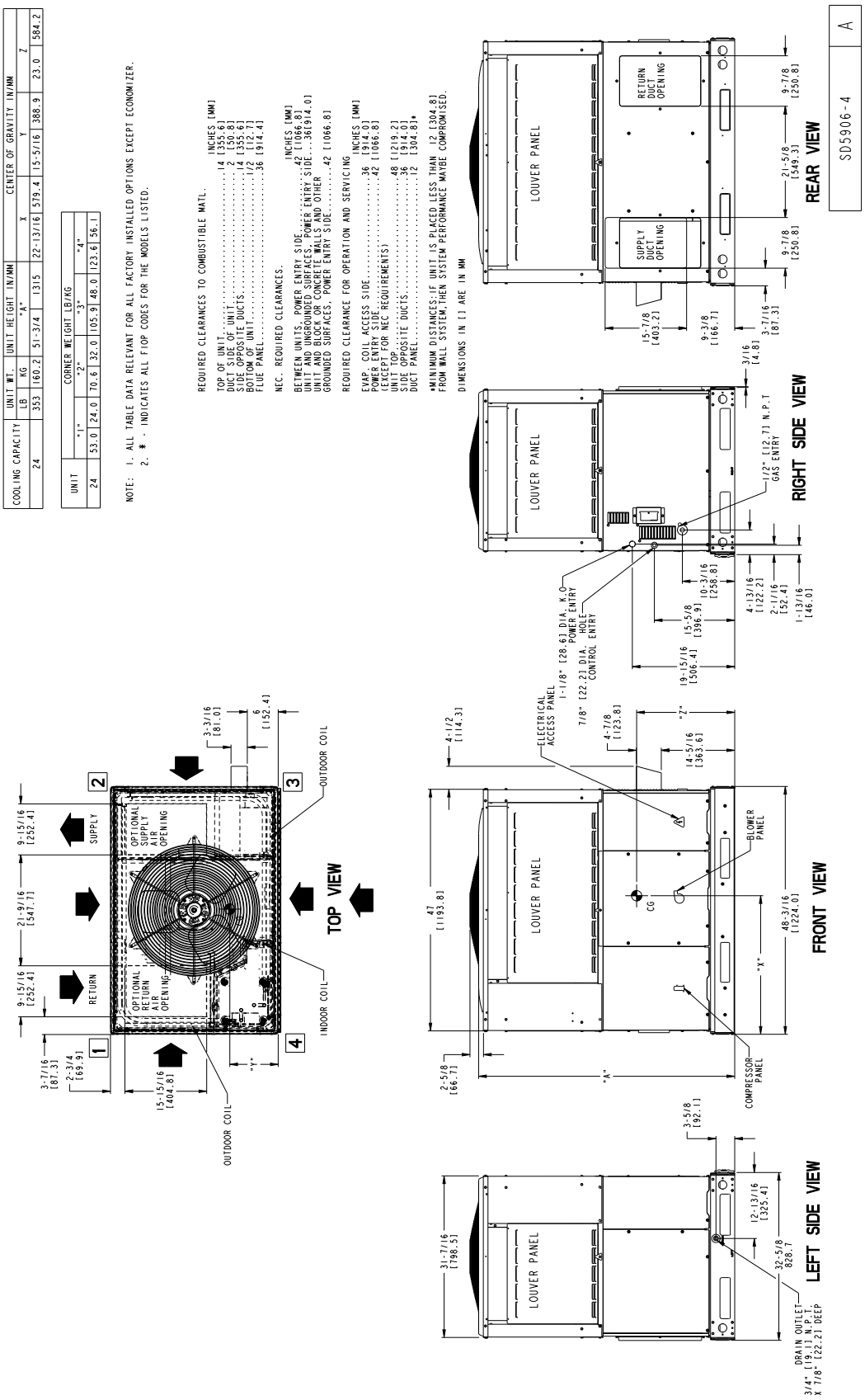

A230208

Unit Dimensions - 36-60

COOLING CAPACITY	UNIT WT.		UNIT HEIGHT IN/MM		CENTER OF GRAVITY IN/MM			
	LB	KG	"A"		X	Y	Z	
36	459	208.2	44-3/4	1137	22-13/16	579.4	18	457.2	17-1/8	435.0
48	501	227.3	48-3/4	1238	22-13/16	579.4	18	457.2	17-3/8	441.3
60	554	251.3	54-3/4	1391	22-13/16	579.4	18	457.2	17-5/8	447.7

UNIT	CORNER WEIGHT LB/KG							
	"1"		"2"		"3"		"4"	
36	68.9	31.2	91.8	41.6	137.7	62.5	160.7	72.9
48	75.2	34.1	100.2	45.5	150.3	68.2	175.4	79.5
60	83.1	37.7	110.8	50.3	166.2	75.4	193.9	88.0

NOTE: 1. ALL TABLE DATA RELEVANT FOR ALL FACTORY INSTALLED OPTIONS EXCEPT ECONOMIZER.
2. * - INDICATES ALL FIOP CODES FOR THE MODELS LISTED.

REQUIRED CLEARANCES TO COMBUSTIBLE MATL.

	INCHES [MM]
TOP OF UNIT	14 [355.6]
DUCT SIDE OF UNIT	2 [50.8]
SIDE OPPOSITE DUCTS	14 [355.6]
BOTTOM OF UNIT	1/2 [12.7]
FLUE PANEL	36 [914.4]

NEC. REQUIRED CLEARANCES.

	INCHES [MM]
BETWEEN UNITS, POWER ENTRY SIDE	42 [1066.8]
UNIT AND UNGROUNDED SURFACES, POWER ENTRY SIDE	36[914.0]
UNIT AND BLOCK OR CONCRETE WALLS AND OTHER GROUNDED SURFACES, POWER ENTRY SIDE	42 [1066.8]

REQUIRED CLEARANCE FOR OPERATION AND SERVICING

	INCHES [MM]
EVAP. COIL ACCESS SIDE	36 [914.0]
POWER ENTRY SIDE	42 [1066.8]
(EXCEPT FOR NEC REQUIREMENTS)	
UNIT TOP	48 [1219.2]
SIDE OPPOSITE DUCTS	36 [914.0]
DUCT PANEL	12 [304.8]*

*MINIMUM DISTANCES:IF UNIT IS PLACED LESS THAN 12 [304.8] FROM WALL SYSTEM,THEN SYSTEM PERFORMANCE MAYBE COMPROMISED.

DIMENSIONS IN [ ] ARE IN MM

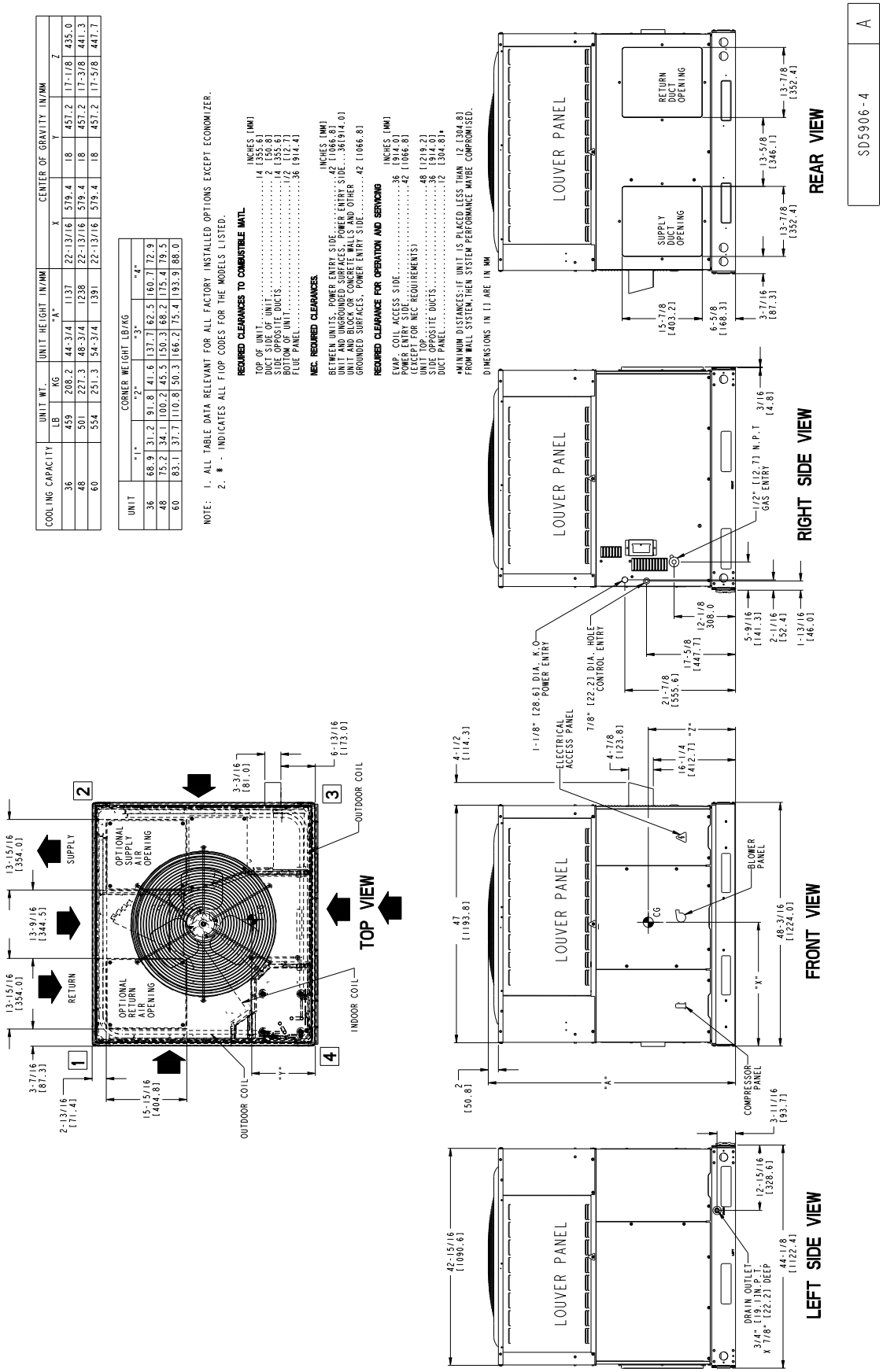

A230209

Accessory Dimensions

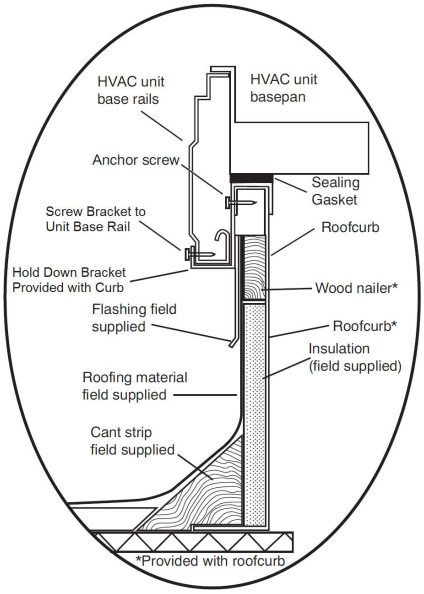

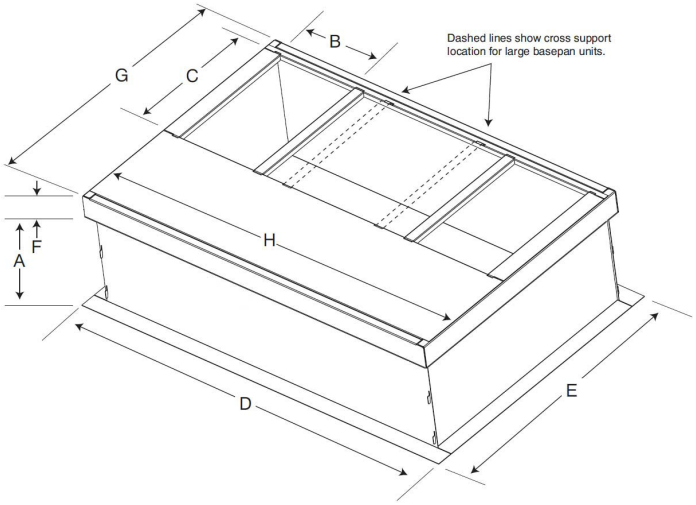

SMALL/COMMON CURB

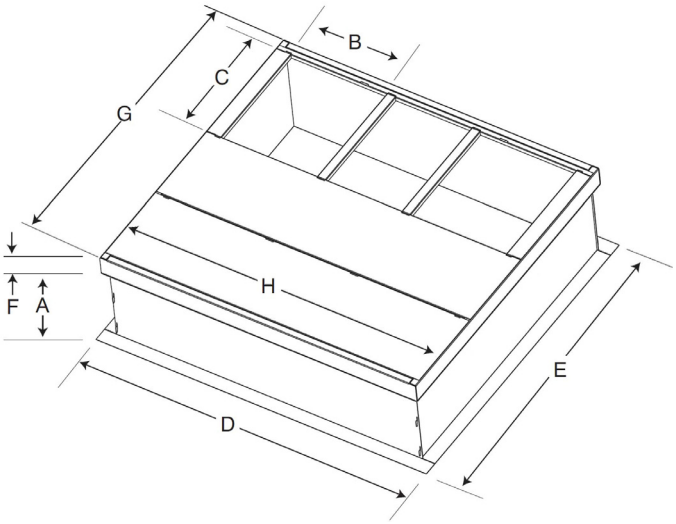

LARGE CURB

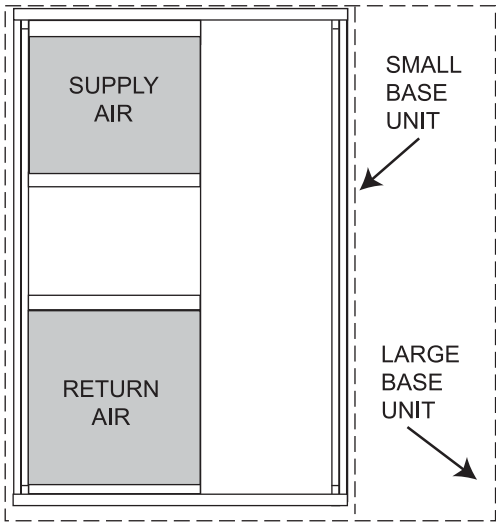

UNIT PLACEMENT ON COMMON CURB

SMALL OR LARGE BASE UNIT

A180216

Unit Size	Catalog Number	A in. (mm)	B (small / common base) in. (mm)*	B (large base) in. (mm)*	C in. (mm)	D in. (mm)	E in. (mm)	F in. (mm)	G in. (mm)	H in. (mm)
Small or Large	CPRFCURB011B00	14 (356)	10 (254)	14 (356)	16 (406)	47.8 (1214)	32.4 (822)	2.7 (69)	30.6 (778)	46.1 (1170)
Large	CPRFCURB013B00	14 (356)	14 (356)				43.9 (1116)		42.2 (1072)	

*. Part Number CPRCURB011B00 can be used on both small and large basepan units. The cross supports must be located based on whether the unit is a small basepan or a large basepan.

NOTES:
1. Roof curb must be set up for unit being installed.
2. Seal strip must be applied, as required, to unit being installed.
3. Roof curb is made of 16-gauge steel.
4. Attach ductwork to curb (flanges of duct rest on curb).
5. Insulated panels: 1-in. (25.4 mm) thick fiberglass 1 lb. density.

Manufacturer reserves the right to change, at any time, specifications and designs without notice and without obligations.

Selection Procedure (with example)

Determine cooling and heating requirements at design conditions:

Given:

Required Cooling Capacity (TC) ..... 34,000 Btuh
Sensible Heat Capacity (SHC) ..... 25,000 Btuh
Required Heating Capacity ..... 60,000 Btuh
Condenser Entering Air Temperature ..... 95°F (35°C)
Indoor-Air Temperature ..... 80°F (26°C)edb 67°F (19°C)ewb
Evaporator Air Quantity ..... 1200 CFM
External Static Pressure ..... 0.100 IN. W.C.
Electrical Characteristics 208-1-60

Select unit based on required cooling capacity.

Enter Net Cooling Capacities table at condenser entering temperature of 95°F (35°C). Unit 036 at 1200 cfm and 67°F (19°C) ewb (entering wet bulb) will provide a total capacity of 34,200 Btuh and a SHC of 26,300 Btuh. Calculate SHC correction, if required, using Note 4 under Cooling Capacities tables.

Select heating capacity of unit to provide design condition requirement.

In the Heating Capacities and Efficiencies table, note that the unit 036090 (208/230 VAC) will provide 74,000 Btuh with an input of 90,000 Btuh in high stage and will provide 48,000 Btuh of heating in low stage.

Determine fan speed and power requirements at design conditions.

Before entering the air delivery tables, calculate the total static pressure required. From the given example, the Wet Coil Pressure Drop Table, and the Filter Pressure Drop Table:

External Static Pressure	0.100 IN. W.C
Filter	0.06 IN. W.C
Wet Coil Pressure Drop	0.06 IN. W.C
Total Static Pressure	0.220 IN. W.C

Enter the table for Dry Coil Air Delivery—Horizontal and Downflow Discharge. At .22 IN. W.C. ESP, the closest speed to 1200 CFM is speed 6, which delivers 1246 CFM at .2 in ESP.

Select unit that corresponds to power source available.

The Electrical Data Table shows that the unit is designed to operate at 208-1-60.

Performance Data

024 High Cool

EVAPORATOR AIR		CONDENSER ENTERING AIR TEMPERATURES °F (°C)																	
		75 (23.9)			85 (29.4)			95 (35)			105 (40.6)			115 (46.1)			125 (51.7)		
CFM	EWB	Capacity MBtuh		Total Sys KW	Capacity MBtuh		Total Sys KW	Capacity MBtuh		Total Sys KW	Capacity MBtuh		Total Sys KW	Capacity MBtuh		Total Sys KW	Capacity MBtuh		Total Sys KW
		Total	Sens		Total	Sens		Total	Sens		Total	Sens		Total	Sens		Total	Sens	
700	57 (13.8)	21.10	21.10	1.50	20.41	20.41	1.65	18.57	18.57	1.84	17.66	17.66	2.07	16.33	16.33	2.28	15.32	15.32	2.55
	62 (16.6)	21.92	21.02	1.50	20.98	20.60	1.65	19.10	18.76	1.84	18.15	17.82	2.07	16.78	16.45	2.28	15.74	15.05	2.55
	63* (17.2)	22.36	16.96	1.50	21.39	16.49	1.65	19.29	15.42	1.84	18.12	15.26	2.07	16.57	14.49	2.28	15.23	14.03	2.55
	67 (19.4)	24.04	17.66	1.52	23.00	17.18	1.67	20.72	16.06	1.86	19.48	15.90	2.07	17.82	15.09	2.28	16.37	14.61	2.55
	72 (22.2)	26.20	14.13	1.53	25.07	13.57	1.69	22.65	12.64	1.88	21.23	12.40	2.09	19.43	11.62	2.30	17.84	11.11	2.57
855	57 (13.8)	23.65	23.65	1.55	22.87	22.87	1.70	20.81	20.81	1.89	19.79	19.79	2.12	18.30	18.27	2.33	17.17	16.71	2.60
	62 (16.6)	23.91	23.34	1.55	22.87	22.87	1.70	20.83	20.83	1.89	19.79	19.79	2.12	18.30	18.27	2.33	17.17	16.71	2.60
	63* (17.2)	24.17	18.83	1.55	23.12	18.31	1.70	20.85	17.12	1.89	19.58	16.95	2.12	17.92	16.09	2.33	16.46	15.58	2.60
	67 (19.4)	25.98	19.61	1.57	24.86	19.08	1.72	22.40	17.83	1.91	21.06	17.65	2.12	19.26	16.76	2.33	17.70	16.23	2.60
	72 (22.2)	28.32	15.69	1.58	27.10	15.07	1.74	24.48	14.03	1.93	22.95	13.77	2.14	21.00	12.91	2.35	19.29	12.33	2.62
900	57 (13.8)	23.89	23.65	1.56	23.12	22.87	1.72	21.03	20.81	1.91	20.00	19.79	2.13	18.49	18.27	2.34	17.35	16.71	2.61
	62 (16.6)	24.16	23.59	1.56	23.12	22.87	1.72	21.05	20.83	1.91	20.00	19.79	2.13	18.49	18.27	2.34	17.35	16.71	2.61
	63* (17.2)	24.42	18.83	1.56	23.37	18.31	1.72	21.07	17.12	1.91	19.79	16.95	2.13	18.10	16.09	2.34	16.63	15.58	2.61
	67 (19.4)	26.26	19.61	1.58	25.13	19.08	1.73	22.64	17.83	1.92	21.28	17.65	2.13	19.47	16.76	2.34	17.88	16.23	2.61
	72 (22.2)	28.62	15.69	1.60	27.39	15.07	1.75	24.74	14.03	1.94	23.19	13.77	2.16	21.22	12.91	2.37	19.49	12.33	2.64

See Legend and Notes on page 19.

024 High Heat

INDOOR AIR		OUTDOOR COIL ENTERING AIR TEMPERATURES °F (°C)																							
		-10°F (-23.3°C)			0°F (-17.8°C)			10°F (-12.2°C)			20°F (-6.7°C)			30°F (-1.1°C)			40°F (4.4°C)			50°F (8.3°C)			60°F (15.6°C)		
EDB	CFM	Capacity (Mbtuh)		Total Sys kW	Capacity (Mbtuh)		Total Sys kW	Capacity (Mbtuh)		Total Sys kW	Capacity (Mbtuh)		Total Sys kW	Capacity (Mbtuh)		Total Sys kW	Capacity (Mbtuh)		Total Sys kW	Capacity (Mbtuh)		Total Sys kW	Capacity (Mbtuh)		Total Sys kW
		Total	Integ		Total	Integ		Total	Integ		Total	Integ		Total	Integ		Total	Integ		Total	Integ		Total	Integ	
65°F (18.3°C)	700	6.0	5.6	1.34	8.0	7.3	1.39	10.6	9.7	1.45	13.5	12.3	1.50	16.9	14.8	1.56	20.6	20.6	1.65	25.2	25.2	1.74	27.8	27.8	1.87
	855	6.1	5.6	1.39	8.1	7.4	1.43	10.7	9.8	1.49	13.7	12.4	1.53	17.1	15.0	1.59	20.8	20.8	1.67	25.4	25.4	1.75	28.1	28.1	1.87
	900	6.2	5.7	1.37	8.1	7.5	1.41	10.8	9.9	1.46	13.7	12.4	1.50	17.2	15.0	1.56	20.8	20.8	1.63	25.7	25.7	1.71	28.2	28.2	1.82
70°F (21.1°C)	700	5.9	5.4	1.41	7.8	7.1	1.46	10.3	9.5	1.52	13.2	11.9	1.57	16.5	14.4	1.64	20.0	20.0	1.72	24.5	24.5	1.82	27.1	27.1	1.95
	855	6.0	5.5	1.45	7.9	7.2	1.49	10.4	9.6	1.55	13.3	12.3	1.60	16.7	15.1	1.66	20.2	20.2	1.74	24.8	24.3	1.83	27.4	27.4	1.94
	900	6.0	5.5	1.42	7.9	7.3	1.47	10.5	9.6	1.52	13.4	12.1	1.57	16.7	14.6	1.62	20.3	20.3	1.70	25.0	25.0	1.78	27.4	27.4	1.89
75°F (23.9°C)	700	5.8	5.3	1.47	7.6	7.0	1.52	10.1	9.3	1.59	12.9	11.7	1.64	16.3	14.3	1.71	19.8	19.8	1.80	24.2	24.2	1.90	26.8	26.8	2.04
	855	5.8	5.4	1.51	7.7	7.1	1.55	10.2	9.4	1.61	13.1	11.8	1.66	16.5	14.4	1.72	20.0	20.0	1.81	24.5	24.5	1.90	27.1	27.1	2.02
	900	5.9	5.4	1.48	7.7	7.1	1.52	10.3	9.4	1.58	13.1	11.9	1.63	16.5	14.5	1.68	20.1	20.1	1.76	24.8	24.8	1.85	27.1	27.1	1.97

See Legend and Notes on page 19.

Manufacturer reserves the right to change, at any time, specifications and designs without notice and without obligations.

Performance Data (Continued)

024 Low Cool

EVAPORATOR AIR		CONDENSER ENTERING AIR TEMPERATURES °F (°C)																	
		75 (23.9)			85 (29.4)			95 (35)			105 (40.6)			115 (46.1)			125 (51.7)		
CFM	EWB	Capacity MBtuh		Total Sys KW	Capacity MBtuh		Total Sys KW	Capacity MBtuh		Total Sys KW	Capacity MBtuh		Total Sys KW	Capacity MBtuh		Total Sys KW	Capacity MBtuh		Total Sys KW
		Total	Sens		Total	Sens		Total	Sens		Total	Sens		Total	Sens		Total	Sens	
525	57 (13.8)	16.08	16.08	0.93	14.71	14.71	1.16	13.49	13.49	1.33	12.46	12.46	1.45	11.18	11.18	1.65	10.13	10.13	1.86
	62 (16.6)	16.67	15.41	0.93	15.09	13.95	1.16	13.85	13.85	1.33	12.79	12.79	1.45	11.47	11.47	1.65	10.39	10.39	1.86
	63* (17.2)	17.00	12.56	0.93	15.39	11.72	1.16	13.98	11.48	1.33	12.76	11.12	1.45	11.32	10.38	1.65	10.05	8.97	1.86
	67 (19.4)	18.28	13.08	0.94	16.55	12.21	1.17	15.02	11.96	1.35	13.72	11.58	1.45	12.17	11.09	1.65	10.80	9.34	1.86
	72 (22.2)	19.92	10.46	0.95	18.03	9.64	1.18	16.42	9.41	1.36	14.95	9.04	1.47	13.27	8.54	1.66	11.77	7.01	1.88
675	57 (13.8)	17.82	17.82	0.98	16.31	16.31	1.21	14.95	14.95	1.38	13.81	13.81	1.50	12.39	12.39	1.69	11.23	11.23	1.90
	62 (16.6)	18.02	18.02	0.98	16.31	16.31	1.21	14.97	14.97	1.38	13.81	13.81	1.50	12.39	12.39	1.69	11.23	11.23	1.90
	63* (17.2)	18.21	14.68	0.98	16.49	13.70	1.21	14.98	13.42	1.38	13.67	13.00	1.50	12.13	12.13	1.69	10.76	10.48	1.90
	67 (19.4)	19.58	15.29	0.99	17.73	14.27	1.22	16.09	13.98	1.39	14.70	13.54	1.50	13.04	12.96	1.69	11.57	10.92	1.90
	72 (22.2)	21.34	12.23	1.00	19.32	11.27	1.23	17.59	11.00	1.41	16.02	10.56	1.51	14.22	9.98	1.71	12.61	8.19	1.92
700	57 (13.8)	17.93	17.19	0.98	16.41	15.81	1.21	15.04	14.81	1.39	13.90	13.61	1.51	12.46	12.21	1.70	11.29	11.18	1.91
	62 (16.6)	18.12	17.38	0.98	16.41	15.81	1.21	15.05	14.82	1.39	13.90	13.61	1.51	12.46	12.21	1.70	11.29	11.18	1.91
	63* (17.2)	18.32	14.15	0.98	16.58	13.28	1.21	15.07	13.29	1.39	13.75	12.81	1.51	12.20	11.95	1.70	10.83	10.44	1.91
	67 (19.4)	19.70	14.74	0.99	17.83	13.84	1.23	16.19	13.84	1.40	14.78	13.34	1.51	13.12	12.23	1.70	11.64	10.87	1.91
	72 (22.2)	21.47	11.80	1.00	19.44	10.93	1.24	17.69	10.89	1.42	16.11	10.41	1.52	14.30	9.83	1.72	12.69	8.15	1.93

See Legend and Notes on page 19.

024 Low Heat

INDOOR AIR		OUTDOOR COIL ENTERING AIR TEMPERATURES °F (°C)																				
		0 (-17.8)			10 (-12.2)			20 (-6.7)			30 (-1.1)			40 (4.4)			50 (10)			60 (15.6)		
EDB	CFM	Capacity MBtuh		Total Sys KW	Capacity MBtuh		Total Sys KW	Capacity MBtuh		Total Sys KW	Capacity MBtuh		Total Sys KW	Capacity MBtuh		Total Sys KW	Capacity MBtuh		Total Sys KW	Capacity MBtuh		Total Sys KW
		Total	Integ		Total	Integ		Total	Integ		Total	Integ		Total	Integ		Total	Integ		Total	Integ	
65°F (18.3°C)	525	4.9	4.5	0.99	7.4	6.8	1.04	9.3	8.4	1.11	11.8	10.3	1.12	14.3	14.3	1.19	17.2	17.2	1.24	20.3	20.3	1.31
	675	4.9	4.6	0.99	7.5	6.9	1.03	9.4	8.5	1.09	11.9	10.5	1.10	14.5	14.5	1.15	17.4	17.4	1.20	20.6	20.6	1.25
	700	5.0	4.6	0.97	7.5	6.9	1.00	9.4	8.5	1.06	12.0	10.5	1.07	14.5	14.5	1.12	17.6	17.6	1.16	20.6	20.6	1.22
70°F (21.1°C)	525	4.8	4.4	1.04	7.2	6.6	1.09	9.0	8.2	1.16	11.5	10.1	1.18	14.0	14.0	1.24	16.8	16.8	1.30	19.8	19.8	1.37
	675	4.8	4.4	1.03	7.3	6.7	1.07	9.1	8.4	1.13	11.6	10.5	1.15	14.1	14.1	1.20	16.9	16.9	1.25	20.0	20.0	1.31
	700	4.8	4.5	1.01	7.3	6.7	1.04	9.2	8.3	1.10	11.7	10.2	1.11	14.1	14.1	1.17	17.1	17.1	1.21	20.0	20.0	1.27
75°F (23.9°C)	525	4.7	4.3	1.09	7.0	6.5	1.14	8.8	8.0	1.22	11.4	10.0	1.23	13.8	13.8	1.30	16.6	16.6	1.36	19.6	19.6	1.43
	675	4.7	4.3	1.07	7.1	6.6	1.11	9.0	8.1	1.18	11.5	10.1	1.19	14.0	14.0	1.25	16.8	16.8	1.29	19.8	19.8	1.36
	700	4.7	4.4	1.05	7.2	6.6	1.08	9.0	8.1	1.15	11.5	10.1	1.16	14.0	14.0	1.21	16.9	16.9	1.26	19.8	19.8	1.32

See Legend and Notes on page 19.

Manufacturer reserves the right to change, at any time, specifications and designs without notice and without obligations.

Performance Data (Continued)

036 High Cool

EVAPORATOR AIR		CONDENSER ENTERING AIR TEMPERATURES °F (°C)																	
		75 (23.9)			85 (29.4)			95 (35)			105 (40.6)			115 (46.1)			125 (51.7)		
CFM	EWB	Capacity MBtuh		Total Sys KW	Capacity MBtuh		Total Sys KW	Capacity MBtuh		Total Sys KW	Capacity MBtuh		Total Sys KW	Capacity MBtuh		Total Sys KW	Capacity MBtuh		Total Sys KW
		Total	Sens		Total	Sens		Total	Sens		Total	Sens		Total	Sens		Total	Sens	
1050	57 (13.8)	32.95	32.95	2.22	31.81	31.81	2.44	30.30	30.30	2.71	29.13	29.13	3.05	26.03	26.03	3.36	24.36	24.36	3.75
	62 (16.6)	34.23	32.23	2.22	32.68	31.44	2.44	31.17	29.74	2.71	29.93	27.46	3.05	26.75	25.38	3.36	25.03	23.21	3.75
	63* (17.2)	34.91	26.00	2.22	33.34	25.15	2.44	31.48	24.30	2.71	29.88	23.33	3.05	26.42	22.36	3.36	24.22	21.63	3.75
	67 (19.4)	37.53	27.09	2.24	35.84	26.20	2.46	33.82	25.31	2.74	32.12	24.30	3.05	28.40	23.29	3.36	26.04	22.53	3.75
	72 (22.2)	40.91	21.67	2.26	39.07	20.70	2.49	36.96	19.92	2.77	35.02	18.95	3.08	30.96	17.93	3.39	28.38	17.12	3.78
1200	57 (13.8)	34.55	34.55	2.26	33.35	32.94	2.49	31.77	30.90	2.76	30.54	28.53	3.10	27.29	26.37	3.40	25.54	24.11	3.79
	62 (16.6)	34.93	33.49	2.26	33.35	32.66	2.49	31.81	30.90	2.76	30.54	28.53	3.10	27.29	26.37	3.40	25.54	24.11	3.79
	63* (17.2)	35.30	27.02	2.26	33.71	26.13	2.49	31.84	25.25	2.76	30.22	24.24	3.10	26.72	23.23	3.40	24.49	22.47	3.79
	67 (19.4)	37.96	28.14	2.29	36.25	27.22	2.51	34.20	26.30	2.79	32.49	25.25	3.10	28.73	24.20	3.40	26.33	23.41	3.79
	72 (22.2)	41.38	22.51	2.31	39.51	21.50	2.54	37.38	20.70	2.82	35.41	19.69	3.13	31.31	18.63	3.44	28.70	17.79	3.83
1350	57 (13.8)	35.75	35.75	2.31	34.52	34.52	2.53	32.88	32.88	2.81	31.61	30.49	3.14	28.25	28.19	3.45	26.44	25.77	3.84
	62 (16.6)	36.15	36.15	2.31	34.52	34.52	2.53	32.92	32.92	2.81	31.61	30.49	3.14	28.25	28.19	3.45	26.44	25.77	3.84
	63* (17.2)	36.54	28.87	2.31	34.89	27.93	2.53	32.95	26.98	2.81	31.27	25.90	3.14	27.65	24.83	3.45	25.35	24.02	3.84
	67 (19.4)	39.29	30.08	2.34	37.52	29.09	2.56	35.40	28.11	2.84	33.63	26.98	3.14	29.73	25.86	3.45	27.26	25.02	3.84
	72 (22.2)	42.83	24.06	2.36	40.90	22.98	2.58	38.69	22.12	2.87	36.65	21.05	3.18	32.41	19.91	3.49	29.71	19.01	3.88

See Legend and Notes on page 19.

036 High Heat

INDOOR AIR		OUTDOOR COIL ENTERING AIR TEMPERATURES °F (°C)																							
		-10°F (-23.3°C)			0°F (-17.8°C)			10°F (-12.2°C)			20°F (-6.7°C)			30°F (-1.1°C)			40°F (4.4°C)			50°F (8.3°C)			60°F (15.6°C)		
EDB	CFM	Capacity (Mbtuh)		Total Sys kW	Capacity (Mbtuh)		Total Sys kW	Capacity (Mbtuh)		Total Sys kW	Capacity (Mbtuh)		Total Sys kW	Capacity (Mbtuh)		Total Sys kW	Capacity (Mbtuh)		Total Sys kW	Capacity (Mbtuh)		Total Sys kW	Capacity (Mbtuh)		Total Sys kW
		Total	Integ		Total	Integ		Total	Integ		Total	Integ		Total	Integ		Total	Integ		Total	Integ		Total	Integ	
65°F (18.3°C)	1050	9.1	8.4	2.01	12.6	11.6	2.08	16.1	14.8	2.16	21.0	19.0	2.24	25.4	22.3	2.32	30.6	30.6	2.44	36.5	36.5	2.58	43.1	43.1	2.81
	1200	9.2	8.5	2.06	12.8	11.7	2.12	16.3	15.0	2.20	21.3	19.2	2.27	25.7	22.5	2.36	30.9	30.9	2.47	36.8	36.8	2.60	43.6	43.6	2.82
	1350	9.4	8.6	2.11	12.9	11.9	2.17	16.5	15.1	2.25	21.4	19.4	2.32	25.8	22.6	2.39	31.1	31.1	2.50	37.2	37.2	2.62	43.7	43.7	2.83
70°F (21.1°C)	1050	8.9	8.2	2.10	12.3	11.3	2.17	15.7	14.4	2.26	20.5	18.5	2.34	24.7	21.7	2.43	29.8	29.8	2.55	35.5	35.5	2.70	42.0	42.0	2.94
	1200	9.0	8.3	2.15	12.4	11.4	2.21	15.9	14.6	2.29	20.7	18.7	2.37	25.0	21.9	2.45	30.1	30.1	2.57	35.9	35.9	2.71	42.4	42.4	2.93
	1350	9.1	8.4	2.19	12.6	11.6	2.26	16.0	14.7	2.33	20.9	18.9	2.41	25.2	22.1	2.49	30.3	30.3	2.60	36.2	36.2	2.73	42.6	42.6	2.94
75°F (23.9°C)	1050	8.7	8.0	2.19	12.0	11.1	2.27	15.4	14.2	2.35	20.1	18.2	2.44	24.5	21.5	2.53	29.5	29.5	2.66	35.1	35.1	2.81	41.6	41.6	3.06
	1200	8.8	8.1	2.23	12.2	11.2	2.30	15.6	14.3	2.38	20.3	18.4	2.46	24.8	21.7	2.55	29.8	29.8	2.67	35.5	35.5	2.81	42.0	42.0	3.05
	1350	9.0	8.2	2.28	12.3	11.3	2.34	15.7	14.5	2.42	20.4	18.5	2.50	24.9	21.8	2.58	30.0	30.0	2.70	35.9	35.9	2.83	42.2	42.2	3.05

See Legend and Notes on page 19.

Manufacturer reserves the right to change, at any time, specifications and designs without notice and without obligations.

Performance Data (Continued)

036 Low Cool

EVAPORATOR AIR		CONDENSER ENTERING AIR TEMPERATURES °F (°C)																	
		75 (23.9)			85 (29.4)			95 (35)			105 (40.6)			115 (46.1)			125 (51.7)		
CFM	EWB	Capacity MBtuh		Total Sys KW	Capacity MBtuh		Total Sys KW	Capacity MBtuh		Total Sys KW	Capacity MBtuh		Total Sys KW	Capacity MBtuh		Total Sys KW	Capacity MBtuh		Total Sys KW
		Total	Sens		Total	Sens		Total	Sens		Total	Sens		Total	Sens		Total	Sens	
775	57 (13.8)	25.00	25.00	1.39	22.88	22.88	1.73	20.98	20.98	1.98	19.02	19.02	2.16	16.90	16.90	2.44	15.00	15.00	2.75
	62 (16.6)	25.98	24.89	1.39	23.51	23.09	1.73	21.58	21.58	1.98	19.54	19.54	2.16	17.36	17.36	2.44	15.41	15.41	2.75
	63* (17.2)	26.49	20.08	1.39	23.98	18.74	1.73	21.79	17.02	1.98	19.51	15.68	2.16	17.15	14.15	2.44	14.91	12.70	2.75
	67 (19.4)	28.49	20.92	1.40	25.79	19.52	1.74	23.41	17.73	2.00	20.98	16.33	2.16	18.44	14.74	2.44	16.03	13.23	2.75
	72 (22.2)	31.05	16.73	1.42	28.11	15.42	1.76	25.59	13.95	2.02	22.87	12.74	2.18	20.10	11.35	2.47	17.48	9.92	2.78
900	57 (13.8)	26.64	26.64	1.43	24.38	24.38	1.77	22.35	21.99	2.02	20.26	19.49	2.20	18.00	16.96	2.48	15.98	14.38	2.79
	62 (16.6)	26.93	26.28	1.43	24.38	24.38	1.77	22.37	21.99	2.02	20.26	19.49	2.20	18.00	16.96	2.48	15.98	14.38	2.79
	63 (17.2)	27.23	21.20	1.43	24.65	19.79	1.77	22.40	17.97	2.02	20.05	16.56	2.20	17.62	14.94	2.48	15.32	13.41	2.79
	67 (19.4)	29.28	22.08	1.44	26.50	20.61	1.78	24.06	18.72	2.04	21.56	17.25	2.20	18.95	15.56	2.48	16.48	13.96	2.79
	72 (22.2)	31.91	17.67	1.46	28.89	16.28	1.80	26.29	14.73	2.06	23.50	13.45	2.22	20.65	11.98	2.51	17.96	10.47	2.82
1025	57 (13.8)	27.91	27.91	1.47	25.55	25.55	1.81	23.42	23.42	2.06	21.23	21.08	2.24	18.86	18.35	2.52	16.75	15.56	2.83
	62 (16.6)	28.22	28.22	1.47	25.55	25.55	1.81	23.44	23.44	2.06	21.23	21.08	2.24	18.86	18.35	2.52	16.75	15.56	2.83
	63* (17.2)	28.53	22.94	1.47	25.82	21.41	1.81	23.47	19.44	2.06	21.01	17.91	2.24	18.46	16.16	2.52	16.06	14.50	2.83
	67 (19.4)	30.67	23.89	1.48	27.77	22.30	1.82	25.21	20.25	2.08	22.59	18.66	2.24	19.85	16.84	2.52	17.26	15.11	2.83
	72 (22.2)	33.43	19.11	1.50	30.27	17.62	1.84	27.55	15.94	2.10	24.62	14.55	2.26	21.64	12.97	2.55	18.82	11.33	2.86

See Legend and Notes on page 19.

036 Low Heat

INDOOR AIR		OUTDOOR COIL ENTERING AIR TEMPERATURES °F (°C)																				
		0 (-17.8)			10 (-12.2)			20 (-6.7)			30 (-1.1)			40 (4.4)			50 (10)			60 (15.6)		
EDB	CFM	Capacity MBtuh		Total Sys KW	Capacity MBtuh		Total Sys KW	Capacity MBtuh		Total Sys KW	Capacity MBtuh		Total Sys KW	Capacity MBtuh		Total Sys KW	Capacity MBtuh		Total Sys KW	Capacity MBtuh		Total Sys KW
		Total	Integ		Total	Integ		Total	Integ		Total	Integ		Total	Integ		Total	Integ		Total	Integ	
65°F (18.3°C)	775	6.3	5.8	1.43	9.1	8.4	1.49	14.1	12.7	1.54	16.9	14.8	1.61	20.6	20.6	1.69	24.8	24.8	1.79	29.8	29.8	1.95
	900	6.4	5.9	1.49	9.2	8.5	1.54	14.2	12.9	1.59	17.0	14.9	1.65	20.8	20.8	1.73	25.1	25.1	1.82	30.1	30.1	1.97
	1025	6.5	6.0	1.54	9.4	8.6	1.60	14.3	13.0	1.64	17.2	15.1	1.70	21.0	21.0	1.77	25.4	25.4	1.86	30.2	30.2	2.01
70°F (21.1°C)	775	6.2	5.7	1.50	8.9	8.2	1.56	13.7	12.4	1.62	16.4	14.4	1.68	20.1	20.1	1.77	24.2	24.2	1.87	29.0	29.0	2.04
	900	6.2	5.7	1.55	9.0	8.3	1.61	13.8	12.5	1.66	16.6	14.5	1.72	20.3	20.3	1.80	24.4	24.0	1.90	29.3	29.3	2.06
	1025	6.4	5.9	1.60	9.1	8.4	1.66	14.0	12.6	1.71	16.7	14.7	1.76	20.4	20.4	1.84	24.7	24.7	1.93	29.4	29.4	2.08
75°F (23.9°C)	775	6.0	5.5	1.57	8.7	8.0	1.63	13.4	12.1	1.69	16.3	14.2	1.75	19.9	19.9	1.84	23.9	23.9	1.95	28.7	28.7	2.12
	900	6.1	5.6	1.61	8.8	8.1	1.67	13.6	12.3	1.73	16.4	14.4	1.79	20.1	20.1	1.87	24.2	24.2	1.97	29.0	29.0	2.14
	1025	6.2	5.7	1.66	8.9	8.2	1.72	13.7	12.4	1.77	16.6	14.5	1.83	20.2	20.2	1.91	24.4	24.4	2.00	29.1	29.1	2.16

See Legend and Notes on page 19.

Manufacturer reserves the right to change, at any time, specifications and designs without notice and without obligations.

Performance Data (Continued)

048 High Cool

EVAPORATOR AIR		CONDENSER ENTERING AIR TEMPERATURES °F (°C)																	
		75 (23.9)			85 (29.4)			95 (35)			105 (40.5)			115 (46.1)			125 (51.7)		
CFM	EWB	Capacity MBtuh		Total Sys	Capacity MBtuh		Total Sys	Capacity MBtuh		Total Sys	Capacity MBtuh		Total Sys	Capacity MBtuh		Total Sys	Capacity MBtuh		Total Sys
		Total	Sens	KW	Total	Sens	KW	Total	Sens	KW	Total	Sens	KW	Total	Sens	KW	Total	Sens	KW
1400	57 (13.8)	46.09	46.09	3.16	44.33	44.33	3.47	41.64	41.64	3.87	39.19	39.19	4.34	36.41	36.41	4.78	33.05	33.05	5.34
	62 (16.6)	47.88	43.99	3.16	45.55	42.90	3.47	42.84	40.59	3.87	40.27	37.47	4.34	37.41	34.64	4.78	33.96	31.67	5.34
	63* (17.2)	48.84	35.48	3.16	46.46	34.32	3.47	43.26	33.16	3.87	40.19	31.84	4.34	36.95	30.51	4.78	32.85	29.51	5.34
	67 (19.4)	52.51	36.96	3.19	49.96	35.75	3.51	46.47	34.54	3.91	43.22	33.16	4.34	39.73	31.78	4.78	35.32	30.74	5.34
	72 (22.2)	57.24	29.57	3.22	54.45	28.25	3.54	50.79	27.19	3.95	47.11	25.87	4.39	43.31	24.47	4.83	38.50	23.37	5.39
1600	57 (13.8)	48.33	47.62	3.22	46.48	44.95	3.54	43.66	42.17	3.93	41.09	38.93	4.41	38.18	35.99	4.84	34.65	32.90	5.40
	62 (16.6)	48.86	45.70	3.22	46.48	44.58	3.54	43.71	42.17	3.93	41.09	38.93	4.41	38.18	35.99	4.84	34.65	32.90	5.40
	63* (17.2)	49.39	36.87	3.22	46.99	35.66	3.54	43.76	34.45	3.93	40.65	33.08	4.41	37.37	31.70	4.84	33.22	30.66	5.40
	67 (19.4)	53.11	38.40	3.26	50.53	37.15	3.57	47.00	35.89	3.97	43.71	34.45	4.41	40.19	33.02	4.84	35.72	31.94	5.40
	72 (22.2)	57.89	30.72	3.29	55.07	29.35	3.61	51.37	28.25	4.01	47.64	26.87	4.45	43.80	25.42	4.89	38.93	24.28	5.45
1800	57 (13.8)	50.02	50.02	3.29	48.11	48.04	3.60	45.19	45.07	3.99	42.53	41.61	4.47	39.51	38.46	4.91	35.86	35.16	5.46
	62 (16.6)	50.57	49.35	3.29	48.11	47.64	3.60	45.24	45.07	3.99	42.53	41.61	4.47	39.51	38.46	4.91	35.86	35.16	5.46
	63* (17.2)	51.12	39.40	3.29	48.63	38.11	3.60	45.29	36.82	3.99	42.07	35.35	4.47	38.68	33.88	4.91	34.38	32.77	5.46
	67 (19.4)	54.97	41.04	3.32	52.29	39.70	3.64	48.65	38.36	4.03	45.24	36.82	4.47	41.59	35.29	4.91	36.97	34.14	5.46
	72 (22.2)	59.92	32.83	3.35	57.00	31.36	3.67	53.17	30.19	4.07	49.31	28.72	4.51	45.33	27.17	4.96	40.30	25.94	5.52

See Legend and Notes on page 19.

048 High Heat

INDOOR AIR		OUTDOOR COIL ENTERING AIR TEMPERATURES °F (°C)																							
		-10°F (-23.3°C)			0°F (-17.8°C)			10°F (-12.2°C)			20°F (-6.7°C)			30°F (-1.1°C)			40°F (4.4°C)			50°F (8.3°C)			60°F (15.6°C)		
EDB	CFM	Capacity (Mbtuh)		Total Sys	Capacity (Mbtuh)		Total Sys	Capacity (Mbtuh)		Total Sys	Capacity (Mbtuh)		Total Sys	Capacity (Mbtuh)		Total Sys	Capacity (Mbtuh)		Total Sys	Capacity (Mbtuh)		Total Sys	Capacity (Mbtuh)		Total Sys
		Total	Integ	kW	Total	Integ	kW	Total	Integ	kW	Total	Integ	kW	Total	Integ	kW	Total	Integ	kW	Total	Integ	kW	Total	Integ	kW
65°F (18.3°C)	1400	13.8	12.7	2.80	18.7	17.2	2.90	24.3	22.4	3.01	28.9	26.2	3.12	34.4	30.2	3.24	40.1	40.1	3.40	47.7	47.7	3.60	54.4	54.4	3.92
	1600	14.0	12.8	2.86	18.9	17.4	2.95	24.6	22.6	3.06	29.2	26.4	3.16	34.8	30.5	3.27	40.5	40.5	3.43	48.2	48.2	3.61	54.9	54.9	3.91
	1800	14.2	13.0	2.93	19.1	17.6	3.01	24.8	22.8	3.11	29.4	26.6	3.21	35.0	30.7	3.32	40.8	40.8	3.46	48.7	48.7	3.64	55.1	55.1	3.92
70°F (21.1°C)	1400	13.4	12.4	2.93	18.2	16.7	3.03	23.7	21.8	3.15	28.2	25.5	3.26	33.5	29.4	3.38	39.1	39.1	3.55	46.5	46.5	3.75	52.9	52.9	4.09
	1600	13.6	12.5	2.98	18.4	16.9	3.08	23.9	22.0	3.19	28.5	25.8	3.29	33.9	29.7	3.41	39.5	39.5	3.57	47.0	47.0	3.76	53.5	53.5	4.08
	1800	13.8	12.7	3.04	18.6	17.1	3.13	24.2	22.2	3.23	28.7	25.9	3.33	34.1	29.9	3.45	39.7	39.7	3.60	47.5	47.5	3.78	53.7	53.7	4.08
75°F (23.9°C)	1400	13.2	12.1	3.06	17.8	16.4	3.16	23.2	21.3	3.28	27.6	25.0	3.40	33.2	29.1	3.53	38.7	38.7	3.71	46.0	46.0	3.91	52.4	52.4	4.26
	1600	13.3	12.3	3.10	18.0	16.6	3.20	23.5	21.6	3.31	27.9	25.2	3.42	33.5	29.4	3.54	39.1	39.1	3.71	46.5	46.5	3.91	52.9	52.9	4.24
	1800	13.5	12.5	3.15	18.2	16.8	3.25	23.7	21.8	3.36	28.1	25.4	3.46	33.8	29.6	3.58	39.3	39.3	3.74	47.0	47.0	3.92	53.2	53.2	4.23

See Legend and Notes on page 19.

Manufacturer reserves the right to change, at any time, specifications and designs without notice and without obligations.

Performance Data (Continued)

048 Low Cool

EVAPORATOR AIR		CONDENSER ENTERING AIR TEMPERATURES °F (°C)																	
		75 (23.9)			85 (29.4)			95 (35)			105 (40.6)			115 (46.1)			125 (51.7)		
CFM	EWB	Capacity MBtuh		Total Sys KW	Capacity MBtuh		Total Sys KW	Capacity MBtuh		Total Sys KW	Capacity MBtuh		Total Sys KW	Capacity MBtuh		Total Sys KW	Capacity MBtuh		Total Sys KW
		Total	Sens		Total	Sens		Total	Sens		Total	Sens		Total	Sens		Total	Sens	
1050	57 (13.8)	35.20	35.20	1.94	32.22	32.22	2.41	29.53	29.53	2.77	26.78	26.78	3.01	23.79	23.79	3.41	21.12	21.12	3.84
	62 (16.6)	36.57	34.36	1.94	33.11	32.34	2.41	30.38	30.38	2.77	27.52	27.52	3.01	24.44	24.44	3.41	21.70	21.70	3.84
	63* (17.2)	37.30	27.72	1.94	33.76	25.87	2.41	30.68	24.02	2.77	27.47	22.44	3.01	24.14	19.54	3.41	20.99	17.95	3.84
	67 (19.4)	40.10	28.87	1.96	36.31	26.95	2.44	32.96	25.02	2.80	29.53	23.37	3.01	25.96	20.35	3.41	22.57	18.70	3.84
	72 (22.2)	43.71	23.10	1.98	39.57	21.29	2.46	36.02	19.69	2.83	32.19	18.23	3.04	28.30	15.67	3.44	24.60	14.02	3.88
1200	57 (13.8)	36.91	36.91	1.99	33.78	33.78	2.46	30.97	30.55	2.82	28.08	27.44	3.06	24.94	23.04	3.46	22.15	20.01	3.89
	62 (16.6)	37.32	35.70	1.99	33.78	33.60	2.46	31.00	30.55	2.82	28.08	27.44	3.06	24.94	23.04	3.46	22.15	20.01	3.89
	63* (17.2)	37.72	28.80	1.99	34.15	26.88	2.46	31.03	24.96	2.82	27.78	23.31	3.06	24.42	20.30	3.46	21.23	18.65	3.89
	67 (19.4)	40.56	30.00	2.01	36.72	28.00	2.49	33.33	26.00	2.85	29.87	24.28	3.06	26.25	21.14	3.46	22.83	19.43	3.89
	72 (22.2)	44.21	24.00	2.03	40.02	22.12	2.51	36.43	20.46	2.88	32.56	18.94	3.09	28.62	16.28	3.49	24.88	14.57	3.93
1350	57 (13.8)	38.20	38.20	2.04	34.96	34.96	2.51	32.05	32.05	2.87	29.06	29.06	3.11	25.81	24.63	3.51	22.92	21.39	3.94
	62 (16.6)	38.62	38.55	2.04	34.96	34.96	2.51	32.08	32.08	2.87	29.06	29.06	3.11	25.81	24.63	3.51	22.92	21.39	3.94
	63* (17.2)	39.04	30.78	2.04	35.34	28.73	2.51	32.12	26.67	2.87	28.75	24.92	3.11	25.27	21.69	3.51	21.98	19.93	3.94
	67 (19.4)	41.98	32.06	2.06	38.00	29.92	2.53	34.50	27.79	2.90	30.91	25.95	3.11	27.17	22.60	3.51	23.63	20.76	3.94
	72 (22.2)	45.76	25.65	2.08	41.42	23.64	2.56	37.71	21.87	2.92	33.70	20.24	3.14	29.62	17.40	3.54	25.76	15.57	3.97

See Legend and Notes on page 19.

048 Low Heat

Indoor Air		OUTDOOR COIL ENTERING AIR TEMPERATURES °F (°C)																				
		0 (-17.8)			10 (-12.2)			20 (-6.7)			30 (-1.1)			40 (4.4)			50 (10)			60 (15.6)		
EDB	CFM	Capacity MBtuh		Total Sys KW	Capacity MBtuh		Total Sys KW	Capacity MBtuh		Total Sys KW	Capacity MBtuh		Total Sys KW	Capacity MBtuh		Total Sys KW	Capacity MBtuh		Total Sys KW	Capacity MBtuh		Total Sys KW
		Total	Integ		Total	Integ		Total	Integ		Total	Integ		Total	Integ		Total	Integ		Total	Integ	
65 (18.3)	1050	10.5	9.7	2.01	14.4	13.2	2.08	18.6	16.8	2.16	24.3	21.3	2.24	29.2	29.2	2.36	34.6	34.6	2.49	41.1	41.1	2.71
	1200	10.7	9.9	2.06	14.7	13.5	2.13	19.0	17.2	2.20	24.8	21.7	2.28	29.8	29.8	2.39	35.4	35.4	2.51	42.0	42.0	2.72
	1350	10.9	10.0	2.11	14.8	13.7	2.18	19.2	17.3	2.25	25.0	21.9	2.32	30.0	30.0	2.42	35.7	35.7	2.54	42.1	42.1	2.74
70 (21.1)	1050	10.2	9.4	2.10	14.0	12.9	2.18	18.1	16.4	2.25	23.6	20.7	2.34	28.5	28.5	2.46	33.7	33.7	2.60	40.0	40.0	2.83
	1200	10.5	9.6	2.14	14.3	13.1	2.22	18.5	16.7	2.29	24.1	21.1	2.37	29.1	29.1	2.49	34.4	34.4	2.62	40.9	40.9	2.84
	1350	10.6	9.8	2.19	14.5	13.3	2.26	18.7	16.9	2.33	24.3	21.3	2.41	29.2	29.2	2.52	34.8	34.8	2.64	41.0	41.0	2.85
75 (23.9)	1050	9.8	9.0	2.19	13.4	12.4	2.27	17.6	15.9	2.35	22.7	19.9	2.44	28.2	28.2	2.57	33.4	33.4	2.71	39.6	39.6	2.95
	1200	10.0	9.2	2.23	13.7	12.6	2.31	18.0	16.2	2.38	23.2	20.3	2.47	28.8	28.8	2.59	34.1	34.1	2.72	40.5	40.5	2.95
	1350	10.2	9.4	2.27	13.9	12.8	2.35	18.1	16.4	2.42	23.3	20.4	2.50	28.9	28.9	2.61	34.5	34.5	2.74	40.6	40.6	2.96

See Legend and Notes on page 19.

Manufacturer reserves the right to change, at any time, specifications and designs without notice and without obligations.

Performance Data (Continued)

060 High Cool

EVAPORATOR AIR		CONDENSER ENTERING AIR TEMPERATURES °F (°C)																	
		75 (23.9)			85 (29.4)			95 (35)			105 (40.5)			115 (46.1)			125 (51.7)		
CFM	EWB	Capacity MBtuh		Total Sys KW	Capacity MBtuh		Total Sys KW	Capacity MBtuh		Total Sys KW	Capacity MBtuh		Total Sys KW	Capacity MBtuh		Total Sys KW	Capacity MBtuh		Total Sys KW
1600	57 (13.9)	53.75	53.75	3.88	52.16	52.16	4.26	48.99	48.99	4.74	46.10	46.10	5.32	42.08	42.08	5.86	39.90	38.47	6.53
	62 (16.7)	55.92	50.45	3.88	53.68	48.32	4.26	50.47	45.72	4.74	47.44	41.77	5.32	43.31	36.90	5.86	41.06	33.66	6.53
	63* (17.2)	57.06	40.70	3.88	54.77	38.66	4.26	51.00	37.35	4.74	47.38	35.48	5.32	42.80	32.50	5.86	39.74	31.38	6.53
	67 (19.4)	61.36	42.39	3.92	58.89	40.27	4.31	54.78	38.91	4.79	50.95	36.96	5.32	46.02	33.85	5.86	42.73	32.68	6.53
	72 (13.9)	66.88	33.91	3.96	62.99	31.81	4.35	56.35	30.62	4.84	55.53	28.83	5.38	50.16	26.07	5.92	46.58	24.84	6.60
1750	57 (13.9)	57.08	54.76	3.93	55.38	50.76	4.31	52.02	47.62	4.79	48.96	43.51	5.37	44.69	38.43	5.90	42.37	35.07	6.58
	62 (16.7)	57.70	52.55	3.93	55.38	50.34	4.31	52.08	47.62	4.79	48.96	43.51	5.37	44.69	38.43	5.90	42.37	35.07	6.58
	63* (17.2)	58.33	42.39	3.93	55.99	40.27	4.31	52.14	38.91	4.79	48.43	36.96	5.37	43.75	33.85	5.90	40.62	32.68	6.58
	67 (19.4)	62.72	44.16	3.97	60.20	41.95	4.36	56.00	40.53	4.84	52.08	38.50	5.37	47.04	35.26	5.90	43.68	34.05	6.58
	72 (13.9)	68.36	35.33	4.01	65.62	33.14	4.40	61.21	31.90	4.89	56.77	30.03	5.43	51.27	27.15	5.96	47.61	25.87	6.65
2000	57 (13.9)	58.71	58.71	4.01	56.97	55.11	4.39	53.51	51.70	4.87	50.35	47.24	5.45	45.96	41.73	5.98	43.58	38.07	6.66
	62 (16.7)	59.35	57.65	4.01	56.97	54.65	4.39	53.57	51.70	4.87	50.35	47.24	5.45	45.96	41.73	5.98	43.58	38.07	6.66
	63* (17.2)	60.00	46.02	4.01	57.59	43.72	4.39	53.63	42.24	4.87	49.82	40.13	5.45	45.00	36.75	5.98	41.78	35.48	6.66
	67 (19.4)	64.51	47.94	4.05	61.92	45.54	4.44	57.60	44.00	4.92	53.57	41.80	5.45	48.38	38.28	5.98	44.93	36.96	6.66
	72 (13.9)	70.32	38.35	4.09	67.49	35.98	4.48	62.96	34.63	4.97	58.39	32.61	5.51	52.74	29.48	6.04	48.97	28.09	6.73

See Legend and Notes on page 19.

060 High Heat

INDOOR AIR		OUTDOOR COIL ENTERING AIR TEMPERATURES °F (°C)																							
		-10°F (-23.3°C)			0°F (-17.8°C)			10°F (-12.2°C)			20°F (-6.7°C)			30°F (-1.1°C)			40°F (4.4°C)			50°F (8.3°C)			60°F (15.6°C)		
EDB	CFM	Capacity (Mbtuh)		Total Sys kW	Capacity (Mbtuh)		Total Sys kW	Capacity (Mbtuh)		Total Sys kW	Capacity (Mbtuh)		Total Sys kW	Capacity (Mbtuh)		Total Sys kW	Capacity (Mbtuh)		Total Sys kW	Capacity (Mbtuh)		Total Sys kW	Capacity (Mbtuh)		Total Sys kW
		Total	Integ		Total	Integ		Total	Integ		Total	Integ		Total	Integ		Total	Integ		Total	Integ		Total	Integ	
65°F (18.3°C)	1600	17.3	15.9	3.46	22.6	20.8	3.58	29.3	26.9	3.71	36.2	32.7	3.70	43.1	37.7	3.98	50.2	50.2	4.14	59.7	59.7	4.39	68.0	68.0	4.98
	1750	17.5	16.1	3.43	22.8	21.0	3.54	29.6	27.2	3.67	36.6	33.1	3.66	43.5	38.1	3.92	50.7	50.7	4.07	60.3	60.3	4.31	68.7	68.7	4.86
	2000	17.7	16.3	3.52	23.1	21.2	3.62	29.9	27.5	3.74	36.8	33.3	3.73	43.8	38.4	3.98	51.0	51.0	4.12	61.0	61.0	4.35	69.0	69.0	4.88
70°F (21.1°C)	1600	16.8	15.5	3.61	22.0	20.2	3.73	28.5	26.2	3.87	35.2	31.9	3.86	41.9	36.7	4.16	48.9	48.9	4.32	58.2	58.2	4.58	66.2	66.2	5.19
	1750	17.0	15.6	3.57	22.2	20.4	3.69	28.8	26.5	3.82	35.6	32.2	3.81	42.4	37.1	4.08	49.4	49.4	4.24	58.8	58.8	4.48	66.9	66.9	5.06
	2000	17.3	15.9	3.65	22.5	20.7	3.76	29.1	26.8	3.89	35.9	32.5	3.88	42.6	37.4	4.14	49.7	49.7	4.28	59.4	59.4	4.52	67.2	67.2	5.07
75°F (23.9°C)	1600	16.5	15.2	3.77	21.5	19.8	3.89	27.9	25.7	4.04	34.5	31.2	4.03	41.5	36.4	4.33	48.4	48.4	4.50	57.6	57.6	4.77	65.6	65.6	5.41
	1750	16.7	15.3	3.72	21.8	20.0	3.83	28.2	26.0	3.97	34.9	31.6	3.96	42.0	36.7	4.25	48.9	48.9	4.41	58.2	58.2	4.66	66.2	66.2	5.26
	2000	16.9	15.6	3.79	22.0	20.3	3.90	28.5	26.2	4.03	35.2	31.8	4.02	42.2	37.0	4.30	49.2	49.2	4.44	58.8	58.8	4.69	66.5	66.5	5.26

See Legend and Notes on page 19.

Manufacturer reserves the right to change, at any time, specifications and designs without notice and without obligations.

Performance Data (Continued)

060 Low Cool

Evaporator Air		CONDENSER ENTERING AIR TEMPERATURES °F (°C)																	
		75 (23.9)			85 (29.4)			95 (35)			105 (40.6)			115 (46.1)			125 (51.7)		
CFM	EWB	Capacity MBtuh		Total Sys KW	Capacity MBtuh		Total Sys KW	Capacity MBtuh		Total Sys KW	Capacity MBtuh		Total Sys KW	Capacity MBtuh		Total Sys KW	Capacity MBtuh		Total Sys KW
		Total	Sens		Total	Sens		Total	Sens		Total	Sens		Total	Sens		Total	Sens	
1200	57 (13.8)	39.55	39.55	2.32	36.57	36.57	2.89	33.18	33.18	3.32	30.09	30.09	3.61	26.73	26.73	4.08	23.73	23.73	4.60
	62 (16.6)	41.09	38.67	2.32	37.58	36.40	2.89	34.13	34.13	3.32	30.91	30.91	3.61	27.46	27.46	4.08	24.38	24.38	4.60
	63* (17.2)	41.90	31.20	2.32	38.33	29.12	2.89	34.47	27.04	3.32	30.86	25.26	3.61	27.12	23.77	4.08	23.59	22.28	4.60
	67 (19.4)	45.06	32.50	2.35	41.21	30.33	2.92	37.03	28.16	3.35	33.18	26.31	3.61	29.17	24.76	4.08	25.36	23.21	4.60
	72 (22.2)	49.11	26.00	2.37	44.92	23.96	2.95	40.47	22.17	3.38	36.17	20.52	3.64	31.79	19.07	4.12	27.64	17.41	4.64
1400	57 (13.8)	42.33	42.33	2.39	39.15	38.93	2.95	35.51	35.10	3.38	32.20	31.53	3.67	28.61	28.61	4.15	25.40	25.36	4.66
	62 (16.6)	42.80	41.02	2.39	39.15	38.60	2.95	35.55	35.10	3.38	32.20	31.53	3.67	28.61	28.61	4.15	25.40	25.36	4.66
	63* (17.2)	43.26	33.09	2.39	39.57	30.88	2.95	35.59	28.68	3.38	31.86	26.79	3.67	28.00	25.21	4.15	24.35	23.63	4.66
	67 (19.4)	46.52	34.47	2.41	42.55	32.17	2.98	38.23	29.87	3.41	34.26	27.90	3.67	30.11	26.26	4.15	26.18	24.62	4.66
	72 (22.2)	50.71	27.57	2.44	46.38	25.41	3.01	41.78	23.51	3.45	37.34	21.76	3.71	32.82	20.22	4.19	28.54	18.46	4.71
1550	57 (13.8)	43.12	43.12	2.44	39.87	39.87	3.00	36.17	36.17	3.43	32.80	32.80	3.72	29.14	29.14	4.19	25.87	25.87	4.71
	62 (16.6)	43.59	43.59	2.44	39.87	39.87	3.00	36.21	36.21	3.43	32.80	32.80	3.72	29.14	29.14	4.19	25.87	25.87	4.71
	63* (17.2)	44.07	34.80	2.44	40.31	32.48	3.00	36.25	30.16	3.43	32.45	28.17	3.72	28.52	26.52	4.19	24.80	24.80	4.71
	67 (19.4)	47.38	36.25	2.46	43.34	33.84	3.03	38.94	31.42	3.46	34.89	29.35	3.72	30.67	27.62	4.19	26.67	25.89	4.71
	72 (22.2)	51.65	29.00	2.48	47.24	26.73	3.06	42.56	24.73	3.50	38.03	22.89	3.76	33.43	21.27	4.24	29.07	19.42	4.76

See Legend and Notes on page 19.

060 Low Heat

Indoor Air		OUTDOOR COIL ENTERING AIR TEMPERATURES °F (°C)																				
		0 (-17.8)			10 (-12.2)			20 (-6.7)			30 (-1.1)			40 (4.4)			50 (10)			60 (15.6)		
EDB	CFM	Capacity MBtuh		Total Sys KW	Capacity MBtuh		Total Sys KW	Capacity MBtuh		Total Sys KW	Capacity MBtuh		Total Sys KW	Capacity MBtuh		Total Sys KW	Capacity MBtuh		Total Sys KW	Capacity MBtuh		Total Sys KW
		Total	Integ		Total	Integ		Total	Integ		Total	Integ		Total	Integ		Total	Integ		Total	Integ	
65 (18.3)	1200	13.1	12.0	2.23	17.3	15.9	2.32	22.1	20.0	2.59	28.3	24.8	2.50	33.2	33.2	2.69	39.4	39.4	2.78	46.8	46.8	3.03
	1400	13.3	12.3	2.32	17.7	16.3	2.41	22.5	20.4	2.66	28.9	25.4	2.58	33.9	33.9	2.76	40.2	40.2	2.84	47.7	47.7	3.08
	1550	13.5	12.4	2.36	17.8	16.4	2.44	22.7	20.6	2.68	29.1	25.5	2.60	34.1	34.1	2.77	40.6	40.6	2.86	47.9	47.9	3.08
70 (21.1)	1200	12.7	11.7	2.33	16.8	15.5	2.43	21.5	19.5	2.71	27.6	24.2	2.61	32.4	32.4	2.81	38.4	38.4	2.91	45.5	45.5	3.17
	1400	13.0	12.0	2.42	17.2	15.8	2.51	22.0	19.9	2.77	28.2	24.7	2.68	33.0	33.0	2.87	39.2	39.2	2.96	46.5	46.5	3.21
	1550	13.2	12.1	2.46	17.4	16.0	2.54	22.1	20.0	2.79	28.3	24.8	2.71	33.2	33.2	2.88	39.6	39.6	2.97	46.6	46.6	3.20
75 (23.9)	1200	12.2	11.2	2.44	16.2	14.9	2.53	20.9	18.9	2.82	26.5	23.2	2.73	32.0	32.0	2.93	38.0	38.0	3.03	45.1	45.1	3.31
	1400	12.5	11.5	2.52	16.5	15.2	2.61	21.3	19.3	2.88	27.1	23.7	2.79	32.7	32.7	2.99	38.8	38.8	3.08	46.0	46.0	3.34
	1550	12.6	11.6	2.55	16.7	15.3	2.63	21.5	19.4	2.89	27.2	23.8	2.81	32.9	32.9	2.99	39.2	39.2	3.08	46.2	46.2	3.33

Manufacturer reserves the right to change, at any time, specifications and designs without notice and without obligations.

At 75°F (24°C) entering dry bulb-Tennessee Valley Authority (TVA) rating conditions; all others at 80°F (27°C) dry bulb.

LEGEND

BF— Bypass Factor
edb— Entering Dry-Bulb
Ewb— Entering Wet-Bulb
kW — Total Unit Power Input
SHC— Sensible Heat Capacity (1000 Btuh)
TC — Total Capacity (1000 Btuh) (net)
rh—Relative Humidity

COOLING NOTES:

1. Ratings are net; they account for the effects of the evaporator-fan motor power and heat.
2. Direct interpolation is permissible. Do not extrapolate.
3. The following formulas may be used:

$$^{t}ldb = {}^{t}edb - \frac{\text{Sensible capacity (Btuh)}}{1.10 \times \text{CFM}}$$

$$^{t}lwb = \text{Wet-bulb temperature corresponding to enthalpy air leaving evaporator coil } (^{h}lwb)$$

$$^{h}lwb = {}^{h}ewb - \frac{\text{total capacity (Btuh)}}{(4.5 \times \text{CFM})}$$

Where: ^{h}ewb = Enthalpy of air entering evaporator coil

4. The SHC is based on 805 F (26.6°C) edb temperature of air entering evaporator coil. Below 80°F (26.6°C) edb, subtract (corr factor x cfm) from SHC. Above 80° F (26.6°C) edb, add (corr factor x cfm) to SHC.
Correction Factor = 1.10 x (1 + BF) x (edb - 80).
5. Integrated capacity is maximum (instantaneous) capacity less the effect of frost on the outdoor coil and the heat required to defrost it.

Manufacturer reserves the right to change, at any time, specifications and designs without notice and without obligations.

Gas Adjustment

Natural Gas Orifice Sizes and Manifold Pressure
208/230VAC Models

Nameplate Input, High Stage (Btu/hr)		Altitude of Installation (Ft. Above Sea Level) U.S.A. U.S.A.*				
		0 to 2000 [0 to 610]	2001 to 3000* [610 to 914]	3001 to 4000 [915 to 1219]	4001 to 5000 [1220 to 1524]	5001 to 6000 [1524 to 1829]
40000	Orifice No. (Qty)	44 (2)	45 (2)†	48 (2)†	48 (2)†	48 (2)†
	Manifold Press. High / Low (in. W.C.)	3.2 /1.4	3.2 /1.4	3.8 /1.6	3.5 /1.5	3.2 /1.4
60000	Orifice No. (Qty)	44 (3)	45 (3)†	48 (3)†	48 (3)†	48 (3)†
	Manifold Press. High / Low (in. W.C.)	3.2 /1.4	3.2 /1.4	3.8 /1.6	3.5 /1.5	3.2 /1.4
90000	Orifice No. (Qty)	38 (3)	41 (3)†	41 (3)†	42 (3)†	42 (3)†
	Manifold Press. High / Low (in. W.C.)	3.6 /1.6	3.8 /1.6	3.4 /1.5	3.4 /1.5	3.2 /1.4
115000	Orifice No. (Qty)	33 (3)	36 (3)†	36 (3)†	36 (3)†	38 (3)†
	Manifold Press. High / Low (in. W.C.)	3.8 /1.7	3.8 /1.7	3.6 /1.6	3.3 /1.4	3.6 /1.5
127000	Orifice No. (Qty)	31 (3)	31 (3)	33 (3)†	33 (3)†	34 (3)†
	Manifold Press. High / Low (in. W.C.)	3.7 /1.7	3.2 /1.4	3.5 /1.6	3.2 /1.4	3.2 /1.4

*. *In the U.S.A., the input rating for altitudes above 2000 ft (610m) must be reduced by 4% for each 1000 ft (305 m) above sea level.
In Canada, the input rating for altitudes from 2001 to 4500 ft (611 to 1372 m) above sea level must be derated by 10% by an authorized gas conversion station or dealer.
For Canadian Installations from 2000 to 4500 ft, use U.S.A. column 2001 to 3000 ft (610 to 914 m).

†. Orifices available through your distributor.

NOTE: Orifice sizes and manifold pressure settings are based on natural gas with a heating value of 1025 Btu/ft^3 and a specific gravity of .6.

Propane Gas Orifice Sizes and Manifold Pressure
208/230VAC Models

Nameplate Input, High Stage (Btu/hr)		Altitude of Installation (Ft. Above Sea Level) U.S.A.*†				
		0 to 2000 [0 to 610]	2001 to 3000* [610 to 914]	3001 to 4000 [915 to 1219]	4001 to 5000 [1220 to 1524]	5001 to 6000 [1524 to 1829]
40000	Orifice No. (Qty)	55 (2)	56 (2)	56 (2)	56 (2)	56 (2)
	Manifold Press. High / Low (in. W.C.)	10.0/5.0	11.0/6.0	11.0/5.5	11.0/5.0	10.7/4.8
60000	Orifice No. (Qty)	55 (3)	56 (3)	56 (3)	56 (3)	56 (3)
	Manifold Press. High / Low (in. W.C.)	10.0/5.0	11.0/6.0	11.0/5.5	11.0/5.0	10.7/4.8
90000	Orifice No. (Qty)	53 (3)	54 (3)	54 (3)	54 (3)	54 (3)
	Manifold Press. High / Low (in. W.C.)	10.0/5.4	11.0/6.4	11.0/5.9	11.0/5.4	11.0/5.0
115000	Orifice No. (Qty)	51 (3)	52 (3)	52 (3)	53 (3)	53 (3)
	Manifold Press. High / Low (in. W.C.)	10.0/5.4	11.0/5.0	10.6/4.8	11.0/6.1	11.0/5.5
127,000	Orifice No. (Qty)	49 (3)	50 (3)	51 (3)	52 (3)	52 (3)
	Manifold Press. High / Low (in. W.C.)	10.0/5.4	11.0/4.8	11.0/4.9	11.0/5.2	11.0/5.0

*. In the U.S.A., the input rating for altitudes above 2000 ft (610m) must be reduced by 4% for each 1000 ft (305 m) above sea level.
In Canada, the input rating for altitudes from 2001 to 4500 ft (611 to 1372 m) above sea level must be derated by 10% by an authorized gas conversion station or dealer.
For Canadian Installations from 2000 to 4500 ft, use U.S.A. column 2001 to 3000 ft (610 to 914 m).

†. Use Kit No. CPLPCONV013C00 (0-2000 ft [0-610 m] above sea level. Use Kit No. CPLPCONV014C00 (2001-6000 ft [611-1829 m] above sea level.

High Altitude Compensation: Natural Gas
208/230VAC Models

Nameplate Input, High Stage (Btu/hr)	Rated Heating Input (Btu/hr), Natural Gas at Installation Altitude Above Sea Level, U.S.A.*									
	0 to 2000 ft 0 to 610 m		2001 to 3000 ft* 610 to 914 m		3001 to 4000 ft 915 to 1219 m		4001 to 5000 ft 1220 to 1524 m		5001 to 6000 ft 1524 to 1829 m	
	High Stage	Low Stage	High Stage	Low Stage	High Stage	Low Stage	High Stage	Low Stage	High Stage	Low Stage
40000	40000	26000	36000	23400	34400	22300	32800	21300	31200	20300
60000	60000	39000	54000	35100	51600	33500	49200	32000	46800	30400
90000	90000	58500	81000	52700	77400	50300	73800	48000	70200	45600
115000	115000	75000	103500	67500	98900	64500	94300	61500	89700	58500
127000	127000	84500	117000	76100	111800	72700	106600	69300	101400	65900

*. In the U.S.A., the input rating for altitudes above 2000 ft (610m) must be reduced by 4% for each 1000 ft (305 m) above Sea level.
In Canada, the input rating for altitudes from 2001 to 4500 ft (611 to 1372 m) above sea level must be derated by 10% by an authorized gas conversion station or dealer.
For Canadian Installations from 2000 to 4500 ft (610-1372 m), use U.S.A. column 2001 to 3000 ft (611 to 914 m).

High Altitude Compensation: Propane Gas
208/230VAC Models

Nameplate Input, High Stage (Btu/hr)	Rated Heating Input (Btu/hr), LP Gas at Installation Altitude Above Sea Level, U.S.A.*									
	0 to 2000 ft 0 to 610 m		2001 to 3000 ft* 610 to 914 m		3001 to 4000 ft 915 to 1219 m		4001 to 5000 ft 1220 to 1524 m		5001 to 6000 ft 1524 to 1829 m	
	High Stage	Low Stage	High Stage	Low Stage	High Stage	Low Stage	High Stage	Low Stage	High Stage	Low Stage
40000	38000	26000	31700	23400	31700	22300	31700	21300	31200	20300
60000	57000	39000	47500	35100	47500	33500	47500	32000	46800	30400
90000	79000	58500	68900	52700	68900	50300	68600	48000	68600	45600
115000	103000	75000	100400	67500	98900	64500	83000	61500	83000	58500
127000	116000	84500	115500	76100	111800	72700	101300	69300	100400	65900

*. In the U.S.A., the input rating for altitudes above 2000 ft (610m) must be reduced by 4% for each 1000 ft (305 m) above sea level.
In Canada, the input rating for altitudes from 2001 to 4500 ft (611 to 1372 m) above sea level must be derated by 10% by an authorized gas conversion station or dealer.
For Canadian Installations from 2000 to 4500 ft (610-1372 m), use U.S.A. column 2001 to 3000 ft (611 to 914 m)

Dry Coil Air Delivery** - Horizontal and Downflow Discharge Sizes 24-60 208/230 VAC - 1 Phase

Unit Size	Heating Rise °F (°C)	Motor Speed	Allowable Functions	Motor Speed Selection			ESP (in. W.C.)									
							0.1	0.2	0.3	0.4	0.5	0.6	0.7	0.8	0.9	1
24060	25 - 55 (14 - 31)	1	Continuous Fan*	SW2-5	SW2-6	CFM	480	460	344	212	NA	NA	NA	NA	NA	NA
				OFF	OFF											
			Dehumidification Low	SW1-7	SW1-8											
				OFF	OFF											
			Low Stage Cooling	SW1-3	SW1-4	BHP	0.06	0.06	0.07	0.07	NA	NA	NA	NA	NA	NA
				OFF	OFF											
			Low Stage Heating	SW2-3	SW2-4	Gas Heat Rise (°F)	NA	NA	NA	NA	NA	NA	NA	NA	NA	NA
				OFF	OFF	Gas Heat Rise (°C)	NA	NA	NA	NA	NA	NA	NA	NA	NA	NA
		2	Continuous Fan	SW2-5	SW2-6	CFM	712	625	531	440	344	208	NA	NA	NA	NA
				ON	OFF											
			Dehumidification Low	SW1-7	SW1-8											
				ON	OFF											
			Low Stage Cooling	SW1-3	SW1-4	BHP	0.09	0.10	0.10	0.10	0.11	0.11	NA	NA	NA	NA
				ON	OFF											
			Low Stage Heating	SW2-3	SW2-4	Gas Heat Rise (°F)	41	46	55	NA	NA	NA	NA	NA	NA	NA
				ON	OFF	Gas Heat Rise (°C)	23	26	30	NA	NA	NA	NA	NA	NA	NA
		3	Continuous Fan	SW2-5	SW2-6	CFM	747	663	575	473	370	289	179	NA	NA	NA
				OFF	ON											
			Dehumidification Low	SW1-7	SW1-8											
				OFF	ON											
			Low Stage Cooling	SW1-3	SW1-4	BHP	0.10	0.11	0.11	0.12	0.12	0.13	0.13	NA	NA	NA
				OFF	ON											
			Low Stage Heating*	SW2-3	SW2-4	Gas Heat Rise (°F)	39	44	50	NA	NA	NA	NA	NA	NA	NA
				OFF	ON	Gas Heat Rise (°C)	22	24	28	NA	NA	NA	NA	NA	NA	NA
		4	Continuous Fan	SW2-5	SW2-6	CFM	864	790	716	637	552	468	366	295	203	NA
				ON	ON											
			Dehumidification Low	SW1-7	SW1-8											
				ON	ON											
			Low Stage Cooling*	SW1-3	SW1-4	BHP	0.15	0.14	0.14	0.15	0.15	0.16	0.17	0.17	NA	NA
				ON	ON											
			Low Stage Heating	SW2-3	SW2-4	Gas Heat Rise (°F)	34	37	41	46	53	NA	NA	NA	NA	NA
				ON	ON	Gas Heat Rise (°C)	19	20	23	25	29	NA	NA	NA	NA	NA

Manufacturer reserves the right to change, at any time, specifications and designs without notice and without obligations.

Dry Coil Air Delivery** - Horizontal and Downflow Discharge Sizes 24-60 208/230 VAC - 1 Phase (Continued)

Unit Size	Heating Rise °F (°C)	Motor Speed	Allowable Functions	Motor Speed Selection			ESP (in. W.C.)									
							0.1	0.2	0.3	0.4	0.5	0.6	0.7	0.8	0.9	1
24060	25 - 55 (14 - 31)	5	Dehumidification High	SW1-5	SW1-6	CFM	804	725	643	555	471	380	281	145	NA	NA
				OFF	OFF											
			High Stage Cooling	SW1-1	SW1-2	BHP	0.11	0.12	0.13	0.13	0.13	0.14	0.14	0.14	NA	NA
				OFF	OFF											
			High Stage Heating	SW2-1	SW2-2	Gas Heat Rise (°F)	NA	NA	NA	NA	NA	NA	NA	NA	NA	NA
				OFF	OFF	Gas Heat Rise (°C)	NA	NA	NA	NA	NA	NA	NA	NA	NA	NA
		6	Dehumidification High	SW1-5	SW1-6	CFM	956	883	817	747	676	604	529	450	348	241
				ON	OFF											
			High Stage Cooling	SW1-1	SW1-2	BHP	0.17	0.18	0.18	0.19	0.19	0.20	0.20	0.21	0.21	0.22
				ON	OFF											
			High Stage Heating	SW2-1	SW2-2	Gas Heat Rise (°F)	47	51	55	NA	NA	NA	NA	NA	NA	NA
				ON	OFF	Gas Heat Rise (°C)	26	28	30	NA	NA	NA	NA	NA	NA	NA
		7	Dehumidification High	SW1-5	SW1-6	CFM	1134	1077	1020	962	904	842	777	704	634	565
				OFF	ON											
			High Stage Cooling*	SW1-1	SW1-2	BHP	0.27	0.27	0.28	0.29	0.30	0.30	0.31	0.32	0.32	0.33
				OFF	ON											
			High Stage Heating	SW2-1	SW2-2	Gas Heat Rise (°F)	39	41	44	46	49	53	NA	NA	NA	NA
				OFF	ON	Gas Heat Rise (°C)	22	23	24	26	27	29	NA	NA	NA	NA
		8	Dehumidification High	SW1-5	SW1-6	CFM	1180	1118	1059	1002	943	885	827	766	707	643
				ON	ON											
			High Stage Cooling	SW1-1	SW1-2	BHP	0.27	0.28	0.29	0.30	0.30	0.31	0.32	0.32	0.33	0.34
				ON	ON											
			High Stage Heating*	SW2-1	SW2-2	Gas Heat Rise (°F)	38	40	42	45	47	50	54	NA	NA	NA
				ON	ON											
			High Static Cooling	SW2-8		Gas Heat Rise (°C)	21	22	23	25	26	28	30	NA	NA	NA
				OFF												
		9	High Static Cooling	SW2-8		CFM	1236	1187	1133	1079	1026	969	911	849	785	713
				ON		BHP	0.33	0.34	0.35	0.35	0.36	0.37	0.38	0.39	0.39	0.39

Manufacturer reserves the right to change, at any time, specifications and designs without notice and without obligations.

Dry Coil Air Delivery** - Horizontal and Downflow Discharge Sizes 24-60 208/230 VAC - 1 Phase (Continued)

Unit Size	Heating Rise °F (°C)	Motor Speed	Allowable Functions	Motor Speed Selection			ESP (in. W.C.)									
							0.1	0.2	0.3	0.4	0.5	0.6	0.7	0.8	0.9	1
36060	25 - 55 (14 - 31)	1	Continuous Fan	SW2-5	SW2-6	CFM	749	670	593	495	418	333	261	186	139	NA
				OFF	OFF											
			Dehumidification Low	SW1-7	SW1-8											
				OFF	OFF											
			Low Stage Cooling	SW1-3	SW1-4	BHP	0.06	0.07	0.08	0.09	0.09	0.10	0.11	0.11	0.12	NA
				OFF	OFF											
			Low Stage Heating*	SW2-3	SW2-4	Gas Heat Rise (°F)	39	43	49	NA	NA	NA	NA	NA	NA	NA
				OFF	OFF	Gas Heat Rise (°C)	22	24	27	NA	NA	NA	NA	NA	NA	NA
		2	Continuous Fan*	SW2-5	SW2-6	CFM	818	742	673	598	512	434	358	279	217	168
				ON	OFF											
			Dehumidification Low	SW1-7	SW1-8											
				ON	OFF											
			Low Stage Cooling	SW1-3	SW1-4	BHP	0.08	0.08	0.09	0.10	0.11	0.12	0.12	0.13	0.13	0.14
				ON	OFF											
			Low Stage Heating	SW2-3	SW2-4	Gas Heat Rise (°F)	35	39	43	49	NA	NA	NA	NA	NA	NA
				ON	OFF	Gas Heat Rise (°C)	20	22	24	27	NA	NA	NA	NA	NA	NA
		3	Continuous Fan	SW2-5	SW2-6	CFM	980	882	814	747	679	608	545	482	432	384
				OFF	ON											
			Dehumidification Low	SW1-7	SW1-8											
				OFF	ON											
			Low Stage Cooling	SW1-3	SW1-4	BHP	0.11	0.11	0.12	0.12	0.13	0.14	0.15	0.15	0.16	0.17
				OFF	ON											
			Low Stage Heating	SW2-3	SW2-4	Gas Heat Rise (°F)	30	33	36	39	43	48	53	NA	NA	NA
				OFF	ON	Gas Heat Rise (°C)	16	18	20	22	24	27	30	NA	NA	NA
		4	Continuous Fan	SW2-5	SW2-6	CFM	1028	964	901	838	774	711	647	588	532	484
				ON	ON											
			Dehumidification Low	SW1-7	SW1-8											
				ON	ON											
			Low Stage Cooling*	SW1-3	SW1-4	BHP	0.12	0.13	0.14	0.15	0.15	0.16	0.17	0.18	0.19	0.19
				ON	ON											
			Low Stage Heating	SW2-3	SW2-4	Gas Heat Rise (°F)	28	30	32	35	37	41	45	49	55	NA
				ON	ON	Gas Heat Rise (°C)	16	17	18	19	21	23	25	27	30	NA

Manufacturer reserves the right to change, at any time, specifications and designs without notice and without obligations.

Dry Coil Air Delivery** - Horizontal and Downflow Discharge Sizes 24-60 208/230 VAC - 1 Phase (Continued)

Unit Size	Heating Rise °F (°C)	Motor Speed	Allowable Functions	Motor Speed Selection			ESP (in. W.C.)									
							0.1	0.2	0.3	0.4	0.5	0.6	0.7	0.8	0.9	1
36060	25 - 55 (14 - 31)	5	Dehumidification High	SW1-5	SW1-6	CFM	1164	1107	1051	995	939	882	824	767	711	656
				OFF	OFF											
			High Stage Cooling	SW1-1	SW1-2	BHP	0.16	0.17	0.18	0.19	0.20	0.21	0.22	0.22	0.23	0.24
				OFF	OFF											
			High Stage Heating*	SW2-1	SW2-2	Gas Heat Rise (°F)	38	40	42	45	48	51	54	NA	NA	NA
				OFF	OFF	Gas Heat Rise (°C)	21	22	24	25	26	28	30	NA	NA	NA
		6	Dehumidification High	SW1-5	SW1-6	CFM	1299	1246	1196	1146	1095	1043	990	937	886	825
				ON	OFF											
			High Stage Cooling	SW1-1	SW1-2	BHP	0.21	0.21	0.22	0.23	0.24	0.25	0.26	0.27	0.28	0.29
				ON	OFF											
			High Stage Heating	SW2-1	SW2-2	Gas Heat Rise (°F)	34	36	37	39	41	43	45	48	50	54
				ON	OFF	Gas Heat Rise (°C)	19	20	21	22	23	24	25	26	28	30
		7	Dehumidification High	SW1-5	SW1-6	CFM	1391	1340	1294	1247	1199	1151	1104	1054	1003	946
				OFF	ON											
			High Stage Cooling	SW1-1	SW1-2	BHP	0.25	0.26	0.27	0.28	0.29	0.30	0.31	0.32	0.33	0.34
				OFF	ON											
			High Stage Heating	SW2-1	SW2-2	Gas Heat Rise (°F)	32	33	34	36	37	39	40	42	45	47
				OFF	ON	Gas Heat Rise (°C)	18	19	19	20	21	22	22	24	25	26
		8	Dehumidification High	SW1-5	SW1-6	CFM	1423	1377	1331	1288	1240	1192	1147	1097	1047	998
				ON	ON											
			High Stage Cooling*	SW1-1	SW1-2	BHP	0.26	0.27	0.28	0.29	0.30	0.32	0.33	0.34	0.35	0.36
				ON	ON											
			High Stage Heating	SW2-1	SW2-2	Gas Heat Rise (°F)	31	32	34	35	36	37	39	41	43	45
				ON	ON											
			High Static Cooling	SW2-8		Gas Heat Rise (°C)	17	18	19	19	20	21	22	23	24	25
				OFF												
		9	High Static Cooling	SW2-8		CFM	1511	1466	1420	1378	1338	1293	1245	1200	1156	1109
				ON		BHP	0.30	0.31	0.33	0.34	0.35	0.36	0.37	0.38	0.39	0.40

Manufacturer reserves the right to change, at any time, specifications and designs without notice and without obligations.

Dry Coil Air Delivery** - Horizontal and Downflow Discharge Sizes 24-60 208/230 VAC - 1 Phase (Continued)

Unit Size	Heating Rise °F (°C)	Motor Speed	Allowable Functions	Motor Speed Selection			ESP (in. W.C.)									
							0.1	0.2	0.3	0.4	0.5	0.6	0.7	0.8	0.9	1
36090	35 - 65 (19 - 36)	1	Continuous Fan*	SW2-5	SW2-6	CFM	749	670	593	495	418	333	261	186	139	NA
				OFF	OFF											
			Dehumidification Low	SW1-7	SW1-8											
				OFF	OFF											
			Low Stage Cooling	SW1-3	SW1-4	BHP	0.06	0.07	0.08	0.09	0.09	0.10	0.11	0.11	0.12	NA
				OFF	OFF											
			Low Stage Heating	SW2-3	SW2-4	Gas Heat Rise (°F)	58	65	NA	NA	NA	NA	NA	NA	NA	NA
				OFF	OFF	Gas Heat Rise (°C)	32	36	NA	NA	NA	NA	NA	NA	NA	NA
		2	Continuous Fan	SW2-5	SW2-6	CFM	974	761	685	609	534	459	403	346	291	242
				ON	OFF											
			Dehumidification Low	SW1-7	SW1-8											
				ON	OFF											
			Low Stage Cooling	SW1-3	SW1-4	BHP	0.11	0.09	0.09	0.10	0.11	0.11	0.12	0.13	0.13	0.14
				ON	OFF											
			Low Stage Heating	SW2-3	SW2-4	Gas Heat Rise (°F)	45	57	64	NA	NA	NA	NA	NA	NA	NA
				ON	OFF	Gas Heat Rise (°C)	25	32	35	NA	NA	NA	NA	NA	NA	NA
		3	Continuous Fan	SW2-5	SW2-6	CFM	980	882	814	747	679	608	545	482	432	384
				OFF	ON											
			Dehumidification Low	SW1-7	SW1-8											
				OFF	ON											
			Low Stage Cooling	SW1-3	SW1-4	BHP	0.11	0.11	0.12	0.12	0.13	0.14	0.15	0.15	0.16	0.17
				OFF	ON											
			Low Stage Heating*	SW2-3	SW2-4	Gas Heat Rise (°F)	44	49	53	58	64	NA	NA	NA	NA	NA
				OFF	ON	Gas Heat Rise (°C)	25	27	30	32	36	NA	NA	NA	NA	NA
		4	Continuous Fan	SW2-5	SW2-6	CFM	1028	964	901	838	774	711	647	588	532	484
				ON	ON											
			Dehumidification Low	SW1-7	SW1-8											
				ON	ON											
			Low Stage Cooling*	SW1-3	SW1-4	BHP	0.12	0.13	0.14	0.15	0.15	0.16	0.17	0.18	0.19	0.19
				ON	ON											
			Low Stage Heating	SW2-3	SW2-4	Gas Heat Rise (°F)	42	45	48	52	56	61	NA	NA	NA	NA
				ON	ON	Gas Heat Rise (°C)	24	25	27	29	31	34	NA	NA	NA	NA

Manufacturer reserves the right to change, at any time, specifications and designs without notice and without obligations.

Dry Coil Air Delivery** - Horizontal and Downflow Discharge Sizes 24-60 208/230 VAC - 1 Phase (Continued)

Unit Size	Heating Rise °F (°C)	Motor Speed	Allowable Functions	Motor Speed Selection			ESP (in. W.C.)									
							0.1	0.2	0.3	0.4	0.5	0.6	0.7	0.8	0.9	1
36090	35 - 65 (19 - 36)	5	Dehumidification High	SW1-5	SW1-6	CFM	1164	1107	1051	995	939	882	824	767	711	656
				OFF	OFF											
			High Stage Cooling	SW1-1	SW1-2	BHP	0.16	0.17	0.18	0.19	0.20	0.21	0.22	0.22	0.23	0.24
				OFF	OFF											
			High Stage Heating	SW2-1	SW2-2	Gas Heat Rise (°F)	58	60	64	NA	NA	NA	NA	NA	NA	NA
				OFF	OFF	Gas Heat Rise (°C)	32	34	35	NA	NA	NA	NA	NA	NA	NA
		6	Dehumidification High	SW1-5	SW1-6	CFM	1299	1246	1196	1146	1095	1043	990	937	886	825
				ON	OFF											
			High Stage Cooling	SW1-1	SW1-2	BHP	0.21	0.21	0.22	0.23	0.24	0.25	0.26	0.27	0.28	0.29
				ON	OFF											
			High Stage Heating	SW2-1	SW2-2	Gas Heat Rise (°F)	52	54	56	58	61	64	NA	NA	NA	NA
				ON	OFF	Gas Heat Rise (°C)	29	30	31	32	34	36	NA	NA	NA	NA
		7	Dehumidification High	SW1-5	SW1-6	CFM	1391	1340	1294	1247	1199	1151	1104	1054	1003	946
				OFF	ON											
			High Stage Cooling	SW1-1	SW1-2	BHP	0.25	0.26	0.27	0.28	0.29	0.30	0.31	0.32	0.33	0.34
				OFF	ON											
			High Stage Heating*	SW2-1	SW2-2	Gas Heat Rise (°F)	48	50	52	54	56	58	61	64	NA	NA
				OFF	ON	Gas Heat Rise (°C)	27	28	29	30	31	32	34	35	NA	NA
		8	Dehumidification High	SW1-5	SW1-6	CFM	1423	1377	1331	1288	1240	1192	1147	1097	1047	998
				ON	ON											
			High Stage Cooling*	SW1-1	SW1-2	BHP	0.26	0.27	0.28	0.29	0.30	0.32	0.33	0.34	0.35	0.36
				ON	ON											
			High Stage Heating	SW2-1	SW2-2	Gas Heat Rise (°F)	47	49	50	52	54	56	58	61	64	NA
				ON	ON											
			High Static Cooling	SW2-8		Gas Heat Rise (°C)	26	27	28	29	30	31	32	34	36	NA
				OFF												
		9	High Static Cooling	SW2-8		CFM	1511	1466	1420	1378	1338	1293	1245	1200	1156	1109
				ON		BHP	0.30	0.31	0.33	0.34	0.35	0.36	0.37	0.38	0.39	0.40

Manufacturer reserves the right to change, at any time, specifications and designs without notice and without obligations.

Dry Coil Air Delivery** - Horizontal and Downflow Discharge Sizes 24-60 208/230 VAC - 1 Phase (Continued)

Unit Size	Heating Rise °F (°C)	Motor Speed	Allowable Functions	Motor Speed Selection		ESP (in. W.C.)										
							0.1	0.2	0.3	0.4	0.5	0.6	0.7	0.8	0.9	1
48090	35 - 65 (19 - 36)	1	Continuous Fan*	SW2-5	SW2-6	CFM	903	696	622	552	482	419	358	303	255	199
				OFF	OFF											
			Dehumidification Low	SW1-7	SW1-8											
				OFF	OFF											
			Low Stage Cooling	SW1-3	SW1-4	BHP	0.10	0.08	0.09	0.09	0.10	0.11	0.11	0.12	0.13	0.13
				OFF	OFF											
			Low Stage Heating	SW2-3	SW2-4	Gas Heat Rise (°F)	48	63	NA	NA	NA	NA	NA	NA	NA	NA
				OFF	OFF	Gas Heat Rise (°C)	27	35	NA	NA	NA	NA	NA	NA	NA	NA
		2	Continuous Fan	SW2-5	SW2-6	CFM	945	885	820	757	696	638	579	527	480	429
				ON	OFF											
			Dehumidification Low	SW1-7	SW1-8											
				ON	OFF											
			Low Stage Cooling	SW1-3	SW1-4	BHP	0.11	0.12	0.12	0.13	0.14	0.15	0.16	0.16	0.17	0.18
				ON	OFF											
			Low Stage Heating*	SW2-3	SW2-4	Gas Heat Rise (°F)	46	49	53	57	63	NA	NA	NA	NA	NA
				ON	OFF	Gas Heat Rise (°C)	26	27	29	32	35	NA	NA	NA	NA	NA
		3	Continuous Fan	SW2-5	SW2-6	CFM	1102	1051	999	945	890	837	785	734	681	634
				OFF	ON											
			Dehumidification Low	SW1-7	SW1-8											
				OFF	ON											
			Low Stage Cooling	SW1-3	SW1-4	BHP	0.15	0.16	0.17	0.18	0.19	0.20	0.21	0.22	0.23	0.24
				OFF	ON											
			Low Stage Heating	SW2-3	SW2-4	Gas Heat Rise (°F)	39	41	44	46	49	52	55	59	64	NA
				OFF	ON	Gas Heat Rise (°C)	22	23	24	26	27	29	31	33	36	NA
		4	Continuous Fan	SW2-5	SW2-6	CFM	1297	1253	1207	1163	1115	1066	1018	974	931	888
				ON	ON											
			Dehumidification Low	SW1-7	SW1-8											
				ON	ON											
			Low Stage Cooling*	SW1-3	SW1-4	BHP	0.23	0.24	0.24	0.26	0.27	0.27	0.28	0.29	0.30	0.31
				ON	ON											
			Low Stage Heating	SW2-3	SW2-4	Gas Heat Rise (°F)	34	35	36	37	39	41	43	45	47	49
				ON	ON	Gas Heat Rise (°C)	19	19	20	21	22	23	24	25	26	27

Manufacturer reserves the right to change, at any time, specifications and designs without notice and without obligations.

Dry Coil Air Delivery** - Horizontal and Downflow Discharge Sizes 24-60 208/230 VAC - 1 Phase (Continued)

Unit Size	Heating Rise °F (°C)	Motor Speed	Allowable Functions	Motor Speed Selection			ESP (in. W.C.)									
							0.1	0.2	0.3	0.4	0.5	0.6	0.7	0.8	0.9	1
48090	35 - 65 (19 - 36)	5	Dehumidification High	SW1-5	SW1-6	CFM	1383	1339	1296	1254	1209	1163	1119	1076	1033	989
				OFF	OFF											
			High Stage Cooling	SW1-1	SW1-2	BHP	0.26	0.27	0.28	0.30	0.31	0.32	0.33	0.34	0.35	0.36
				OFF	OFF											
			High Stage Heating*	SW2-1	SW2-2	Gas Heat Rise (°F)	48	50	52	53	55	58	60	62	65	NA
				OFF	OFF	Gas Heat Rise (°C)	27	28	29	30	31	32	33	35	36	NA
		6	Dehumidification High	SW1-5	SW1-6	CFM	1550	1511	1473	1434	1399	1362	1319	1278	1238	1202
				ON	OFF											
			High Stage Cooling	SW1-1	SW1-2	BHP	0.36	0.37	0.38	0.39	0.40	0.41	0.42	0.44	0.45	0.46
				ON	OFF											
			High Stage Heating	SW2-1	SW2-2	Gas Heat Rise (°F)	43	44	45	47	48	49	51	52	54	56
				ON	OFF	Gas Heat Rise (°C)	24	25	25	26	27	27	28	29	30	31
		7	Dehumidification High	SW1-5	SW1-6	CFM	1799	1759	1725	1676	1625	1584	1546	1509	1473	1437
				OFF	ON											
			High Stage Cooling*	SW1-1	SW1-2	BHP	0.50	0.51	0.52	0.54	0.55	0.57	0.58	0.59	0.61	0.62
				OFF	ON											
			High Stage Heating	SW2-1	SW2-2	Gas Heat Rise (°F)	37	38	39	40	41	42	43	44	45	47
				OFF	ON	Gas Heat Rise (°C)	21	21	22	22	23	23	24	25	25	26
		8	Dehumidification High	SW1-5	SW1-6	CFM	1936	1901	1864	1831	1798	1767	1736	1702	1670	1633
				ON	ON											
			High Stage Cooling	SW1-1	SW1-2	BHP	0.63	0.64	0.65	0.66	0.68	0.69	0.70	0.71	0.73	0.74
				ON	ON											
			High Stage Heating	SW2-1	SW2-2	Gas Heat Rise (°F)	35	35	36	37	37	38	39	39	40	41
				ON	ON											
			High Static Cooling	SW2-8		Gas Heat Rise (°C)	19	20	20	20	21	21	21	22	22	23
				OFF												
		9	High Static Cooling	SW2-8		CFM	1966	1933	1903	1872	1842	1811	1782	1751	1718	1619
				ON		BHP	0.67	0.68	0.70	0.71	0.73	0.74	0.75	0.77	0.78	0.74

Manufacturer reserves the right to change, at any time, specifications and designs without notice and without obligations.

Dry Coil Air Delivery** - Horizontal and Downflow Discharge Sizes 24-60 208/230 VAC - 1 Phase (Continued)

Unit Size	Heating Rise °F (°C)	Motor Speed	Allowable Functions	Motor Speed Selection			ESP (in. W.C.)									
							0.1	0.2	0.3	0.4	0.5	0.6	0.7	0.8	0.9	1
48115	30 - 60 (17 - 33)	1	Continuous Fan*	SW2-5	SW2-6	CFM	903	696	622	552	482	419	358	303	255	199
				OFF	OFF											
			Dehumidification Low	SW1-7	SW1-8											
				OFF	OFF											
			Low Stage Cooling	SW1-3	SW1-4	BHP	0.10	0.08	0.09	0.09	0.10	0.11	0.11	0.12	0.13	0.13
				OFF	OFF											
			Low Stage Heating	SW2-3	SW2-4	Gas Heat Rise (°F)	NA	NA	NA	NA	NA	NA	NA	NA	NA	NA
				OFF	OFF	Gas Heat Rise (°C)	NA	NA	NA	NA	NA	NA	NA	NA	NA	NA
		2	Continuous Fan	SW2-5	SW2-6	CFM	945	885	820	757	696	638	579	527	480	429
				ON	OFF											
			Dehumidification Low	SW1-7	SW1-8											
				ON	OFF											
			Low Stage Cooling	SW1-3	SW1-4	BHP	0.11	0.12	0.12	0.13	0.14	0.15	0.16	0.16	0.17	0.18
				ON	OFF											
			Low Stage Heating	SW2-3	SW2-4	Gas Heat Rise (°F)	59	NA	NA	NA	NA	NA	NA	NA	NA	NA
				ON	OFF	Gas Heat Rise (°C)	33	NA	NA	NA	NA	NA	NA	NA	NA	NA
		3	Continuous Fan	SW2-5	SW2-6	CFM	1102	1051	999	945	890	837	785	734	681	634
				OFF	ON											
			Dehumidification Low	SW1-7	SW1-8											
				OFF	ON											
			Low Stage Cooling	SW1-3	SW1-4	BHP	0.15	0.16	0.17	0.18	0.19	0.20	0.21	0.22	0.23	0.24
				OFF	ON											
			Low Stage Heating	SW2-3	SW2-4	Gas Heat Rise (°F)	51	53	56	59	NA	NA	NA	NA	NA	NA
				OFF	ON	Gas Heat Rise (°C)	28	29	31	33	NA	NA	NA	NA	NA	NA
		4				CFM	1297	1253	1207	1163	1115	1066	1018	974	931	888
			Dehumidification Low	SW1-7	SW1-8											
				ON	ON											
			Low Stage Cooling*	SW1-3	SW1-4	BHP	0.23	0.24	0.24	0.26	0.27	0.27	0.28	0.29	0.30	0.31
				ON	ON											
			Low Stage Heating*	SW2-3	SW2-4	Gas Heat Rise (°F)	43	45	46	48	50	52	55	57	60	NA
				ON	ON	Gas Heat Rise (°C)	24	25	26	27	28	29	30	32	33	NA

Manufacturer reserves the right to change, at any time, specifications and designs without notice and without obligations.

Dry Coil Air Delivery** - Horizontal and Downflow Discharge Sizes 24-60 208/230 VAC - 1 Phase (Continued)

Unit Size	Heating Rise °F (°C)	Motor Speed	Allowable Functions	Motor Speed Selection			ESP (in. W.C.)									
							0.1	0.2	0.3	0.4	0.5	0.6	0.7	0.8	0.9	1
48115	30 - 60 (19 - 36)	5	Dehumidification High	SW1-5	SW1-6	CFM	1383	1339	1296	1254	1209	1163	1119	1076	1033	989
				OFF	OFF											
			High Stage Cooling	SW1-1	SW1-2	BHP	0.26	0.27	0.28	0.30	0.31	0.32	0.33	0.34	0.35	0.36
				OFF	OFF											
			High Stage Heating	SW2-1	SW2-2	Gas Heat Rise (°F)	NA	NA	NA	NA	NA	NA	NA	NA	NA	NA
				OFF	OFF	Gas Heat Rise (°C)	NA	NA	NA	NA	NA	NA	NA	NA	NA	NA
		6	Dehumidification High	SW1-5	SW1-6	CFM	1550	1511	1473	1434	1399	1362	1319	1278	1238	1202
				ON	OFF											
			High Stage Cooling	SW1-1	SW1-2	BHP	0.36	0.37	0.38	0.39	0.40	0.41	0.42	0.44	0.45	0.46
				ON	OFF											
			High Stage Heating	SW2-1	SW2-2	Gas Heat Rise (°F)	55	57	58	60	NA	NA	NA	NA	NA	NA
				ON	OFF	Gas Heat Rise (°C)	31	31	32	33	NA	NA	NA	NA	NA	NA
		7	Dehumidification High	SW1-5	SW1-6	CFM	1799	1759	1725	1676	1625	1584	1546	1509	1473	1437
				OFF	ON											
			High Stage Cooling*	SW1-1	SW1-2	BHP	0.50	0.51	0.52	0.54	0.55	0.57	0.58	0.59	0.61	0.62
				OFF	ON											
			High Stage Heating	SW2-1	SW2-2	Gas Heat Rise (°F)	48	49	50	51	53	54	55	57	58	60
				OFF	ON	Gas Heat Rise (°C)	26	27	28	28	29	30	31	31	32	33
		8	Dehumidification High	SW1-5	SW1-6	CFM	1936	1901	1864	1831	1798	1767	1736	1702	1670	1633
				ON	ON											
			High Stage Cooling	SW1-1	SW1-2	BHP	0.63	0.64	0.65	0.66	0.68	0.69	0.70	0.71	0.73	0.74
				ON	ON											
			High Stage Heating*	SW2-1	SW2-2	Gas Heat Rise (°F)	44	45	46	47	48	48	49	50	51	52
				ON	ON											
			High Static Cooling	SW2-8		Gas Heat Rise (°C)	25	25	26	26	26	27	27	28	28	29
				OFF												
		9	High Static Cooling	SW2-8		CFM	1966	1933	1903	1872	1842	1811	1782	1751	1718	1619
				ON		BHP	0.67	0.68	0.70	0.71	0.73	0.74	0.75	0.77	0.78	0.74

Manufacturer reserves the right to change, at any time, specifications and designs without notice and without obligations.

Dry Coil Air Delivery** - Horizontal and Downflow Discharge Sizes 24-60 208/230 VAC - 1 Phase (Continued)

Unit Size	Heating Rise °F (°C)	Motor Speed	Allowable Functions	Motor Speed Selection		ESP (in. W.C.)										
							0.1	0.2	0.3	0.4	0.5	0.6	0.7	0.8	0.9	1
48130	35 - 65 (19 - 36)	1	Continuous Fan*	SW2-5	SW2-6	CFM	903	696	622	552	482	419	358	303	255	199
				OFF	OFF											
			Dehumidification Low	SW1-7	SW1-8											
				OFF	OFF											
			Low Stage Cooling	SW1-3	SW1-4	BHP	0.10	0.08	0.09	0.09	0.10	0.11	0.11	0.12	0.13	0.13
				OFF	OFF											
			Low Stage Heating	SW2-3	SW2-4	Gas Heat Rise (°F)	NA	NA	NA	NA	NA	NA	NA	NA	NA	NA
				OFF	OFF	Gas Heat Rise (°C)	NA	NA	NA	NA	NA	NA	NA	NA	NA	NA
		2	Continuous Fan	SW2-5	SW2-6	CFM	945	885	820	757	696	638	579	527	480	429
				ON	OFF											
			Dehumidification Low	SW1-7	SW1-8											
				ON	OFF											
			Low Stage Cooling	SW1-3	SW1-4	BHP	0.11	0.12	0.12	0.13	0.14	0.15	0.16	0.16	0.17	0.18
				ON	OFF											
			Low Stage Heating	SW2-3	SW2-4	Gas Heat Rise (°F)	NA	NA	NA	NA	NA	NA	NA	NA	NA	NA
				ON	OFF	Gas Heat Rise (°C)	NA	NA	NA	NA	NA	NA	NA	NA	NA	NA
		3	Continuous Fan	SW2-5	SW2-6	CFM	1102	1051	999	945	890	837	785	734	681	634
				OFF	ON											
			Dehumidification Low	SW1-7	SW1-8											
				OFF	ON											
			Low Stage Cooling	SW1-3	SW1-4	BHP	0.15	0.16	0.17	0.18	0.19	0.20	0.21	0.22	0.23	0.24
				OFF	ON											
			Low Stage Heating	SW2-3	SW2-4	Gas Heat Rise (°F)	57	60	63	NA	NA	NA	NA	NA	NA	NA
				OFF	ON	Gas Heat Rise (°C)	32	33	35	NA	NA	NA	NA	NA	NA	NA
		4	Continuous Fan	SW2-5	SW2-6	CFM	1297	1253	1207	1163	1115	1066	1018	974	931	888
				ON	ON											
			Dehumidification Low	SW1-7	SW1-8											
				ON	ON											
			Low Stage Cooling*	SW1-3	SW1-4	BHP	0.23	0.24	0.24	0.26	0.27	0.27	0.28	0.29	0.30	0.31
				ON	ON											
			Low Stage Heating*	SW2-3	SW2-4	Gas Heat Rise (°F)	48	50	52	54	56	59	62	65	NA	NA
				ON	ON	Gas Heat Rise (°C)	27	28	29	30	31	33	34	36	NA	NA

Manufacturer reserves the right to change, at any time, specifications and designs without notice and without obligations.

Dry Coil Air Delivery** - Horizontal and Downflow Discharge Sizes 24-60 208/230 VAC - 1 Phase (Continued)

Unit Size	Heating Rise °F (°C)	Motor Speed	Allowable Functions	Motor Speed Selection			ESP (in. W.C.)									
							0.1	0.2	0.3	0.4	0.5	0.6	0.7	0.8	0.9	1
48130	35 - 65 (19 - 36)	5	Dehumidification High	SW1-5	SW1-6	CFM	1383	1339	1296	1254	1209	1163	1119	1076	1033	989
				OFF	OFF											
			High Stage Cooling	SW1-1	SW1-2	BHP	0.26	0.27	0.28	0.30	0.31	0.32	0.33	0.34	0.35	0.36
				OFF	OFF											
			High Stage Heating	SW2-1	SW2-2	Gas Heat Rise (°F)	NA	NA	NA	NA	NA	NA	NA	NA	NA	NA
				OFF	OFF	Gas Heat Rise (°C)	NA	NA	NA	NA	NA	NA	NA	NA	NA	NA
		6	Dehumidification High	SW1-5	SW1-6	CFM	1550	1511	1473	1434	1399	1362	1319	1278	1238	1202
				ON	OFF											
			High Stage Cooling	SW1-1	SW1-2	BHP	0.36	0.37	0.38	0.39	0.40	0.41	0.42	0.44	0.45	0.46
				ON	OFF											
			High Stage Heating	SW2-1	SW2-2	Gas Heat Rise (°F)	61	63	64	NA	NA	NA	NA	NA	NA	NA
				ON	OFF	Gas Heat Rise (°C)	34	35	36	NA	NA	NA	NA	NA	NA	NA
		7	Dehumidification High	SW1-5	SW1-6	CFM	1799	1759	1725	1676	1625	1584	1546	1509	1473	1437
				OFF	ON											
			High Stage Cooling*	SW1-1	SW1-2	BHP	0.50	0.51	0.52	0.54	0.55	0.57	0.58	0.59	0.61	0.62
				OFF	ON											
			High Stage Heating	SW2-1	SW2-2	Gas Heat Rise (°F)	53	54	55	56	58	60	61	63	64	66
				OFF	ON	Gas Heat Rise (°C)	29	30	30	31	32	33	34	35	36	37
		8	Dehumidification High	SW1-5	SW1-6	CFM	1936	1901	1864	1831	1798	1767	1736	1702	1670	1633
				ON	ON											
			High Stage Cooling	SW1-1	SW1-2	BHP	0.63	0.64	0.65	0.66	0.68	0.69	0.70	0.71	0.73	0.74
				ON	ON											
			High Stage Heating*	SW2-1	SW2-2	Gas Heat Rise (°F)	49	50	51	52	53	53	54	56	57	58
				ON	ON											
			High Static Cooling	SW2-8		Gas Heat Rise (°C)	27	28	28	29	29	30	30	31	31	32
				OFF												
		9	High Static Cooling	SW2-8		CFM	1966	1933	1903	1872	1842	1811	1782	1751	1718	1619
				ON		BHP	0.67	0.68	0.70	0.71	0.73	0.74	0.75	0.77	0.78	0.74

Manufacturer reserves the right to change, at any time, specifications and designs without notice and without obligations.

Dry Coil Air Delivery** - Horizontal and Downflow Discharge Sizes 24-60 208/230 VAC - 1 Phase (Continued)

Unit Size	Heating Rise °F (°C)	Motor Speed	Allowable Functions	Motor Speed Selection			ESP (in. W.C.)									
							0.1	0.2	0.3	0.4	0.5	0.6	0.7	0.8	0.9	1
60090	35 - 65 (19 - 36)	1	Continuous Fan*	SW2-5	SW2-6	CFM	803	734	661	595	532	464	402	346	284	234
				OFF	OFF											
			Dehumidification Low	SW1-7	SW1-8											
				OFF	OFF											
			Low Stage Cooling	SW1-3	SW1-4	BHP	0.08	0.09	0.09	0.10	0.11	0.11	0.12	0.13	0.13	0.14
				OFF	OFF											
			Low Stage Heating	SW2-3	SW2-4	Gas Heat Rise (°F)	54	59	NA	NA	NA	NA	NA	NA	NA	NA
				OFF	OFF	Gas Heat Rise (°C)	30	33	NA	NA	NA	NA	NA	NA	NA	NA
		2	Continuous Fan	SW2-5	SW2-6	CFM	897	829	764	699	641	583	521	463	407	356
				ON	OFF											
			Dehumidification Low	SW1-7	SW1-8											
				ON	OFF											
			Low Stage Cooling	SW1-3	SW1-4	BHP	0.10	0.11	0.11	0.12	0.13	0.14	0.14	0.15	0.16	0.16
				ON	OFF											
			Low Stage Heating*	SW2-3	SW2-4	Gas Heat Rise (°F)	49	53	57	62	NA	NA	NA	NA	NA	NA
				ON	OFF	Gas Heat Rise (°C)	27	29	32	35	NA	NA	NA	NA	NA	NA
		3	Continuous Fan	SW2-5	SW2-6	CFM	1261	1218	1163	1115	1070	1020	971	917	872	829
				OFF	ON											
			Dehumidification Low	SW1-7	SW1-8											
				OFF	ON											
			Low Stage Cooling	SW1-3	SW1-4	BHP	0.21	0.22	0.23	0.24	0.25	0.26	0.27	0.28	0.29	0.30
				OFF	ON											
			Low Stage Heating	SW2-3	SW2-4	Gas Heat Rise (°F)	35	36	37	39	41	43	45	47	50	53
				OFF	ON	Gas Heat Rise (°C)	19	20	21	22	23	24	25	26	28	29
		4				CFM	1507	1472	1434	1388	1346	1307	1270	1227	1183	1142
			Dehumidification Low	SW1-7	SW1-8											
				ON	ON											
			Low Stage Cooling*	SW1-3	SW1-4	BHP	0.32	0.34	0.35	0.36	0.37	0.38	0.39	0.40	0.41	0.42
				ON	ON											
			Low Stage Heating	SW2-3	SW2-4	Gas Heat Rise (°F)	NA	NA	NA	NA	NA	NA	NA	35	37	38
				ON	ON	Gas Heat Rise (°C)	NA	NA	NA	NA	NA	NA	NA	20	20	21

Manufacturer reserves the right to change, at any time, specifications and designs without notice and without obligations.

Dry Coil Air Delivery** - Horizontal and Downflow Discharge Sizes 24-60 208/230 VAC - 1 Phase (Continued)

Unit Size	Heating Rise °F (°C)	Motor Speed	Allowable Functions	Motor Speed Selection			ESP (in. W.C.)									
							0.1	0.2	0.3	0.4	0.5	0.6	0.7	0.8	0.9	1
60090	35 - 65 (19 - 36)	5	Dehumidification High	SW1-5	SW1-6	CFM	1401	1364	1317	1271	1228	1189	1143	1097	1054	1012
				OFF	OFF											
			High Stage Cooling	SW1-1	SW1-2	BHP	0.27	0.28	0.30	0.31	0.32	0.32	0.33	0.34	0.35	0.36
				OFF	OFF											
			High Stage Heating*	SW2-1	SW2-2	Gas Heat Rise (°F)	48	49	51	53	55	56	59	61	64	NA
				OFF	OFF	Gas Heat Rise (°C)	27	27	28	29	30	31	33	34	35	NA
		6	Dehumidification High	SW1-5	SW1-6	CFM	1683	1648	1615	1579	1536	1497	1462	1427	1393	1355
				ON	OFF											
			High Stage Cooling	SW1-1	SW1-2	BHP	0.45	0.46	0.47	0.49	0.50	0.51	0.52	0.53	0.54	0.55
				ON	OFF											
			High Stage Heating	SW2-1	SW2-2	Gas Heat Rise (°F)	40	41	41	42	44	45	46	47	48	49
				ON	OFF	Gas Heat Rise (°C)	22	23	23	24	24	25	25	26	27	27
		7	Dehumidification High	SW1-5	SW1-6	CFM	1933	1901	1871	1843	1811	1775	1740	1706	1675	1606
				OFF	ON											
			High Stage Cooling	SW1-1	SW1-2	BHP	0.63	0.64	0.66	0.68	0.69	0.70	0.72	0.73	0.75	0.73
				OFF	ON											
			High Stage Heating	SW2-1	SW2-2	Gas Heat Rise (°F)	35	35	36	36	37	38	38	39	40	42
				OFF	ON	Gas Heat Rise (°C)	19	20	20	20	21	21	21	22	22	23
		8	Dehumidification High	SW1-5	SW1-6	CFM	1943	1905	1867	1818	1787	1743	1705	1664	1624	1587
				ON	ON											
			High Stage Cooling*	SW1-1	SW1-2	BHP	0.63	0.64	0.66	0.67	0.68	0.69	0.70	0.71	0.73	0.74
				ON	ON											
			High Stage Heating	SW2-1	SW2-2	Gas Heat Rise (°F)	NA	35	36	37	37	38	39	40	41	42
				ON	ON											
			High Static Cooling	SW2-8		Gas Heat Rise (°C)	NA	20	20	20	21	21	22	22	23	23
				OFF												
		9	High Static Cooling	SW2-8		CFM	1969	1939	1909	1881	1852	1817	1781	1748	1710	1613
				ON		BHP	0.66	0.67	0.69	0.71	0.72	0.74	0.75	0.76	0.77	0.73

Manufacturer reserves the right to change, at any time, specifications and designs without notice and without obligations.

Dry Coil Air Delivery** - Horizontal and Downflow Discharge Sizes 24-60 208/230 VAC - 1 Phase (Continued)

Unit Size	Heating Rise °F (°C)	Motor Speed	Allowable Functions	Motor Speed Selection			ESP (in. W.C.)									
							0.1	0.2	0.3	0.4	0.5	0.6	0.7	0.8	0.9	1
60115	30 - 60 (17 - 33)	1	Continuous Fan*	SW2-5	SW2-6	CFM	803	734	661	595	532	464	402	346	284	234
				OFF	OFF											
			Dehumidification Low	SW1-7	SW1-8											
				OFF	OFF											
			Low Stage Cooling	SW1-3	SW1-4	BHP	0.08	0.09	0.09	0.10	0.11	0.11	0.12	0.13	0.13	0.14
				OFF	OFF											
			Low Stage Heating	SW2-3	SW2-4	Gas Heat Rise (°F)	NA	NA	NA	NA	NA	NA	NA	NA	NA	NA
				OFF	OFF	Gas Heat Rise (°C)	NA	NA	NA	NA	NA	NA	NA	NA	NA	NA
		2	Continuous Fan	SW2-5	SW2-6	CFM	897	829	764	699	641	583	521	463	407	356
				ON	OFF											
			Dehumidification Low	SW1-7	SW1-8											
				ON	OFF											
			Low Stage Cooling	SW1-3	SW1-4	BHP	0.10	0.11	0.11	0.12	0.13	0.14	0.14	0.15	0.16	0.16
				ON	OFF											
			Low Stage Heating	SW2-3	SW2-4	Gas Heat Rise (°F)	NA	NA	NA	NA	NA	NA	NA	NA	NA	NA
				ON	OFF	Gas Heat Rise (°C)	NA	NA	NA	NA	NA	NA	NA	NA	NA	NA
		3	Continuous Fan	SW2-5	SW2-6	CFM	1261	1218	1163	1115	1070	1020	971	917	872	829
				OFF	ON											
			Dehumidification Low	SW1-7	SW1-8											
				OFF	ON											
			Low Stage Cooling	SW1-3	SW1-4	BHP	0.21	0.22	0.23	0.24	0.25	0.26	0.27	0.28	0.29	0.30
				OFF	ON											
			Low Stage Heating*	SW2-3	SW2-4	Gas Heat Rise (°F)	44	46	48	50	52	55	57	NA	NA	NA
				OFF	ON	Gas Heat Rise (°C)	25	25	27	28	29	30	32	NA	NA	NA
		4				CFM	1507	1472	1434	1388	1346	1307	1270	1227	1183	1142
			Dehumidification Low	SW1-7	SW1-8											
				ON	ON											
			Low Stage Cooling*	SW1-3	SW1-4	BHP	0.32	0.34	0.35	0.36	0.37	0.38	0.39	0.40	0.41	0.42
				ON	ON											
			Low Stage Heating	SW2-3	SW2-4	Gas Heat Rise (°F)	37	38	39	40	41	43	44	45	47	49
				ON	ON	Gas Heat Rise (°C)	21	21	22	22	23	24	24	25	26	27

Manufacturer reserves the right to change, at any time, specifications and designs without notice and without obligations.

Dry Coil Air Delivery** - Horizontal and Downflow Discharge Sizes 24-60 208/230 VAC - 1 Phase (Continued)

Unit Size	Heating Rise °F (°C)	Motor Speed	Allowable Functions	Motor Speed Selection			ESP (in. W.C.)									
							0.1	0.2	0.3	0.4	0.5	0.6	0.7	0.8	0.9	1
60115	30 - 60 (19 - 36)	5	Dehumidification High	SW1-5	SW1-6	CFM	1401	1364	1317	1271	1228	1189	1143	1097	1054	1012
				OFF	OFF											
			High Stage Cooling	SW1-1	SW1-2	BHP	0.27	0.28	0.30	0.31	0.32	0.32	0.33	0.34	0.35	0.36
				OFF	OFF											
			High Stage Heating	SW2-1	SW2-2	Gas Heat Rise (°F)	NA	NA	NA	NA	NA	NA	NA	NA	NA	NA
				OFF	OFF	Gas Heat Rise (°C)	NA	NA	NA	NA	NA	NA	NA	NA	NA	NA
		6	Dehumidification High	SW1-5	SW1-6	CFM	1683	1648	1615	1579	1536	1497	1462	1427	1393	1355
				ON	OFF											
			High Stage Cooling	SW1-1	SW1-2	BHP	0.45	0.46	0.47	0.49	0.50	0.51	0.52	0.53	0.54	0.55
				ON	OFF											
			High Stage Heating	SW2-1	SW2-2	Gas Heat Rise (°F)	51	52	53	54	56	57	59	60	NA	NA
				ON	OFF	Gas Heat Rise (°C)	28	29	29	30	31	32	33	33	NA	NA
		7	Dehumidification High	SW1-5	SW1-6	CFM	1933	1901	1871	1843	1811	1775	1740	1706	1675	1606
				OFF	ON											
			High Stage Cooling	SW1-1	SW1-2	BHP	0.63	0.64	0.66	0.68	0.69	0.70	0.72	0.73	0.75	0.73
				OFF	ON											
			High Stage Heating*	SW2-1	SW2-2	Gas Heat Rise (°F)	44	45	46	46	47	48	49	50	51	53
				OFF	ON	Gas Heat Rise (°C)	25	25	25	26	26	27	27	28	28	30
		8	Dehumidification High	SW1-5	SW1-6	CFM	1943	1905	1867	1818	1787	1743	1705	1664	1624	1587
				ON	ON											
			High Stage Cooling	SW1-1	SW1-2	BHP	0.63	0.64	0.66	0.67	0.68	0.69	0.70	0.71	0.73	0.74
				ON	ON											
			High Stage Heating	SW2-1	SW2-2	Gas Heat Rise (°F)	44	45	46	47	48	49	50	51	53	54
				ON	ON											
			High Static Cooling*	SW2-8		Gas Heat Rise (°C)	24	25	25	26	27	27	28	29	29	30
				OFF												
		9	High Static Cooling	SW2-8		CFM	1969	1939	1909	1881	1852	1817	1781	1748	1710	1613
				ON		BHP	0.66	0.67	0.69	0.71	0.72	0.74	0.75	0.76	0.77	0.73

Manufacturer reserves the right to change, at any time, specifications and designs without notice and without obligations.

Dry Coil Air Delivery** - Horizontal and Downflow Discharge Sizes 24-60 208/230 VAC - 1 Phase (Continued)

Unit Size	Heating Rise °F (°C)	Motor Speed	Allowable Functions	Motor Speed Selection		ESP (in. W.C.)										
							0.1	0.2	0.3	0.4	0.5	0.6	0.7	0.8	0.9	1
60130	35 - 65 (19 - 36)	1	Continuous Fan*	SW2-5	SW2-6	CFM	803	734	661	595	532	464	402	346	284	234
				OFF	OFF											
			Dehumidification Low	SW1-7	SW1-8											
				OFF	OFF											
			Low Stage Cooling	SW1-3	SW1-4	BHP	0.08	0.09	0.09	0.10	0.11	0.11	0.12	0.13	0.13	0.14
				OFF	OFF											
			Low Stage Heating	SW2-3	SW2-4	Gas Heat Rise (°F)	NA	NA	NA	NA	NA	NA	NA	NA	NA	NA
				OFF	OFF	Gas Heat Rise (°C)	NA	NA	NA	NA	NA	NA	NA	NA	NA	NA
		2	Continuous Fan	SW2-5	SW2-6	CFM	897	829	764	699	641	583	521	463	407	356
				ON	OFF											
			Dehumidification Low	SW1-7	SW1-8											
				ON	OFF											
			Low Stage Cooling	SW1-3	SW1-4	BHP	0.10	0.11	0.11	0.12	0.13	0.14	0.14	0.15	0.16	0.16
				ON	OFF											
			Low Stage Heating	SW2-3	SW2-4	Gas Heat Rise (°F)	NA	NA	NA	NA	NA	NA	NA	NA	NA	NA
				ON	OFF	Gas Heat Rise (°C)	NA	NA	NA	NA	NA	NA	NA	NA	NA	NA
		3	Continuous Fan	SW2-5	SW2-6	CFM	1261	1218	1163	1115	1070	1020	971	917	872	829
				OFF	ON											
			Dehumidification Low	SW1-7	SW1-8											
				OFF	ON											
			Low Stage Cooling	SW1-3	SW1-4	BHP	0.21	0.22	0.23	0.24	0.25	0.26	0.27	0.28	0.29	0.30
				OFF	ON											
			Low Stage Heating*	SW2-3	SW2-4	Gas Heat Rise (°F)	50	52	54	56	59	62	65	NA	NA	NA
				OFF	ON	Gas Heat Rise (°C)	28	29	30	31	33	34	36	NA	NA	NA
		4	Continuous Fan	SW2-5	SW2-6	CFM	1507	1472	1434	1388	1346	1307	1270	1227	1183	1142
				ON	ON											
			Dehumidification Low	SW1-7	SW1-8											
				ON	ON											
			Low Stage Cooling*	SW1-3	SW1-4	BHP	0.32	0.34	0.35	0.36	0.37	0.38	0.39	0.40	0.41	0.42
				ON	ON											
			Low Stage Heating	SW2-3	SW2-4	Gas Heat Rise (°F)	42	43	44	45	47	48	50	51	53	55
				ON	ON	Gas Heat Rise (°C)	23	24	24	25	26	27	28	28	30	31

Manufacturer reserves the right to change, at any time, specifications and designs without notice and without obligations.

Dry Coil Air Delivery** - Horizontal and Downflow Discharge Sizes 24-60 208/230 VAC - 1 Phase (Continued)

Unit Size	Heating Rise °F (°C)	Motor Speed	Allowable Functions	Motor Speed Selection			ESP (in. W.C.)									
							0.1	0.2	0.3	0.4	0.5	0.6	0.7	0.8	0.9	1
60130	35 - 65 (19 - 36)	5	Dehumidification High	SW1-5	SW1-6	CFM	1401	1364	1317	1271	1228	1189	1143	1097	1054	1012
				OFF	OFF											
			High Stage Cooling	SW1-1	SW1-2	BHP	0.27	0.28	0.30	0.31	0.32	0.32	0.33	0.34	0.35	0.36
				OFF	OFF											
			High Stage Heating	SW2-1	SW2-2	Gas Heat Rise (°F)	NA	NA	NA	NA	NA	NA	NA	NA	NA	NA
				OFF	OFF	Gas Heat Rise (°C)	NA	NA	NA	NA	NA	NA	NA	NA	NA	NA
		6	Dehumidification High	SW1-5	SW1-6	CFM	1683	1648	1615	1579	1536	1497	1462	1427	1393	1355
				ON	OFF											
			High Stage Cooling	SW1-1	SW1-2	BHP	0.45	0.46	0.47	0.49	0.50	0.51	0.52	0.53	0.54	0.55
				ON	OFF											
			High Stage Heating	SW2-1	SW2-2	Gas Heat Rise (°F)	56	57	59	60	62	63	65	NA	NA	NA
				ON	OFF	Gas Heat Rise (°C)	31	32	33	33	34	35	36	NA	NA	NA
		7	Dehumidification High	SW1-5	SW1-6	CFM	1933	1901	1871	1843	1811	1775	1740	1706	1675	1606
				OFF	ON											
			High Stage Cooling	SW1-1	SW1-2	BHP	0.63	0.64	0.66	0.68	0.69	0.70	0.72	0.73	0.75	0.73
				OFF	ON											
			High Stage Heating*	SW2-1	SW2-2	Gas Heat Rise (°F)	49	50	51	51	52	53	54	55	56	59
				OFF	ON	Gas Heat Rise (°C)	27	28	28	28	29	30	30	31	31	33
		8	Dehumidification High	SW1-5	SW1-6	CFM	1943	1905	1867	1818	1787	1743	1705	1664	1624	1587
				ON	ON											
			High Stage Cooling*	SW1-1	SW1-2	BHP	0.63	0.64	0.66	0.67	0.68	0.69	0.70	0.71	0.73	0.74
				ON	ON											
			High Stage Heating	SW2-1	SW2-2	Gas Heat Rise (°F)	49	50	51	52	53	54	55	57	58	60
				ON	ON											
			High Static Cooling	SW2-8		Gas Heat Rise (°C)	27	28	28	29	29	30	31	32	32	33
				OFF												
		9	High Static Cooling	SW2-8		CFM	1969	1939	1909	1881	1852	1817	1781	1748	1710	1613
				ON		BHP	0.66	0.67	0.69	0.71	0.72	0.74	0.75	0.76	0.77	0.73

Shaded areas indicate speed/static combinations that are permitted for dehumidification speed.

** - Air delivery values are without air filter and are for dry coil (See Wet Coil Pressure Drop Table).
* - Factory Supplied Function
NOTE: Deduct field-supplied air filter pressure drop and wet coil pressure drop to obtain static pressure available for ducting.

Manufacturer reserves the right to change, at any time, specifications and designs without notice and without obligations.

Wet Coil Pressure Drop (IN. W.C.)

Unit Size	Standard CFM (SCFM)																
	500	600	700	800	900	1000	1100	1200	1300	1400	1500	1600	1700	1800	1900	2000	2100
24	0.02	0.03	0.04	0.04	0.05	0.06											
36				0.03	0.04	0.05	0.05	0.06	0.07	0.08	0.08	0.09	0.10	0.11			
48						0.03	0.04	0.04	0.05	0.06	0.06	0.07	0.08	0.09	0.10	0.11	0.12
60						0.03	0.04	0.04	0.05	0.06	0.06	0.07	0.08	0.09	0.10	0.11	0.12

Economizer with 1-in. Filter Pressure Drop (IN. W.C.)

Filter Size in. (mm)	Cooling Tons	Standard CFM (SCFM)																
		500	600	700	800	900	1000	1100	1200	1300	1400	1500	1600	1700	1800	1900	2000	2100
600-1400 CFM 12x20x1+12x20x1 (305x508x25+305x508x25)	2.0	0.04	0.05	0.07	0.09	0.14	0.16	0.18	0.25	-	-	-	-	-	-	-	-	-
1200-1800 CFM 16x24x1+14x24x1 (406x610x25+356x610x25)	3.0	-	-	-	0.04	0.06	0.07	0.08	0.10	0.11	0.12	0.13	0.14	0.16	0.16	-	-	-
1500-2200 CFM 16x24x1+18x24x1 (406x610x25+457x610x25)	4.0	-	-	-	-	-	-	0.08	0.10	0.11	0.13	0.15	0.17	0.18	0.20	0.21	0.22	-
1500-2200 CFM 16x24x1+18x24x1 (406x610x25+457x610x25)	5.0	-	-	-	-	-	-	0.08	0.10	0.11	0.13	0.15	0.17	0.18	0.20	0.21	0.22	0.23

Filter Pressure Drop Table (IN. W.C.)

Filter Size in. (mm)	Cooling Tons	Standard CFM (SCFM)																
		500	600	700	800	900	1000	1100	1200	1300	1400	1500	1600	1700	1800	1900	2000	2100
600-1400 CFM 12x20x1+12x20x1 (305x508x25+305x508x25)	2.0	0.02	0.03	0.05	0.06	0.08	0.10	0.11	0.13	-	-	-	-	-	-	-	-	-
1200-1800 CFM 16x24x1+14x24x1 (406x610x25+356x610x25)	3.0	-	-	-	0.03	0.03	0.04	0.05	0.06	0.07	0.08	0.09	0.09	0.10	0.11	-	-	-
1500-2200 CFM 16x24x1+18x24x1 (406x610x25+457x610x25)	4.0	-	-	-	-	-	-	0.02	0.03	0.03	0.04	0.04	0.06	0.08	0.10	0.11	0.13	-
1500-2200 CFM 16x24x1+18x24x1 (406x610x25+457x610x25)	5.0	-	-	-	-	-	-	0.02	0.03	0.03	0.04	0.04	0.06	0.08	0.10	0.11	0.13	0.14

Manufacturer reserves the right to change, at any time, specifications and designs without notice and without obligations.

Typical Piping Wiring

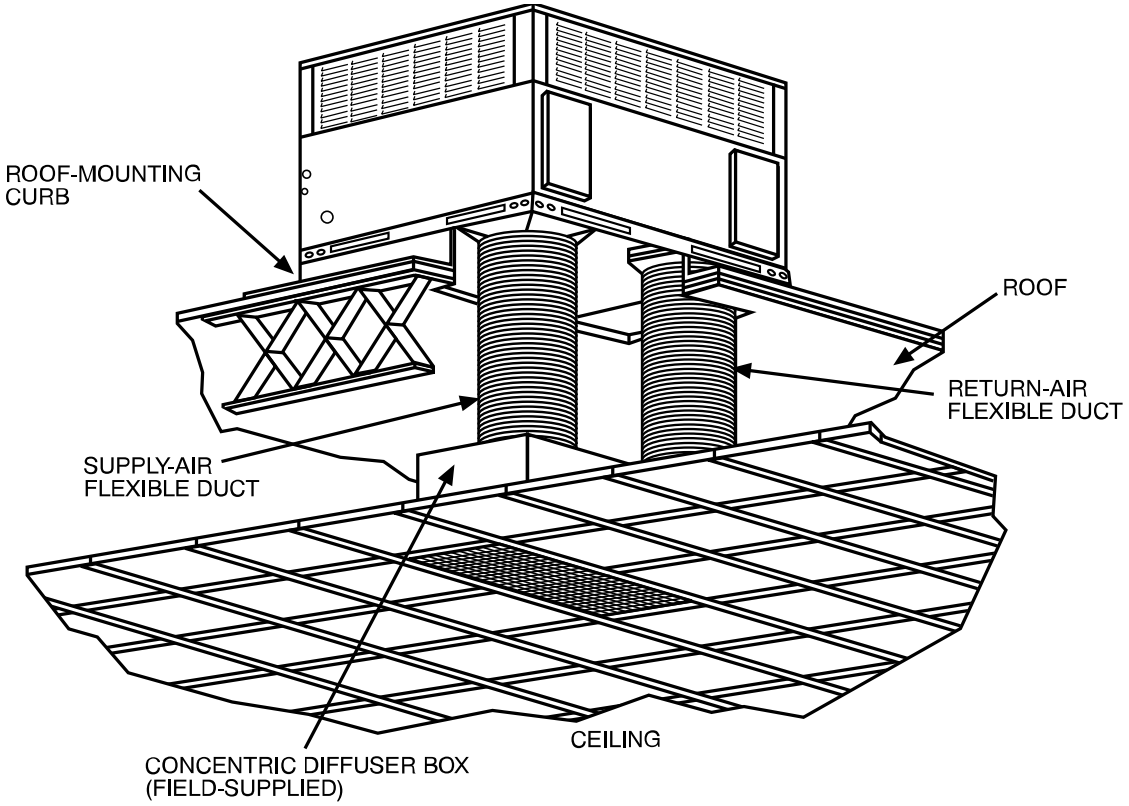

A09233

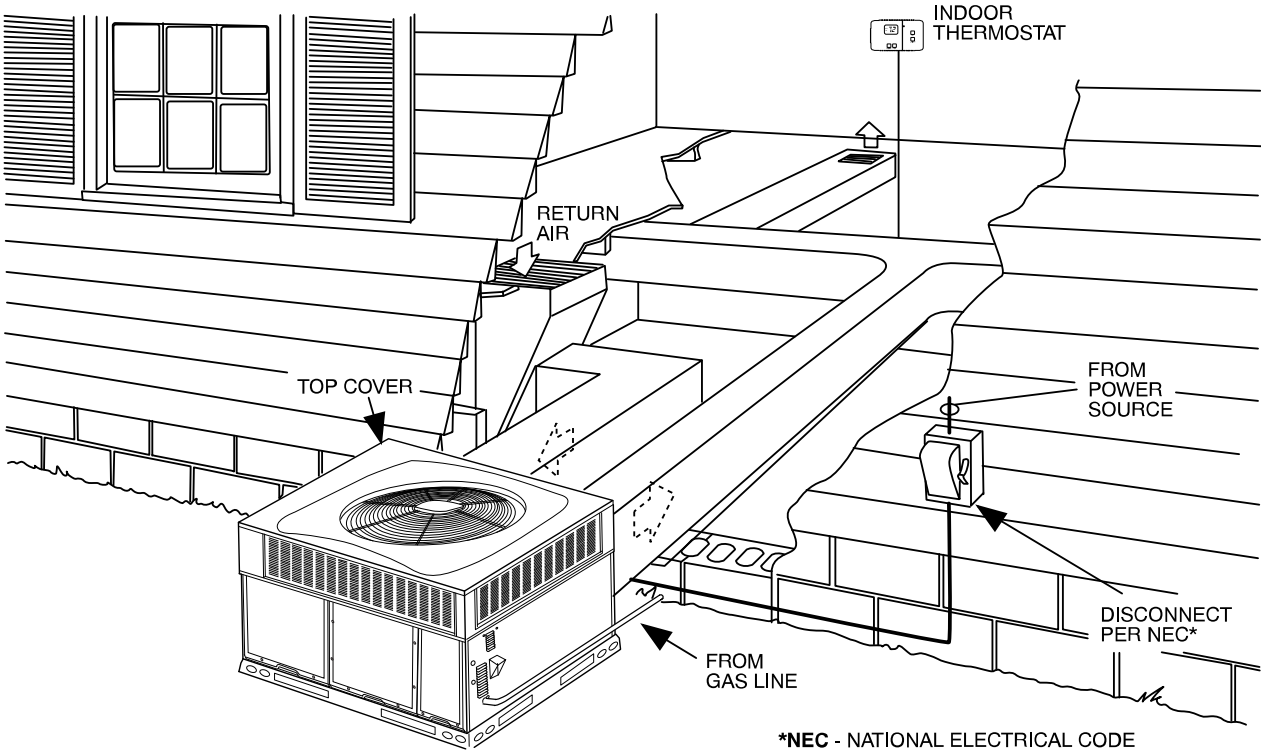

A09234

Application Data

Condensate trap — A 2-in. (50.8 mm) condensate trap must be field supplied.

Ductwork — Secure downflow discharge ductwork to roof curb. For horizontal discharge applications, attach ductwork to unit with flanges.

To convert a unit to downflow discharge — Units are equipped with factory-installed inserts in the down-flow openings. Removal of the inserts is similar to removing an electrical knock-out. Use the duct cover to seal the horizontal discharge openings in the unit. Units installed in horizontal discharge orientation do not require duct covers.

Airflow — Units are draw-thru in the cooling mode and blow-thru in the heating mode.

Maximum cooling airflow — To minimize the possibility of condensate blow-off from the evaporator, airflow through the units should not exceed 450 cfm per ton.

Minimum cooling airflow — Minimum cooling airflow is 350 cfm per ton.

Minimum ambient cooling operation temperature — All standard units have a minimum ambient operating temperature of 40°F (4°C). With accessory low ambient temperature kit, units can operate at temperatures down to 0°F (-17°C).

Minimum temperature — Air entering the heat exchanger in heating mode must be a minimum of 55°F (13°C) continuous and a maximum of 80°F (27°C) continuous.

Electrical Data

MODEL	NOMINAL V-PH-HZ	VOLTAGE RANGE		COMPRESSOR		OFM	IFM	IDM	POWER SUPPLY	
		MIN	MAX	RLA	LRA	FLA	FLA	FLA	MCA	MOCP
24060	208/230-1-60	197	253	10.9	61	0.6	3.9	0.27	18.1	25
36060, 36090	208/230-1-60	197	253	15.4	92	1.05	5.8	0.27	26.2	40
48090, 48115, 48130	208/230-1-60	197	253	21.2	104	1.05	7.6	0.27	35.3	50
60090, 60115, 60130	208/230-1-60	197	253	25.6	158	1.05	6.9	0.27	40.0	60

LEGEND

FLA - Full Load Amps
IDM - Inducer Motor
IFM - Indoor Fan Motor
LRA -Locked Rotor Amps
MCA - Minimum Circuit Amps
MOCP - Maximum Over Current Protection
OFM - Outdoor Fan Motor
RLA - Rated Load Amps

NOTES:

1. In compliance with NEC (National Electrical Code) requirements for multimotor and combination load equipment (refer to NEC Articles 430 and 440), the overcurrent protective device for the unit shall be Power Supply fuse or circuit breaker.
2. Minimum wire size is based on 60 C copper wire. If other than 60 C wire is used, or if length exceeds wire length in table, determine size from NEC.
3. Unbalanced 3-Phase Supply Voltage
   Never operate a motor where a phase imbalance in supply voltage is greater than 2%. Use the following formula to determine the percentage of voltage imbalance

   % Voltage imbalance

   $$= 100 \times \frac{\text{max voltage deviation from average voltage}}{\text{average voltage}}$$

EXAMPLE: Supply voltage is 230-3-60.

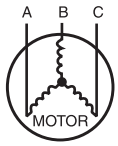

AB = 228 v
BC = 231 v
AC = 227 v

$$\text{Average Voltage} = \frac{228 + 231 + 227}{3} = \frac{686}{3} = 229$$

Determine maximum deviation from average voltage.
(AB) 229 - 228 = 1 v
(BC) 231 - 229 = 2 v
(AC) 229 - 227 = 2 v

Maximum deviation is 2 v.

Determine percent of voltage imbalance

$$\% \text{ Voltage Imbalance} = 100 \times \frac{2}{229} = 0.8\%$$

This amount of phase imbalance is satisfactory as it is below the maximum allowable 2%.

IMPORTANT: If the supply voltage phase imbalance is more than 2%, contact your local electric utility company immediately.

A06564

Connection Wiring Schematic 208/230-1-60

CONNECTION WIRING DIAGRAM
DANGER: ELECTRICAL SHOCK HAZARD DISCONNECT POWER BEFORE SERVICING

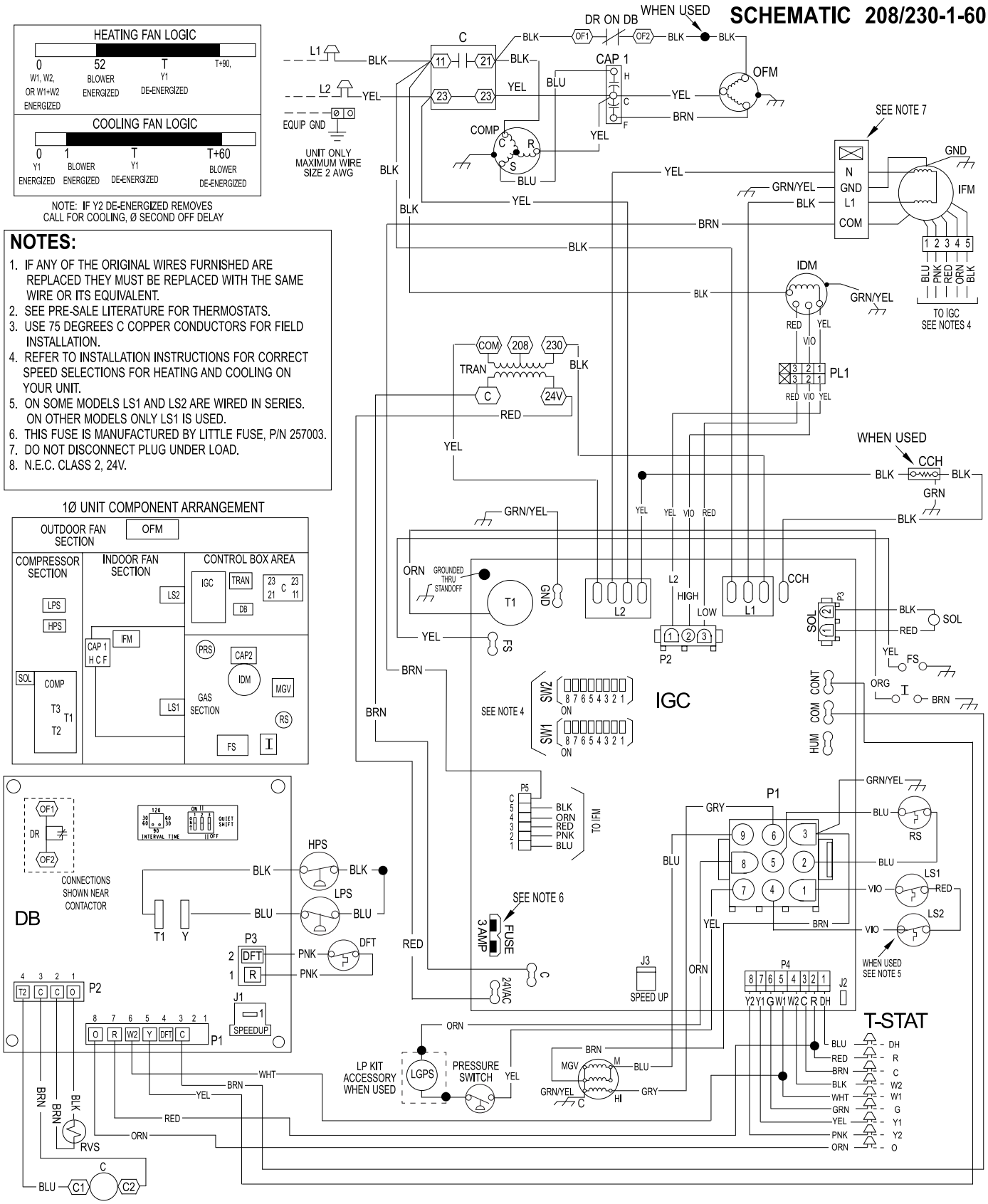

A230225

Ladder Wiring Schematic 208/230-1-60

LADDER WIRING DIAGRAM
DANGER: ELECTRICAL SHOCK HAZARD DISCONNECT POWER BEFORE SERVICING

LEGEND

	FIELD SPLICE	EQUIP	EQUIPMENT
	TERMINAL (MARKED)	FS	FLAME SENSOR
		GND	GROUND
	TERMINAL (UNMARKED)	HPS	HIGH PRESSURE SWITCH
	SPLICE	I	IGNITOR
		IDM	INDUCED DRAFT MOTOR
	SPLICE (MARKED)	IFM	INDOOR FAN MOTOR
		IGC	INTERGRATED GAS UNIT CONTROLLER
	FACTORY LO VOLTAGE		
	FIELD CONTROL WIRING	LGPS	LOW GAS PRESSURE SWITCH (WHEN USED)
	FIELD POWER WIRING	LPS	LOW PRESSURE SWITCH
	ACCESSORY OR OPTIONAL WIRING	LS1	PRIMARY LIMIT SWITCH
		LS2	SECONDARY LIMIT SWITCH
	FACTORY HI VOLTAGE	MGV	MAIN GAS VALVE
C	CONTACTOR	OFM	OUTDOOR FAN MOTOR
CAP1	CAPACITOR, COMP	OT	QUADRUPLE TERMINAL
CAP2	CAPACITOR, INDUCER	PL1	IGC TO INDUCER MOTOR PLUG
CCH	CRANKCASE HEATER	PL2	INDUCER MOTOR PLUG
COMP	COMPRESSOR MOTOR	RS	ROLLOUT SWITCH
DB	DEFROST BOARD	RVS	REVERSING VALVE
DR	DEFROST BOARD RELAY	SOL	COMPRESSOR SOLENOID
DFT	DEFROST TEMPERATURE SWITCH	TRAN	TRANSFORMER
		T-STAT	THERMOSTAT

DEFROST TIMING SELECTION

FIELD SELECTABLE OPTIONS FOR TIME PERIOD BETWEEN DEFROST CYCLES (MINUTES) FACTORY DEFROST SETTING IS 60 MIN.

SPEED UP — JUMPERED TEST PINS (USE METAL OBJECT) FIELD SPEED-UP CYCLE

1. DFT MUST BE CLOSED TO INITIATE DEFROST CYCLE. IF NECESSARY, REMOVE DFT CONNECTION BEFORE PLACING JUMPER ACCROSS DFT PINS.
2. AT THE SAME TIME DFT CLOSED, JUMPER "SPEED UP" PINS WITH SMALL SCREW DRIVER UNTIL DEFROST IS INITITATED. THEN REMOVE SCREW DRIVER.
3. SHORTED "SPEED UP" PINS WILL SPEED UP TIMER BY A FACTOR OF 256.

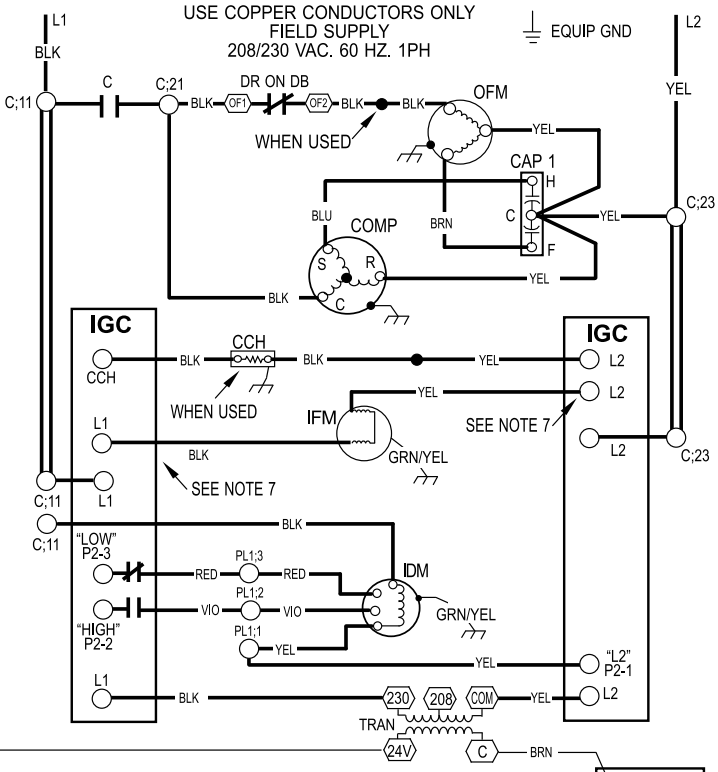

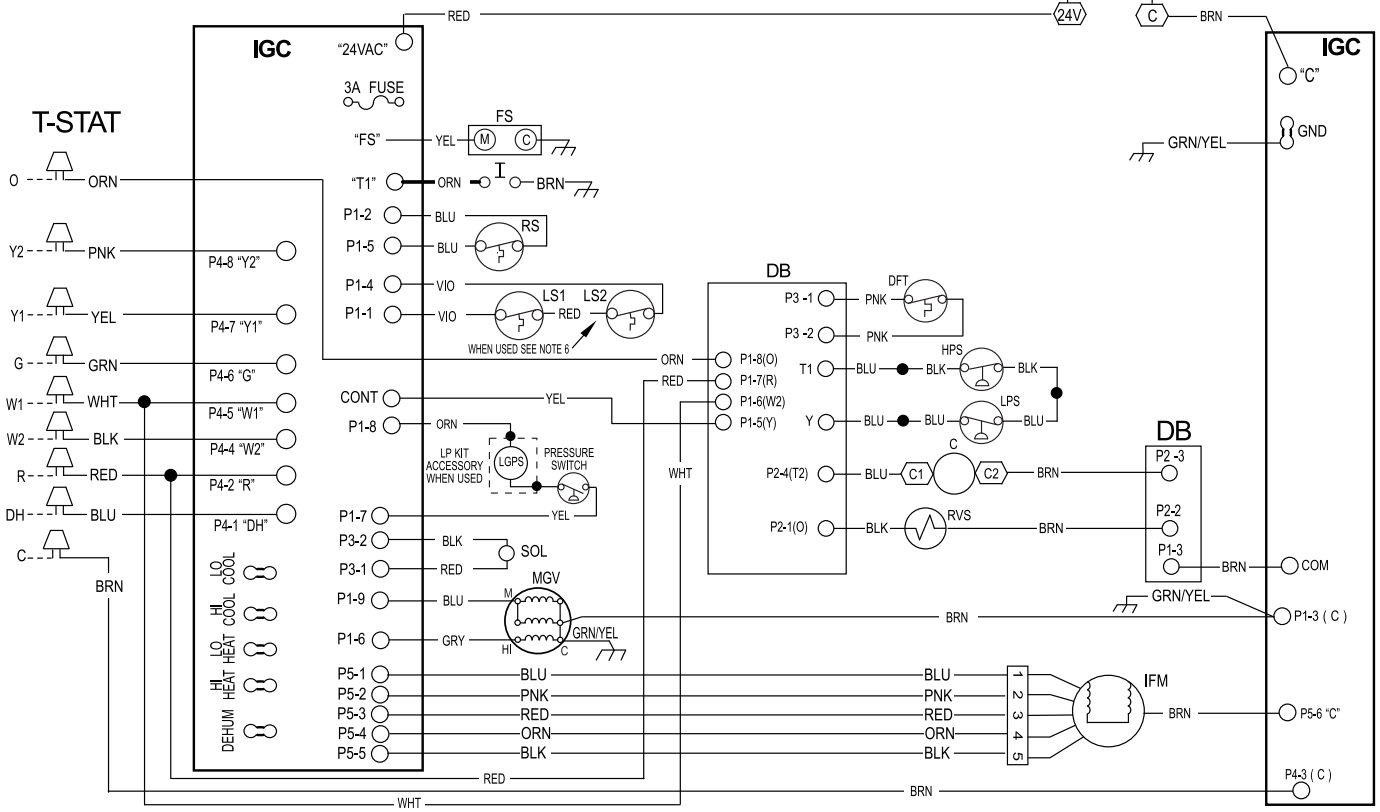

349853−701 REV. −

349853-701 REV. -

A230226

Controls

Operating Sequence

208/230 VAC Models:

On a call for low stage heating, terminal W1 on the thermostat is energized. On a call for high stage heating both terminals W1 and W2 are energized. Regardless of the stage of the heating call, the induced-draft motor is turned on to high speed for a 15 sec pre-purge time. After the pre-purge, when the pressure switch senses that sufficient combustion air is being moved by the induced-draft motor, the ignition sequence begins. The IGC will energize the sparker and the low stage gas valve solenoid. Upon sensing flame, the IGC will check the heating call. If W2 is not energized, the IGC will drop the induced-draft motor to low speed and maintain the gas valve on low stage. If W2 is energized, the IGC will maintain the induced-draft motor on high speed and energize the high stage gas valve solenoid. Thirty sec after flame is sensed the IGC will turn on the evaporator fan motor. If W2 is not energized, the evaporator fan motor will run on low heat speed. If W2 is energized, the evaporator fan motor will run on high heat speed. After the call for heat is satisfied, the IGC will run the evaporator fan motor an additional 90 sec. Please note that the IGC has the capability to automatically reduce the indoor fan motor on delay and increase the fan motor off delay in the event of high duct static and/or a partially-clogged filter.

Cooling Sequence of Operation

1. Continuous Fan
   a. Thermostat closes circuit R to G energizing the blower motor for continuous fan. The indoor fan is energized on low speed.
2. Cooling Mode
   a. Low Stage: Thermostat closes R to G, R to Y1 and R to O. The compressor and indoor fan are energized on low speed. The outdoor fan is also energized.
   b. High Stage: Thermostat closes R to G, R to Y1, R to Y2 and R to O. The compressor and indoor fan are energized on high speed. The outdoor fan is also energized.
3. Heat Pump Mode
   a. Low Stage: Thermostat closes R to G, R to Y1. The compressor and indoor fan are energized on low speed. The outdoor fan is also energized.
   b. High Stage: Thermostat closes R to G, R to Y1, R to Y2. The compressor and indoor fan are energized on high speed. The outdoor fan is also energized.
4. Defrost Mode
   a. Outdoor Fan is disabled, thermostat closes R to O and R to W1. Low stage gas heat tempers the leaving air. When defrost is complete, unit will return to heating mode. If room thermostat is satisfied during defrost, unit will shut down and restart in defrost on next call for heat.

NOTE: On units with a Time Guard® II device: Once the compressor has started and then stopped, it cannot be restarted again until 5 minutes have elapsed.

Guide Specifications

Packaged Gas Heating/Electric Cooling Units Constant Volume Application

HVAC Guide Specifications

Size Range: **2 to 5 Tons, Nominal Cooling 40,000 to 130,000 Btuh, Nominal Heating Input**

System Description

Outdoor rooftop or ground mounted air conditioner and gas furnace system utilizing a two-stage scroll compressor for cooling duty. Unit shall discharge supply air vertically or horizontally as shown on contract drawings. Outdoor fan/coil section shall have a draw-thru design with vertical discharge for minimum sound levels.

Quality Assurance

1. Unit shall be rated in accordance with AHRI Standards 210/240 and 270-1995.
2. Unit shall be designed in accordance with UL Standard 1995 and ANSI Z 21.47.
3. Unit shall be manufactured in a facility registered to ISO 9001 manufacturing quality standard.
4. Unit shall be UL listed and c-UL certified as a total package for safety requirements.
5. Roof curb shall be designed to conform to NRCA Standards.
6. Insulation and adhesives shall meet NFPA 90.1 requirements for flame spread and smoke generation.
7. Cabinet insulation shall meet ASHRAE Standard 62.2.

Delivery, Storage and Handling

Unit shall be stored and handled per manufacturer's recommendations.

Part 2 — Products

Equipment

General:

Factory-assembled, single-piece, heating and cooling unit. Contained within the enclosure shall be all factory wiring, piping, controls, refrigerant charge with R-410A refrigerant, and special features required prior to field start-up.

Unit Cabinet:

1. Unit cabinet shall be constructed of phosphated, zinc-coated, pre-painted steel capable of with-standing 500 hours in salt spray.
2. Normal service shall be through 3 removable cabinet panels.
3. The unit shall be constructed on a rust proof unit base that has an externally trapped, integrated sloped drain.
4. Evaporator fan compartment top surface shall be insulated with a minimum 1/2-in. (12.7 mm) thick, flexible fiberglass insulation, coated on the air side and retained by adhesive and mechanical means. The evaporator wall sections will be insulated with a minimum semi-rigid foil-faced board capable of being wiped clean. Aluminum foil-faced fiberglass insulation shall be used in the entire indoor air cavity section.
5. Unit shall have a field-supplied condensate trap.

Fans:

1. The evaporator fan shall be a multi-speed, direct-drive, as shown on equipment drawings.
2. Fan wheel shall be made from steel, be double-inlet type with forward curved blades with corrosion resistant finish. Fan wheel shall be dynamically balanced.
3. Condenser fan shall be direct drive propeller type with aluminum blades riveted to corrosion resistant steel spiders, be dynamically balanced, and discharge air vertically.

Compressor:

1. Fully hermetic compressors with factory-installed vibration isolation.
2. Two-stage scroll compressors shall be standard on all units.

Coils:

Evaporator and condenser coils shall have aluminum plate fins mechanically bonded to seamless tin-plated copper tubes with all joints brazed. Tube sheet openings shall be belled to prevent tube wear.

Heating Section:

1. Induced-draft combustion type with energy saving direct spark ignition system and redundant main gas valve.
2. Induced-draft motors shall provide adequate airflow for combustion.
3. The heat exchangers shall be constructed of stainless steel for corrosion resistance.
4. Burners shall be of the in-shot type constructed of aluminum coated steel.
5. All gas piping and electric power shall enter the unit cabinet at a single location.

Refrigerant Components:

Refrigerant expansion device shall be of the TXV (thermostatic expansion valve) type for cooling and fixed orifice for heating.

Filters:

Filter section shall consist of field-installed, throwaway, 1-in. (25 mm) thick fiberglass filters of commercially available sizes.

Controls and Safeties:

1. Unit controls shall be complete with a self-contained low voltage control circuit.
2. Compressors shall incorporate a solid-state compressor protector that provides reset capability.

Operating Characteristics:

1. Unit shall be capable of starting and running at 125°F (51°C) ambient outdoor temperature per maximum load criteria of AHRI Standard 210.
2. Compressor with standard controls shall be capable of operation down to 40°F (4°C) ambient outdoor temperature.
3. Units shall be provided with fan time delay to prevent cold air delivery before the heat exchanger warms up.
4. Unit shall be provided with fan time delay after the thermostat is satisfied.

Electrical Requirements:

All unit power wiring shall enter the unit cabinet at a single location.

Motors:

1. Compressor motors shall be of the refrigerant-cooled type with line-break thermal and current overload protection.
2. All fan motors shall have permanently lubricated bearings, and inherent, automatic reset, thermal overload protection.
3. Condenser fan motor shall be totally enclosed.
4. Evaporator Fan Motor to be multi-speed ECM blower motor.

Compressor Protection:

Solid-state control shall protect compressor by preventing "short cycling."

Low NOx:

Shall provide NOx reduction to meet 40 ng/J NOx emissions requirements as shipped from the factory.

Guide Specifications (Continued)

Special Option/Kits Available:

1. Compressor Start Kit (single phase units only):
   Shall provide additional starting torque for single-phase compressors.
2. Corporate Thermostat:
   To provide for one-stage heating and cooling in addition manual or automatic changeover and indoor fan control.
3. Crankcase Heater Kit:
   Shall provide anti-floodback protection for low-load cooling applications.
4. Economizer for two-stage operation:
   (Horizontal and Vertical with Jade Honeywell W7220 controller, Honeywell communicating actuator, and dry bulb sensor. (Contact MicroMetl Customer Service at 1-800-662-4822 to order.)
   NOTE: The enhanced dehumidification feature on high stage cooling does not support use of an economizer.
   a. Economizer controls capable of providing free cooling using outside air.
   b. Equipped with low leakage dampers not to exceed 3% leakage, at 1.0 IN. W.C. pressure differential.
   c. Spring return motor shuts off outdoor damper on power failure.
5. Filter Rack Kit:
   Shall provide filter mounting for downflow applications. Offered as a field installed accessory.
6. Flat Roof Curb Kit:
   Curbs shall have seal strip and a wood nailer for flashing and shall be installed per manufacturer's instructions.
7. Flue Discharge Deflector Kit
   Directs flue gas exhaust; 90 degrees upward from current discharge.
8. High Altitude Propane Conversion Kit:
   Shall consist of all required hardware to convert to propane gas heat operation at 2001 to 6000 ft (611 to 1829 m) above sea level.
9. Low Ambient Package Kit:
   Shall consist of a solid-state control and condenser coil temperature sensor for controlling condenser-fan motor operation, which shall allow unit to operate down to 0°F (-18°C) outdoor ambient temperature when properly installed.
10. Manual Outdoor Air Damper Kit:
    Package shall consist of damper, birdscreen, and rainhood which can be preset to admit outdoor air for year-round ventilation.
11. Natural-to-Propane Conversion Kit:
    Shall be complete with all required hardware to convert to propane gas operation at 10.0 IN. W.C. manifold pressure.
12. Propane-to-Natural Conversion Kit
    Shall be complete with all hardware to convert to natural gas at standard altitude (0 to 2000 ft [0 to 610 m] above sea level).
13. Square-To-Round Duct Transitions Kit (24-48 models):
    Shall have the ability to convert the supply and return openings from rectangular to round.

Training

My Learning Center is your central location for professional residential HVAC training resources that help strengthen careers and businesses. We believe in providing high quality learning experiences both online and in the classroom.

Access My Learning Center with your HVACpartners credentials at www.mlctraining.com. Please contact us a mylearning@carrier.com with questions.

© 2023 Carrier. All rights reserved.
Edition Date: 08/23

Catalog No: 48VR-14PD

Replaces: 48VR-13PD

Manufacturer reserves the right to change, at any time, specifications and designs without notice and without obligations.