Carrier®
HEATING & COOLING

Product Data

58MVP

Deluxe 4-Way Multipoise Direct-Vent Variable-Capacity Condensing Gas Furnace

Series 130
Input Capacities: 40,000 thru 120,000 Btuh

Variable capacity, the ultimate in heating comfort . . .

With the model 58MVP WeatherMaker™ Infinity Furnace, we've taken the ultimate in heating comfort and made it better.

The model 58MVP is available in 6 heat/airflow combinations. The unit has a 4-way multipoise design and can be installed in upflow, downflow, or horizontal positions covering up to 24 different applications.

The WeatherMaker Infinity achieves industry-leading ultra-high efficiency at up to 96.6 percent Annual Fuel Utilization Efficiency (AFUE). Efficient performance is enhanced through the variable-capacity design. To maintain ideal comfort, the control system of the WeatherMaker Infinity automatically adjusts, maximizing the use of low operating speeds that produce near silent furnace operation while meeting the exact heating needs. This unit is designed to keep the indoor temperature within 1 degree of the thermostat setpoint. Because it operates in low speed most of the time, the model 58MVP uses up to 80% less power than single-capacity furnaces.

In addition to providing optimum comfort, the model 58MVP has a sealed combustion system. This system brings combustion air from outdoors to the furnace and vents flue gases safely outside the home. Because it is sealed, operational noise is minimal. A sealed combustion system also means fewer cold drafts and less air infiltration.

Quality materials are the key behind the model 58MVP's outstanding performance. Carrier stands behind

Copyright 1998 Carrier Corporation

quality. We offer lifetime warranty protection* on the heat exchangers, the heart of the WeatherMaker Infinity. The microprocessor control center, the variable-speed inducer motor, and the variable-speed blower motor are all backed by a 5-year limited warranty. There is a 3-year warranty on hot surface ignition (HSI).

The versatile 4-way multipoise design in conjunction with variable capacity makes the 58MVP ideal for use with split-system cooling, including 2-speed units. A Carrier electronic air cleaner, humidifier, thermostat, comfort ventilator, and Comfort Zone™ will provide year-round comfort and efficiency.

Designed for durability, comfort, and reliability, the model 58MVP WeatherMaker Infinity is the ultimate in versatile, efficient comfort.

58MVP FEATURES/ BENEFITS

Variable Heating Capacity — On the coldest days of the year, the 58MVP Furnace has the capacity to heat your home. On moderate days when less heat is required, this furnace will regulate itself to a lower capacity — providing a comfortable home and minimizing operating costs.

Insulated Blower Compartment — The acoustical insulation reduces air and motor noise for quiet operation.

Certifications — The 58MVP units are A.G.A. and C.G.A. design certified for use with natural and propane gases. The furnace is factory-shipped for use with natural gas. An A.G.A./C.G.A. listed gas conversion kit is required to convert furnace for use with propane gas. The efficiency is GAMA efficiency rating certified. The 58MVP meets California Air Quality Management District emission requirements.

*See warranty information for details.

Venting — The combustion-air and vent pipes can terminate through a side wall or through the roof when used with a factory-authorized vent termination kit.

Blower Access Panel Switch — Automatically shuts off 115-v power to furnace whenever blower access panel is opened.

Reliable Heat Exchanger Design — The primary heat exchanger is made of aluminized steel for corrosion resistance.

The Serpentuff™ condensing heat exchanger cells are laminated with polypropylene for greater resistance to corrosion and epoxy coated externally to prevent oxidation. This break-through in heating technology helps extend the life of the furnace for years of dependable performance. The heat exchanger is positioned in the furnace to extract additional heat.

Warranty — The 58MVP heat exchangers come with a Limited Warranty for lifetime of original owner in single family residence; 20 years in other residential and commercial applications. Contact your dealer for details.

ICM Electronic Variable-Speed Motors — Motors (Integrated Control and Motor) provide variable-speed operation to optimize comfortlevels in the home. They are also more economical to operate than standardmotors. Motor and electronic controls are guaranteed by a 5-year Limited Warranty.

Microprocessor Control Center — The microprocessor control center features state-of-the-art combustion, temperature, and airflow control to maximize comfort while operating at peak efficiency.

Combustion control is obtained by taking the appropriate inducer motor RPM readings when the low- and high-fire pressure switches are made. Using this information, the microprocessor maintains a consistent air-to-fuel ratio independent of vent sizing and conditions.

The first cycle after power reset provides 16 minutes of low heat before switching to high heat unless the room thermostat has been satisfied. Subsequent thermostat cycles provide anywhere from 0 to 16 minutes of low heat depending on the length of the previous thermostat cycle.

Airflow control is accomplished by using a technique involving the microprocessor and blower motor. The static load on the air delivery system is measured each heating cycle. The microprocessor then uses this information to deliver correct airflow independent of variations in system restrictions. (For example, dirty filter or zone damper changes during a cycle.)

A special dehumidification function allows direct input from a thermidistat or humidistat. This input adjusts system airflow for greater humidity removal and increased cooling comfort during summer months.

Insulation — Foil-faced insulation in heat exchanger section of the casing minimizes heat loss.

Direct Vent Sealed Combustion System — Model 58MVP uses 100 percent outdoor air, which results in especially quiet operation. Direct venting minimizes the possibility of chloride contamination which can result in heat exchanger corrosion and also reduces air infiltration into the home.

Monoport Burners — The burners are finely tuned for smooth, quiet combustion and economical operation.

Bottom Closure — Factory-installed for side return; easily removable for bottom return.

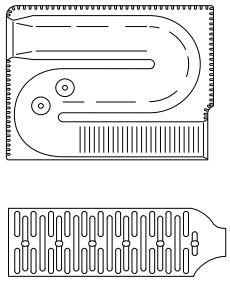
A92505

HEAT EXCHANGERS

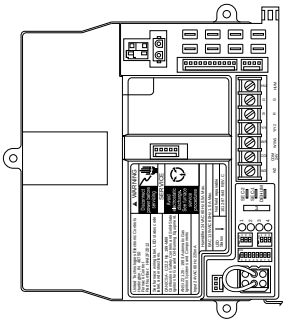
A95168

CONTROL CENTER

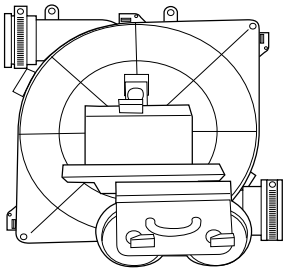
A93005

INDUCER ASSEMBLY

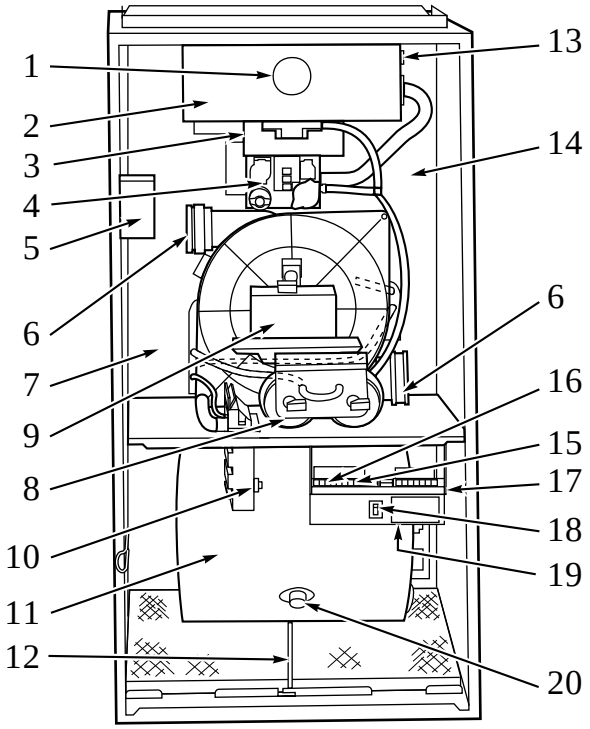

A96275

NOTES:

1. The 58MVP Furnace is built for use with natural gas. The furnace can be converted for propane gas with a factory-authorized and listed accessory conversion kit.
2. Control location and actual controls may be different than shown above.

1. Burner sight glass for viewing burner flame.
2. Burner assembly (inside). Operates with energy-saving, inshot burners and hot surface ignitor for safe, dependable heating.
3. Combustion-air intake connection to ensure contaminant-free air (right or left side).
4. Redundant 2-stage gas valve. Safe, efficient. Features 1 gas control with 2 internal shutoff valves.
5. Junction box for 115-v electrical power supply.
6. Vent outlet. Uses PVC pipe to carry vent gases from the furnace's combustion system (right or left side).
7. Secondary condensing heat exchanger (inside). Wrings out more heat through condensation. Constructed with Polypropylene-laminated steel to ensure durability.
8. Pressure switches ensure adequate flow of flue products through furnace and out vent system.
9. Inducer motor. Pulls hot flue gases through the heat exchangers, maintaining negative pressure for added safety.
10. Condensate drain connection. Collects moisture condensed during combustion process.
11. Heavy-duty blower. Circulates air across the heat exchangers to transfer heat into the home.
12. Air filter and retainer. May be used for side return application.
13. Rollout switch (manual reset) to prevent overtemperature.
14. Primary serpentine heat exchanger (inside). Stretches fuel dollars with the S-shaped heat-flow design. Solid construction of corrosion-resistant aluminized steel means reliability.
15. 3-amp fuse provides electrical and component protection.
16. Light emitting diodes (LEDs) on control center. Code lights are for diagnosing furnace operation and service requirements.
17. Control center.
18. Blower access panel safety interlock switch.
19. Transformer (24v) behind control center provides low-voltage power to furnace control center and thermostat.
20. Limit switch (manual reset).

Model number nomenclature

58MVP **040** **130** **14**

Deluxe 4-Way Multipoise Variable-Capacity Direct-Vent Condensing Gas Furnace

Input Capacity (Low/High)
040 — 26,000/40,000 Btuh
060 — 39,000/60,000 Btuh
080 — 52,000/80,000 Btuh
100 — 65,000/100,000 Btuh
120 — 78,000/120,000 Btuh

Series

Cooling Size Airflow
(400 CFM per 12,000 Btuh)
14 — 1400 CFM
20 — 2000 CFM

Carrier accessories*

UNIT SIZE	040-14	060-14	080-14	080-20	100-20	120-20
GAS CONVERSION KIT — NATURAL-TO-PROPANE*	KGANP25012SP					
GAS CONVERSION KIT — PROPANE-TO-NATURAL*	KGAPN20012SP					
DOWNFLOW BASE (For Combustible Floors)†	KGASB0201ALL					
VENT TERMINATION KIT (Bracket Only for 2 Pipes)	2-in. — KGAVT0101BRA 3-in. — KGAVT0201BRA					
CONCENTRIC TERMINATION KIT (Single Exit)	2-in. — KGAVT0501CVT 3-in. — KGAVT0601CVT					
CONDENSATE FREEZE PROTECTION KIT	KGAHT0101CFP					
SIDE FILTER RACK (Without Filter) Upflow Only‡	KGAFR0206ALL					
ADVANCED PRODUCT MONITOR	KGAFP0101APM					
ELECTRONIC AIR CLEANER (EAC)‡	Model AIRA					
MECHANICAL AIR CLEANER	Model 31MF					
HUMIDIFIER	Model 49BF, 49BG, 49FH, 49FP, or 49WS					
HEAT RECOVERY VENTILATOR	Model VA3B, VB5B, or VC5B					
ENERGY RECOVERY VENTILATOR	Model VL3A					
THERMOSTAT — NON-PROGRAMMABLE (Furnace Staging Determined by Furnace Control)	For Use with 1-Speed Air Conditioner — TSTATCCNAC01-A For Use with 2-Speed Air Conditioner — TSTATCCN2S01-A For Use with 2-Speed Heat Pump — TSTATCCN2S01-A					
THERMOSTAT — PROGRAMMABLE (Furnace Staging Determined by Furnace Control)	For Use with 1-Speed Air Conditioner — TSTATCCPAC01-A For Use with 2-Speed Air Conditioner — TSTATCCP2S01-A For Use with 1-Speed Heat Pump — TSTATCCPDF01-A For Use with 2-Speed Heat Pump — TSTATCCP2S01-A or TSTATCCPDF01-A					
THERMOSTAT — NON-PROGRAMMABLE (Furnace Staging Determined by Thermostat)	For Use with 1-Speed Air Conditioner — TSTATCCNHP01-A For Use with 2-Speed Air Conditioner — TSTATCCN2S01-A For Use with 2-Speed Heat Pump — TSTATCCN2S01-A					
THERMOSTAT — PROGRAMMABLE (Furnace Staging Determined by Thermostat)	For Use with 1-Speed Air Conditioner — TSTATCCPHP01-A For Use with 2-Speed Air Conditioner — TSTATCCP2S01-A For Use with 1-Speed Heat Pump — TSTATCCPDF01-A For Use with 2-Speed Heat Pump — TSTATCCP2S01-A or TSTATCCPDF01-A					
THERMIDISTAT	TSTATCCPRH01-A					
ZONING — 2 ZONE	ZONEKIT2ZCAR, ZONECC2KIT01					
ZONING — 4 ZONE	ZONECC4KIT01					
ZONING — 8 ZONE	ZONECC8KIT01					

* Factory-authorized and field-installed. Gas conversion kits are A.G.A. recognized.
† Required for installation on combustible floors when no coil box is used, or when any coil box other than a Carrier cased coil is used.
‡ An external filter is required for right-side return-air installations.

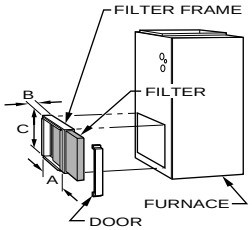

A93068

SIDE FILTER RACK

Custom-made filter rack for easy connection when as return plenum already exists. Provides easy access for cleaning filter.

Accepts one 16 x 25 x 1 in. filter. (Not included)

A	23-1/8 in.
B	2-3/8 in.
C	14-1/2 in.

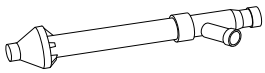

A93086

CONCENTRIC VENT

A concentric vent kit allows vent and combustion-air pipes to terminate through a single exit in a roof or side wall.

One pipe runs inside the other allowing venting through the inner pipe and combustion air to be drawn in through the outer pipe.

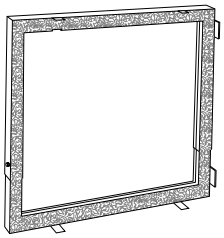

A88202

DOWNFLOW SUBBASE

One base fits all furnace sizes. The base is designed to be installed between the furnace and a combustible floor when no coil box is used or when a coil box other than a Carrier cased coil is used. It is A.G.A. design certified for use with Carrier 58MVP furnaces when installed in downflow applications.

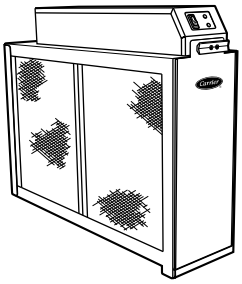

A97380

ELECTRONIC OR MECHANICAL AIR CLEANER

Cleans the air of smoke, dirt, and many pollens commonly found. Saves decorating and cleaning expenses by keeping carpets, furniture, and drapes cleaner.

Electronic air cleaner is shown.

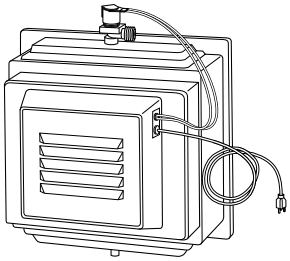

A91365

HUMIDIFIER

By adding moisture to winter-dry air, a Carrier humidifier can often improve comfort and keeps woodwork, wallpaper, and paint in better condition. Moisturizing household air also helps to retain normal body heat and provides comfort at lower temperatures.

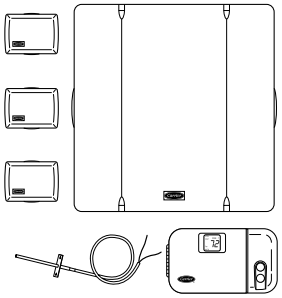

A97432

CONTROLS: THERMOSTATS AND ZONING

Available in programmable and non-programmable models, Carrier thermostats maintain a constant, comfortable temperature level in the home.

For the ultimate in home comfort, Carrier's 2-zone or 4-zone systems allow temperature control of individual "zones" of the home. This is accomplished through a series of electronic dampers and remote room sensors. The 4-zone system is shown.

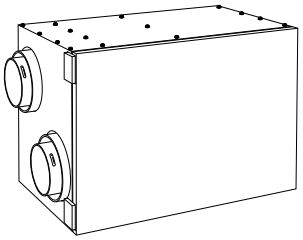

A94336

ENERGY/HEAT RECOVERY VENTILATOR

Carrier's energy or heat recovery ventilators exhaust stale indoor air and provide fresh outdoor air to the home while minimizing heat loss and humidity level. Especially useful for today's tighter constructed houses.

Energy recovery ventilator is shown.

Physical data

UNIT SIZE			040-14	060-14	080-14	080-20	100-20	120-20
OUTPUT CAPACITY BTUH* (ICS)	Low	Upflow	25,000	37,000	49,000	49,000	61,000	73,000
(Shaded capacities are		Downflow	25,000	36,000	49,000	49,000	61,000	73,000
specified on rating plate)		Horizontal	25,000	36,000	49,000	49,000	61,000	73,000
	High	Upflow	38,000	57,000	75,000	75,000	94,000	113,000
		Downflow	37,000	56,000	75,000	75,000	94,000	113,000
		Horizontal	37,000	56,000	75,000	75,000	93,000	112,000
INPUT BTUH†		Low	26,000	39,000	52,000	52,000	65,000	78,000
		High	40,000	60,000	80,000	80,000	100,000	120,000
SHIPPING WEIGHT (Lb)			205	170	182	204	203	234
CERTIFIED TEMP RISE RANGE (°F)		Low	35 — 45	60 — 70	60 — 70	60 — 70	60 — 70	60 — 70
		High	40 — 50	45 — 55	45 — 55	45 — 55	55 — 65	55 — 65
CERTIFIED EXT STATIC PRESSURE (ESP)		Heating	0.10	0.12	0.15	0.15	0.20	0.20
(In. wc)		Cooling	0.50	0.50	0.50	0.50	0.50	0.50
AIRFLOW CFM‡		Heating Low	565 (650**)	515 (590**)	690 (795**)	690 (795**)	860 (990**)	1035 (1190**)
		Heating High	780	1010	1345	1345	1425	1710
		Cooling (Max)	1400	1400	1400	2000	2000	2000
LIMIT CONTROL			SPST					
HEATING BLOWER CONTROL (Off Delay)			Selectable 90, 135, 180, or 225 Sec Intervals					
BURNERS (Monoport)			2	3	4	4	5	6
GAS CONNECTION SIZE			1/2-in. NPT					
GAS VALVE (Redundant) Manufacturer			White-Rodgers					
Minimum Inlet Pressure (In. wc)			4.5 (Natural Gas)					
Maximum Inlet Pressure (In. wc)			13.6 (Natural Gas)					
IGNITION DEVICE			Hot Surface					

* Capacity in accordance with U.S. Government DOE test procedures.
† Gas input ratings are certified for elevations to 2000 ft. For elevations above 2000 ft, reduce ratings 2% for each 1000 ft above sea level. In Canada, derate the unit 5% for elevations from 2000 to 4500 ft above sea level.
‡ Air delivery above 1800 CFM requires that both sides, a combination of 1 side and bottom, or bottom only of the furnace be used for return air. A filter is required for each return-air supply.
** Low heat CFM when bypass humidifier switch (SW-3) on control center is used.
ICS — Isolated Combustion System

MEETS DOE RESIDENTIAL CONSERVATION SERVICES PROGRAM STANDARDS.

Before purchasing this appliance, read important energy cost and efficiency information available from your retailer.

As an ENERGY STAR[SM] Partner, Carrier Corporation has determined that this product meets the ENERGY STAR guidelines for energy efficiency.

APPROVALS
ISO 9001
EN 29001
BS 5750 PART 1
ANSI/ASQC Q91

CERTIFICATE NO. FM 29652

REGISTERED QUALITY SYSTEM

Performance data

UNIT SIZE	040-14	060-14	080-14	080-20	100-20	120-20
DIRECT-DRIVE MOTOR Hp (ICM)	1/2	1/2	1/2	1	1	3/4
MOTOR FULL LOAD AMPS	7.7	7.7	7.7	12.4	12.4	9.6
RPM (Nominal) — SPEEDS	Variable 250 — 1300					
BLOWER WHEEL DIAMETER x WIDTH (In.)	11 x 10	10 x 7	11 x 10	11 x 10	11 x 10	11 x 10
FILTER SIZE (In.) NOMINAL (Washable)	(2) 16 x 25 x 1	(1) 16 x 25 x 1	(1) 20 x 25 x 1	(1) 20 x 25 x 1	(1) 20 x 25 x 1	(2) 16 x 25 x 1

ICM — Integrated Control and Motor

EFFICIENCY

UNIT SIZE			040-14	060-14	080-14	080-20	100-20	120-20
CAPACITY BTUH* (ICS)	Low	Upflow	25,000	37,000	49,000	49,000	61,000	73,000
(Shaded capacities are		Downflow	25,000	36,000	49,000	49,000	61,000	73,000
specified on rating plate)		Horizontal	25,000	36,000	49,000	49,000	61,000	73,000
	High	Upflow	38,000	57,000	75,000	75,000	94,000	113,000
		Downflow	37,000	56,000	75,000	75,000	94,000	113,000
		Horizontal	37,000	56,000	75,000	75,000	93,000	112,000
AFUE%*		Upflow	96.6	94.1	94.1	94.1	94.1	94.1
		Downflow	95.0	92.7	92.7	92.7	92.7	92.7
		Horizontal	96.1	93.7	93.7	93.7	93.7	93.7

* Ratings in accordance with U.S. Government DOE test procedures.
ICS — Isolated Combustion System

AIR DELIVERY — CFM (With Filter)* AND POWER DRAW (WATTS)**

UNIT SIZE	OPERATING MODE	AIRFLOW CFM	External Static Pressure Range*	External Static Pressure (ESP)							
				0.1	0.2	0.3	0.4	0.5	0.6	0.7	0.8
040-14				**Power Draw (WATTS)****							
	Low Heat	565 (650†)	0–0.26	59	79	94					
	High Heat	780	0–0.49	96	123	149	172	197			
	1-1/2 A/C Setting	600	0–0.29‡	64	84	99					
	2-Ton A/C Setting	800	0–0.51	102	129	155	179	204	230		
	2-1/2-Ton A/C Setting	1000	0–0.80	164	191	225	256	292	321	354	396
	3-Ton A/C Setting	1200	0–0.80	255	294	328	367	404	447	485	524
	3-1/2-Ton A/C Setting	1400	0–0.43††	386	433	483	528	544	551	555	560
060-14											
	Low Heat	515 (590†)	0–0.21	56	68	88					
	High Heat	1010	0–0.80	177	199	237	263	283	315	352	375
	1-1/2 A/C Setting	600	0–0.29‡	68	88	106					
	2-Ton A/C Setting	800	0–0.51‡	118	136	156	179	198	223		
	2-1/2-Ton A/C Setting	1000	0–0.80	174	196	232	259	279	309	348	370
	3-Ton A/C Setting	1200	0–0.80	266	294	338	358	395	427	453	498
	3-1/2-Ton A/C Setting	1400	0–0.52††	387	415	456	507	548	560	560	560
080-14											
	Low Heat	690 (795†)	0–0.26	73	92	107					
	High Heat	1345	0–0.64	311	342	383	428	469	510	535	535
	1-1/2 A/C Setting	600	0–0.20‡	59	78						
	2-Ton A/C Setting	800	0–0.36‡	92	109	124	137				
	2-1/2-Ton A/C Setting	1000	0–0.56‡	128	167	208	237	268	299		
	3-Ton A/C Setting	1200	0–0.80‡	232	261	297	336	371	408	437	483
	3-1/2-Ton A/C Setting	1400	0–0.55††	345	377	427	470	513	535	535	535
080-20											
	Low Heat	690 (795†)	0–0.25	93	111	132					
	High Heat	1345	0–0.80	343	376	416	457	503	535	570	613
	2-Ton A/C Setting	800	0–0.34‡	114	136	163	189				
	2-1/2-Ton A/C Setting	1000	0–0.53‡	175	200	232	264	295	324		
	3-Ton A/C Setting	1200	0–0.76‡	263	294	333	365	404	429	474	506
	3-1/2-Ton A/C Setting	1400	0–0.80	375	410	457	501	544	579	629	679
	4-Ton A/C Setting	1600	0–0.80	524	579	631	691	733	791	832	883
	5-Ton A/C Setting	2000	0–0.32††	947	1034	1103	1110	1110	1110	1110	1073
100-20											
	Low Heat	860 (990†)	0–0.34	105	121	138	161				
	High Heat	1425	0–0.80	299	340	385	419	464	500	540	573
	2-Ton A/C Setting	800	0–0.29‡	96	112	127					
	2-1/2-Ton A/C Setting	1000	0–0.46‡	130	154	176	194	220			
	3-Ton A/C Setting	1200	0–0.66‡	191	220	253	284	326	357	395	
	3-1/2-Ton A/C Setting	1400	0–0.80	286	322	369	403	447	481	522	556
	4-Ton A/C Setting	1600	0–0.80	410	468	507	544	588	642	678	720
	5-Ton A/C Setting	2000	0–0.37††	788	836	903	962	954	938	927	916
120-20											
	Low Heat	1035 (1190†)	0–0.34	140	168	194	219				
	High Heat	1710	0–0.80	474	519	562	601	652	690	735	780
	2-Ton A/C Setting	800	0–0.20‡	89	111						
	2-1/2-Ton A/C Setting	1000	0–0.32‡	133	156	182	207				
	3-Ton A/C Setting	1200	0–0.46‡	194	229	257	286	314			
	3-1/2-Ton A/C Setting	1400	0–0.62‡	281	319	354	393	423	458	495	
	4-Ton A/C Setting	1600	0–0.80	397	441	473	518	562	597	638	682
	5-Ton A/C Setting	2000	0–0.30††	740	799	824	835	846	861	872	888

* Actual external static pressure (ESP) can be determined by using the fan laws (CFM ^{2} proportional to ESP); such as, a system with 1010 CFM at 0.5 ESP would operate at cooling airflow of 800 CFM at 0.31 ESP and low-heating airflow of 515 CFM at 0.13 ESP. (See air delivery curves.)

† Low heat CFM when bypass humidifier switch (SW3) on control center is used. The listed low-heating wattage is with bypass humidifier switch (SW3) OFF.

‡ Ductwork must be sized for high-heat CFM within the operational range of ESP.

** Wattage data provided is for the circulating blower and does not include draft inducer, accessories, or gas controls.

†† Refer to the air delivery curves for airflow CFM above this ESP

AIR DELIVERY CURVE — 040-14

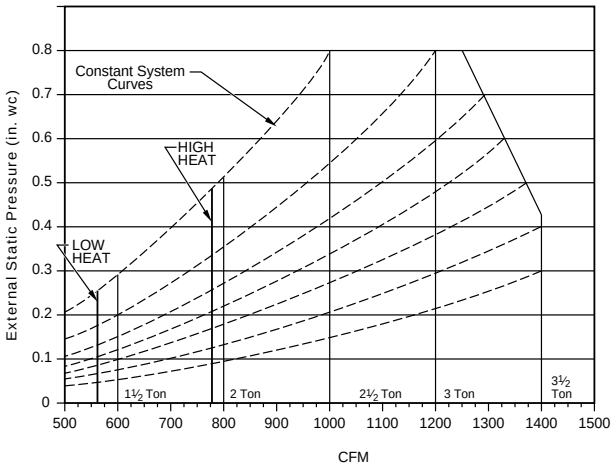

A93074

AIR DELIVERY CURVE — 060-14

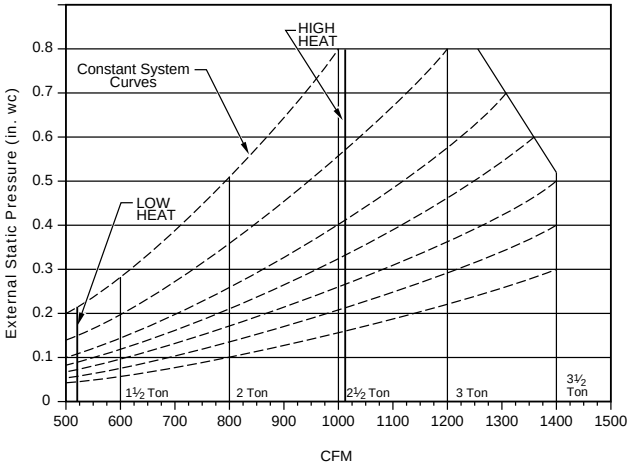

A97319

AIR DELIVERY CURVE — 080-14

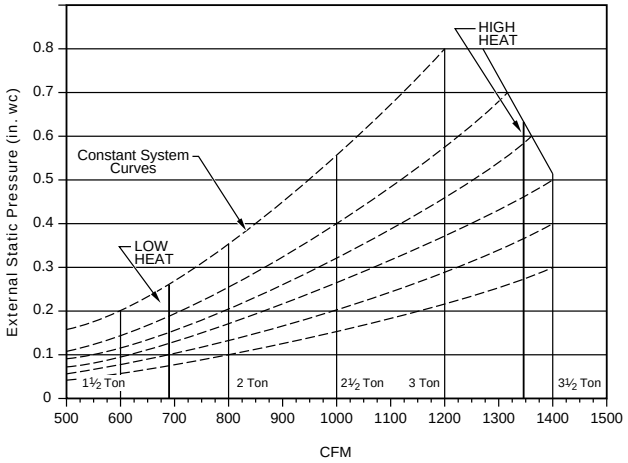

A97320

AIR DELIVERY CURVE — 080-20

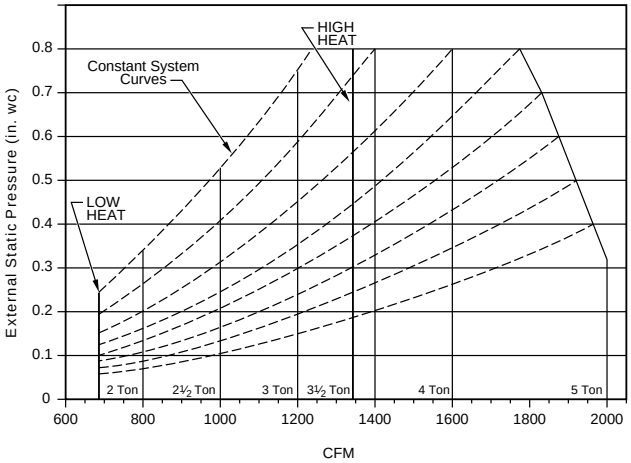

A97321

AIR DELIVERY CURVE — 100-20

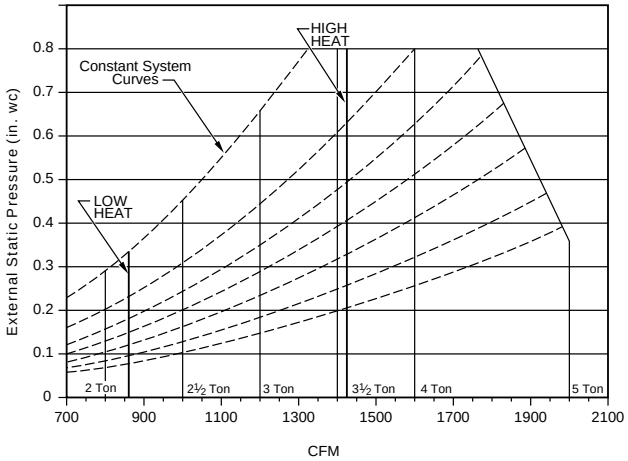

A97322

AIR DELIVERY CURVE — 120-20

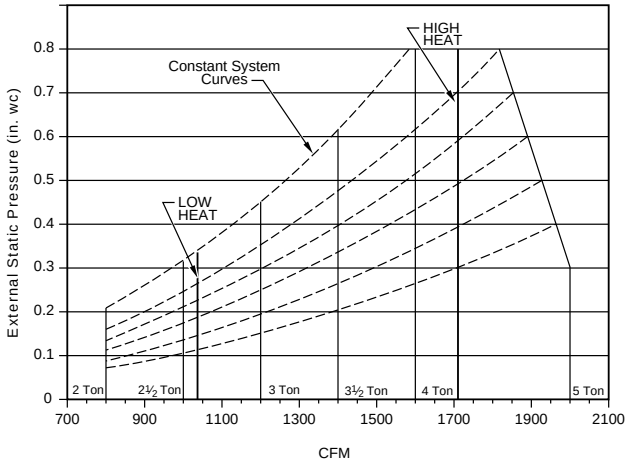

A97323

Dimensions

CONCENTRIC VENT

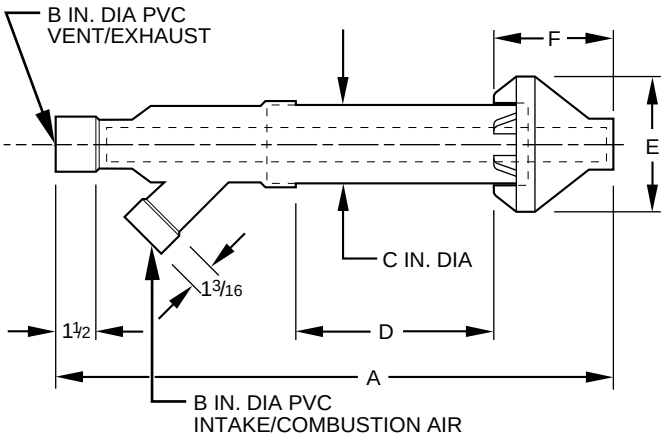

A97110

DIMENSIONS (in.)

KIT PART NO.	A*	B	C	D†	E	F
KGAVT0501CVT	33-3/8	2	3-1/2	16-5/8	6-1/4	5-3/4
KGAVT0601CVT	38-7/8	3	4-1/2	21-1/8	7-3/8	6-1/2

* Dimension A will change accordingly as dimension D is lengthened or shortened.

† Dimension D may be lengthened to 60 in. maximum. Dimension D may also be shortened by cutting the pipes provided in the kit to 12 in. minimum.

CONDENSATE TRAP

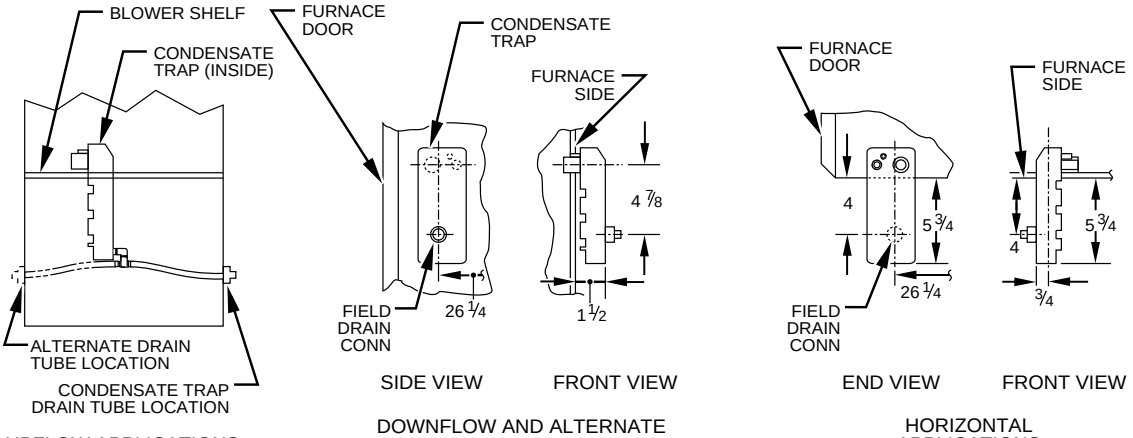

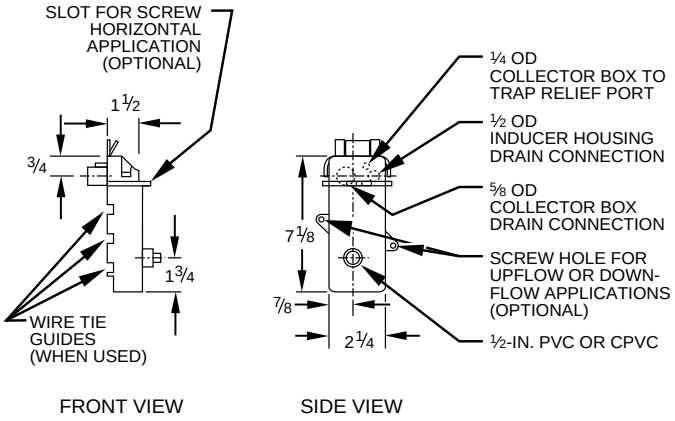

A93026

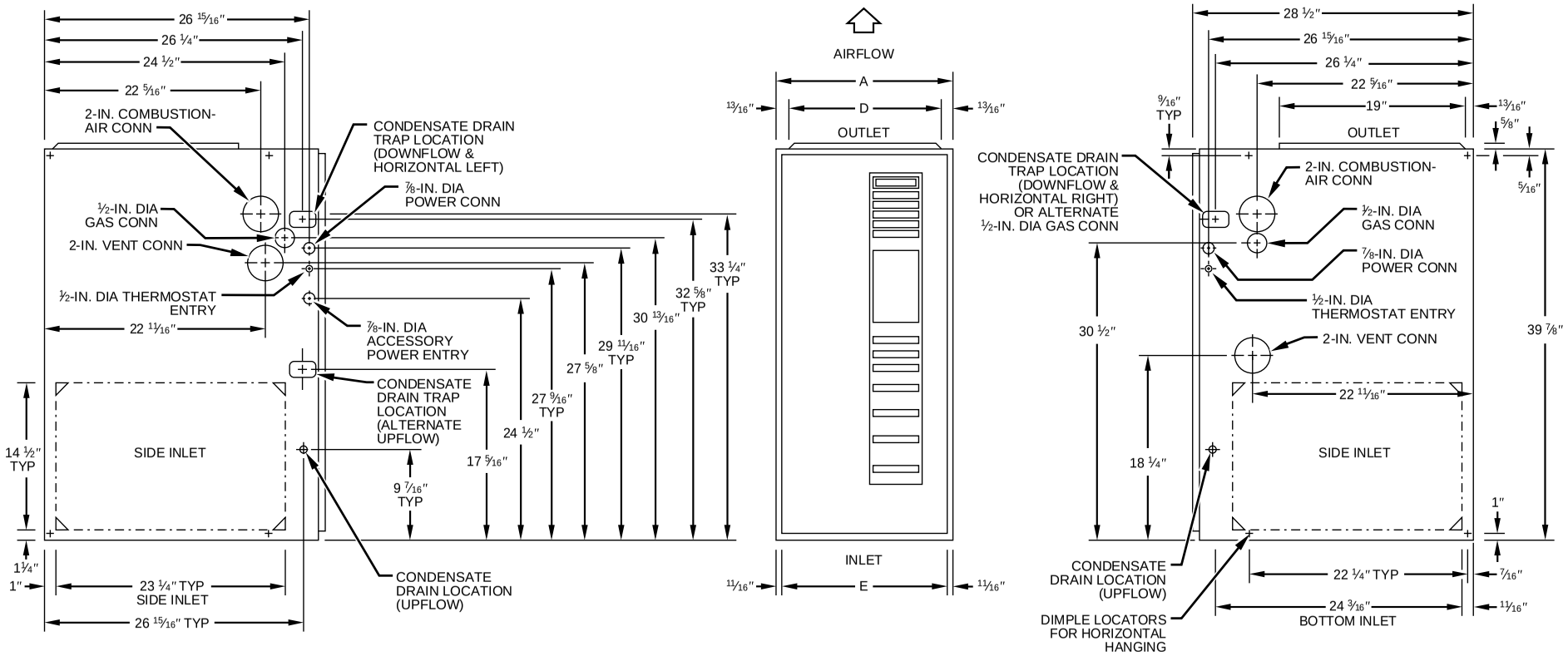

NOTES: Minimum return-air opening at furnace:

1. For 800 CFM--16-In. round or 14 1/2 x 12-In. rectangle.
2. For 1200 CFM--20-In. round or 14 1/2 x 19 1/2-In. rectangle.
3. For 1600 CFM--22-In. round or 14 1/2 x 23 1/4-In. rectangle.
4. For airflow requirements above 1800 CFM, use both side inlets, a combination of 1 side inlet and the bottom, or the bottom only.

DIMENSIONS (In.)

UNIT SIZE	A	D	E
040-14*	24-1/2*	22-7/8*	23*
060-14	17-1/2	15-7/8	16
080-14	21	19-3/8	19-1/2
080-20	21	19-3/8	19-1/2
100-20	21	19-3/8	19-1/2
120-20	24-1/2	22-7/8	23

* These dimensions reflect the wider casing for the 96.6% AFUE furnace.

DOWNFLOW SUBBASE — DIMENSIONS (In.)

FURNACE CASING WIDTH	FURNACE IN DOWNFLOW APPLICATION	PLENUM OPENING*		FLOOR OPENING		HOLE NO. FOR WIDTH ADJUSTMENT
		A	B	C	D	
17-1/2	Furnace with or without CD5 or CK5 Coil Assembly or KCAKC Coil Box	15-1/8	19	16-3/4	20-3/8	3
21	Furnace with or without CD5 or CK5 Coil Assembly or KCAKC Coil Box	18-5/8	19	20-1/4	20-3/8	2
24-1/2	Furnace with or without CD5 or CK5 Coil Assembly or KCAKC Coil Box	22-1/8	19	23-3/4	20-3/8	1

* The plenum should be constructed 1/4-in. smaller in width and depth than the plenum dimensions shown above.

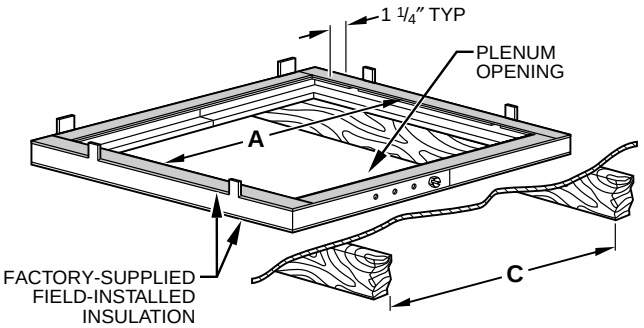

A97427

Assembled

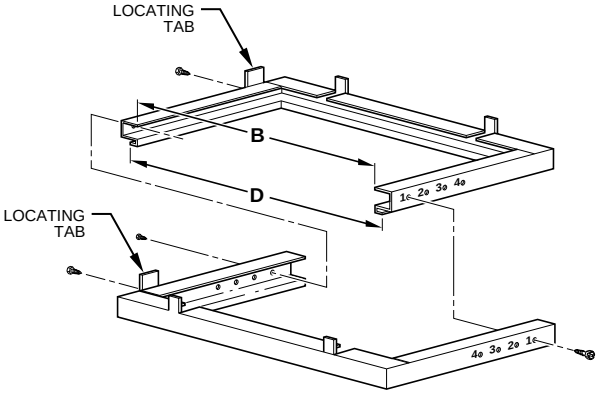

A88207

Disassembled

Electrical data

UNIT SIZE		040-14	060-14	080-14	080-20	100-20	120-20
UNIT VOLTS — HERTZ — PHASE		115 — 60 — 1					
OPERATING VOLTAGE RANGE (Min — Max)*		104 — 127					
MAXIMUM UNIT AMPS		8.9	8.9	8.9	13.8	13.8	11.6
UNIT AMPACITY†		12.0	12.0	12.0	17.9	18.1	15.3
MINIMUM WIRE SIZE		14	14	14	12	12	12
MAXIMUM WIRE LENGTH (Ft)‡		31	31	31	32	32	37
MAXIMUM FUSE SIZE OR CKT BKR (Amps)**		15	15	15	20	20	20
TRANSFORMER (24v)		40va					
EXTERNAL CONTROL POWER AVAILABLE	Heating	25va					
	Cooling	34va					
AIR CONDITIONING BLOWER RELAY		Standard					

* Permissible limits of the voltage range at which the unit will operate satisfactorily.
† Unit ampacity = 125% of largest operating component's full load amps plus 100% of all other potential operating component's (EAC, humidifier, etc.) full load amps.
‡ Length shown is as measured 1 way along wire path between unit and service panel for maximum 2% voltage drop.
** Time-delay type is recommended.

Typical wiring schematic

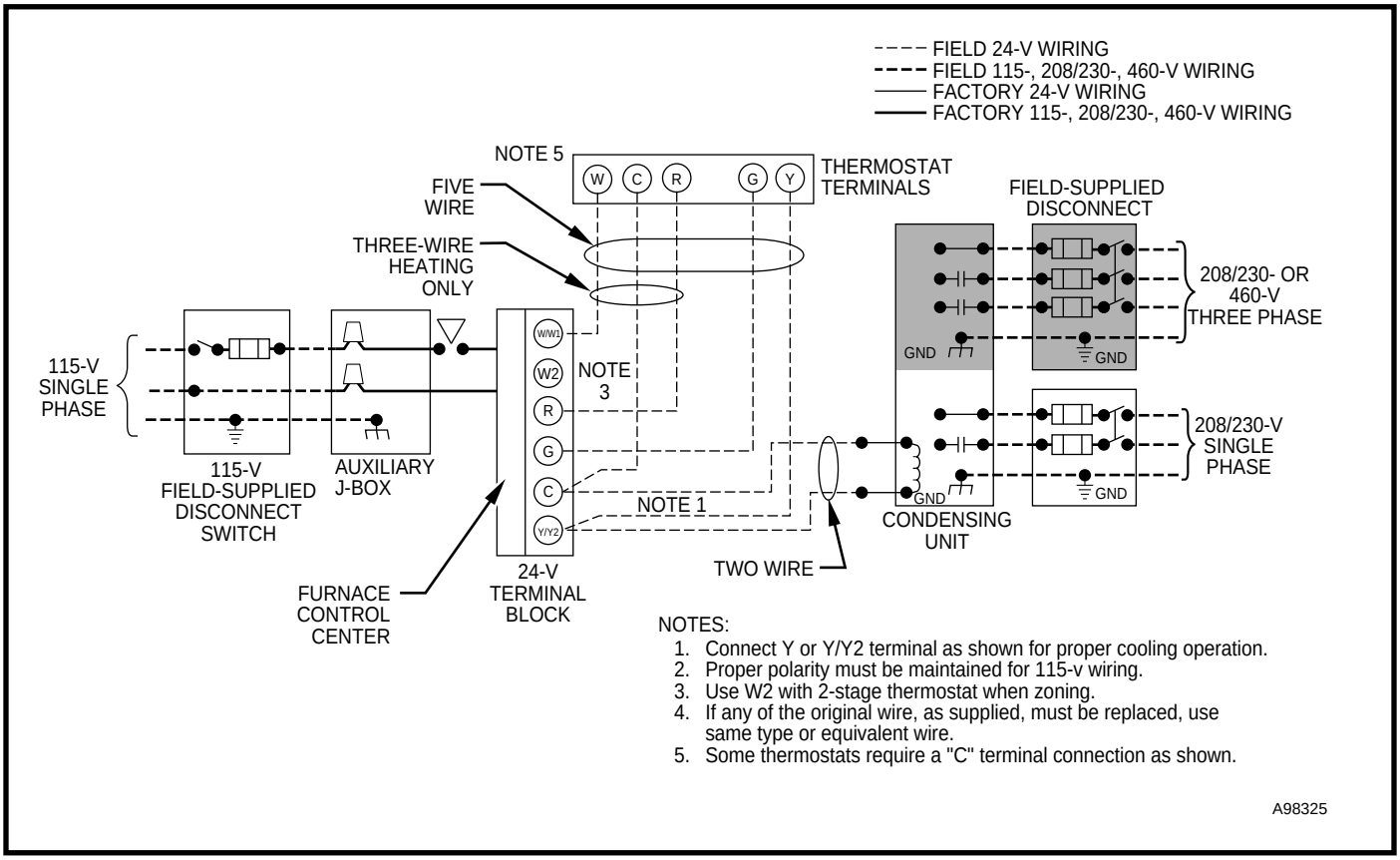

Combustion-air and vent piping

MAXIMUM ALLOWABLE PIPE LENGTH (FT)

ALTITUDE ABOVE SEA LEVEL (FT)	UNIT SIZE	TERMINATION TYPE	PIPE DIA (IN.)*	NUMBER OF 90° ELBOWS					
				1	2	3	4	5	6
0 to 2000	040-14	2 Pipe or 2-In. Concentric	1-1/2	50	45	40	35	30	25
			2	70	70	70	70	70	70
	060-14	2 Pipe or 2-In. Concentric	1-1/2	50	45	40	35	30	25
			2	70	70	70	70	70	70
	080-14 080-20	2 Pipe or 2-In. Concentric	1-1/2	30	25	20	15	10	5
			2	70	70	70	70	70	70
	100-20	2 Pipe or 2-In. Concentric	2	45	40	35	30	25	20
			2-1/2	70	70	70	70	70	70
	120-20	2 Pipe or 3-In. Concentric	2-1/2	10	NA	NA	NA	NA	NA
			3	35	30	15	NA	NA	NA
			3†	70	70	70	70	70	70
2001 to 3000	040-14	2 Pipe or 2-In. Concentric	1-1/2	45	40	35	30	25	20
			2	70	70	70	70	70	70
	060-14	2 Pipe or 2-In. Concentric	1-1/2	45	40	35	30	25	20
			2	70	70	70	70	70	70
	080-14 080-20	2 Pipe or 2-In. Concentric	1-1/2	26	21	16	11	6	NA
			2	70	70	70	70	70	70
	100-20	2 Pipe or 2-In. Concentric	2	40	35	30	25	20	15
			2-1/2	70	70	70	70	70	70
	120-20	2 Pipe or 3-In Concentric	3	31	26	12	NA	NA	NA
			3†	63	62	62	61	61	61
3001 to 4000	040-14	2 Pipe or 2-In. Concentric	1-1/2	42	37	32	27	22	17
			2	70	70	70	70	70	70
	060-14	2 Pipe or 2-In. Concentric	1-1/2	42	37	32	27	22	17
			2	70	70	70	70	70	70
	080-14 080-20	2 Pipe or 2-In. Concentric	1-1/2	25	20	15	10	5	NA
			2	70	70	70	70	70	70
	100-20	2 Pipe or 2-In. Concentric	2	38	33	28	23	18	13
			2-1/2	70	70	70	70	70	70
	120-20	2 Pipe or 3-In. Concentric	3	29	24	10	NA	NA	NA
			3†	59	59	58	57	57	56
4001 to 5000‡	040-14	2 Pipe or 2-In. Concentric	1-1/2	40	35	30	25	20	15
			2	70	70	70	70	70	70
	060-14	2 Pipe or 2-In. Concentric	1-1/2	40	35	30	25	20	15
			2	70	70	70	70	70	70
	080-14 080-20	2 Pipe or 2-In. Concentric	1-1/2	23	18	13	8	NA	NA
			2	70	70	70	70	70	68
	100-20	2 Pipe or 2-In. Concentric	2	36	31	26	21	16	11
			2-1/2	70	70	70	70	70	70
	120-20	2 Pipe or 3-In. Concentric	3†	56	55	54	53	52	52
5001 to 6000‡	040-14	2 Pipe or 2-In. Concentric	1-1/2	37	32	27	22	17	12
			2	70	70	70	70	70	70
	060-14	2 Pipe or 2-In. Concentric	1-1/2	37	32	27	22	17	12
			2	70	70	70	70	70	70
	080-14 080-20	2 Pipe or 2-In. Concentric	1-1/2	22	17	12	7	NA	NA
			2	70	70	70	70	68	63
	100-20	2 Pipe or 2-In. Concentric	2	33	28	23	18	13	8
			2-1/2	70	70	70	70	70	70
	120-20	2 Pipe or 3-In. Concentric	3†	53	52	50	49	48	47

See notes on pg. 15.

MAXIMUM ALLOWABLE PIPE LENGTH (FT) Continued

ALTITUDE ABOVE SEA LEVEL (FT)	UNIT SIZE	TERMINATION TYPE	PIPE DIA (IN.)*	NUMBER OF 90° ELBOWS					
				1	2	3	4	5	6
6001 to 7000‡	040-14	2 Pipe or 2-In. Concentric	1-1/2	35	30	25	20	15	10
			2	70	70	68	67	66	64
	060-14	2 Pipe or 2-In. Concentric	1-1/2	35	30	25	20	15	10
			2	70	70	68	67	66	64
	080-14 080-20	2 Pipe or 2-In. Concentric	1-1/2	20	15	10	5	NA	NA
			2	70	70	68	67	62	57
	100-20	2 Pipe or 2-In. Concentric	2	31	26	21	16	11	6
			2-1/2	70	70	68	67	66	64
	120-20	2 Pipe or 3-In. Concentric	3†	49	48	47	45	44	43
7001 to 8000‡	040-14	2 Pipe or 2-In. Concentric	1-1/2	32	27	22	17	12	7
			2	66	65	63	62	60	59
	060-14	2 Pipe or 2-In. Concentric	1-1/2	32	27	22	17	12	7
			2	66	65	63	62	60	59
	080-14 080-20	2 Pipe or 2-In. Concentric	1-1/2	18	13	8	NA	NA	NA
			2	66	65	63	62	57	52
	100-20	2 Pipe or 2-In. Concentric	2	29	24	19	14	9	NA
			2-1/2	66	65	63	62	60	59
	120-20	2 Pipe or 3-In. Concentric	3†	46	44	43	41	40	38
8001 to 9000‡	040-14	2 Pipe or 2-In. Concentric	1-1/2	30	25	20	15	10	5
			2	62	60	58	56	55	53
	060-14	2 Pipe or 2-In. Concentric	1-1/2	30	25	20	15	10	5
			2	62	60	58	56	55	53
	080-14 080-20	2 Pipe or 2-In. Concentric	1-1/2	17	12	7	NA	NA	NA
			2	62	60	58	56	51	46
	100-20	2 Pipe or 2-In. Concentric	2	27	22	17	12	7	NA
			2-1/2	62	60	58	56	55	53
	120-20	2 Pipe or 3-In. Concentric	3†	43	41	39	37	35	34
9001 to 10,000‡	040-14	2 Pipe or 2-In. Concentric	1-1/2	27	22	17	12	7	NA
			2	57	55	53	51	49	47
	060-14	2 Pipe or 2-In. Concentric	1-1/2	27	22	17	12	7	NA
			2	57	55	53	51	49	47
	080-14 080-20	2 Pipe or 2-In. Concentric	1-1/2	15	10	5	NA	NA	NA
			2	57	55	53	51	46	41
	100-20	2 Pipe or 2-In. Concentric	2	24	19	14	9	NA	NA
			2-1/2	57	55	53	51	49	47
	120-20	2 Pipe or 3-In. Concentric	3†	39	37	35	33	31	29

* Disk usage — Unless otherwise stated, use perforated disk assembly (factory-supplied in loose parts bag).
† Wide radius elbow.
‡ Vent sizing for Canadian installations above 4500 ft (1370m) above sea level are subject to acceptance by the local authorities having jurisdiction.
NA — Not Allowed; pressure switch will not make.

NOTES:

1. Do not use pipe size greater than those specified in table or incomplete combustion, flame disturbance, or flame sense lockout may occur.
2. Size both the combustion-air and vent pipe independently, then use the larger diameter for both pipes.
3. Assume two 45° elbows equal one 90° elbow. Long radius elbows are desirable and may be required in some cases.
4. Elbows and pipe sections within the furnace casing and at the vent termination should not be included in vent length or elbow count.
5. The minimum pipe length is 5 ft for all applications.

MAXIMUM ALLOWABLE EXPOSED VENT PIPE LENGTH (FT) WITH INSULATION IN WINTER DESIGN TEMPERATURE AMBIENT*

UNIT SIZE	WINTER DESIGN TEMP °F	MAX PIPE DIA (IN.)	INSULATION THICKNESS (IN.)†				
			0	3/8	1/2	3/4	1
040-14	20	2	21	37	42	50	57
	0	2	10	22	25	30	35
	- 20	2	5	14	17	21	25
060-14	20	2	30	55	61	70	70
	0	2	16	33	38	46	53
	- 20	2	9	23	26	33	38
080-14 080-20	20	2	37	65	70	70	70
	0	2	20	39	45	55	63
	- 20	2	11	27	31	39	45
100-20	20	2-1/2	41	70	70	70	70
	0	2-1/2	21	42	48	59	68
	- 20	2-1/2	11	28	33	41	49
120-20	20	3	49	70	70	70	70
	0	3	26	51	58	70	70
	- 20	3	15	35	40	50	59

* Pipe length (ft) specified for maximum vent pipe lengths located in unconditioned spaces. Vent pipes located in unconditioned space cannot exceed the total allowable pipe length as specified in the Maximum Allowable Pipe Length table.

† Insulation thickness based on R value of 3.5 per in.

Clearance to combustibles

This forced air furnace is equipped for use with natural gas at altitudes 0 - 10,000 ft (0 - 3,050m), except 140 size Furnaces are only approved for altitudes 0 - 7,000 ft. (0 - 2,135m).

An accessory kit, supplied by the manufacturer, shall be used to convert to propane gas use or may be required for some natural gas applications.

This furnace is for indoor installation in a building constructed on site. This furnace may be installed in a manufactured (mobile) home when stated on rating plate and using factory authorized kit.

This furnace may be installed on combustible flooring in alcove or closet at minimum clearance from combustible material.

This appliance requires a special venting system. Refer to the installation instructions for parts list and method of installation. This furnace is for use with schedule-40 PVC, PVC-DWV, or ABS-DWV pipe, and must not be vented in common with other gas-fired appliances. Construction through which vent/air intake pipes may be installed is maximum 24 inches (600 mm), minimum 3/4 inches (19 mm) thickness (including roofing materials).

MINIMUM INCHES CLEARANCE TO COMBUSTIBLE CONSTRUCTION

ALL POSITIONS:

* Mimimum front clearance for service 30 inches (762mm).

†† 140 size furnaces require 1 inch back clearance to combustible materials.

DOWNFLOW POSITIONS:

† For installation on combustible floors only when installed on special base No. KGASB0201ALL, Coil Assembly, Part No. CD5 or CK5, or Coil Casing, Part No. KCAKC.

HORIZONTAL POSITIONS:

§ Clearance shown is for air inlet and air outlet end.

Line contact is permissible only between lines formed by intersections of top and two sides of furnace jacket, and building joists, studs, or framing.

Ø 120 and 140 size Furnaces require 1 inch bottom clearance to combustible materials.

323857-101 REV. C (LIT)

This furnace is approved for UPFLOW, DOWNFLOW and HORIZONTAL installations.

Clearance arrows do not change with furnace orientation.

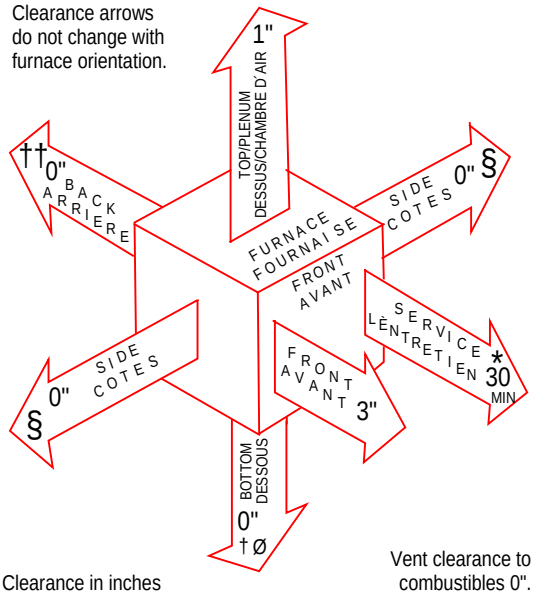

Clearance in inches

Vent clearance to combustibles 0".

A97609

Typical installations

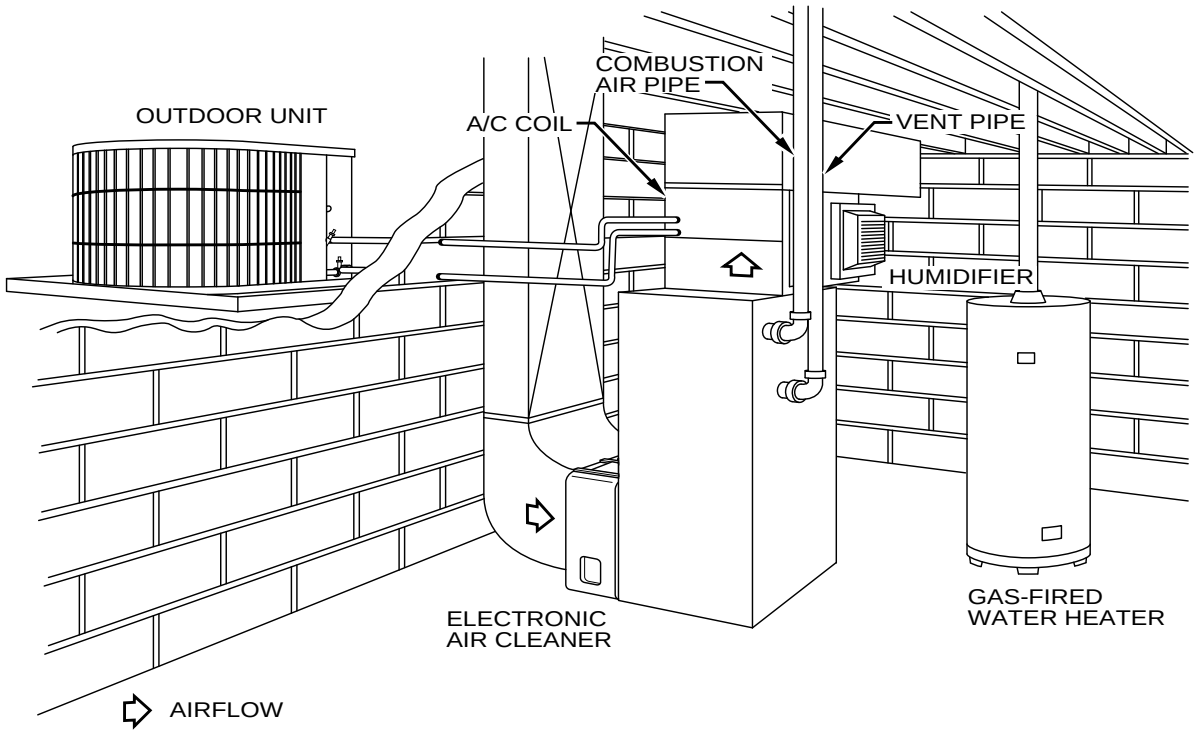

Basement — Upflow Application

A93063

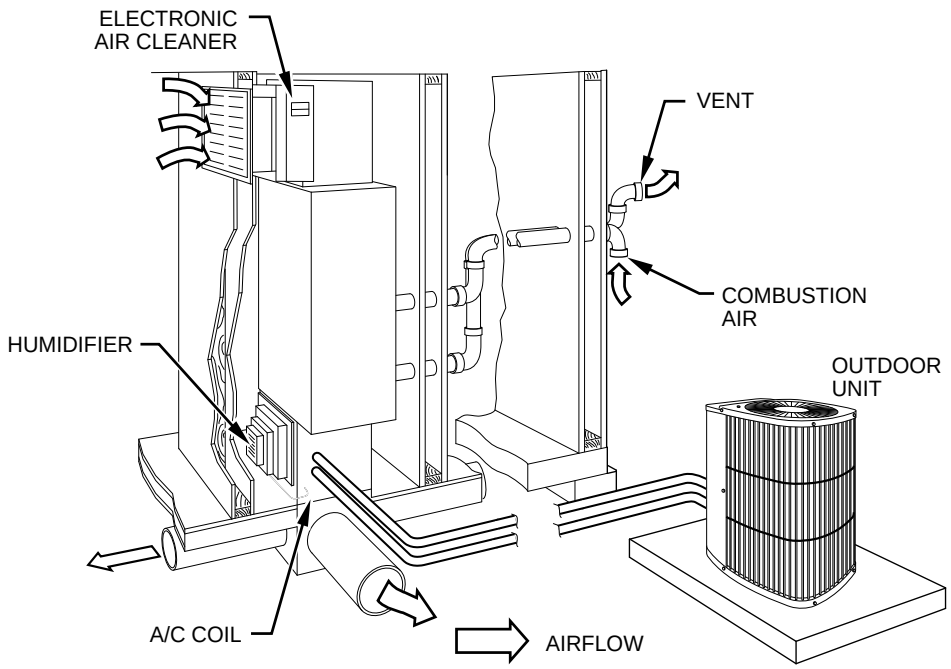

Closet — Downflow Application

A93064

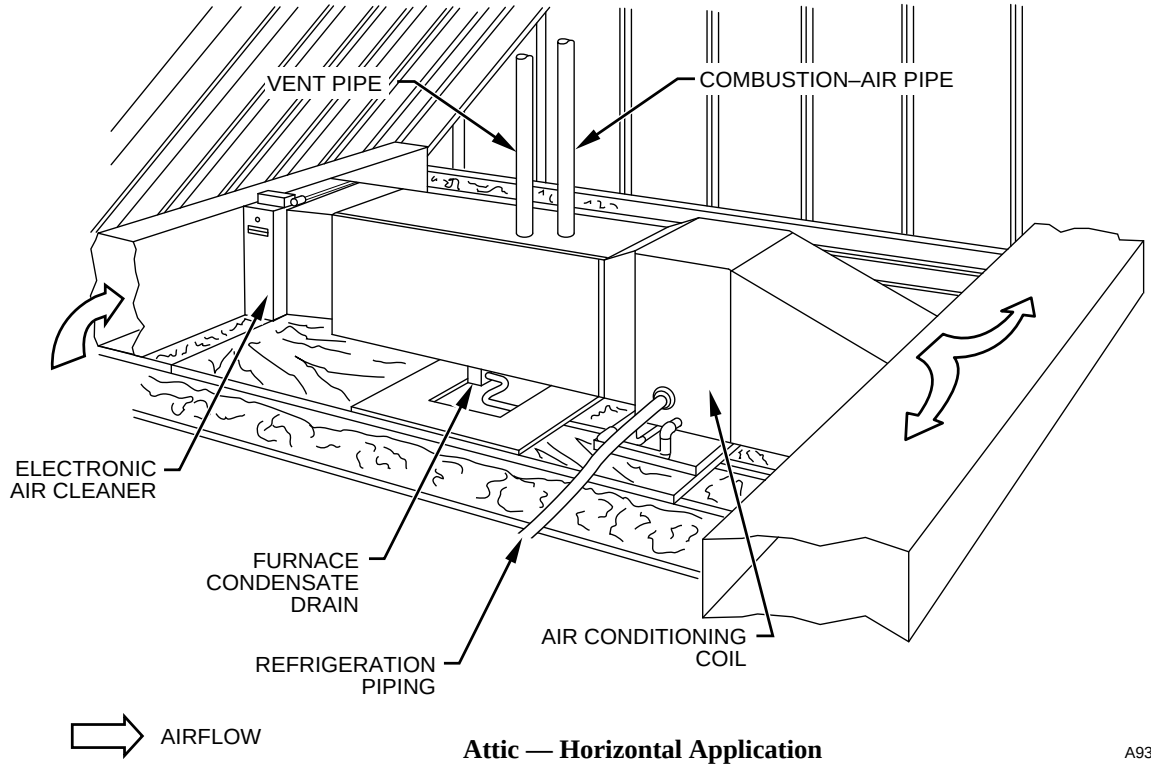

Attic — Horizontal Application

A93065

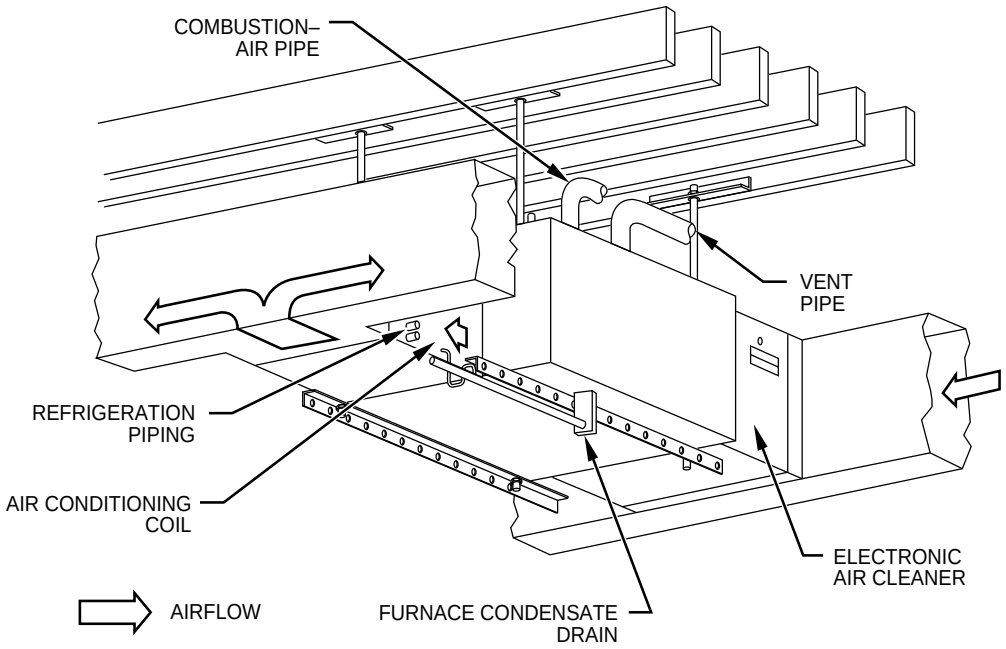

Crawlspace — Horizontal Application

A93066

SERVICE TRAINING

Packaged Service Training programs are an excellent way to increase your knowledge of the equipment discussed in this manual, including:

- Unit Familiarization
- Maintenance
- Installation Overview
- Operating Sequence

A large selection of product, theory, and skills programs is available, using popular video-based formats and materials. All include video and/or slides, plus companion book.

Classroom Service Training plus "hands-on" the products in our labs can mean increased confidence that really pays dividends in faster troubleshooting, fewer callbacks. Course descriptions and schedules are in our catalog.

CALL FOR FREE CATALOG 1-800-962-9212

[ ] Packaged Service Training [ ] Classroom Service Training

A94328

Copyright 1998 Carrier Corporation • Indianapolis, IN 46231

Carrier
A United Technologies Company

Manufacturer reserves the right to discontinue, or change at any time, specifications or designs without notice and without incurring obligations.