58TP0B/58TP1B
Performance™ Two-Stage, Variable 25-Speed, Non-Communicating, Non-Condensing, Gas Furnace with InteliSense™ Technology

Carrier®
Turn to the experts

Product Data

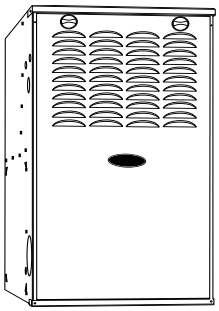

A190411

Representative drawing only. Some product models may vary.

⚠ WARNING

This furnace is not designed for use in mobile homes, trailers, or recreational vehicles. Such use could result in property damage and/or death.

The 58TP0/58TP1 Two-Stage, Variable 25-speed, 4-way Multipoise Gas Furnaces offer unmatched comfort in their class with ComfortHeat® technology in an 80% AFUE gas furnace. You get the benefits of a ComfortHeat® technology furnace: reduced drafts, reduced sound levels, longer cycles, less temperature swings between cycles, and less temperature differences between rooms. Its exclusive, intelligent microprocessor control adapts to the heating needs of the home by automatically adjusting high and low heat times to maximize comfort. The 58TP0/58TP1 furnaces are approved for use with natural or propane gas. 58TP1 - Low NOx units are designed for California installations and can be installed in air quality management districts with a 40 ng/J NOx emissions limit.

Performance SERIES Certified System ISO 9001 Quality
AHRI CERTIFIED www.ahridirectory.org
Use of the AHRI Certified Mark indicates a manufacturer's participation in the program. For verification of certification for individual products, go to www.ahridirectory.org.

A200315

PERFORMANCE

- ComfortHeat® Technology Intelligent microprocessor control
- Two-stage heating with single-stage thermostat with patented Adaptive Control Technology
- Lower operating sound through low-stage operation and QuieTech™ system
- Microprocessor based control center
- Enhanced diagnostics with easy to read 3 digit display for faults and status and reflective sight glass.
- Adjustable heating air temperature rise
- Adjustable cooling airflow
- Stores fault codes during power outages
- Power Heat™ Igniter
- Draft Safeguard switch designed to ensure proper furnace venting
- Insulated blower compartment
- Inner door for tighter sealing
- Variable 25-speed, constant torque ECM blower motor
  Increased SEER ratings for AC and HP systems as compared to the Air Conditioning Heating and Refrigeration Institute's standard coil-only rating when paired with selected Carrier evaporator coils.
- Noise reduction combustion system

INSTALLATION FLEXIBILITY

- Four-position furnace: Upflow, Horizontal Right, Horizontal Left, Downflow, 13 different vent options
- On-board NFC antenna makes setup a tap away when using the Carrier service technician app
- 4-way Multipoise furnace, 13 vent applications
- Compact design - only 33-1/3 in. (847 mm) tall

APPLICATIONS

- SmartEvap™ Humidity control when using a Thermidistat™ control
- SmartEvap™ can lower the humidity level in the home by nearly 10 percent
- Comfort Fan™ adjustable constant fan speed from a compatible thermostat
- All models are Chimney friendly when used with accessory vent kit
- Twinning capable with accessory kit (sizes 070V17--16, 090V17--16, 090V21--20, 110V21--22, and 135V24--22)
- HYBRID HEAT® Dual Fuel System compatible

CERTIFICATION

- Cabinet air leakage less than 2.0% at 1.0 in. w.c. and cabinet air leakage less than 1.4% at 0.5 in. w.c. when tested in accordance with ASHRAE standard 193
- Residential installations eligible for consumer financing through the Retail Credit Program

LIMITED WARRANTY*

- Default 5-year parts limited warranty
- 20-year heat exchanger limited warranty
  10-year parts limited warranty with timely registration*

\- Equipment must be registered within 90 days of original installation, except in jurisdictions where warranty benefits cannot be conditioned on registration.

* Applies to original purchaser/homeowner, some limitations may apply. For residential applications only. See warranty certificate for complete details and restrictions, including warranty coverage of other applications.

InteliSense™ TECHNOLOGY

A230254

This furnace is InteliSense capable when used with an ecobee for Carrier smart thermostat with InteliSense technology. InteliSense technology allows for the collection of performance data to be sent to the cloud. Utilizing Carrier's digital tools, dealers can gather system settings and equipment data, with homeowner opt-in, to provide quicker and more efficient service.

UNIT PERFORMANCE DATA

Model	Input (BTUh)	Efficiency AFUE	Cooling Capacity CFM range	Dimensions H x W x D In (mm)	Shipping Wt. Lbs (Kg)
045V14--12	44,000	80%	185-1345	33-1/3 x 14-3/16 x 29 (847 x 360x 737)	114 (51.7)
070V14--12	66,000	80%	220-1340	33-1/3 x 14-3/16 x 29 (847 x 360x 737)	119 (54.0)
070V17--16	66,000	80%	260-1715	33-1/3 x 17-1/2 x 29 (847 x 445 x 737)	134 (60.8)
090V17--16	88,000	80%	340-1480	33-1/3 x 17-1/2 x 29 (847 x 445 x 737)	139 (63.0)
090V21--20	88,000	80%	330-2285	33-1/3 x 21 x 29 (847 x 533 x 737)	149 (67.6)
110V21--22	110,000	80%	375-2345	33-1/3 x 21 x 29 (847 x 533 x 737)	155 (70.3)
135V24--22	135,000	80%	365-2325	33-1/3 x 24-1/2 x 29 (847 x 622x 737)	173 (78.5)

DIMENSIONAL DATA

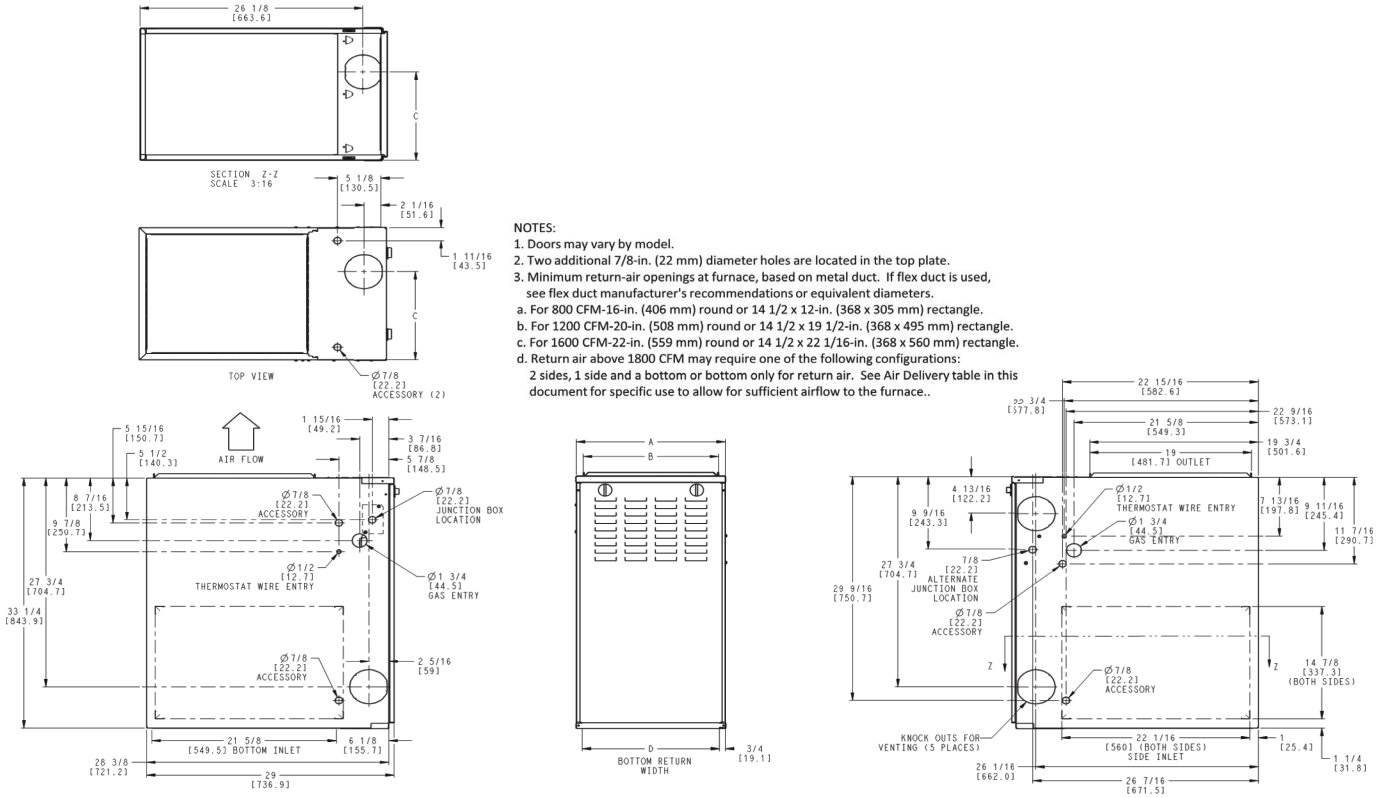

NOTES:
1. Doors may vary by model.
2. Two additional 7/8-in. (22 mm) diameter holes are located in the top plate.
3. Minimum return-air openings at furnace, based on metal duct. If flex duct is used, see flex duct manufacturer's recommendations or equivalent diameters.
a. For 800 CFM-16-in. (406 mm) round or 14 1/2 x 12-in. (368 x 305 mm) rectangle.
b. For 1200 CFM-20-in. (508 mm) round or 14 1/2 x 19 1/2-in. (368 x 495 mm) rectangle.
c. For 1600 CFM-22-in. (559 mm) round or 14 1/2 x 22 1/16-in. (368 x 560 mm) rectangle.
d. Return air above 1800 CFM may require one of the following configurations: 2 sides, 1 side and a bottom or bottom only for return air. See Air Delivery table in this document for specific use to allow for sufficient airflow to the furnace..

NOTE: ALL DIMENSIONS IN INCH (MM)

U.S. ECCN: Not Subject to Regulation (N.S.R.)

A210785

Dimensions

FURNACE SIZE	A CABINET WIDTH	B OUTLET WIDTH	C TOP AND BOTTOM FLUE COLLAR	D BOTTOM INLET WIDTH	VENT CONNECTION SIZE	SHIP WT. LB (KG)
045V14--12	14-3/16 (360)	12-9/16 (319)	9-5/16 (237)	12-11/16 (322)	4 (102)	114 (51.7)
070V14--12	14-3/16 (360)	12-9/16 (319)	9-5/16 (237)	12-11/16 (322)	4 (102)	119 (54.0)
070V17--16	17-1/2 (445)	15-7/8 (403)	11-9/16 (294)	16 (406)	4 (102)	134 (60.8)
090V17--16	17-1/2 (445)	15-7/8 (403)	11-9/16 (294)	16 (406)	4 (102)	139 (63.0)
090V21--20	21 (533)	19-3/8 (492)	13-5/16 (338)	19-1/2 (495)	4 (102)	149 (67.6)
110V21--22	21 (533)	19-3/8 (492)	13-5/16 (338)	19-1/2 (495)	4 (102)	155 (70.3)
135V24--22	24-1/2 (622)	22-7/8 (581	15-1/16 (383)	23 (584)	4 (102)*	173 (78.5)

*. 135 size furnaces require a 5 or 6-in. (127 or 152 mm) vent. Use a vent adapter between furnace and vent stack. See Installation Instructions for complete installation requirements.

Manufacturer reserves the right to change, at any time, specifications and designs without notice and without obligations.

MODEL NUMBER NOMENCLATURE

1, 2 Gas Furnace	3 Heating Stages	4 Tier	5 Min. AFUE/NOx	6 Major Series	7, 8, 9 Heating Input	10 Motor Type	11, 12 Width	13 Voltage (1-phase)	14 Minor Series	15, 16 Airflow
59	M	N	7	B	060	E	17	1	1	16
58 = 80% Non-Condensing 59 = 90%+ Condensing	M = Modulating T = Two Stage S = Single Stage C = Single Stage Communicating	B = Base C = Comfort E = Export N = Infinity P = Performance U = Ultra Low Nox	0 = 80% 1 = 80% Low NOx (Not Ultra Low NOx) 2 = 92% 5 = 95% 6 = 96% 7 = 97% 8 = 98%	A B C ---	026 = 26,000 BTU 040 = 40,000 BTU 060 = 60,000 BTU --- 155 = 155,000 BTU	C = Constant Airflow Variable- Speed (VCA) ECM V = Variable-Speed (VCT) PWM M = Multi 18-Speed Constant Torque (MCT) ECM	14 - 14.2" 17 - 17.5" 21 - 21.0" 24 - 24.5"	1 = 110V/60Hz 2 = 230V/50Hz	1 2 3 ---	08 = 800 CFM 10 = 1000 CFM 12 =1200 CFM 14 = 1400 CFM 16 = 1600 CFM 20 = 2000 CFM 22 = 2200 CFM

A220581

FURNACE COMPONENTS

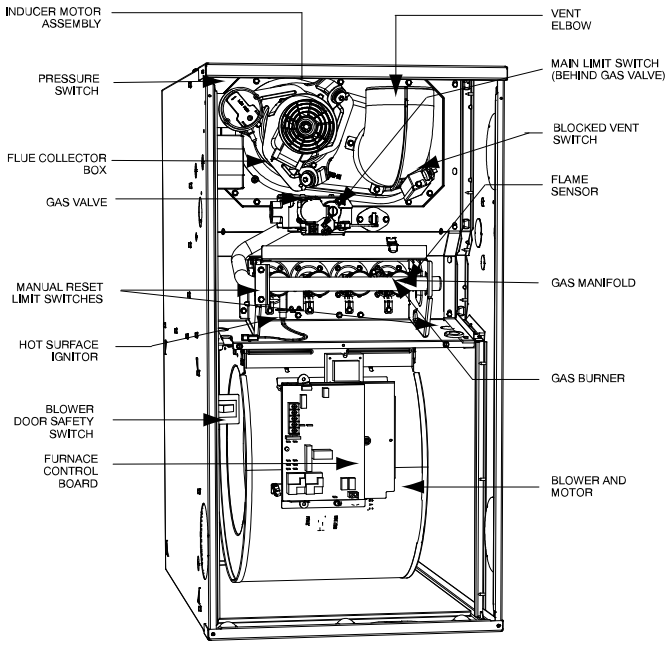

A190086

NOTE: The furnaces are factory shipped for use with natural gas. These furnaces can be field-converted for propane gas with a factory-authorized and listed accessory conversion kit.

CLEARANCES

⚠ WARNING — **ELECTRIC SHOCK AND MOVING PARTS HAZARD**
High voltage and rotating fan blades may be present in blower compartment when door switch is pressed. Keep hands clear.

⚠ WARNING
FIRE, EXPLOSION, ASPHYXIATION HAZARD

Improper adjustment, alteration, service, maintenance, or installation can cause serious injury or death.

Read and follow instructions and precautions in User's Information Manual provided with this furnace. Installation and service must be performed by a qualified service agency or the gas supplier.

⚠ CAUTION

Check entire gas assembly for leaks after lighting this appliance.

INSTALLATION

1. This furnace must be installed in accordance with the manufacturer's instructions and local codes. In the absence of local codes, follow the National Fuel Gas Code ANSI Z223.1 / NFPA54 or CSA B-149. 1 Gas Installation Code.
2. This furnace must be installed so there are provisions for combustion and ventilation air. See manufacturer's installation information provided with this appliance.

OPERATION

This furnace is equipped with manual reset limit switch(es) in burner compartment to protect against overheat conditions that can result from inadequate combustion air supply or blocked vent conditions.

1. Do not bypass limit switches.
2. If a limit opens, call a qualified serviceman to correct the condition and reset limit switch.

INSTALLATION

MINIMUM INCHES CLEARANCE TO COMBUSTIBLE CONSTRUCTION

This forced air furnace is equipped for use with natural gas at altitudes 0 - 10,000 ft (0 - 3,050m).

An accessory kit, supplied by the manufacturer, shall be used to convert to propane gas use or may be required for some natural gas applications.

This furnace is for indoor installation in a building constructed on site.

This furnace may be installed on combustible flooring in alcove or closet at minimum clearance as indicated by the diagram from combustible material.

This furnace may be used with a Type B-1 Vent and may be vented in common with other gas fired appliances.

This furnace is approved for UPFLOW, DOWNFLOW, and HORIZONTAL installations.

Clearance arrows do not change with furnace orientation.

1" (25.4mm) TOP PLENUM; 0" BACK; * 0" SIDE; FURNACE FRONT; SERVICE 24" (610mm); * 0" SIDE; FRONT 3" (76.2mm); 0" BOTTOM; † 0"

Clearance in inches

Vent Clearance to combustibles:
For Single Wall vents 6 inches (6 po).
For Type B-1 vent type 1 inch (1 po).

MINIMUM INCHES CLEARANCE TO COMBUSTIBLE CONSTRUCTION

DOWNFLOW POSITIONS:

† Installation on non-combustible floors only. For installation on combustible flooring only when installed on a manufacturer approved special base kit or manufacturer recommended coil assembly.

Ø 18 inches front clearance required for alcove.

* Indicates supply or return sides when furnace is in the horizontal position. Line contact only permissible between lines formed by intersections of the Top and two Sides of the furnace jacket, and building joists, studs or framing.

336996-101 REV.F

A220231

SPECIFICATIONS

UNIT SIZE			045V14--12	070V14--12	070V17--16	090V17--16	090V21--20	110V21--22	135V24--22
HEATING AND CAPACITY AND EFFICIENCY									
Input BTUh*	All Standard	High	44,000	66,000	66,000	88,000	88,000	110,000	132,000
	All Low NOx Upflow	Low	29,000	43,500	43,500	58,000	58,000	72,500	87,000
	All Low NOx	High	42,000	63,000	63,000	84,000	84,000	105,000	126,000
	Downflow/ Horizontal	Low	29,000	43,500	43,500	58,000	58,000	72,500	87,000
Output Capacity (BTUh)†	All Standard	High	35,000	53,000	53,000	71,000	71,000	89,000	107,000
	All Low NOx Upflow	Low	23,000	35,000	35,000	47,000	47,000	59,000	70,000
	All Low NOx	High	34,000	51,000	51,000	68,000	68,000	85,000	102,000
	Downflow/ Horizontal	Low	23,000	35,000	35,000	47,000	47,000	59,000	70,000
Certified Temperature Rise Range - °F (°C)		High	30 - 60 (17 - 33)	30 - 60 (17 - 33)	25 - 55 (14 - 31)	40 - 70 (22 - 39)	25 - 55 (14 - 31)	30 - 60 (17 - 33)	40 - 70 (22 - 39)
		Low	20 - 50 (11 - 28)	20 - 50 (11 - 28)	15 - 45 (8 - 25)	30 - 60 (17 - 33)	15 - 45 (8 - 25)	20 - 50 (11 - 28)	25 - 55 (14 - 31)
AFUE†			80	80	80	80	80	80	80
AIRFLOW CAPACITY AND BLOWER DATA									
Rated Certified External Static Pressure	Heating		0.1	0.12	0.12	0.15	0.15	0.2	0.2
	Cooling		0.5	0.5	0.5	0.5	0.5	0.5	0.5
Airflow CFM @ Rated ESP (CFM)‡	Heating High/Low		770/655	1090/705	1235/1120	1240/1045	1690/1530	1620/1195	1915/1765
	Cooling		185-1345	220-1340	260-1715	340-1480	330-2285	375-2345	365-2325
Cooling Capacity (tons)	400 CFM/ton		3	3	4	3.5	5	5	5
	350 CFM/ton		3.5	3.5	4.5	4	5.5	5.5	5.5
Direct Drive Motor Type			Electronically Commutated Motor (ECM)						
Direct Drive Motor HP			1/2	1/2	3/4	1/2	1	1	1
Motor Full Load Amps			6.7	6.7	9.2	6.7	11.5	11.5	11.7
Heating Blower Control (Htg Off-Delay)			Adjustable: 90, 120, 150, 180 seconds						
Cooling Blower Control (Time Delay Relay)			90 seconds						
Blower Wheel Diameter x Width - In. (mm)			10 x 6	10 x 6	11 x 8	10 x 8	11 x 11	11 x 11	11 x 11
Air Filtration System			Field Supplied Filter						
Filter used for Certified Watt Data			325531-40**						
ELECTRICAL DATA									
Unit Volts-Hertz-Phase			115-60-1						
Operating Voltage Range	Min-Max		104-127						
Maximum Unit Amps			8	8	10.5	8.6	14.3	14.6	13.8
Unit Ampacity			10.8	10.8	13.9	11.3	18.5	18.8	17.9
Maximum Wire Length									
Measure 1 way in Ft	Feet		34	34	26	32	31	30	32
(M)	Meters		10.5	10.5	8.1	10.0	9.4	9.3	9.8
Minimum Wire Size	AWG		14	14	14	14	12	12	12
Max. Fuse/Ckt Bkr Size (Time-Delay Type Recommended)	Amps		15	15	15	15	20	20	20
Transformer Capacity	(24 VAC output)		40VA						
External Control Power Available	Heating		12VA						
	Cooling		35VA						
GAS CONTROLS									
Burners			2	3	3	4	4	5	6
Gas Connection Size			1/2in. NPT						
Gas Valve (Redundant)	Mfr		WhiteRodgers™						
Min. inlet pressure	(in.w.c.)		4.5 (Natural Gas)						
Max. inlet pressure	(in.w.c.)		13.6 (Natural Gas)						
Ignition Device			Silicon Nitride						
Factory installed orifice			43	43	43	43	43	43	43
CONNECTIONS									
Communication System			InteliSense™						
Thermostat Connections			G, C, W1, W/W2, Y/Y2, Y1, R, DHUM						
Accessory Connections			EAC-1 (115 VAC); HUM (24 VAC); 1-STG AC (via Y/Y2); 2-STG AC (via Y/Y2 and Y1)						

*. Gas input ratings are certified for elevations to 2000 ft. (610 M). In USA, For elevations above 2000 ft (610 M), reduce ratings 4 percent for each 1000 ft (305 M) above sea level. Refer to National Fuel Gas Code NFPA 54/ANSI Z223.1 Table F.4 or furnace installation instructions.

†. Capacity in accordance with U.S. Government DOE test procedures.

‡. Airflow shown is for bottom only return-air supply for the as-shipped speed tap. For air delivery above 1800 CFM, see Air Delivery table for other options. A filter is required for each return-air supply. An airflow reduction of up to 7 percent may occur when using the factory-specified 4-5/16-in. (110 mm) wide, high efficiency media filter.

**. See Accessory List for part numbers available.

AIR DELIVERY—CFM (With Filter)*

Unit Size	Airflow Setting	Default Setting	External Static Pressure (in. w.c.)									
			0.1	0.2	0.3	0.4	0.5	0.6	0.7	0.8	0.9	1
045V14--12	1	Cont. Fan	455	390	325	255	185	115	-	-	-	-
	2		500	440	380	320	255	185	120	-	-	-
	3		565	510	450	395	340	285	220	145	-	-
	4		600	550	495	440	390	340	285	225	145	-
	5	Low Heating	655	605	555	505	455	410	365	310	255	190
	6		720	675	630	585	535	490	450	405	360	310
	7	High Heating	770	725	680	640	595	550	505	465	425	380
	8		795	755	715	670	630	585	540	500	460	425
	9		825	785	745	705	660	620	575	535	500	460
	10		880	840	800	765	725	685	645	605	565	530
	11		910	875	835	800	760	725	685	645	605	570
	12		935	900	865	830	795	755	720	685	645	610
	13	Low Cooling	985	950	915	885	850	815	780	745	710	675
	14		1015	980	950	920	885	850	820	785	750	715
	15		1045	1010	980	945	915	885	850	815	785	750
	16		1075	1045	1015	980	950	920	890	855	825	790
	17		1110	1080	1045	1015	985	955	925	895	860	830
	18		1160	1130	1100	1070	1040	1015	985	955	920	890
	19		1190	1160	1130	1100	1075	1045	1015	990	960	930
	20		1220	1190	1160	1135	1105	1075	1050	1020	990	960
	21		1250	1225	1195	1165	1140	1115	1085	1060	1030	1000
	22		1280	1255	1225	1200	1175	1145	1120	1095	1065	1040
	23	High Cooling	1325	1295	1270	1245	1220	1190	1165	1140	1115	1085
	24		1400	1375	1350	1325	1300	1275	1250	1225	1180	1095
	25		1485	1460	1420	1380	1345	1305	1260	1225	1180	1100
070V14-12	1	Cont. Fan	480	420	355	285	220	160	115	-	-	-
	2		525	470	410	340	280	225	170	-	-	-
	3		565	510	455	395	340	275	225	175	135	-
	4		620	570	520	465	410	360	300	250	205	160
	5		650	605	560	510	460	405	355	300	250	210
	6	Low Heating	700	655	615	565	520	470	420	375	325	275
	7		715	675	630	585	540	495	440	395	345	300
	8		760	720	680	640	595	550	505	455	410	365
	9		815	780	740	700	660	620	580	535	490	450
	10		870	830	795	760	725	685	645	605	565	525
	11		920	885	850	815	780	745	710	675	635	595
	12		980	950	915	885	850	815	780	745	710	675
	13	Low Cooling	1035	1005	975	940	910	880	850	815	780	750
	14		1070	1040	1010	980	945	915	885	855	820	790
	15	High Heating	1100	1070	1040	1010	980	950	920	890	860	830
	16		1130	1100	1070	1045	1015	985	955	925	895	865
	17		1160	1130	1105	1075	1045	1020	990	960	930	900
	18		1190	1160	1135	1105	1080	1050	1025	995	965	940
	19		1220	1190	1165	1135	1110	1080	1055	1025	1000	970
	20		1250	1225	1200	1170	1145	1115	1090	1065	1035	1010
	21		1285	1255	1230	1205	1180	1150	1125	1100	1070	1045
	22		1315	1290	1265	1235	1210	1185	1160	1135	1110	1085
	23	High Cooling	1345	1320	1295	1270	1245	1215	1190	1165	1140	1115
	24		1385	1360	1335	1310	1285	1260	1235	1215	1180	1140
	25		1470	1445	1415	1375	1340	1300	1260	1225	1180	1140

Manufacturer reserves the right to change, at any time, specifications and designs without notice and without obligations.

Unit Size	Airflow Setting	Default Setting	External Static Pressure (in. w.c.)									
			0.1	0.2	0.3	0.4	0.5	0.6	0.7	0.8	0.9	1
070V17-16	1	Cont. Fan	565	480	395	325	260	180	-	-	-	-
	2		620	545	470	395	330	265	195	140	-	-
	3		695	630	560	495	425	360	305	245	175	-
	4		765	700	640	575	515	455	395	345	285	225
	5		825	770	710	650	595	535	480	420	375	325
	6		885	830	775	720	665	610	555	505	450	405
	7		960	910	860	810	755	705	655	600	550	500
	8		1030	980	935	885	835	785	740	690	645	595
	9		1095	1050	1005	960	915	865	820	775	730	685
	10	Low Heating	1130	1080	1035	995	950	905	860	815	770	725
	11		1175	1130	1085	1045	1000	960	915	870	830	785
	12	High Heating	1245	1200	1160	1120	1080	1040	1000	955	915	875
	13		1270	1230	1190	1150	1110	1070	1030	990	950	910
	14		1315	1275	1235	1195	1155	1120	1080	1040	1000	960
	15	Low Cooling	1355	1315	1275	1240	1200	1165	1125	1090	1050	1010
	16		1395	1355	1315	1280	1240	1205	1170	1135	1095	1060
	17		1470	1430	1395	1360	1325	1285	1255	1220	1185	1150
	18		1510	1475	1440	1405	1370	1335	1300	1265	1235	1200
	19		1550	1515	1480	1445	1410	1375	1345	1310	1280	1245
	20		1590	1555	1520	1490	1455	1420	1385	1355	1325	1290
	21		1630	1595	1560	1530	1495	1460	1430	1395	1365	1335
	22		1665	1630	1600	1565	1535	1500	1470	1440	1410	1380
	23		1720	1685	1655	1620	1590	1560	1525	1495	1465	1435
	24		1775	1745	1710	1680	1650	1620	1585	1555	1525	1480
	25	High Cooling	1845	1810	1780	1750	1715	1665	1620	1570	1525	1480
090V17--16	1	Cont. Fan	660	580	480	410	340	265	210	150	-	-
	2		700	625	525	455	395	320	255	205	145	-
	3		750	685	585	520	460	395	325	270	220	165
	4		805	740	670	580	520	465	405	335	280	235
	5		855	795	730	640	580	520	465	405	345	295
	6		900	845	785	695	635	580	525	470	410	355
	7		945	890	835	770	685	630	575	530	475	415
	8		975	925	865	810	725	665	615	565	515	460
	9		1015	965	915	860	775	715	665	615	570	520
	10	Low Heating	1070	1020	970	920	865	785	730	680	630	590
	11		1130	1085	1040	990	945	865	805	755	710	665
	12		1170	1125	1080	1030	985	930	855	805	760	710
	13	Low Cooling	1200	1155	1115	1070	1020	975	900	845	800	755
	14	High Heating	1240	1200	1160	1115	1070	1025	980	905	855	810
	15		1260	1220	1180	1140	1095	1050	1005	935	880	840
	16		1295	1255	1215	1175	1130	1090	1045	980	925	880
	17		1325	1285	1250	1210	1170	1125	1085	1035	965	920
	18		1360	1325	1285	1245	1210	1165	1125	1085	1015	960
	19		1395	1360	1320	1285	1245	1205	1165	1125	1075	1010
	20		1430	1390	1355	1320	1285	1245	1205	1165	1125	1060
	21		1460	1425	1390	1355	1320	1280	1245	1205	1165	1115
	22		1500	1465	1430	1395	1360	1320	1285	1245	1210	1170
	23		1535	1500	1465	1430	1400	1360	1325	1290	1255	1215
	24		1575	1540	1505	1475	1440	1405	1370	1335	1285	1225
	25	High Cooling	1615	1580	1545	1515	1480	1450	1410	1350	1285	1225

Manufacturer reserves the right to change, at any time, specifications and designs without notice and without obligations.

Unit Size	Airflow Setting	Default Setting	External Static Pressure (in. w.c.)									
			0.1	0.2	0.3	0.4	0.5	0.6	0.7	0.8	0.9	1
090V21--20	1	Cont. Fan	780	660	545	440	330	210	-	-	-	-
	2		860	740	645	535	440	340	220	-	-	-
	3		930	820	725	625	530	440	350	230	-	-
	4		1030	930	835	755	655	570	485	400	310	185
	5		1125	1035	935	860	785	690	610	530	450	370
	6		1210	1125	1035	955	880	805	725	645	570	495
	7		1285	1210	1125	1040	975	905	830	750	675	610
	8		1385	1310	1235	1150	1085	1020	955	885	815	745
	9		1475	1410	1340	1265	1190	1130	1065	1010	940	875
	10	Low Heating	1565	1500	1435	1365	1290	1230	1175	1115	1060	995
	11		1670	1605	1550	1485	1415	1350	1295	1240	1180	1130
	12	High Heating/Low Cooling	1720	1660	1605	1540	1475	1410	1350	1300	1245	1195
	13		1765	1710	1655	1595	1530	1465	1405	1355	1305	1255
	14		1815	1760	1705	1650	1585	1525	1460	1410	1360	1310
	15		1860	1805	1755	1700	1640	1580	1515	1465	1415	1370
	16		1915	1865	1815	1760	1705	1645	1585	1530	1480	1435
	17		1970	1915	1865	1815	1760	1705	1645	1590	1540	1495
	18		2020	1965	1920	1870	1820	1765	1710	1650	1605	1560
	19		2070	2025	1975	1930	1880	1830	1775	1720	1670	1625
	20		2120	2075	2030	1985	1935	1885	1835	1785	1730	1685
	21		2170	2125	2080	2035	1990	1945	1895	1845	1795	1750
	22		2220	2175	2130	2090	2045	2000	1955	1910	1860	1815
	23	High Cooling	2270	2225	2185	2145	2100	2055	2015	1970	1920	1875
	24		2355	2315	2275	2240	2200	2160	2115	2075	2020	1965
	25		2470	2425	2385	2335	2285	2230	2175	2115	2050	1985
110V21--22	1	Cont. Fan	815	690	580	475	375	285	190	-	-	-
	2		890	780	670	570	475	385	300	215	135	-
	3		1000	900	800	700	615	525	440	360	285	210
	4		1100	1005	910	820	735	650	570	490	415	350
	5		1190	1105	1015	930	840	765	685	610	535	465
	6		1280	1195	1110	1025	945	865	795	725	645	575
	7		1385	1305	1225	1150	1070	995	920	860	790	720
	8		1480	1405	1335	1260	1190	1120	1045	975	920	850
	9		1575	1505	1435	1365	1295	1230	1165	1095	1030	975
	10	Low Heating	1685	1620	1555	1485	1420	1360	1295	1230	1165	1105
	11	Low Cooling	1785	1725	1660	1600	1535	1475	1415	1355	1300	1235
	12		1880	1825	1765	1705	1645	1590	1530	1470	1415	1365
	13	High Heating	1935	1880	1825	1765	1710	1650	1595	1545	1490	1435
	14		1995	1940	1885	1825	1770	1715	1660	1605	1555	1505
	15		2010	1960	1905	1850	1790	1740	1685	1630	1580	1530
	16		2060	2005	1950	1900	1840	1790	1735	1685	1635	1585
	17		2095	2045	1990	1940	1885	1835	1780	1730	1680	1635
	18		2140	2090	2040	1990	1935	1885	1835	1790	1740	1695
	19		2190	2145	2095	2045	1995	1940	1895	1850	1805	1755
	20		2250	2205	2155	2105	2055	2010	1960	1915	1870	1830
	21	High Cooling	2305	2260	2215	2165	2120	2075	2030	1985	1940	1900
	22		2355	2305	2260	2220	2175	2130	2085	2040	2000	1960
	23		2400	2355	2315	2270	2230	2185	2145	2100	2060	2015
	24		2460	2420	2375	2335	2290	2250	2205	2150	2100	2045
	25		2515	2470	2430	2385	2345	2290	2230	2170	2110	2050

Manufacturer reserves the right to change, at any time, specifications and designs without notice and without obligations.

Unit Size	Airflow Setting	Default Setting	External Static Pressure (in. w.c.)									
			0.1	0.2	0.3	0.4	0.5	0.6	0.7	0.8	0.9	1
135V24--22	1	Cont. Fan	810	695	595	475	365	260	130	-	-	-
	2		915	805	710	610	505	405	305	195	-	-
	3		980	880	785	700	590	490	400	310	200	-
	4		1075	980	885	805	725	620	530	445	360	270
	5		1160	1070	980	900	830	745	650	565	480	405
	6		1240	1160	1070	990	920	845	765	680	595	520
	7		1295	1215	1135	1050	980	915	845	755	670	595
	8		1345	1265	1190	1105	1035	970	900	825	745	665
	9		1435	1365	1290	1215	1145	1080	1020	950	880	800
	10		1460	1390	1315	1240	1170	1105	1045	980	910	835
	11		1545	1480	1410	1340	1270	1205	1140	1085	1020	960
	12		1630	1565	1495	1430	1365	1300	1240	1180	1125	1065
	13	Low Cooling	1730	1670	1605	1545	1480	1415	1355	1295	1240	1185
	14	Low Heating	1820	1765	1705	1645	1585	1525	1465	1410	1350	1300
	15		1855	1800	1740	1680	1625	1565	1505	1450	1395	1340
	16		1925	1870	1815	1755	1700	1645	1590	1530	1475	1420
	17	High Heating	1965	1915	1860	1800	1750	1700	1640	1585	1530	1480
	18		2015	1965	1910	1855	1800	1750	1700	1640	1585	1540
	19		2095	2045	1990	1940	1890	1840	1790	1735	1680	1630
	20		2145	2095	2045	1995	1945	1895	1845	1795	1735	1685
	21		2220	2170	2120	2075	2025	1975	1930	1880	1825	1770
	22	High Cooling	2300	2255	2205	2165	2115	2070	2020	1975	1925	1875
	23		2375	2325	2280	2235	2190	2145	2100	2050	2005	1955
	24		2450	2405	2360	2320	2270	2225	2185	2135	2060	1985
	25		2505	2460	2415	2370	2325	2270	2205	2135	2060	1985

Airflow Settings

	Default Airflow Settings*				Designated Airflow Settings		
Unit Size	High Heating	Low Heating	High Cooling	Low Cooling	High Heating	Low Heating	Constant Fan
045V14--12	7	5	23	13	(3 - 11)	(3 - 8)	(1 - 9)
070V14-12	15	6	23	13	(10 - 19)	(3 - 10)	(1 - 9)
070V17-16	12	10	25	15	(7 - 16)	(4 - 12)	(1 - 5)
090V17-16	14	8	25	13	(8 - 21)	(3 - 11)	(1 - 10)
090V21-20	12	10	23	12	(7 - 17)	(3 - 12)	(1 - 9)
110V21-22	13	10	21	11	(9 - 19)	(5 - 12)	(1 - 8)
135V24-22	17	14	22	13	(11 - 22)	(7 - 15)	(1 - 9)

*. Setting #1 is the default setting for Constant Fan

TYPICAL WIRING SCHEMATIC

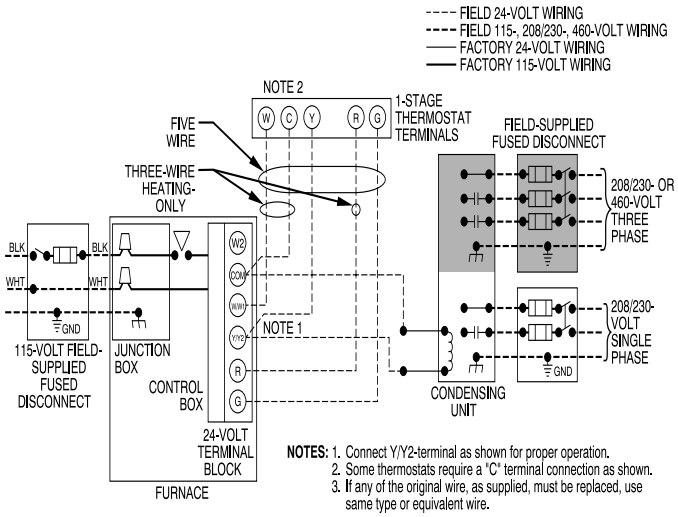

A95236

FURNACE CONTROL BOARD

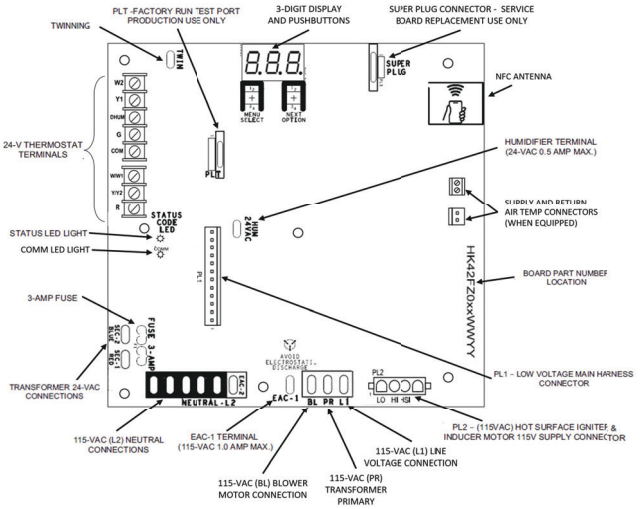

A221519

VENTING CONFIGURATIONS

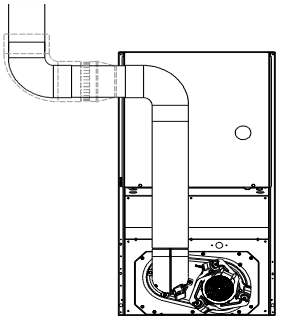

SEE NOTES:1,2,3,4,5,7,8,9 on the page following these figures

A03210

Downflow Application-Vent Elbow Up then Left

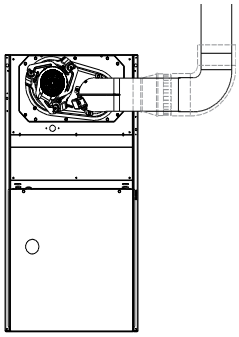

SEE NOTES: 1,2,3,4,7,8,9 on the pages following these figures

A03209

Upflow Application-Vent Elbow Right

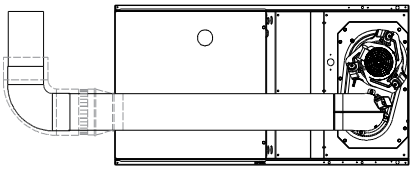

SEE NOTES: 1,2,4,5,7,8,9

A02068

Horizontal Right Application-Vent Elbow Left

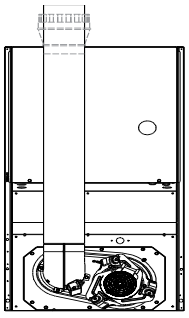

SEE NOTES: 1,2,4,5,7,8,9 on the page following these figures

A03211

Downflow Application-Vent Elbow Up

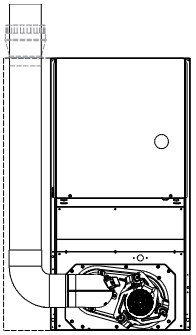

SEE NOTES: 1,2,4,5,6,7,8,9 on the page following these figures

A03207

Downflow Application-Vent Elbow Left then Up

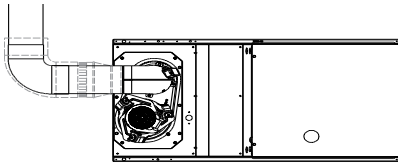

SEE NOTES: 1,2,4,7,8,9 on the page following these figures

A03213

Horizontal Left Application-Vent Elbow Left

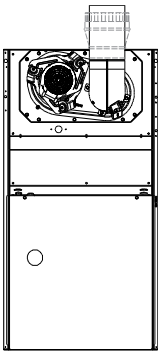

SEE NOTES: 1,2,4,7,8,9 on the page following these figures

A03208

Upflow Application-Vent Elbow Up

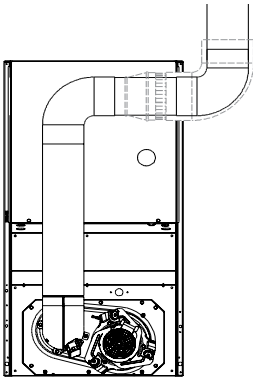

SEE NOTES:1,2,3,4,5,7,8,9 on the page following these figures.

A03212

Downflow Application-Vent Elbow Up then Right

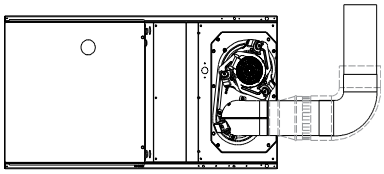

SEE NOTES: 1,2,4,7,8,9 on the page following these figures

A03218

Horizontal Right Application-Vent Elbow Right

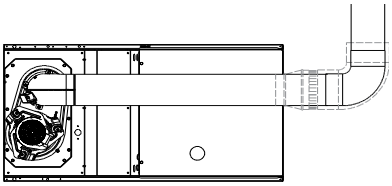

SEE NOTES: 1,2,4,5,7,8,9 on the page following these figures

A03216

Horizontal Left Application-Vent Elbow Right

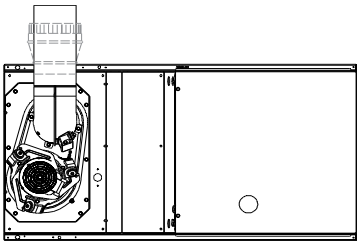

SEE NOTES: 1,2,4,5,7,8,9 on the page following these figures

A03215

Horizontal Left Application-Vent Elbow Up

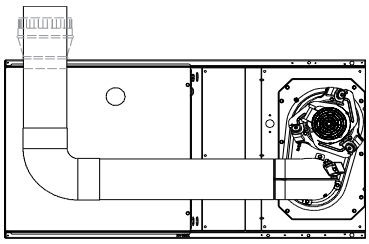

SEE NOTES: 1,2,4,5,7,8,9 on the page following these figures

A03219

Horizontal Right Application-Vent Elbow Left then Up

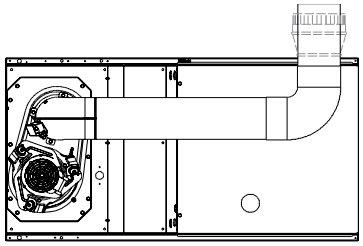

SEE NOTES: 1,2,4,5,7,8,9 on the page following these figures

A03214

Horizontal Left Application-Vent Elbow Right then Up

Venting notes

1. For common vent, vent connector sizing and vent material: United States, latest edition of the National Fuel Gas Code (NFGC), ANSI Z223.1/NFPA 54.
2. Immediately increase to 5-in. (127 mm) vent connector outside furnace casing when 5-in. (127 mm) vent connector required, refer to Note 1.
3. Side outlet vent for upflow and downflow installations must use Type B vent immediately after exiting the furnace, except when Downflow Vent Guard is used in downflow position.
4. Type B vent where required, refer to Note 1.
5. 4-in. (102 mm) single wall vent must be used inside furnace casing and the Downflow Vent Guard Kit.
6. Accessory Downflow Vent Guard Kit, required in downflow installations with bottom vent configuration.
7. Chimney Adapter Kit required for exterior masonry chimney applications. Refer to Chimney Adapter Kits for sizing and complete application details.
8. Secure vent connector to furnace elbow with (2) corrosion-resistant sheet metal screws, space approximately 180° apart.
9. Secure all other single wall vent connector joints with (3) corrosion-resistant screws spaced approximately 120° apart. Secure Type B vent connectors per vent connector manufacturer's recommendations.

ACCESSORIES

PART NO.	DESCRIPTION	045V14-12	070V14-12	070V17-16	090V17-16	090V21-20	110V21-22	135V24-22
ACG1425NCB*	External Filter Rack, 14-1/2 x 25”	X	X	-	-	-	-	-
ACG1625NCF*	External Filter Rack, 16 x 25”	-	-	X	X	-	-	-
ACG2025NCJ*	External Filter Rack, 20 x 25”*	-	-	-	-	X	X	-
ACG2424NCL*	External Filter Rack, 24-1/2 x 24”*	-	-	-	-	-	-	X
325531-402*	Washable filter, 3/4” x 16” x 25”*	X	X	X	X	-	-	-
325531-403*	Washable filter, 3/4” x 21” x 25”*	-	-	-	-	X	X	-
325531-404*	Washable filter, 3/4” x 24” x 25”*	-	-	-	-	-	-	X
KGACA02014FC	Chimney Adapter Kit, up to or equal to 110K BTUh	X	X	X	X	X	X	X
KGACA02015FC	Chimney Adapter Kit, greater than or equal to 135K BTUh	-	-	-	-	-	X	X
KGAFE0112UPH	Flue Extension	X	X	X	X	X	X	X
KGAVE0101DNH	Vent Extension Kit	X	X	X	X	X	X	X
KGASB0201ALL	Combustible Floor Base (Not required when evaporator coil case is used for downflow)	X	X	X	X	X	X	X
KGBVG0101DFG	Downflow Vent Guard (Not required when vent is routed through cabinet)	X	X	X	X	X	X	X
AGAGC8NPS01C*	Natural-to-Propane Conversion Kit†	X	X	X	X	X	X	X
AGAGC8PNS01C*	Propane-to-Natural Conversion Kit†	X	X	X	X	X	X	X
AGATWNPUA01A	Twinning Kit	-	-	X	X	X	X	X
KGAHA5801PSW	High Altitude Pressure Switch Kit	X	X	X	X	X	X	X

*. Purchased through Replacement Components
†. Factory-authorized and field installed. Fuel conversion kits are CSA (formerly AGA/CGA) recognized.
X = Accessory

ORIFICES		
Gas Orifice Kit - #42 (Nat Gas)	LH32DB207	See Installation Instructions for model, altitude, and heat value usages.
Gas Orifice Kit - #43 (Nat Gas)	LH32DB202	
Gas Orifice Kit - #44 (Nat Gas)	LH32DB200	
Gas Orifice Kit - #45 (Nat Gas)	LH32DB205	
Gas Orifice Kit - #46 (Nat Gas)	LH32DB208	
Gas Orifice Kit - #47 (Nat Gas)	LH32DB078	
Gas Orifice Kit - #48 (Nat Gas)	LH32DB076	
Gas Orifice Kit - #54 (LP)	LH32DB203	
Gas Orifice Kit - #55 (LP)	LH32DB201	
Gas Orifice Kit - #56 (LP)	LH32DB206	
Gas Orifice Kit - 1.25mm (LP)	LH32DB209	
Gas Orifice Kit - 1.30mm (LP)	LH32DB210	

DESCRIPTION	ACCESSORY
HUMIDIFIER	Model HUM
HEAT RECOVERY VENTILATOR	Model HRV
ENERGY RECOVERY VENTILATOR	Model ERV
UV LIGHTS	Model UVL

- Carrier has a wide variety of thermostats for your system, please visit www.Carrier.com to see all thermostat and IAQ products.

DESCRIPTION	ACCESSORY	14”	17”	21”	24”
Carrier Carbon Monoxide Alarm (10 pack)	COALMCCNRB02-A10	X	X	X	X
Carrier Infinity Air Purifier - 16x25 (407x635 mm)	DGAPAXX1625	X	X	-	-
Carrier Infinity Air Purifier - 20x25 (508x635 mm)	DGAPAXX2025	-	-	X	X
Carrier Infinity Air Purifier Repl. Filter- 16x25 (407x635 mm)	GAPCCCAR1625-A05	X	X	-	-
Carrier Infinity Air Purifier Repl. Filter- 20x25 (508x635 mm)	GAPCCCAR2025-A05	-	-	X	X
Cartridge Media Filter - 16” (407 mm) (MERV 11)	FILXXCAR0116	X	X	-	-
Cartridge Media Filter - 16” (407 mm) (MERV 8)	FILXXCAR0016	X	X	-	-
Cartridge Media Filter - 20” (508 mm) (MERV 8)	FILXXCAR0020	-	-	X	-
Cartridge Media Filter - 20” (508 mm) (MERV11)	FILXXCAR0120	-	-	X	-
Cartridge Media Filter - 24” (610 mm) (MERV 8)	FILXXCAR0024	-	-	-	X
Cartridge Media Filter - 24” (610 mm) (MERV11)	FILXXCAR0124	-	-	-	X
EZ Flex Cabinet Side or Bottom - 16”	EZXCABCR0016	X	X	-	-
EZ Flex Cabinet Side or Bottom - 20”	EZXCABCR0020	-	-	X	X
EZ Flex Replacement Filters 16” MERV 10	EXPXXFIL0016	X	X	-	-
EZ Flex Replacement Filters 16” MERV 13	EXPXXFIL0316	X	X	-	-
EZ Flex Replacement Filters 20” MERV 10	EXPXXFIL0020	-	-	X	-
EZ Flex Replacement Filters 20” MERV 13	EXPXXFIL0320	-	-	X	-
EZ Flex Replacement Filters 24” MERV 10	EXPXXFIL0024	-	-	-	X
EZ Flex Replacement Filters 24” MERV 13	EXPXXFIL0324	-	-	-	X
EZ-Flex Filter with End Caps - 16” (407 mm) (MERV 10)	EXPXXUNV0016	X	X	-	-
EZ-Flex Filter with End Caps - 16” (407 mm) (MERV 13)	EXPXXUNV0316	X	X	-	-
EZ-Flex Filter with End Caps - 20” (508 mm) (MERV 10)	EXPXXUNV0020	-	-	X	-
EZ-Flex Filter with End Caps - 20” (508 mm) (MERV 13)	EXPXXUNV0320	-	-	X	-
EZ-Flex Filter with End Caps - 24” (610 mm) (MERV 10)	EXPXXUNV0024	-	-	-	X
EZ-Flex Filter with End Caps - 24” (610 mm) (MERV 13)	EXPXXUNV0324	-	-	-	X
Media Filter Cabinet - 20”	FILCABXL0020	-	-	X	-
Media Filter Cabinet - 24”	FILCABXL0024	-	-	-	X
Media Filter Cabinet -16”	FILCABXL0016	X	X	-	-

© 2025 Carrier. All rights reserved.

Manufacturer reserves the right to change, at any time, specifications and designs without notice and without obligations.