59SU5A
Comfort™ Single−Stage Upflow/Horizontal, Ultra Low NOx Emissions Condensing Gas Furnace

Carrier
turn to the experts

Product Data

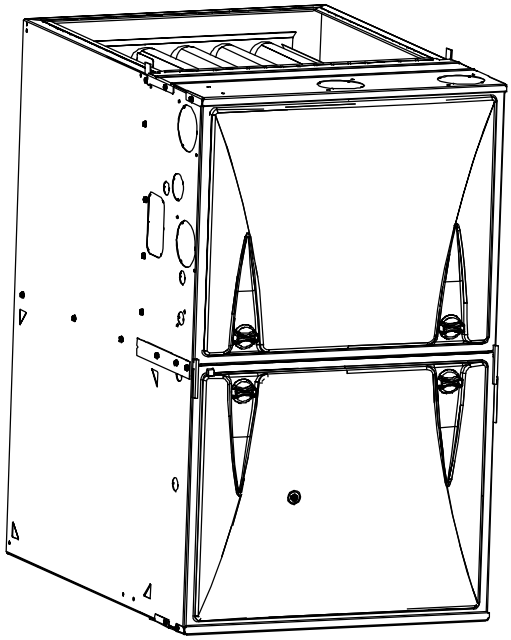

A190285

The 59SU5A Comfort™ 95 Ultra-Low NOx gas furnace delivers consumer comfort in a unit that meets California's South Coast Air Quality Management District (SCAQMD) and San Joaquin Valley Air pollution Control District (SJVAPCD) NOx emissions limit of 14ng/J. Offering the performance and benefits of our Comfort Series gas furnaces, this furnace releases 65% less nitrogen oxides (NOx) than previous models. NOx contributes to the formation of smog and acid rain and the deterioration of water quality. Lower NOx emissions mean lower production of particulate matter and cleaner air for the environment. Energy efficiency is at the heart of this furnace with up to 95.0% AFUE gas efficiency and the electrically-efficient fixed-speeds, constant torque (FCT) ECM blower motor. This gas furnace also features Upflow/Horizontal installation flexibility, and is available in four model sizes. All sizes can be vented for direct vent/two-pipe, ventilated combustion air, or single-pipe applications.

PERFORMANCE

- Ultra Low NOx - meets the nitrogen oxides (NOx) emission limit of 14 nanograms/joule for the South Coast Air Quality Management Districts and San Joaquin Valley Air Pollution Control District in California
- Fixed-speeds, constant torque (FCT) ECM blower motor for electrically efficient operation all year long in heating, cooling and continuous fan operation
- Single-stage gas valve with pre-mix burner
- Pilot free, hot surface ignition
- Variable-speed inducer motor for consistent operation
- High temperature limit control designed to prevent overheating
- Adjustable blower speed for heating and cooling
- Stainless-steel primary heat exchanger
- Stainless-steel condensing secondary heat exchanger
- Cabinet air leakage less than 2.0% at 1.0 in. W.C. and cabinet air leakage less than 1.4% at 0.5 in. W.C. when tested in accordance with ASHRAE Standard 193

INSTALLATION FLEXIBILITY

- Upflow/Horizontal design for upflow, horizontal right or horizontal left installation, with rotating vent elbow for exhaust venting flexibility
- Factory-configured ready for upflow applications.
- Ideal height 35" (889 mm) cabinet: short enough for taller coils, but still allows enough room for service.
- Two-pipe venting, single-pipe venting or ventilated combustion air.

APPLICATIONS

- Factory-configured for Natural Gas; not convertible to Liquid Propane.
- Not approved for downflow installation
- Approved for installations up to 5,400 ft.

Comfort SERIES

ENERGY STAR

Certified System ISO 9001 Quality

DESIGN CERTIFIED

AHRI CERTIFIED www.ahridirectory.org

Use of the AHRI Certified ™ Mark indicates a manufacturer's participation in the program. For verification of certification for individual products, go to www.ahridirectory.org.

EASE OF INSTALLATION FACTORY AUTHORIZED PARTS ENGINEERED QUALITY

FURNACE	CASING DIMENSIONS (IN.)			RATED HEATING OUTPUT† BTUH	AFUE	ENERGY STAR®	HEATING AIRFLOW		COOLING CFM @ 0.5 ESP (in. W.C.)	MOTOR HP - SPEED TAPS
	H	D	W		UPFLOW/ HORIZONTAL		HEATING CFM‡	HEATING ESP (in. W.C.)		
59SU5A060E17--16	35	29.50	17.50	58,000	95%	YES	1205	0.12	1515	3/4 - 5
59SU5A080E21--20	35	29.50	21.00	78,000	95%	YES	1790	0.12	2025	1 - 5
59SU5A100E21--20	35	29.50	21.00	96,000	95%	YES	1880	0.15	2065	1 - 5
59SU5A100E21--22	35	29.50	21.00	97,000	95%	YES	1885	0.15	2025	1 - 5

† Capacity in accordance with DOE test procedures. Ratings are position dependent. See rating plate.
‡ Heating CFM at factory default blower motor heating tap settings.
ESP – External Static Pressure

MODEL NUMBER NOMENCLATURE

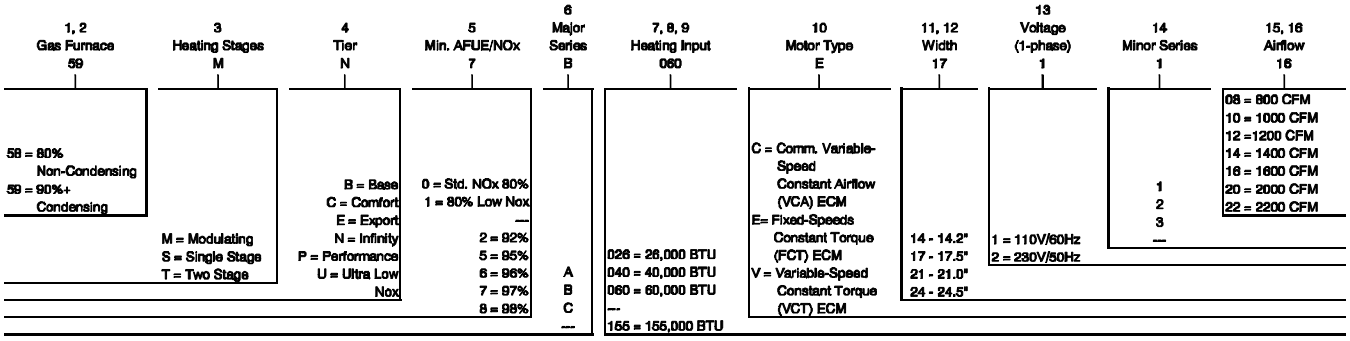

A190403

FURNACE COMPONENTS

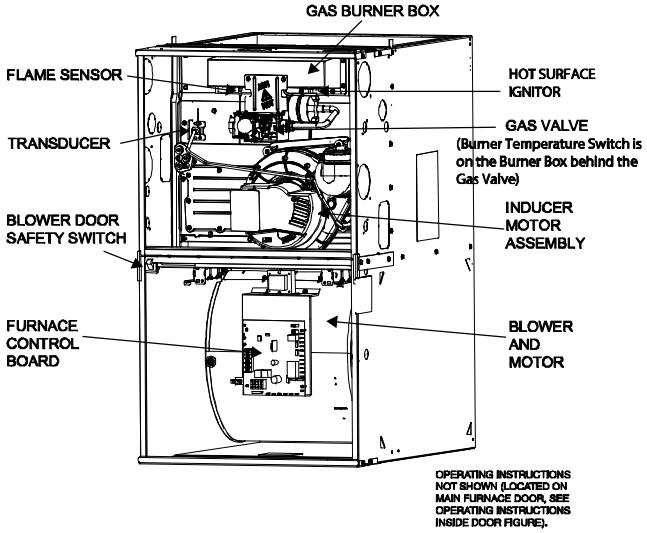

A190258

FEATURES AND BENEFITS

HYBRID HEAT® Dual Fuel System — This system can provide more control over your monthly energy bills by automatically selecting the most economical method of heating. With HYBRID HEAT components, our system automatically switches between the gas furnace and the electric heat pump as outside temperatures change to maintain greater efficiency and comfort than with any traditional single-source heating system. The heat pump also delivers high-efficiency cooling in the summer.

Pilot Free Igniter — Carrier's unique igniter is not only physically robust but it is also electrically robust. It is capable of running at line voltage and does not require complex voltage regulators.

Multi-Speed ECM Blower Motor — This Fixed-Speeds, Constant Torque ECM, or electronically commutated motor, can provide an efficiency enhancement for select Carrier air conditioner or heat pump systems. It uses less electrical power than its PSC counterpart and also has a wider range of speeds.

Media Filter Cabinet — Enhanced indoor air quality in the home is made easier with our media filter cabinet-accessory (purchased separately). When installed as a part of the system, this cabinet allows for easy and convenient addition of a Carrier high efficiency air filter.

Upflow/Horizontal Design — One model for three applications – upflow, horizontal right or horizontal left.

Direct or Single-pipe Venting, or Optional Ventilated Combustion Air — All sizes can be vented for direct vent/two-pipe, ventilated combustion air, or single-pipe applications.

Sealed Combustion System — This furnace brings in combustion air from outside the furnace, which results in especially quiet operation. The enclosed pre-mix burner also contributes to lower operating noise.

Insulated Casing — Foil-faced insulation in the heat exchanger section of the casing minimizes heat loss, while insulation in the blower compartment reduces operating noise.

Bottom Closure — Factory-installed for side return; easily removable for bottom return. The multi-use bottom closure can also serve for roll-out protection in horizontal applications, and act as the bottom closure for the optional return air base accessory.

Blower Access Panel Switch — Automatically shuts off 115-v power to furnace whenever blower access panel is opened.

Quality Registration — Our furnaces are engineered and manufactured under a quality management system registered to ISO 9001.

SPECIFICATIONS

The furnace should be sized to provide 100 percent of the design heating load requirement plus any margin that occurs because of furnace model size capacity increments. None of the furnace model sizes can be used if the heating load is less than half of the furnaces model's output capacity. Use Air Conditioning Contractors of America (Manual J and S); American Society of Heating, Refrigerating, and Air-Conditioning Engineers; or other approved engineering method to calculate heating load estimates and select the furnace. Excessive oversizing of the furnace may cause the furnace and/or vent to fail prematurely, customer discomfort and/or vent freezing.

Failure to follow these guidelines is considered faulty installation and/or misapplication of the furnace; and resulting failure, damage, or repairs may impact warranty coverage.

Heating Capacity and Efficiency		**060E17--16**	**080E21--20**	**100E21--20**	**100E21--22**
Input	Heating (BTUH)	60,000	80,000	100,000	100,000
Output	Heating (BTUH)	58,000	78,000	96,000	97,000
Certified Temperature Rise Range °F (°C)	Heating	30 – 60 (17 – 33)	30 – 60 (17 – 33)	35 – 65 (19 – 36)	35 – 65 (19 – 36)
Airflow Capacity and Blower Data					
Rated External Static Pressure (in. w.c.)	Heating	0.12	0.12	0.15	0.15
	Cooling	0.5	0.5	0.5	0.5
Airflow Delivery @ Rated ESP (CFM)	Heating	1205	1790	1880	1885
	Cooling	1515	2025	2065	2025
Cooling Capacity (tons) @ CFM/ton	400 CFM/ton	3.5	5	5	5
	350 CFM/ton	4	5.5	5.5	5.5
Direct–Drive Motor Type		Electronically Commutated Motor (ECM)			
Direct–Drive Motor HP		3/4	1	1	1
Motor Full Load Amps		8.8	11.5	11.7	11.0
RPM Range		570 – 1400	570 – 1400	400 – 1300	400 – 1300
Speed Selections		5	5	5	5
Blower Wheel Dia x Width	in.	11 x 8	11 x 10	11 x 10	11 x 10
Filter Used for Certified Watt Data		KGAWF**06UFR			
Electrical Data					
Input Voltage	Volts–Hertz–Phase	115–60–1			
Operating Voltage Range	Min–Max	104–127			
Maximum Input Amps	Amps	10.9	13.6	13.8	13.8
Unit Ampacity	Amps	14.2	17.6	17.8	17.7
Minimum Wire Size	AWG	14	12	12	12
Maximum Wire Length@ Minimum Wire Size	Feet	26.2	32.8	32.3	32.8
Maximum Fuse/Ckt Bkr (Time–Delay Type Recommended)	Amps	15	20	20	20
Transformer Capacity (24 VAC output)		40 VA			
External Control Power Available	Heating	21.8 VA			
	Cooling	34 VA			
Controls					
Gas Connection Size		1/2" - NPT			
Gas Valve (Redundant)	Manufacturer	White Rodgers			
Minimum Inlet Gas pressure (in. wc)		4.50			
Maximum Inlet Gas pressure (in. wc)		13.60			
Manufactured (Mobile) Home Kit		Not approved for Manufactured Home use			
Ignition Device		Silicon Nitride			
Heating Blower Control (Heating Off-Delay)		Adjustable: 90, 120, 150, 180 seconds			
Cooling Blower Control (Time Delay Relay)		90 seconds			
Communication System		*none*			
Thermostat Connections		Com 24V, R, W, G, Y			
Accessory Connections		EAC (115vac); HUM (115vac); 1-stg AC (via Y)			

INSTALLATION CONSIDERATIONS

Refer to Installation Instructions for complete installation requirements.

Evaporator Coil Spacer or Shield Requirements

Type of Coil	Install Flush to Furnace	Install with 8−in. Spacer	Install with Metal Shield
Furnace Manufacturer's N Coil	Allowed	Not Required	Not Required
Furnace Manufacturer's A Coil	Not Allowed	Allowed (Except 100k BTU size in Horizontal Right − **MUST** use shield)	Allowed (See Note 2)
3rd Party Coil − Factory Shielded (See Note 1)	Allowed	Not Required	Not Required
3rd Party Coil − Unshielded	Not Allowed	Allowed (Except 100k BTU size in Horizontal Right − **MUST** use shield)	Allowed (See Note 3)

NOTE:

1. 3rd Party Coils that are factory-supplied with a metallic shield over the plastic composite drain pan must completely shield all plastic composite materials from direct exposure to any part of the heat exchanger. Consult with 3rd Party Manufacturer to ensure coil is properly shielded. Coils that are only partially shielded should be treated as un-shielded and require a spacer.
2. Field-fabricated metallic shield must completely shield all plastic composite materials from direct exposure to any part of the heat exchanger. Coils that are only partially shielded should be treated as un-shielded and require a spacer.
3. For 3rd party unshielded coils, consult manufacturer for design of a field-fabricated shield that completely shields all plastic composite materials from direct exposure to any part of the heat exchanger.

CONDENSATE TRAP CLEARANCES

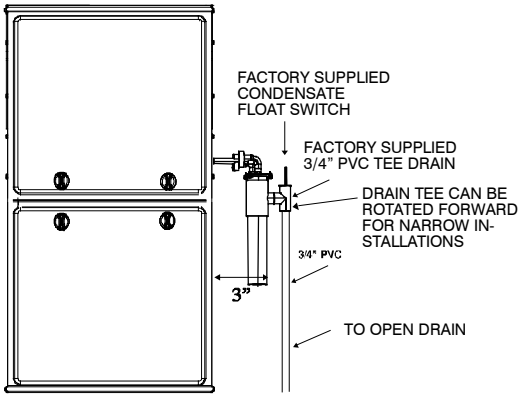

Representative drawing only, some models may vary.

A190317

Trap Clearance in Upflow Application

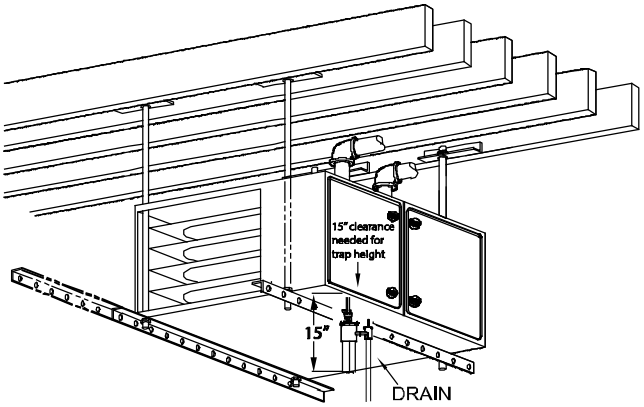

Representative drawing only, some models may vary.

A190356

15" Trap Clearance in Horizontal Application

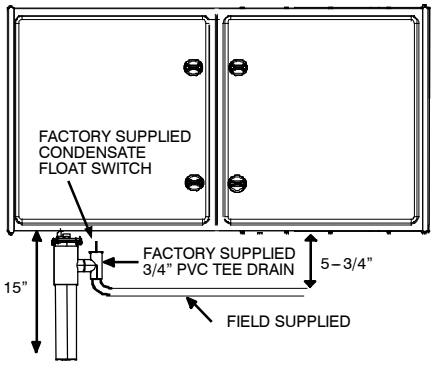

Representative drawing only, some models may vary.

A190315

15" Trap Clearance in Horizontal Application (Note: Drain line can be run horizontally or vertically)

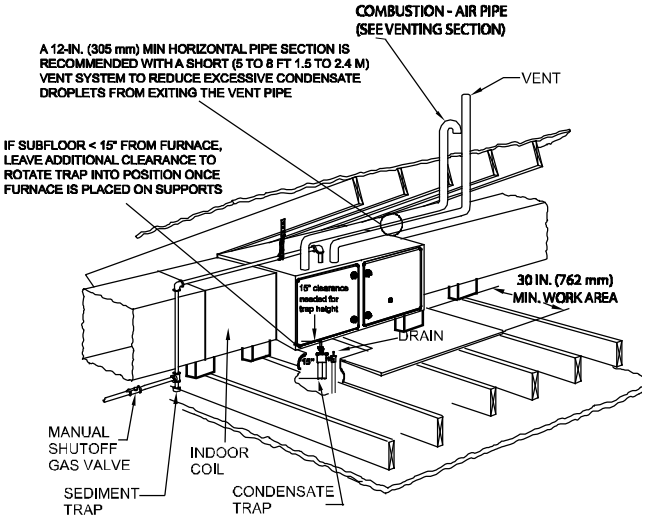

Representative drawing only, some models may vary.

A190318

Working Platform for Attic Installation

ACCESSORIES

DESCRIPTION	PART NUMBER	060E17--16	080E21--20	100E21--20	100E21--22
Vent Kit - Through the Cabinet for HZ left/right ONLY	KGADC0101BVC	X	X	X	X
Vent Terminal - Concentric - 2” (51 mm)	KGAVT0701CVT	See Venting Tables			
Vent Terminal - Concentric - 3” (76 mm)	KGAVT0801CVT				
Vent Terminal Bracket - 2” (51 mm)	KGAVT0101BRA				
Vent Terminal Bracket - 3” (76 mm)	KGAVT0201BRA				
Vent Kit – Rubber Coupling	KGAAC0101RVC				
Freeze Protect Kit - Condensate Drain Line Tape	KGAHT0101CFP	X	X	X	X
CPVC to PVC Drain Adapters - 1/2” CPVC to 3/4” PVC	KGAAD0110PVC	X	X	X	X
Condensate Neutralizer Kit	P908–0001	X	X	X	X
Return Air Base (Upflow Applications) 17.5–in. wide	KGARP0301B17	X			
Return Air Base (Upflow Applications) 21.0–in. wide	KGARP0301B21		X	X	X
IAQ Device Duct Adapters 20.0–in. IAQ to 16 in. Side Return	KGAAD0101MEC	20”x25” IAQ Devices			
IAQ Device Duct Adapters 24.0–in. IAQ to 16 in. Side Return	KGAAD0201MEC	24”x25” IAQ Devices			
Gas Valve Tower Port Adapter Kit	92–1003	X	X	X	X
Bottom Filter Rack – 17.5 inches (455 mm)	KGBFR0501B17	X			
Bottom Filter Rack – 21 inches (533 mm)	KGBFR0601B21		X	X	X
Filter Pack (6 pack) – Washable - 24x25x1 (610x635x25 mm)	KGAWF1506UFR	X	X	X	X
Coil Adapter Kits (see Installation Instructions for coil requirements)					
Coil Adapter Kits – No Offset	KGADA0101ALL	X	X	X	X
Coil Adapter Kits – Single Offset	KGADA0201ALL	X	X	X	X
Coil Adapter Kits – Double Offset	KGADA0301ALL	X	X	X	X

DESCRIPTION	ACCESSORY
HUMIDIFIER	Model HUM
HEAT RECOVERY VENTILATOR	Model HRV
ENERGY RECOVERY VENTILATOR	Model ERV
ELECTRONIC AIR CLEANER	Model EACB
UV LIGHTS	Model UVL

Carrier has a wide variety of thermostats for your system, please visit **www.Carrier.com** to see all thermostat and IAQ products.

DESCRIPTION	ACCESSORY	17”	21”
Carrier Carbon Monoxide Alarm (10 pack)	COALMCCNRB02–A10	X	X
Carrier Infinity Air Purifier - 16x25 (407x635 mm)	DGAPAXX1625	X	
Carrier Infinity Air Purifier - 20x25 (508x635 mm)	DGAPAXX2025		X
Carrier Infinity Air Purifier Repl. Filter- 16x25 (407x635 mm)	PGAPXCAR1625A02	X	
Carrier Infinity Air Purifier Repl. Filter- 20x25 (508x635 mm)	PGAPXCAR2025A02		X
Cartridge Media Filter - 16” (407 mm) (MERV 11)	FILXXCAR0116	X	
Cartridge Media Filter - 16” (407 mm) (MERV 8)	FILXXCAR0016	X	
Cartridge Media Filter - 20” (508 mm) (MERV 8)	FILXXCAR0020		X
Cartridge Media Filter - 20” (508 mm) (MERV11)	FILXXCAR0120		X
EZ Flex Cabinet Side or Bottom – 16”	EZXCAB––0016	X	
EZ Flex Cabinet Side or Bottom – 20”	EZXCAB––0020		X
EZ Flex Replacement Filters 16” MERV 10	EXPXXFIL0016	X	
EZ Flex Replacement Filters 16” MERV 13	EXPXXFIL0316	X	
EZ Flex Replacement Filters 20” MERV 10	EXPXXFIL0020		X
EZ Flex Replacement Filters 20” MERV 13	EXPXXFIL0320		X
EZ-Flex Filter with End Caps - 16” (407 mm) (MERV 10)	EXPXXUNV0016	X	
EZ-Flex Filter with End Caps - 16” (407 mm) (MERV 13)	EXPXXUNV0316	X	
EZ-Flex Filter with End Caps - 20” (508 mm) (MERV 10)	EXPXXUNV0020		X
EZ-Flex Filter with End Caps - 20” (508 mm) (MERV 13)	EXPXXUNV0320		X
Media Filter Cabinet – 20”	FILCABXL0020		X
Media Filter Cabinet –16”	FILCABXL0016	X	

X = Used with the model furnace

AIR DELIVERY - CFM (BOTTOM RETURN WITH FILTER)

UNIT SIZE	WIRE LEAD COLOR	FUNCTION SPEED TAP [2, 3]	EXTERNAL STATIC PRESSURE (IN.W.C.)									
			0.1	0.2	0.3	0.4	0.5	0.6	0.7	0.8	0.9	1.0
060E17--16	Gray	Cooling. Do not use for Heating	1670	1635	1595	1555	1515	1475	1435	1395	1360	1315
	Yellow	Alt. Cooling. Do not use for Heating	1465	1420	1385	1345	1310	1265	1225	1180	1135	1095
	Blue	Heating or Alt. Cooling	1215	1170	1125	1085	1050	1005	965	925	880	830
	Orange	Alt. Heating or Alt. Cooling	1120	1065	1025	980	940	900	860	815	770	720
	Red	Alt. Cooling. Do not use for Heating	945	895	855	805	765	715	670	625	570	530
080E21--20	Gray [5, 6]	Cooling. Do not use for Heating	2165	2135	2115	2070	2025	1980	1930	1885	1835	1790
	Blue [5, 6]	Heating or Alt. Cooling	1800	1755	1715	1670	1620	1575	1525	1475	1425	1380
	Yellow	Alt. Heating or Alt. Cooling	1645	1595	1550	1510	1460	1410	1365	1315	1265	1220
	Orange	Alt. Cooling. Do not use for Heating	1505	1450	1410	1360	1310	1265	1215	1170	1120	1080
	Red [7]	Alt. Cooling. Do not use for Heating	885	785	705	645	570	495	430	360	295	–
100E21--20	Gray [5, 6]	Cooling Do not use for Heating	2215	2180	2140	2100	2065	2035	1995	1960	1925	1890
	Blue [5, 6]	Heating or Alt Cooling	1890	1850	1810	1770	1730	1690	1650	1610	1565	1520
	Yellow	Alt Cooling. Do not use for Heating	1695	1650	1605	1560	1515	1475	1425	1380	1325	1280
	Orange	Alt Cooling. Do not use for Heating	1270	1215	1155	1100	1040	980	925	865	810	765
	Red [7]	Alt Cooling. Do not use for Heating	800	715	630	550	475	390	320	–	–	–
100E21--22	Gray [5, 6]	Cooling Do not use for Heating	2185	2145	2110	2070	2025	1985	1950	1915	1880	1840
	Blue [5, 6]	Heating or Alt Cooling	1910	1865	1820	1775	1730	1690	1645	1595	1545	1500
	Yellow	Alt Cooling. Do not use for Heating	1705	1655	1610	1560	1510	1460	1400	1345	1295	1245
	Orange	Alt Cooling. Do not use for Heating	1495	1440	1385	1330	1270	1205	1145	1090	1030	970
	Red [7]	Alt Cooling. Do not use for Heating	845	745	655	560	445	–	–	–	–	–

NOTE:

1. A filter is required for each return–air inlet. Airflow performance includes a 3/4–in. (19 mm) washable filter media such as contained in a factory–authorized accessory filter rack. See accessory list in Product Data sheet. To determine airflow performance without this filter, assume an additional 0.1 in. w.c. available external static pressure.
2. **ADJUST THE BLOWER SPEED TAPS AS NECESSARY FOR THE PROPER AIR TEMPERATURE RISE FOR EACH INSTALLATION.**
3. The "Function" column identifies which speed taps can be used for heating.
4. If the same motor speed tap is needed for heating and cooling, a Jumper Wire accessory kit is available, see Product Data sheet for the current Jumper Wire accessory part number. Reference the "Start–up, Adjustments, and Safety Check" section for further Jumper Wire instructions.
5. Airflows over 1800 CFM require bottom return, two–side return, or bottom and side return. A minimum filter size of 20" x 25" (508 x 635 mm) is required.
6. For upflow applications, air entering from one side into both the side of the furnace and a return air base counts as a side and bottom return.
7. The "–" entry indicates an unstable operating condition.

MAXIMUM ALLOWABLE EXPOSED VENT LENGTH IN UNCONDITIONED SPACE - FT.

Winter Design Temp °F	Unit Size	60,000 BTUH											
		Uninsulated				3/8-in. Insulation				1/2-in. Insulation			
	Pipe Dia. in.	1 ½	2	2 ½	3	1 ½	2	2 ½	3	1 ½	2	2 ½	3
	20	20	30	30	25	20	75	65	60	20	85	75	65
	0	15	15	10	10	20	40	30	25	20	45	40	30
	-20	10	5			20	25	20	15	20	30	25	20
	-40	5				20	15	15	10	20	20	15	10

Winter Design Temp °F	Unit Size	80,000 BTUH														
		Uninsulated					3/8-in. Insulation					1/2-in. Insulation				
	Pipe Dia. in.	1 ½	2	2 ½	3	4	1 ½	2	2 ½	3	4	1 ½	2	2 ½	3	4
	20	15	40	40	35	30	15	50	90	75	65	15	50	70	70	70
	0	15	20	15	10	5	15	50	45	35	30	15	50	50	40	35
	-20	15	10	5			15	35	30	20	15	15	40	30	25	15
	-40	10	5				15	25	20	15	5	15	30	25	20	10

Winter Design Temp °F	Unit Size	100,000 BTUH											
		Uninsulated				3/8-in. Insulation				1/2-in. Insulation			
	Pipe Dia. in.	2	2 ½	3	4	2	2 ½	3	4	2	2 ½	3	4
	20	20	50	40	35	20	80	95	80	20	80	105	90
	0	20	20	15	10	20	55	45	35	20	65	55	45
	-20	15	10	5		20	35	30	20	20	45	35	25
	-40	10	5			20	25	20	10	20	30	25	15

MAXIMUM EQUIVALENT VENT LENGTH - FT.

Table 1 – Maximum Equivalent Vent Length

NOTE: Maximum Equivalent Vent Length (MEVL) includes standard and concentric vent termination and does NOT include elbows. Use Table 2 - Deductions from Maximum Equivalent Vent Length to determine allowable vent length for each application.

Unit Size		60,000				80,000					100,000			
Altitude (feet)	Pipe Dia. (in)	1 ½	2	2 ½	3	1 ½	2	2 ½	3	4	2	2 ½	3	4
	0–2000	20	100	175	200	15	55	130	175	200	20	80	175	200
	2001–3000		95	165	185	10	49	125	165	185	15	75	165	185
	3001–4000	16	90	155	175			115	155	175				175
	4501–5000	15	80	145	165	10	44	110	145	160	10	65	150	165
	5001–5400		75	140	155		41	100	135	150			140	155

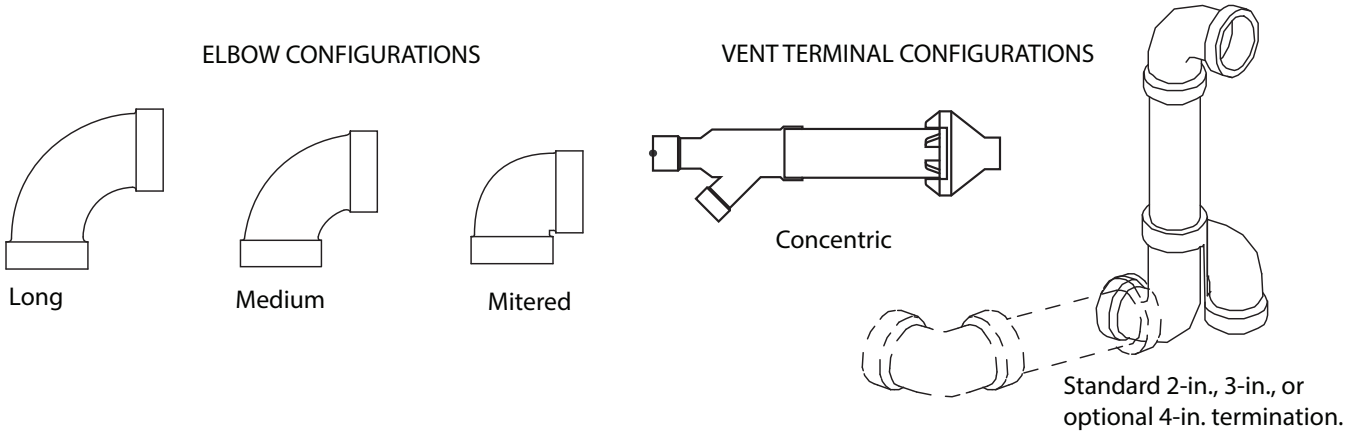

A13110

Table 2 – Deductions from Maximum Equivalent Vent Length - Ft. (M)

Pipe Diameter (in):	1-1/2		2		2-1/2		3		4	
Mitered 90º Elbow	8	(2.4)	8	(2.4)	8	(2.4)	8	(2.4)	8	(2.4)
Medium Radius 90º Elbow	5	(1.5)	5	(1.5)	5	(1.5)	5	(1.5)	5	(1.5)
Long Radius 90º Elbow	3	(0.9)	3	(0.9)	3	(0.9)	3	(0.9)	3	(0.9)
Mitered 45º Elbow	4	(1.2)	4	(1.2)	4	(1.2)	4	(1.2)	4	(1.2)
Medium Radius 45º Elbow	2.5	(0.8)	2.5	(0.8)	2.5	(0.8)	2.5	(0.8)	2.5	(0.8)
Long Radius 45º Elbow	1.5	(0.5)	1.5	(0.5)	1.5	(0.5)	1.5	(0.5)	1.5	(0.5)
Tee	16	(4.9)	16	(4.9)	16	(4.9)	16	(4.9)	16	(4.9)
Concentric Vent Termination	NA		0	(0.0)	NA		0	(0.0)	NA	
Standard Vent Termination	0	(0.0)	0	(0.0)	0	(0.0)	0	(0.0)	0	(0.0)

NOTES:
1. Use only the smallest diameter pipe possible for venting. Over–sizing may cause flame disturbance or excessive vent terminal icing or freeze–up.
2. NA – Not allowed. Pressure transducer will not close, or flame disturbance may result.
3. Vent sizing for Canadian installations over 4500 ft. (1370 M) above sea level are subject to acceptance by the local authorities having jurisdiction.
4. Size both the combustion air and vent pipe independently, then use the larger size for both pipes.
5. Assume the two 45° elbows equal one 90° elbow. Wide radius elbows are desirable and may be required in some cases.
6. Elbow and pipe sections within the furnace casing and at the vent termination should not be included in vent length or elbow count.
7. The minimum pipe length is 5 ft. (2 M) linear feet (meters) for all applications.
8. Use 3–in. (76 mm) diameter vent termination kit for installations requiring 4–in. (102 mm) diameter pipe.

Venting System Length Calculations

The Total Equivalent Vent Length (TEVL) for **EACH** combustion air or vent pipe equals the length of the venting system, plus the equivalent length of elbows used in the venting system from Table 2.

Standard vent terminations or factory accessory concentric vent terminations count for zero deduction.

See vent system manufacturer's data for equivalent lengths of flexible vent pipe or other termination systems. **DO NOT ASSUME** that one foot of flexible vent pipe equals one foot of straight PVC/ABS DWV vent pipe.

Compare the Total Equivalent Vent Length to the Maximum Equivalent Vent Lengths in Table 1.

Example 1

A direct-vent 60,000 BTUH furnace installed at 2100 ft. (640M). Venting system includes **FOR EACH PIPE:**
70 feet (22 M) of vent pipe, 65 feet (20 M) of combustion air inlet pipe, (3) 90º long-radius elbows, (2) 45º long-radius elbows, and a factory accessory concentric vent kit.
Can this application use 2" (50 mm ND) PVC/ABS DWV vent piping?

Measure the required linear length of air inlet and vent pipe; insert the longest of the two here					70 ft. (22 M)	Use length of the longer of the vent or air inlet piping system
Add equiv length of (3) 90º long-radius elbows (use the highest number of elbows for either the vent or inlet pipe)	3	x	3 ft. (0.9 M)	=	9 ft. (2.7 M)	From Table 2
Add equiv length of (2) 45º long-radius elbows (use the highest number of elbows for either the vent or inlet pipe)	2	x	1.5 ft. (0.5 M)	=	3 ft. (0.9 M)	From Table 2
Add equiv length of factory concentric vent term					0 ft.	From Table 2
Add correction for flexible vent pipe, if any					0 ft.	From Vent Manufacturer's instructions; zero for PVC/ABS DWV
Total Equivalent Vent Length (TEVL)					82 ft. (25 M)	Add all of the above lines
Maximum Equivalent Vent Length (MEVL)					95 ft. (29 M)	For 2" pipe from Table 1
Is TEVL less than MEVL?					**YES**	**Therefore, 2" pipe MAY be used**

Example 2

A direct-vent 60,000 BTUH furnace installed at 2100 ft. (640M). Venting system includes **FOR EACH PIPE:**
100 feet (30 M) of vent pipe, 95 feet (29 M) of combustion air inlet pipe, (3) 90º long-radius elbows, and a polypropylene concentric vent kit. Also includes 20 feet (6.1 M) of flexible polypropylene vent pipe, included within the 100 feet (30 M) of vent pipe.
VERIFY FROM POLYPROPYLENE VENT MANUFACTURER'S INSTRUCTIONS for the multiplier correction for flexible vent pipe.
Can this application use 60mm o.d. (2") polypropylene vent piping? If not, what size piping can be used?

Measure the required linear length of **RIGID** air inlet and vent pipe; insert the longest of the two here: 100 ft. Of rigid pipe – 20 ft. Of flexible pipe				=	80 ft. (24 M)	Use length of the longer of the vent or air inlet piping system
Add equiv length of (3) 90º long-radius elbows (use the highest number of elbows for either the vent or inlet pipe)	3	x	5 ft. (1.5 M)	=	15 ft. (4.6 M)	Example from polypropylene vent manufacturer's instructions, Verify from vent manufacturer's instructions.
Add equiv length of 45º long-radius elbows (use the highest number of elbows for either the vent or inlet pipe)	0	x		=	0 ft. (0 M)	
Add equiv length of factory concentric vent term	9	x	3.3 ft (0.9 M)	=	30 ft. (9 M)	
Add correction for flexible vent pipe, if any	2*	x	20 ft. (6.1 M)	=	40 ft. (12.2 M)	
* VERIFY FROM VENT MANUFACTURER'S INSTRUCTIONS; For example only, assume 1 meter of flexible 60mm (2") or 80mm (3") polypropylene pipe equals 2.0 meters (6.5 ft.) of PVC/ABS pipe.						
Total Equivalent Vent Length (TEVL)					165 ft. (50 M)	Add all of the above lines
Maximum Equivalent Vent Length (MEVL)					95 ft. (29 M)	For 2" pipe from Table 1
Is TEVL less than MEVL?					**NO**	**Therefore, 60mm (2") pipe may NOT be used; try 80mm (3")**
Maximum Equivalent Vent Length (MEVL)					185 ft. (57 M)	For 3" pipe from Table 1
Is TEVL less than MEVL?					**YES**	**Therefore, 80mm (3") pipe MAY be used**

RETURN AIR TEMPERATURE

This furnace is designed for continuous return-air minimum temperature of 60°F (15°C) db or intermittent operation down to 55°F (13°C) db such as when used with a night setback thermometer. Return-air temperature must not exceed 80°F (27°C) db. Failure to follow these return air limits may affect reliability of heat exchangers, motors and controls.

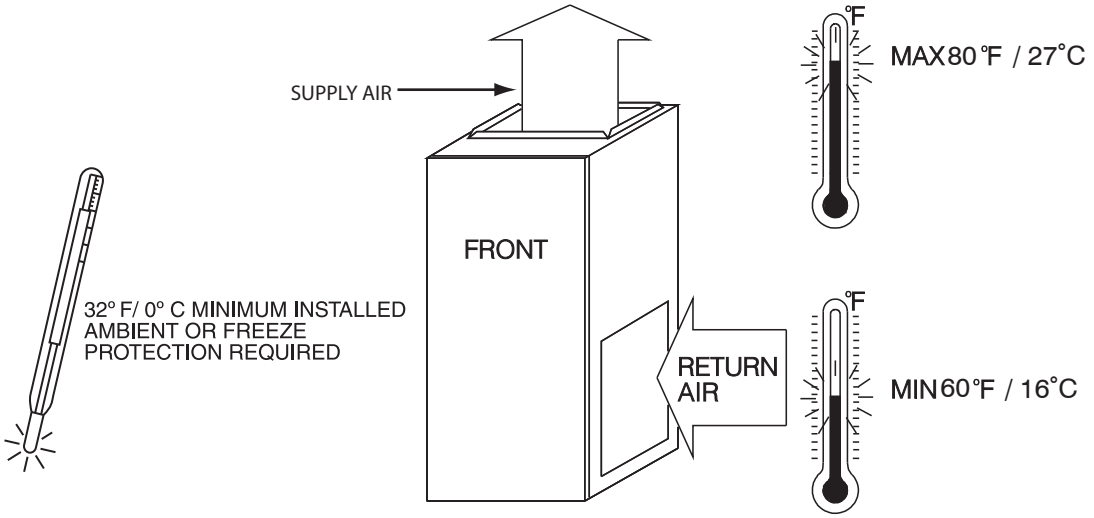

A10490

MINIMUM CLEARANCES TO COMBUSTIBLE MATERIALS

POSITION	CLEARANCE
Rear	1 in.
Front (Combustion air openings in furnace and in structure)	1 in.
Required for service**	24 in.*
All Sides of Supply Plenum**	1 in.
Sides	1 in.**
Vent	0
Top of Furnace	1 in.

* Consult local building codes.
**Additional clearance is required for condensate trap installation.
NOTE: Furnace edge contact is permissible with combustible materials unless local codes state otherwise.

COMBUSTION-AIR PIPE FOR NON-DIRECT (1-PIPE) VENT APPLICATION

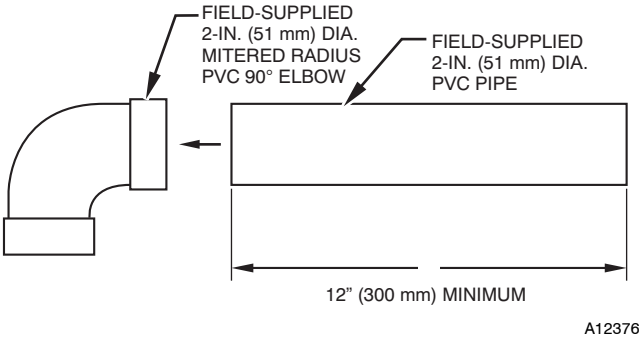

NOTE: See Installation Instructions for specific venting configurations.

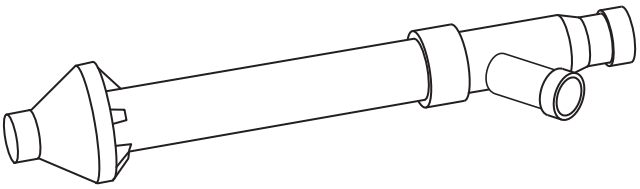

Concentric Vent Kit

A93086

A concentric vent kit allows vent and combustion-air pipes to terminate through a single exit in a roof or side wall. One pipe runs inside the other allowing venting through the inner pipe and combustion air to be drawn in through the outer pipe.

MEDIA FILTER CABINET (OPTIONAL ACCESSORY)

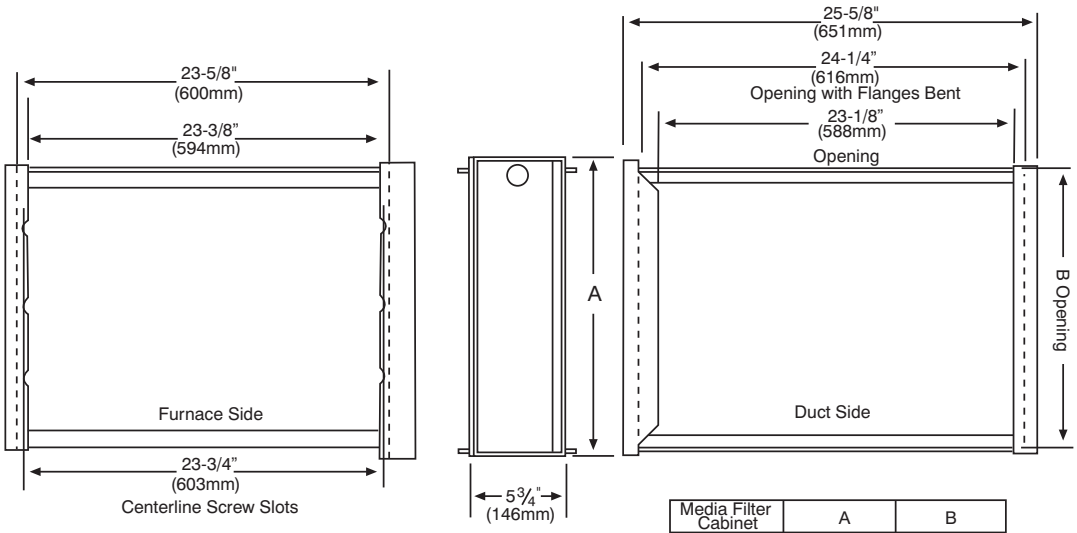

Media Filter Cabinet	A	B
16" (406mm)	17" (432mm)	16" (406mm)
20" (508mm)	21" (533mm)	20" (508mm)
24" (610mm)	25" (635mm)	24" (610mm)

NOTE: Media cabinet is matched to the bottom opening on furnace. May also be used for side return.

A12428

TYPICAL WIRING SCHEMATIC

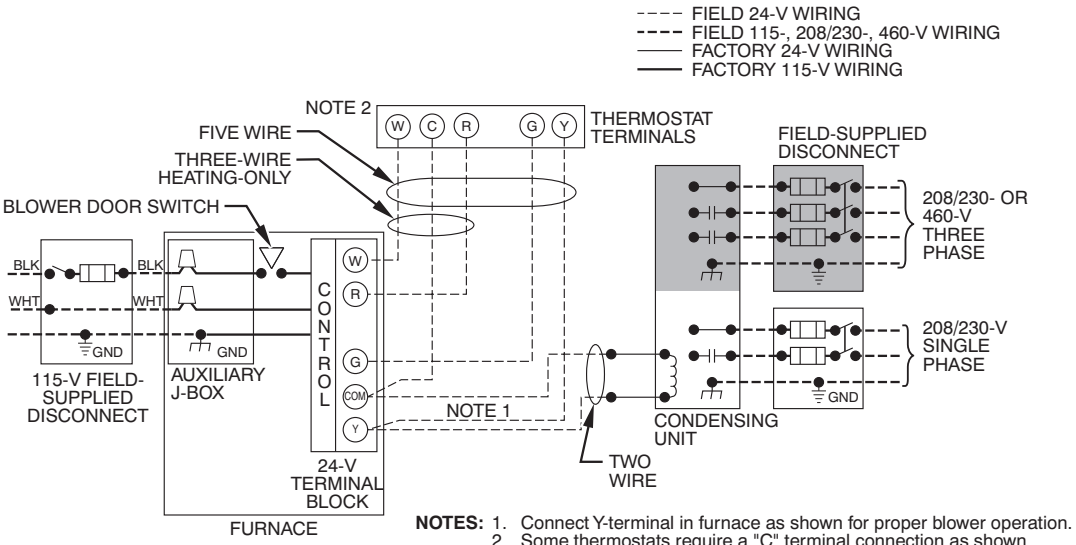

NOTES: 1. Connect Y-terminal in furnace as shown for proper blower operation.
2. Some thermostats require a "C" terminal connection as shown.
3. If any of the original wire, as supplied, must be replaced, use same type or equivalent wire.

A11387

DIMENSIONAL DRAWING

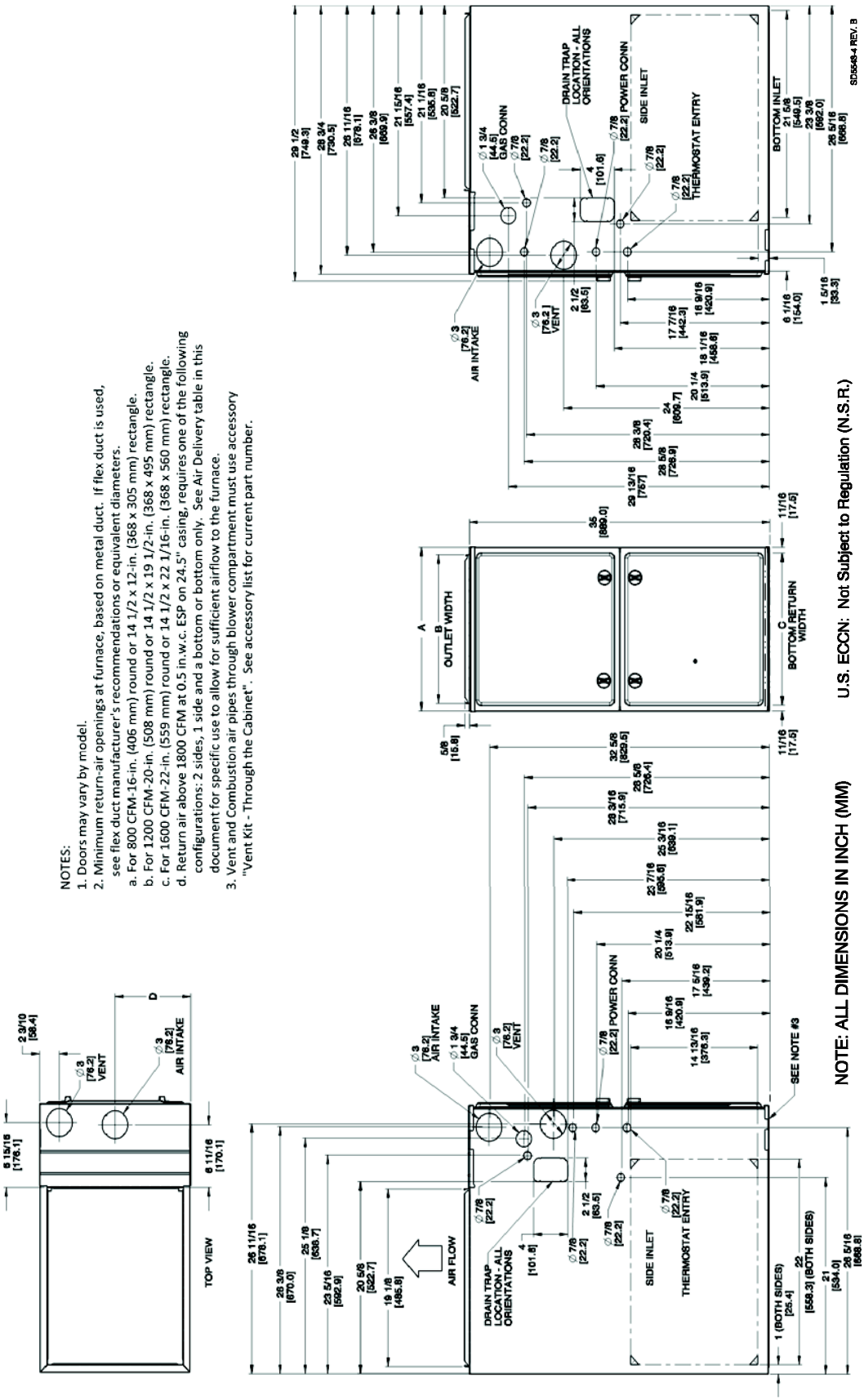

A190253

FURNACE SIZE	A	B	C	D	SHIP WT. LB (KG)
	CABINET WIDTH	OUTLET WIDTH	BOTTOM INLET WIDTH	AIR INTAKE	
060E17--16	17 – 1/2 (445)	15 – 7/8 (403)	16 (406)	8 – 3/4 (222)	149.4 (67.8)
080E21--20	21 (533)	19 – 3/8 (492)	19 – 1/2 (495)	10 – 1/2 (267)	167.4 (75.9)
100E21--20	21 (533)	19 – 3/8 (492)	19 – 1/2 (495)	10 – 1/2 (267)	174.4 (79.1)
100E21--22	21 (533)	19 – 3/8 (492)	19 – 1/2 (495)	10 – 1/2 (267)	175.4 (79.1)

GUIDE SPECIFICATIONS

General

System Description

Furnish a _____ Upflow/Horizontal gas-fired condensing furnace for use with natural gas.

Quality Assurance

Unit will be designed, tested and constructed to the current ANSI Z 21.47/CSA 2.3 design standard for gas-fired central furnaces.

Unit will be third party certified by CSA to the current ANSI Z 21.47/CSA 2.3 design standard for gas-fired central furnaces. Unit will carry the CSA Blue Star® label. Unit efficiency testing will be performed per the current DOE test procedure as listed in the Federal Register.

Unit will be certified for capacity and efficiency and listed in the latest AHRI Consumer's Directory of Certified Efficiency Ratings.

Unit will carry the current Federal Trade Commission Energy Guide efficiency label.

Delivery, Storage, and Handling

Unit will be shipped as single package only and is stored and handled per unit manufacturer's recommendations.

Warranty (for inclusion by specifying engineer)

U.S. only. Warranty certificate available upon request.

Equipment

Blower Wheel and ECM Blower Motor

Galvanized blower wheel shall be centrifugal type, statically and dynamically balanced. Blower motor of ECM type shall be permanently lubricated with sealed ball bearings, of _____hp, and have multiple speeds from 600-1200 RPM operating only when 24-VAC motor inputs are provided. Blower motor shall be direct drive and soft mounted to the blower housing to reduce vibration transmission.

Filters

Furnace shall have reusable-type filters. Filter shall be _____ in. (mm) X _____ in. (mm). An accessory highly efficient Media Filter is available as an option. _____ Media Filter.

Casing

Casing shall be of .030 in. thickness minimum, pre-painted steel.

Draft Inducer Motor

Draft inducer motor shall be variable-speed design.

Primary Heat Exchangers

Primary heat exchangers shall be tubular stainless steel sectional design and applied operating under negative pressure.

Secondary Heat Exchangers

Secondary heat exchangers shall be of a stainless steel flow-through of fin-and-tube design and applied operating under negative pressure.

Controls

Controls shall include a micro-processor-based integrated electronic control board with service troubleshooting codes displayed via diagnostic flashing LED light on the control, a self-test feature that checks all major functions of the furnace, and a replaceable automotive-type circuit protection fuse. Multiple operational settings available, including blower speeds for heating and cooling.

Operating Characteristics

Heating capacity shall be _____ Btuh input; _____ Btuh output capacity.

Fuel Gas Efficiency shall be _____AFUE.

Air delivery shall be _____ cfm minimum at 0.50 in. W.C. external static pressure.

Dimensions shall be: depth_____in. (mm); width _____in. (mm); height_____in. (mm) (casing only). Height shall be_____in. (mm) with A/C coil and _____in. (mm) overall with plenum.

Electrical Requirements

Electrical supply shall be 115 volts, 60 Hz, single-phase (nominal). Minimum wire size shall be _____AWG; maximum fuse size of HACR-type designated circuit breaker shall be _____ amps.

Special Features

Refer to section of the product data identifying accessories and descriptions for specific features and available enhancements.

Copyright 2019 Carrier Corp. • 7310 W. Morris St. • Indianapolis, IN 46231 . Edition Date: 12/19

Catalog No: 59SU5A−03PD

Manufacturer reserves the right to change, at any time, specifications and designs without notice and without obligations.

Replaces: 59SU59A−02PD