Product Data

Air to Water Monobloc Outdoor Unit
Space-heating Water Heater Indoor Unit

Outdoor Unit Models D3CMWAN0200281AK, D3CMWAN0340431AK, D3CMWAN0510781AK
Indoor Unit Models D0CMWAN020028, D0CMWAN034043, D0CMWAN051078

NOTES:
Read the entire instruction manual before starting the installation.

Images are for illustration purposes only. Actual models may differ slightly.

Specifications subject to change without notice

Product Information

The air to water heat pump is designed for heating/cooling of a building and heating domestic hot water. The unit consists of two modules:

Outdoor Unit

The working principle of the unit is to capture heat from the environment and to transfer it to the heating circuit in the building. The low-temperature heat of the air is transferred through an evaporator to the heat pump system filled with a refrigerant, which turns into a gas as it evaporates. From the evaporator, the gas is drawn in by the compressor, which raises its temperature during its compression and directs it to the condenser. In the condenser, heat is transferred to the refrigerant, which fills the central heating system, and the cooled liquid flows through the expansion valve and returns to the evaporator, after which the whole process starts again. In the case of cooling, this cycle is reversed and the heat is extracted from the building and discharged outside.

Refrigeration circuit

All the components of the refrigeration circuit are located in the outdoor module, including the refrigeration circuit controller with an electronic expansion valve. Depending on the operating conditions, the compressor power is adjusted by means of an inverter. When the space cooling function is activated, the refrigeration circuit is reversed.

Plumbing system

The indoor and outdoor modules are connected to each other via heating medium hydronic lines. A high-efficiency circulation pump (secondary pump) built into the indoor module supplies the heating medium to the secondary circuit. A central 3-way diverter valve: “heating/DHW heating” is responsible for switching between space heating and hot tap water heating.

Heat pump controller

The entire heating system is monitored and controlled by the heat pump controller.
The heat pump controller is integrated into the indoor module. Communication between the indoor and outdoor modules takes place via a communication bus.

Indoor Unit

The working principle of the unit is based on the demand-dependent capacity control of the heat pump compressor with an activation of the electrical auxiliary heater via the controller of the indoor module. The indoor module controller regulates the heating output according to a pre-set heating curve. If the heat pump is not able to cover the building’s heating demand on its own, the controller automatically activates the electrical auxiliary heater which, together with the heat pump produces the desired heating medium temperature.

Outdoor temperature ranges for air-to-water heat pumps

Air-to-water heat pumps use the outdoor air as the heat source. Operation is only efficient within certain outdoor temperature ranges, e.g. between -13°F and 113°F (-25°C and +43°C). If the upper temperature limit is exceeded or the lower temperature limit has been reached, heat pumps switch off periodically. A corresponding notification appears on the heat pump controller. To cover the heat demand for space heating and tap water heating beyond the temperature limits, the heat pump controller automatically switches on the available auxiliary heating equipment, e.g. electric auxiliary heating, if necessary.

Required equipment

A communication bus cable between the outdoor unit and the indoor unit.
Recommended: LiYY 2 X 22 AWG (0.34mm^2)
Maximum: LiYY 2 X 18 AWG (1.5mm^2)

Installation with heating/cooling buffer storage tank

- Space heating
The heat pump may heat up to 2 heating circuits: 1 heating circuit without a mixer and 1 heating circuit with a mixer.
- Space cooling
The heat pump may cool up to 2 cooling circuits.

6241231 - 03

Applicability

⚠ CAUTION

The serial number must be provided when ordering replacement parts. Some replacement parts are not backwards compatible with previous versions of the air to water heat pump.

IMPORTANT

When ordering replacement parts, provide either the 10-digit serial number which is found on either the indoor unit rating plate or outdoor unit rating plate.

Indoor Unit:

Model No.	Serial No.
D0CMWAN020028	N□□□□□B□□□□□
D0CMWAN034043	N□□□□□B□□□□□
D0CMWAN051078	N□□□□□B□□□□□

Outdoor Unit:

Model No.	Serial No.
D3CMWAN0200281AK	N□□□□□A□□□□□
D3CMWAN0340431AK	N□□□□□A□□□□□
D3CMWAN0510781AK	N□□□□□A□□□□□

Certifications

Indoor Unit

UL CERTIFIED SAFETY US-CA SÛRETÉ US-CA E548027 Space-heating Water Heater

Outdoor Unit

ETL LISTED C US Intertek

AHRI CERTIFIED® www.ahridirectory.org Air-Cooled Water Chilling Packages AHRI Standards 550/590 and 551/591

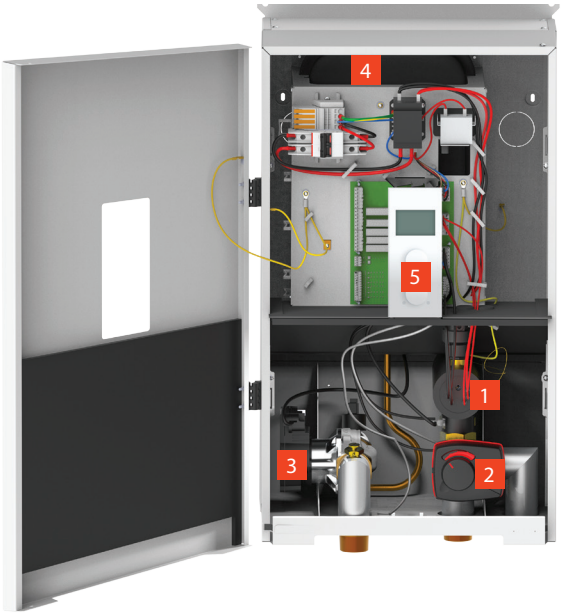

Product may not be exactly as shown

1. Integrated resistive heating element
2. Integrated Space Heating/DHW Production diverting valve
3. Integrated system pump
4. Integrated system expansion tank
5. Monochrome digital interface

Product may not be exactly as shown

1. Coil
2. Fan
3. Compressor
4. Brazed plate heat exchanger

Indoor Unit Technical Data

Indoor Unit		Model	D0CMWAN-020028	D0CMWAN-034043	D0CMWAN-051078
Electrical Data					
Power Supply		Voltage	230 VAC	230 VAC	230 VAC
		Phase	1	1	1
		Hertz	60	60	60
		Amperage (FLA)	31	31	43
		Maximum Fuse (Amps)	40	40	50
Electric Heater Output		kW (BTU)	6 (20500)	6 (20500)	9 (30700)
		Heating Element Amperage	25	25	37
Heating Elements			2	2	3
Hydronic Data					
Hydronic connection			1¼ NPT (Male Threads)	1¼ NPT (Male Threads)	1¼ NPT (Male Threads)
Min. Operating Pressure		PSI (bar)	8 (0.5)	8 (0.5)	8 (0.5)
Max. Operating Pressure		PSI (bar)	30 (2)	30 (2)	30 (2)
Max. System Temperature		°F (°C)	140 (60)	140 (60)	140 (60)
Max. DHW Temperature		°F (°C)	167 (75)	167 (75)	167 (75)
Max. Operating Temperature		°F (°C)	165 (74)	165 (74)	165 (74)
Fixed High Limit		°F (°C)	186 (86)	186 (86)	186 (86)
Expansion vessel volume		USG (l)	3.2 (12)	3.2 (12)	3.2 (12)
Expansion vessel precharge		PSI (bar)	14 (1)	14 (1)	14 (1)
Minimum flow		GPM (m^3/h)	2.6 (0.6)	3.1 (0.7)	3.7 (0.85)
Maximum flow		GPM (m^3/h)	4.4 (1.0)	7.5 (1.7)	12.8 (2.9)
Pressure drop		ft. of hd (kPa)	0.6 (2)	1.6 (5)	5.0 (15)
Residual Head*1		ft. of hd (kPa)	17 (50)	17 (50)	17 (50)
Minimum Relief Valve Capacity		MBH	510	510	510
Dimensional Data					
Dimensions	Height	in. (mm)	28-½ (723)	28-½ (723)	28-½ (723)
	Width	in. (mm)	16-¼ (416)	16-¼ (416)	16-¼ (416)
	Depth	in. (mm)	12-¾ (323)	12-¾ (323)	12-¾ (323)
Weight		lbs (kg)	64 (29)	64 (29)	64 (29)

*1 Residual head for the Indoor Unit internal pump, the residual head value takes into consideration pressure drop of the Indoor Unit, Outdoor Unit and supplied installation fittings at rated maximum flow rate of the Indoor Unit. The pressure drop through the piping between the IDU, ODU, buffer tank, and the coil of the indirect DHW tank, must not exceed the stated residual head in order to maintain optimal system performance.

Outdoor Unit Technical Data

Outdoor Unit		Model	D3CMWAN-0200281AK	D3CMWAN-0340431AK	D3CMWAN-0510781AK
Heating/Cooling Data					
Heating Capacity*1		MBH (kW)	20.5 (6.0)	34.0 (10)	58.0 (17)
COP (A5W110)*2			1.3	2.2	1.9
Cooling Capacity Range	Low	Tons (kW)	1.4 (4.9)	2.8 (9.8)	4.2 (14.7)
	High	Tons (kW)	1.5 (5.2)	2.9 (10.2)	4.3 (15.1)
Energy Efficiency Ratio (EER)			16.81	16.75	14.46
COP			4.927	4.909	4.238
Electrical Data					
Power Supply		Voltage	208/230 VAC	208/230 VAC	208/230 VAC
		Phase	1	1	1
		Hertz	60	60	60
Total Electrical Load		Amps	13.0	21.8	29.4
Compressor Load Rating		Amps	12.2	21.0	27.8
Fan Motor Load Rating		Amps	0.8	0.8	2 x 0.8
Minimum Circuit Ampacity		Amps	17	28	37
Maximum Overcurrent Protection		Amps	25	45	60
Refrigerant					
Refrigerant			R32	R32	R32
Factory Charge		lbs (kg)	2.43 (1.1)	3.97 (1.8)	4.41 (2.0)
Max. Allowable Pressure - Heating		PSIG (MPa)	725 (5.0)	740 (5.1)	972 (6.7)
Max. Allowable Pressure - Cooling		PSIG (MPa)	624 (4.3)	609 (4.2)	624 (4.3)
Max. Operating Pressure - Low Side		PSIG (MPa)	305 (2.1)	305 (2.1)	305 (2.1)
Max. Operating Pressure - High Side		PSIG (MPa)	638 (4.4)	638 (4.4)	638 (4.4)
Hydronic Data					
Hydronic connection			1 NPT (Male Threads)	1 NPT (Male Threads)	1 NPT (Male Threads)
Water Flow Rate		GPM (m^3/h)	3.7-8.8 (0.85-2.0)	6.2-15.0 (1.4-3.4)	11.4-25.5 (2.6-5.8)
Pressure drop		ft. of hd (kPa)	3.3 (10)	6.7 (20)	15.0 (45)
Maximum temperature of heating medium		°F (°C)	149 (65)	149 (65)	149 (65)
Air and Noise					
Maximum DC power of fan		W	85	170	2 x 75
Maximum air flow		CFM (m^3/h)	1765 (3000)	2650 (4500)	2 x 1470 (2 x 2500)
Minimum/maximum air temperature*3		°F (°C)	-13/109 (-25/43)	-13/109 (-25/43)	-13/109 (-25/43)
Maximum sound pressure level at 3.3 ft. (1m) distance		dB(A)	41	43	44
Maximum sound power level		dB(A)	54.8	58.0	60.8
Dimensional Data					
Dimensions (HXWXD)	Height	in. (mm)	31-¼ (795)	36-½ (928)	52-⅜ (1329)
	Width	in. (mm)	46 (1165)	50-¾ (1285)	49-¼ (1250)
	Depth	in. (mm)	15-¾ (400)	18-⅛ (460)	19-½ (495)
Weight		lbs (kg)	206 (93.5)	275 (124.5)	411 (186.5)

*1 Heating capacity based on a ambient air temper of 45°F (7°C) supply water temperature 95°F (35°C) and a 8°F (5°C) △t
*2 COP (A5W110) Coefficient of Performance at ambient air temperature of 5°F (-15°C) supply water temperature 110°F (43.3°C)
*3 Not intended for sale in a location that may exceed 109°F (43°C) ambient temperature.

Heating Performance D3CMWAN0200281AK

Heating Capacity*1

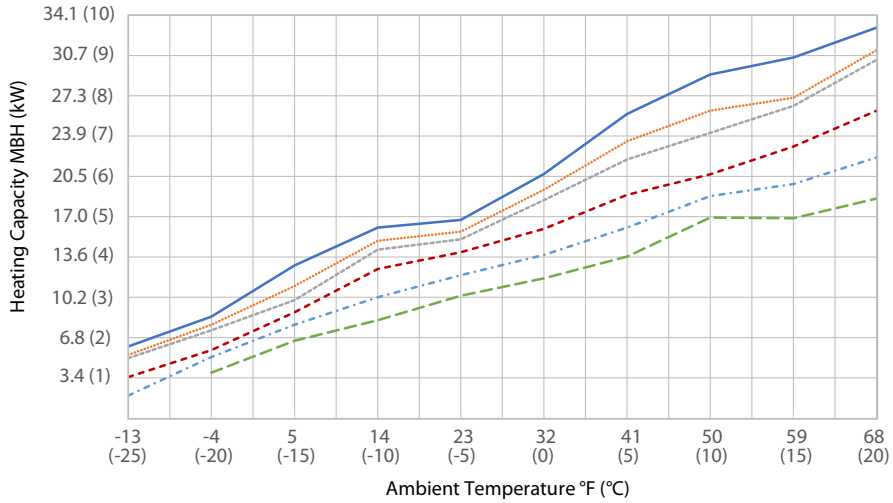

28 MBH Heating capacity at ambient air temperature of 45°F (7°C) and supply water temperature of 95°F (35°C).

Electrical Power Consumption*1

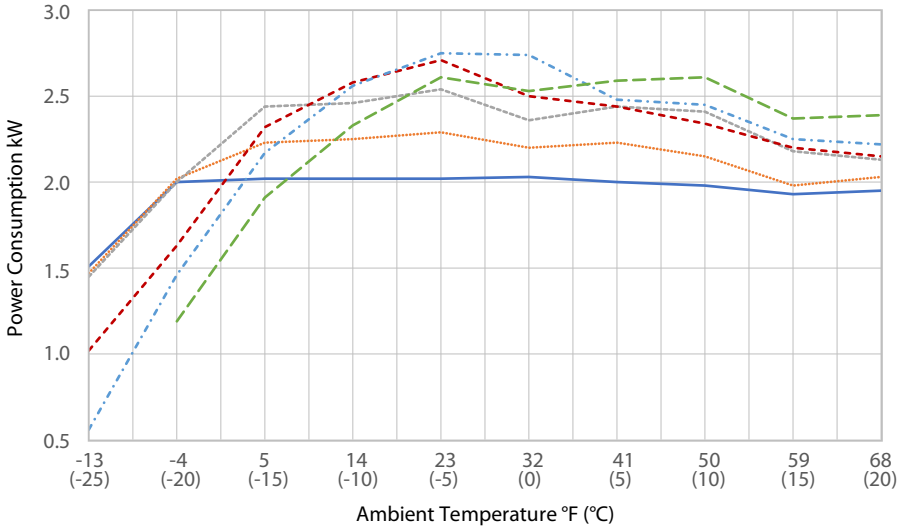

Coefficient of Performance*1

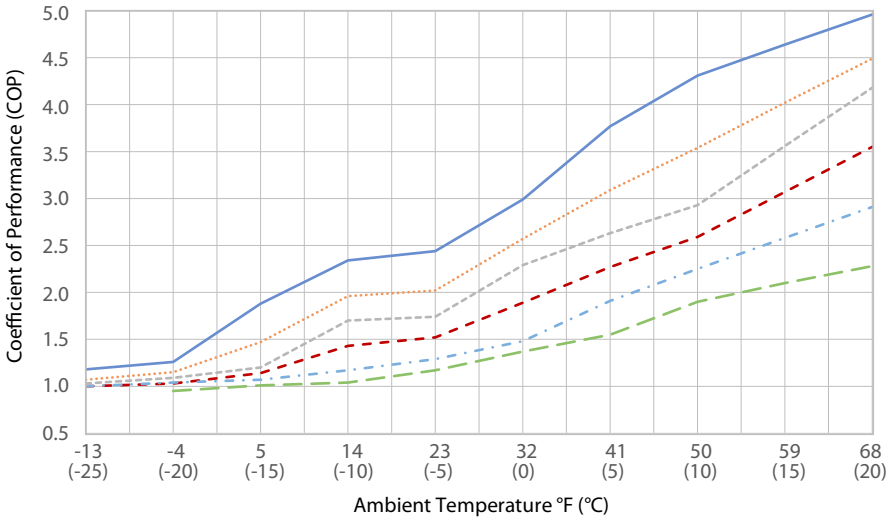

*1 Curves are based on 100% compressor modulation

6241231 - 03

Heating Performance D3CMWAN0340431AK

Heating Capacity*1

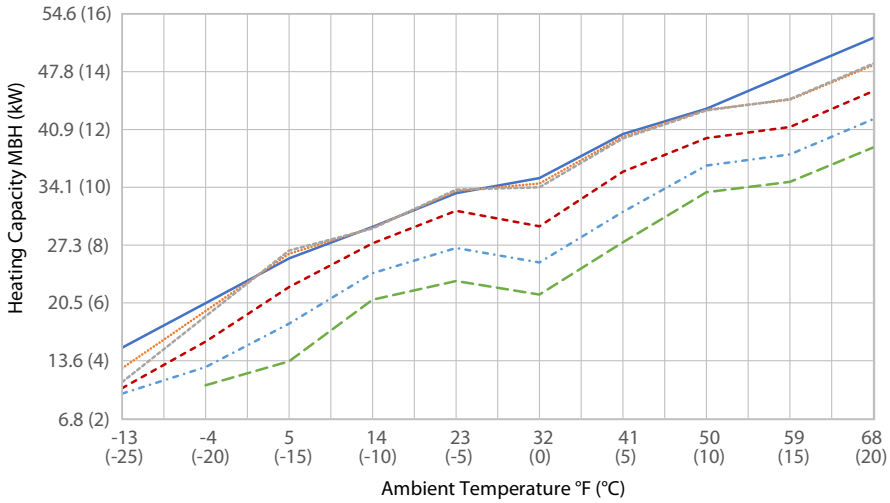

43 MBH Heating capacity at ambient air temperature of 45°F (7°C) and supply water temperature of 95°F (35°C).

Electrical Power Consumption*1

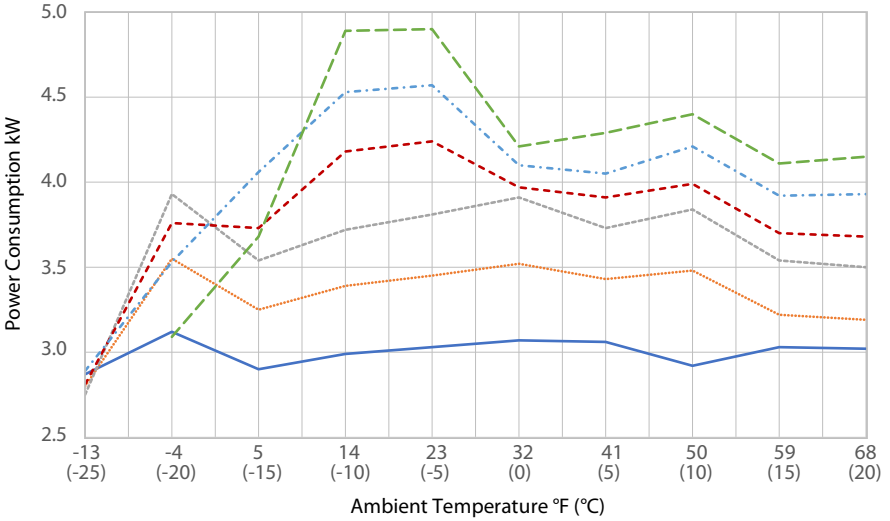

Coefficient of Performance*1

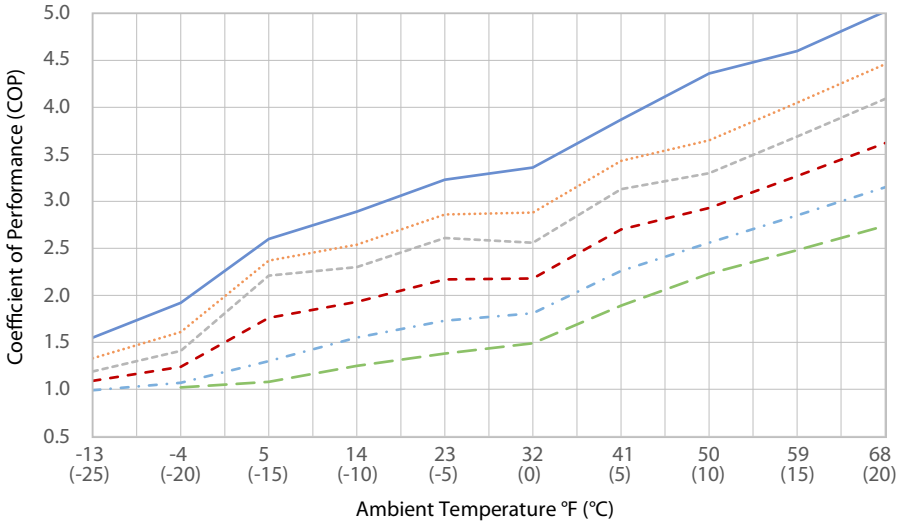

*1 Curves are based on 100% compressor modulation

Heating Performance D3CMWAN0510781AK

Heating Capacity*1

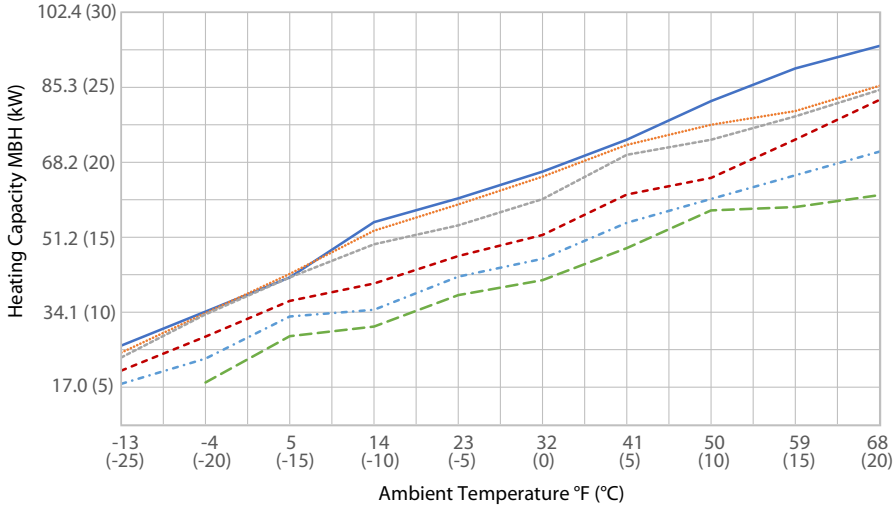

78 MBH Heating capacity at ambient air temperature of 45°F (7°C) and supply water temperature of 95°F (35°C).

Electrical Power Consumption*1

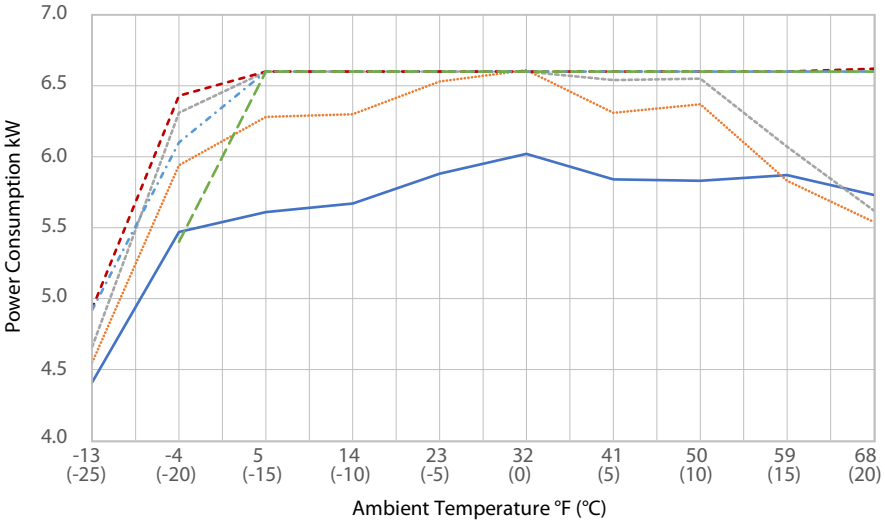

Coefficient of Performance*1

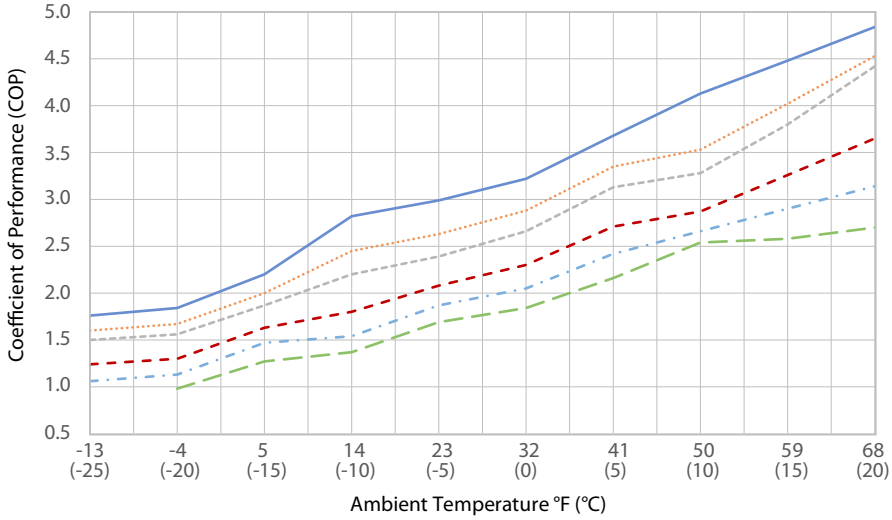

*1 Curves are based on 100% compressor modulation

6241231 - 03

Elevation Affects on Heating Performance

The elevation at which the air to water is installed has an effect on both the heating capacity of the heat pump and the efficiency. Use the following graphs to determine the derated capacity percentage, based on the elevation of the installation and apply the percentage to the selected heating capacity and coefficient of performance graphs.

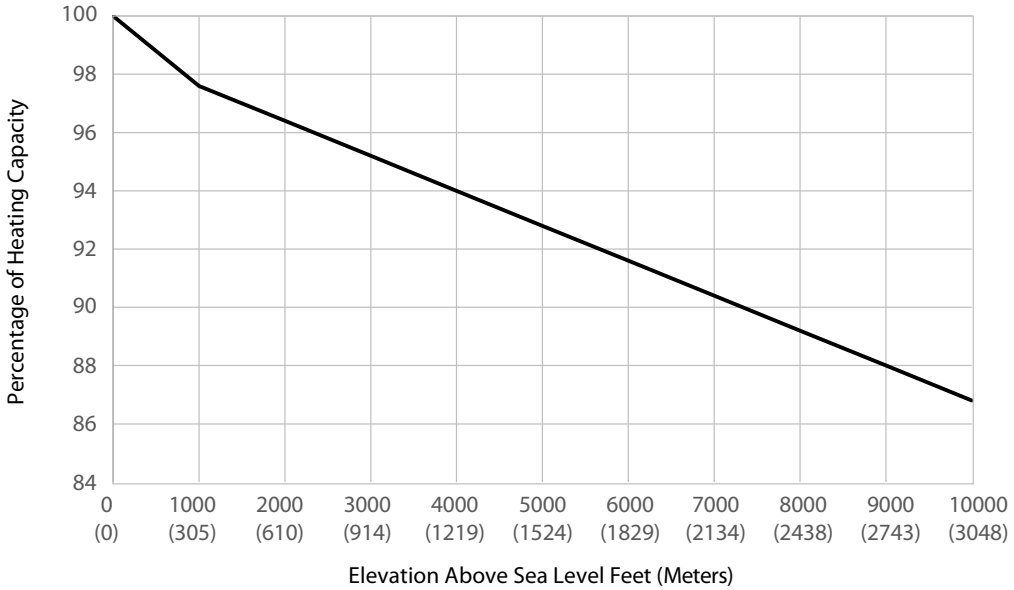

Example for heating capacity:

D3CMWAN0510781AK heat capacity curve for supply water temperature of 95°F (35°C), 78 MBH Heating capacity at ambient air temperature 45°F (7°C), installed at 2000 feet (610 meters) above sea level.

78 MBH X 96.5% = 75.27 MBH Heating capacity

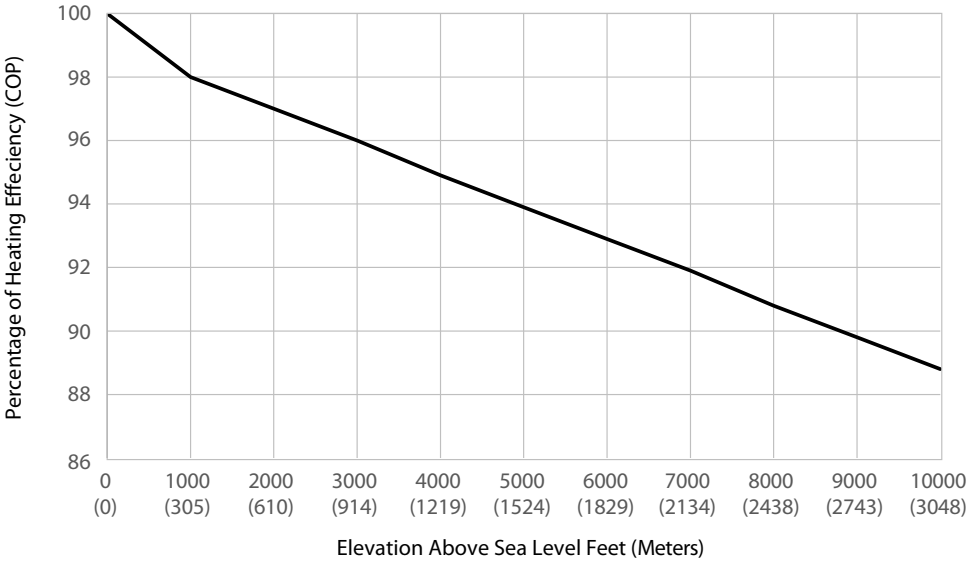

Example for heating efficiency:

D3CMWAN0510781AK coefficient of performance (COP) curve for supply water temperature of 95°F (35°C), 4.1 heating COP at ambient air temperature 45°F (7°C), installed at 2000 feet (610 meters) above sea level.

4.1 COP X 97% = 3.98 Heating COP

Cooling Performance D3CMWAN0200281AK

Cooling Capacity*1

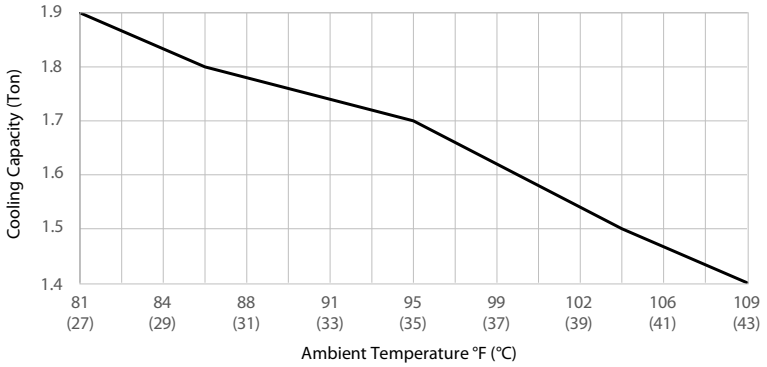

Electrical Power Consumption*1

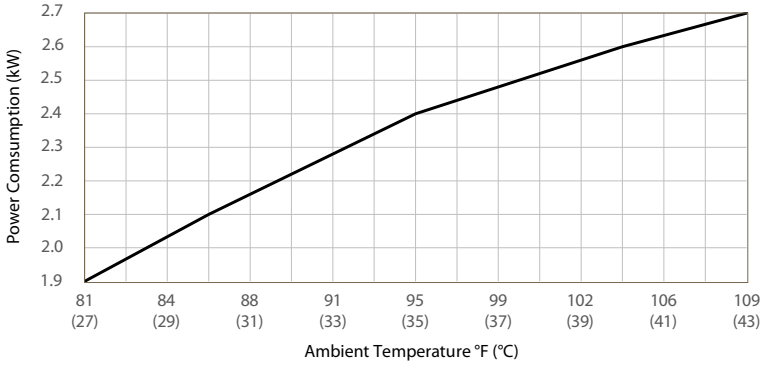

Energy Efficiency Ratio (EER)*1

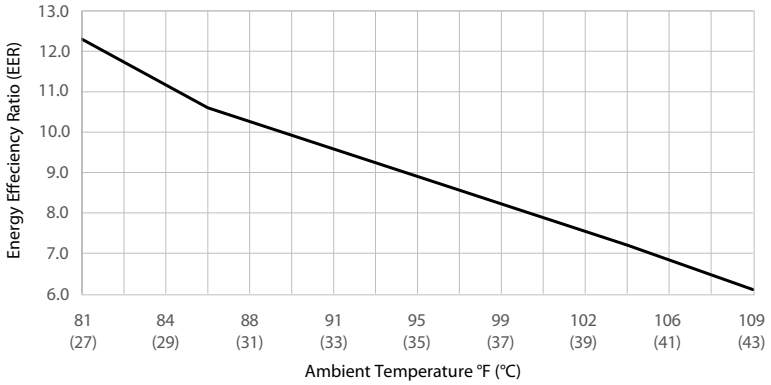

*1 Based on a supply water temperature of 45°F (7°C)

Performance with Evaporator Leaving Water Temperature 45 °F (7°C)

Condenser Entering Air Dry Bulb	°F(°C)	95(35)	80(27)	65(19)	55(13)
	Load %	100	75	50	25
Capacity	(kW)	5.00	3.75	2.50	1.25
Total Power	(kW)	1.90	0.88	0.45	0.22
Efficiency	EER	9.00	13.51	18.80	19.89
IPLV (EER)		16.49			

Cooling Performance D3CMWAN0340431AK

Cooling Capacity*1

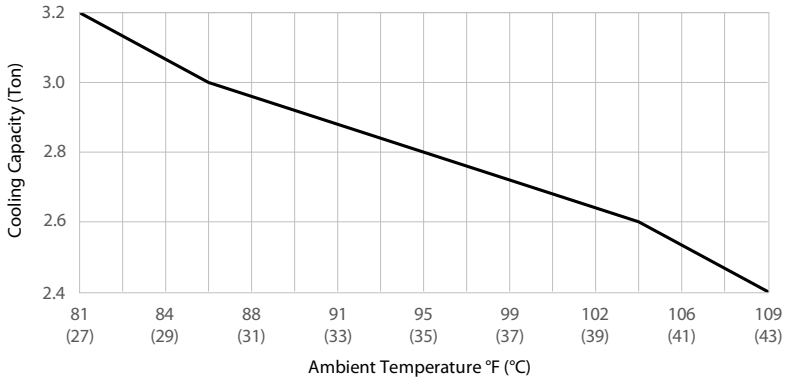

Electrical Power Consumption*1

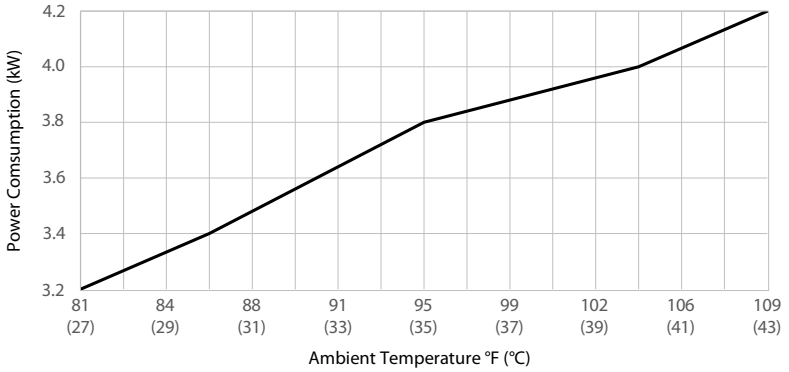

Energy Efficiency Ratio (EER)*1

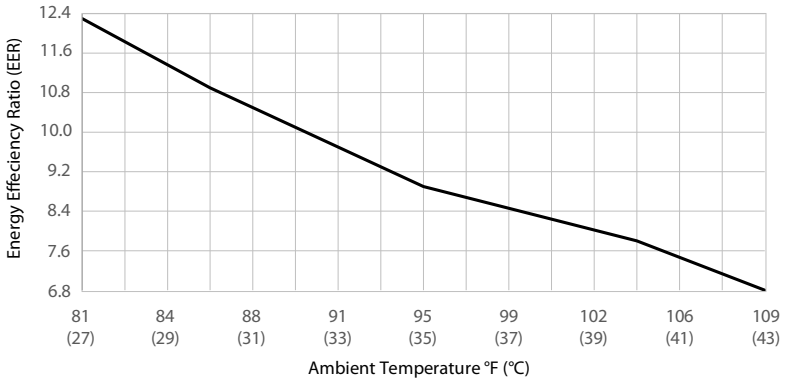

*1 Based on a supply water temperature of 45°F (7°C)

Performance with Evaporator Leaving Water Temperature 45 °F (7°C)

Condenser Entering Air Dry Bulb	°F(°C)	95(35)	80(27)	65(19)	55(13)
	Load %	100	75	50	25
Capacity	(kW)	10.0	7.5	5.0	2.5
Total Power	(kW)	3.81	1.88	0.88	0.45
Efficiency	EER	8.93	13.57	19.41	19.89
IPLV (EER)		16.91			

Cooling Performance D3CMWAN0510781AK

Cooling Capacity*1

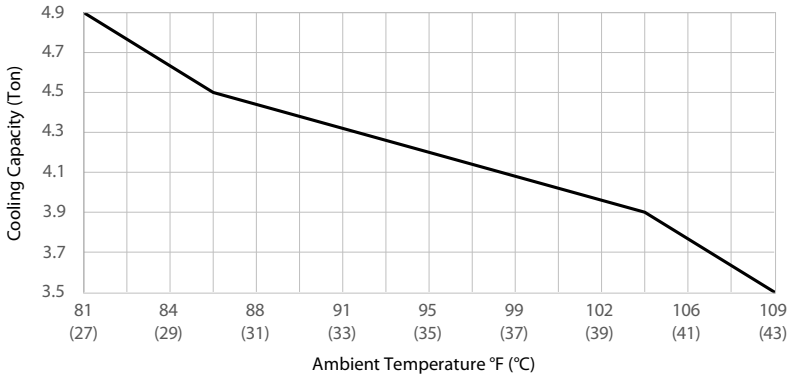

Electrical Power Consumption*1

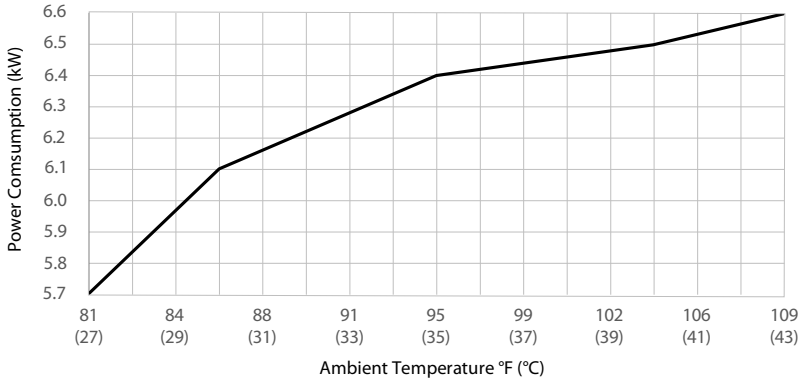

Energy Efficiency Ratio (EER)*1

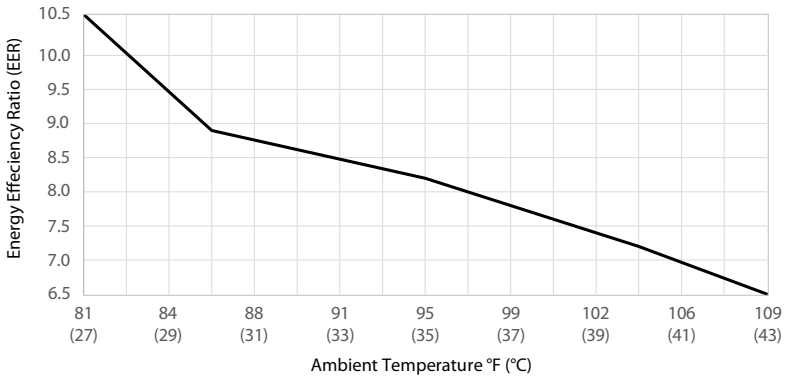

*1 Based on a supply water temperature of 45°F (7°C)

Performance with Evaporator Leaving Water Temperature 45 °F (7°C)

Condenser Entering Air Dry Bulb	°F(°C)	95(35)	80(27)	65(19)	55(13)
	Load %	100	75	50	25
Capacity	(kW)	15.00	11.25	7.50	3.75
Total Power	(kW)	6.44	3.51	1.62	0.71
Efficiency	EER	8.2	10.95	15.76	21.56
IPLV (EER)		14.36			

Elevation Affects on Cooling Performance

The elevation at which the air to water heat pump is installed has an effect on both the cooling capacity of the heat pump and the efficiency. Use the following graphs to determine the derated capacity percentage, based on the elevation of the installation and apply the percentage to the selected cooling capacity and Energy Efficiency Ratio (EER) of performance graphs.

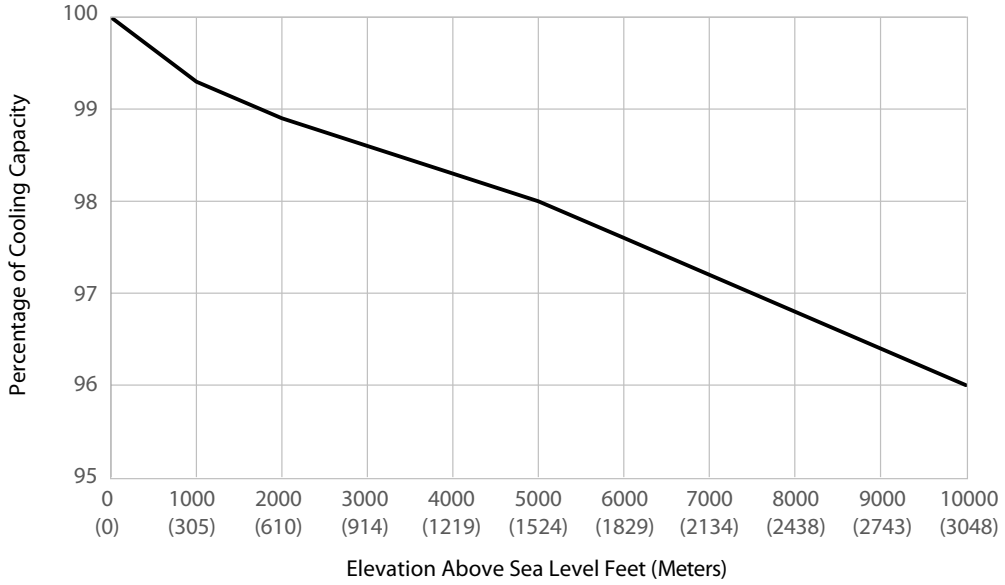

Example for cooling capacity:

D3CMWAN0510781AK cooling capacity curve for supply water temperature of 45°F (7°C), 4.3 tons Cooling capacity at ambient air temperature 91°F (33°C), installed at 2000 feet (610 meters) above sea level.

4.3 tons X 98.9% = 4.25 tons cooling capacity

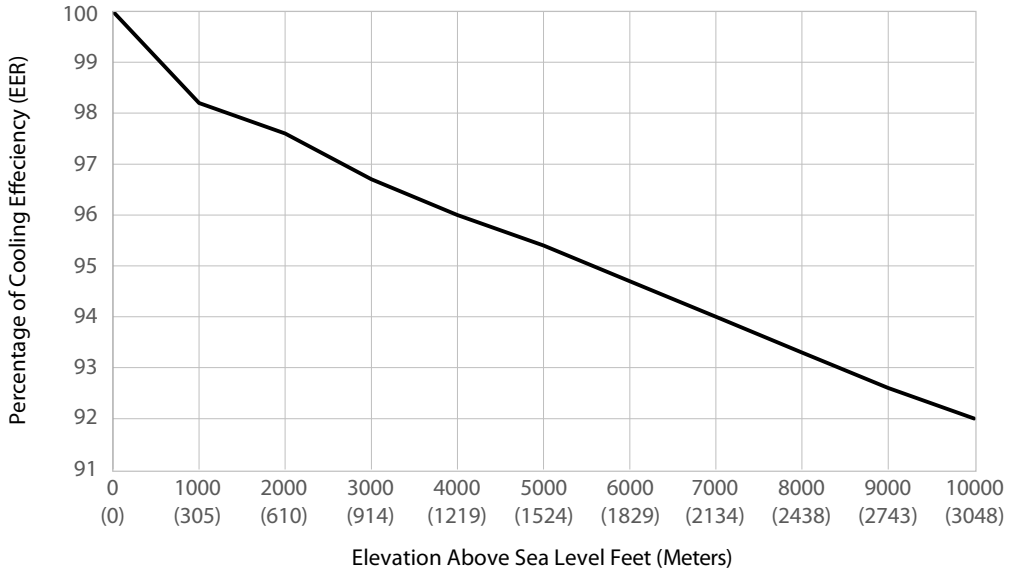

Example for cooling efficiency:

D3CMWAN0510781AK Energy Efficiency Ratio (EER) curve for supply water temperature of 45°F (7°C), 8.5 Energy Efficiency Ratio (EER) at ambient air temperature 91°F (33°C), installed at 2000 feet (610 meters) above sea level.

8.5 EER X 97.5% = 8.29 EER

Dimensions

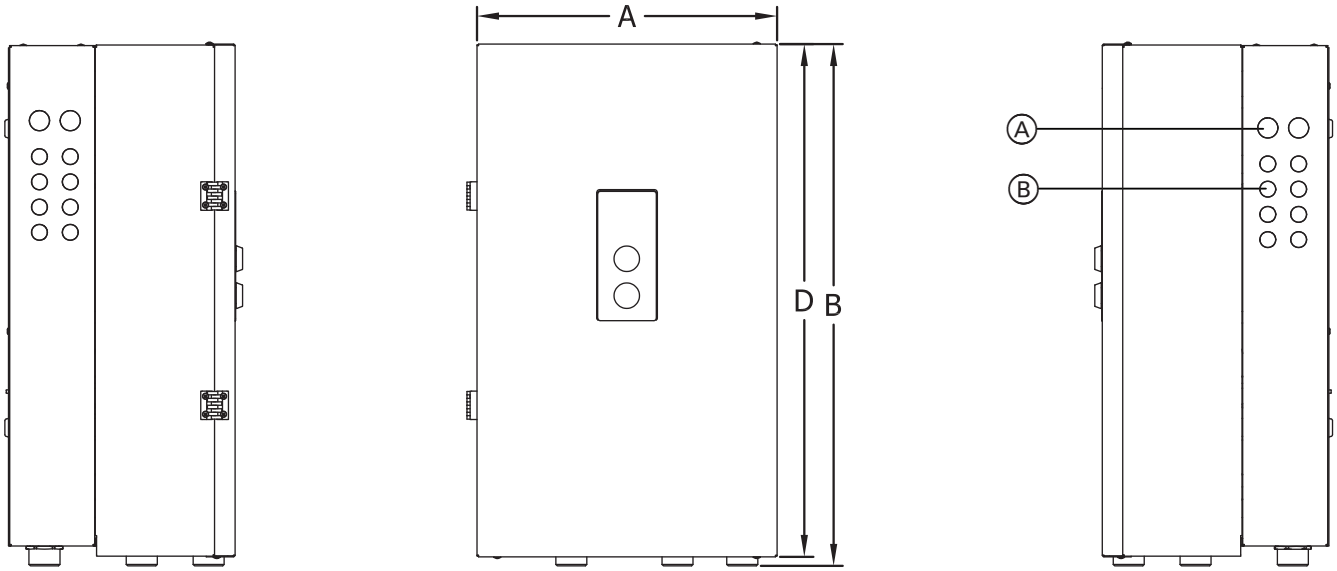

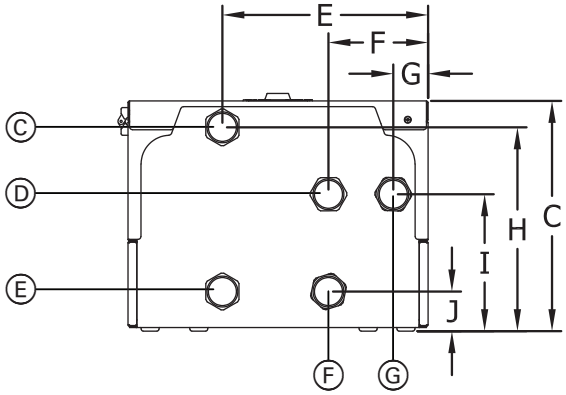

Dimensions in. (mm)

A	16-¼ (416)	F	5-½ (138)
B	28-½ (723)	G	2 (48)
C	12-¾ (323)	H	11-¼ (283)
D	28-¼ (717)	I	7-½ (190)
E	11-¼ (285)	J	2-¼ (55)

Legend

- (A) ¾ in. Electrical Knockouts (2 per side)
- (B) ½ in. Electrical Knockouts (8 per side)
- (C) Return to Heat Pump (1-¼ in. NPT)
- (D) Supply to Space Heating (1-¼ in. NPT)
- (E) DHW/Space Heating Return (1-¼ in. NPT)
- (F) Supply from Heat Pump (1-¼ in. NPT)
- (G) DHW Tank Heating Supply (1-¼ in. NPT)

Recommended Minimum Service Clearances

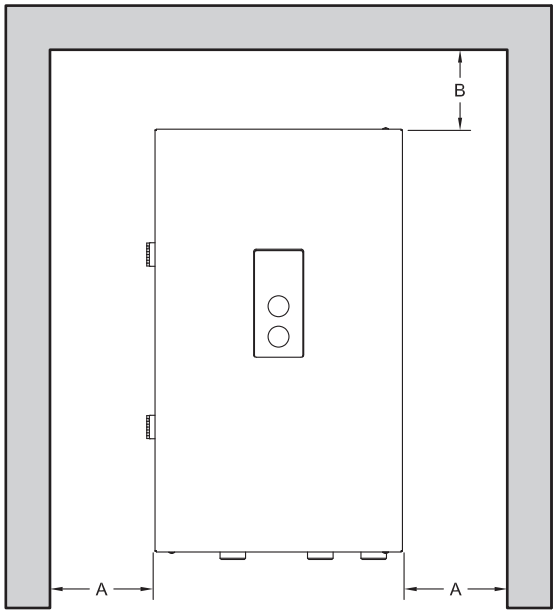

Recommended minimum service clearances

For typical installation, it is recommended to install the indoor unit with the clearances shown in the illustration.

A - 12 in. (300 mm)
B - 20 in. (500 mm)
Front Clearance 39 in. (1000 mm)

These dimensions reflect the recommended service clearance for the indoor unit only, ensure adequate clearance is left for the installation of piping and electrical connections.

Minimum Clearances to Combustibles

Top	Front	Rear	Left	Right
0	0 AL, CL	0	0	0

AL = Alcove CL = Closet
Floor: Combustible

Mounting the Indoor Unit

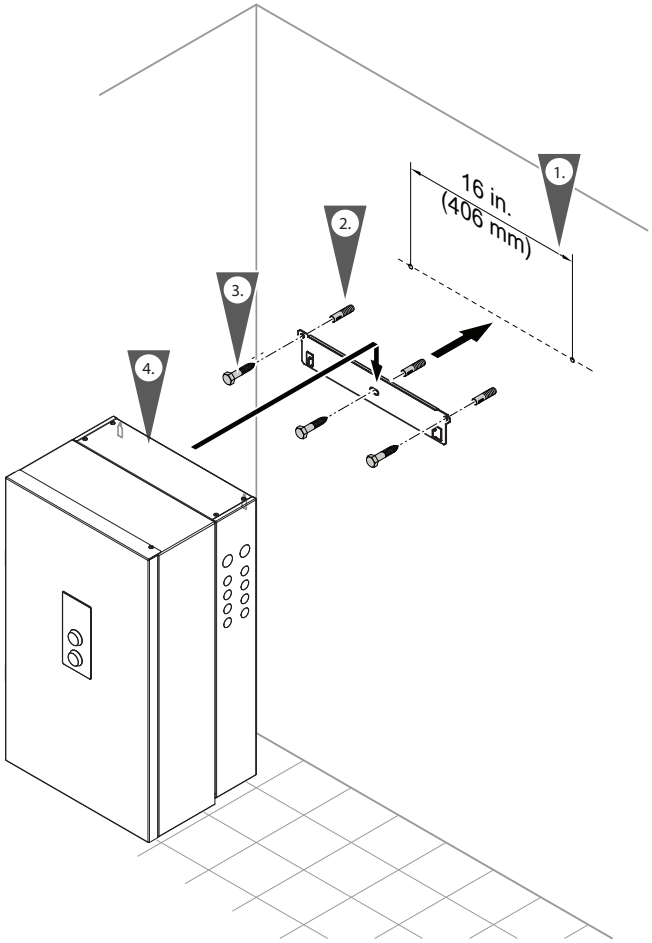

Installing the wall mounting bracket

The indoor unit can be wall-mounted on a concrete wall. Note: The enclosed screws and rawl plugs are only suitable for concrete. For other construction materials, use bolts and anchors that are suitable for 100 lb. (46 kg) loads.

Installation of mounting bracket on brick/concrete wall

1. Mark out the rawl plug holes.
2. Drill holes ∅⅜ in. (∅10 mm) and insert the rawl plugs supplied.
3. Fit the wall mounting bracket with the screws supplied.
4. Mount the indoor unit on the wall mounting bracket. Ensure that both tabs have locked into the indoor unit.

Note: Check the condition of the wall where the indoor unit is to be installed. For the suitability of the supplied rawl plugs for various building materials, see the manufacturer's instructions. For other construction materials, use fixing materials with sufficient load bearing capacity.

CAUTION
Whichever mounting method is used, ensure that the bracket is tightly and securely fastened to wall. Failure to secure indoor unit properly could cause indoor unit to loosen, posing a severe safety hazard.

Piping Connections

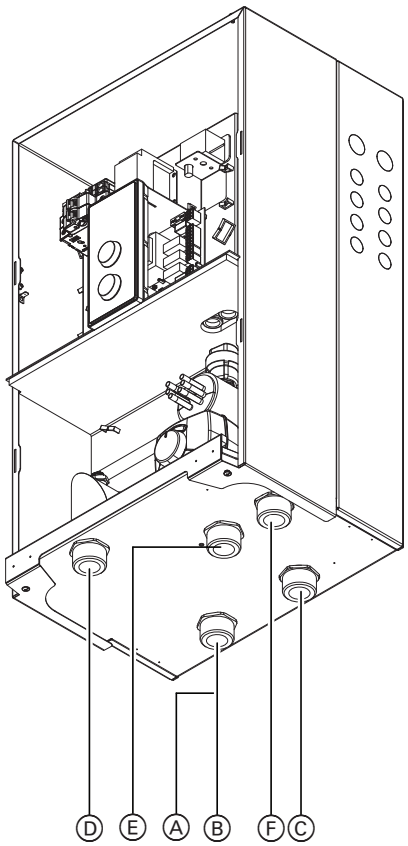

Legend

Ⓐ DHW tank heating return
Ⓑ Heating system return
Ⓒ Supply from the heat pump outdoor unit
Ⓓ Return to the heat pump outdoor unit
Ⓔ Heating system supply
Ⓕ DHW tank heating supply

Note: Install temperature gauge (field supplied) anywhere in the supply piping near the heat pump (not shown).

Proper piping practice
Support piping by proper suspension method. Piping must not rest on or be supported by indoor unit.

Connections on the heating water and DHW sides
If the connections have not been fitted previously, make the connections on the heating water and DHW sides.

Note: If no tank is connected, close off the DHW tank supply connection with a cap.

Heating water connections

1. Thoroughly flush heating system (particularly before connecting the heat pump to an existing system).
2. Connect indoor unit to the heating system.
   Note: Use an approved pipe sealant or Teflon tape when connecting the installation fittings.

Maximum allowable working pressure (MAWP): 30 psig (2 bar)

⚠ WARNING

Exposing the heat pump to pressures and temperatures in excess of those listed will result in damages, and will render warranty null and void.

- Use a two-hand wrench method when tightening fittings or piping onto the connectors. Use one wrench to prevent the pipes from twisting and the second wrench to tighten the fitting or piping. Failure to support the connection could damage the heat pump and its internal piping.
- All plumbing must meet or exceed all local state and national plumbing codes.

SUPPORT ALL PIPING USING HANGERS. DO NOT support piping by the indoor unit or its components.

- Use isolation valves to isolate system components.

General
A distance of 2 in. (50 mm) from uninsulated hot water pipes to combustible components must be maintained.
If the pipes are provided with a suitable pipe insulation of sufficient thickness and insulation, the distance mentioned above is not necessary (see also local regulations).

Safety Valve

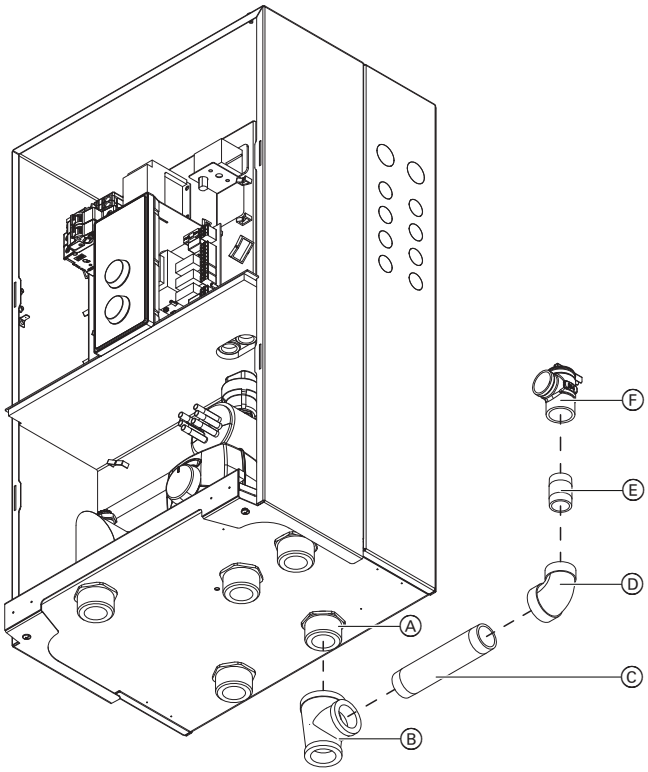

Legend

Ⓐ Supply from Outdoor Unit
Ⓑ 1-¼ X 1 X 1 Inch Brass Reducing Tee
Ⓒ 1 X 6 Inch Long Brass Nipple
Ⓓ 1 X ¾ Inch Brass Reducing Elbow
Ⓔ ¾ Inch Brass Close Nipple
Ⓕ 30 PSI Pressure Relief Valve

Installing the pressure relief valve:

1. Use the supplied fittings to install the pressure relief valve on the Supply from Outdoor Unit Connection of the Indoor Unit.

Minimum connection diameters:
Pressure relief valve..... ¾ in.
Discharge pipe ..... ¾ in.
Maximum operating pressure: 30 PSI (2 bar)
Minimum operating pressure: 8 PSI (0.5 bar)

Installing the discharge pipe:

1. Install discharge pipe on pressure relief valve in such a way that...
   - the end of the pipe is not threaded.
   - the pressure relief discharge pipe extends to a floor drain and ends approximately 6 in. (150 mm) above the drain.

Ensure that...
   - there is no shutoff valve installed in the discharge pipe.
   - discharge pipe diameter is not reduced.
   - discharge is not piped to outdoors.

⚠ IMPORTANT

Install the (approved) factory supplied pressure relief valve. Removal of air from the system must occur via use of air vent(s) in the system supply. To ensure the heat pump can be purged of all air, ensure supply/return water lines do not contain restrictive piping where air could be trapped.

⚠ WARNING

Do not install an isolation valve between heat pump and pressure relief valve. The discharge pipe for the pressure relief valve must be oriented to prevent scalding of attendants. Pipe pressure relief valve discharge pipe close to floor drain. Never pipe discharge pipe to the outdoors.

Installation Fittings

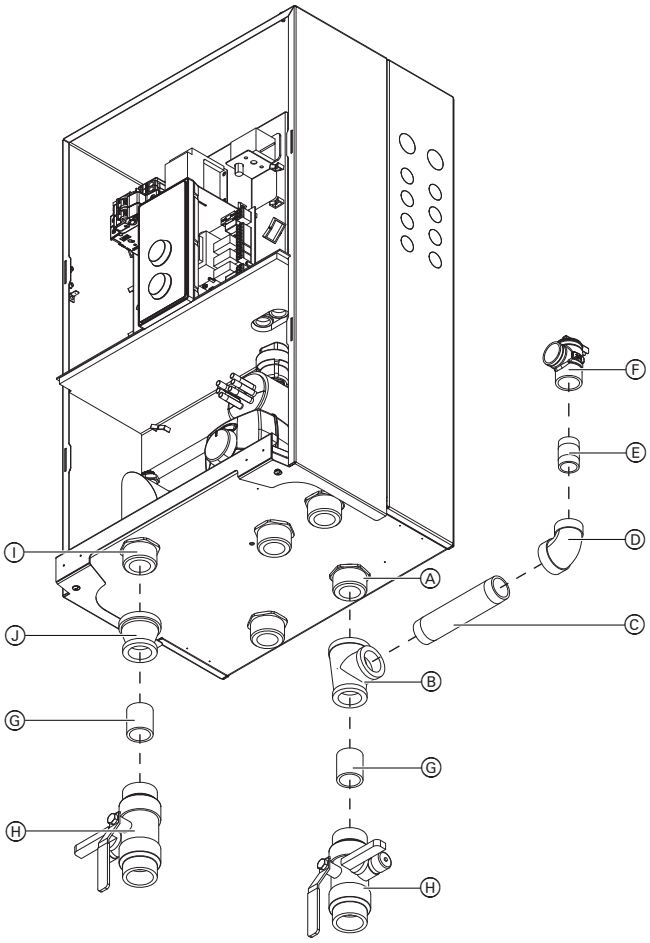

Installation Fittings

The indoor unit is supplied with the installation fittings described.

Legend

Ⓐ Supply from Outdoor Unit
Ⓑ 1-¼ X 1 X 1 Inch Brass Reducing Tee
Ⓒ 1 X 6 Inch Long Brass Nipple
Ⓓ 1 X ¾ Inch Brass Reducing Elbow
Ⓔ ¾ Inch Brass Close Nipple
Ⓕ 30 PSI Pressure Relief Valve
Ⓖ 1 Inch Brass Close Nipple
Ⓗ Drain/Fill/Isolate Ball Valve
Ⓘ Return to Outdoor Unit
Ⓙ 1-¼ X 1 Inch Brass Reducing Coupling

Domestic Hot Water

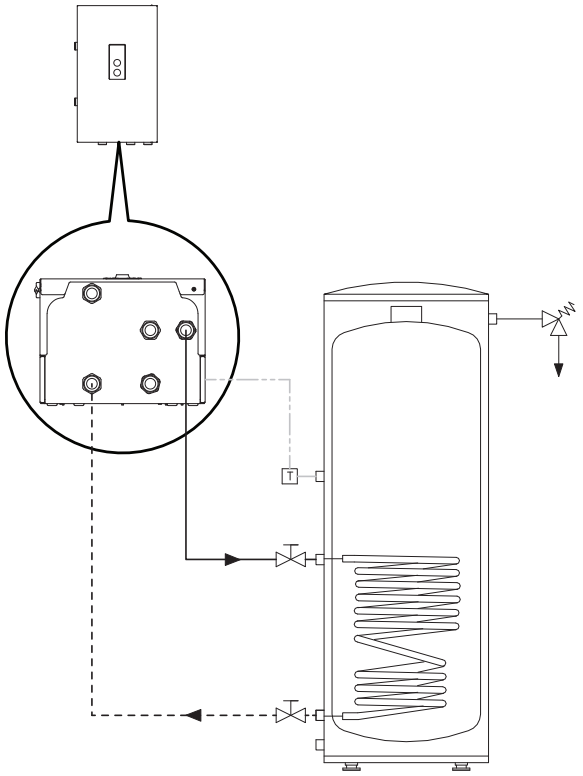

The air to water heat pump can be used in conjunction with the stand-alone DHW storage tanks.
For the connection of a stand-alone DHW tank, installation fittings (field supplied), and a DHW temperature sensor (supplied with heat pump) is required.

Size and select the DHW storage tank based on the forecasted DHW consumption of the building in question.

For further technical information on DHW storage tanks, see the tank Technical Data Manuals.

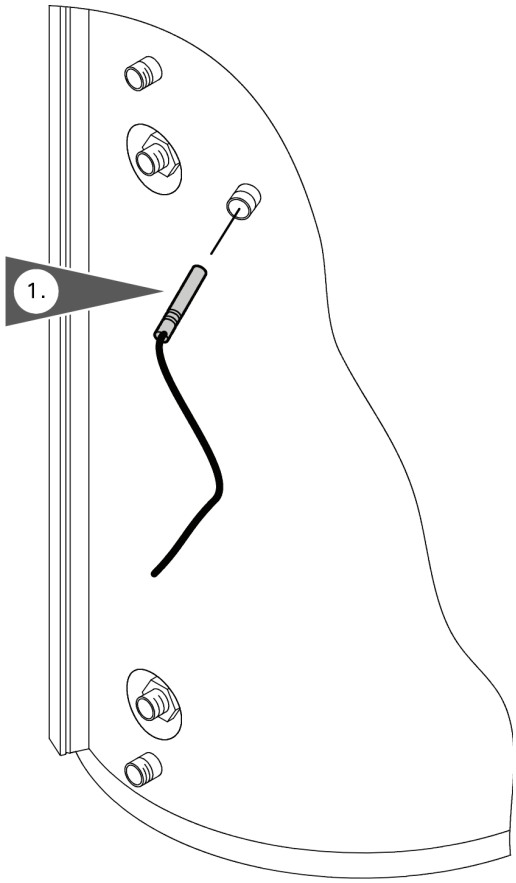

DHW storage tank information
The DHW sensor is required when using a stand-alone DHW storage tank with the heat pump. The heat pump is supplied with a DHW sensor (all other fittings are field supplied).

Making the DHW connections

1. With the recommended tanks, locate the DHW temperature sensor well and install the DHW temperature sensor using the installation instructions provided with the DHW storage tanks.

⚠ IMPORTANT

Follow the Installation Instructions supplied with the DHW storage tank when mounting and securing DHW tank temperature sensor.

⚠ WARNING

If a DHW storage tank other than the recommend tank is used, the installer must verify proper operation of the DHW tank temperature sensor with original manufacturer of the tank. It's strongly recommends the installation of a temperature tempering valve in the DHW supply line.

Dimensions

D3CMWAN0200281AK/D3CMWAN0340431AK Outdoor Unit

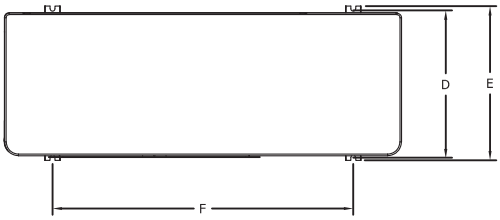

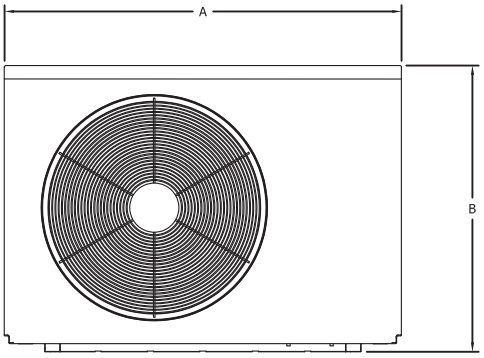

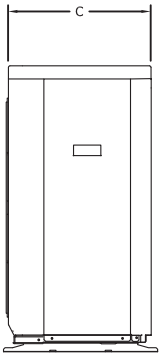

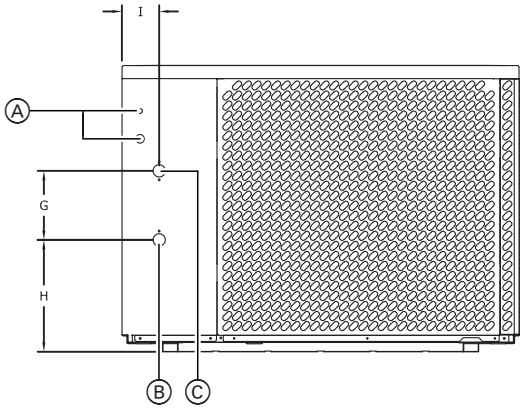

Dimensions in. (mm)

	D3CMWAN0200281AK	D3CMWAN0340431AK
A	46 (1165)	50-¾ (1285)
B	31-¼ (795)	36-½ (928)
C	15-¾ (400)	18-⅛ (460)
D	17 (428)	18-½ (470)
E	17-¾ (450)	20 (500)
F	32-⅝ (830)	38-⅜ (975)
G	9-⅛ (232)	8-⅝ (220)
H	13 (330)	14-⅛ (360)
I	6-½ (166)	4-⅝ (118)

Legend

Ⓐ - Electrical Connections
Ⓑ - Heat Pump Hydronic Return (1 in. NPT Male)
Ⓒ - Heat Pump Hydronic Supply (1 in. NPT Male)

Dimensions

D3CMWAN0510781AK Outdoor Unit

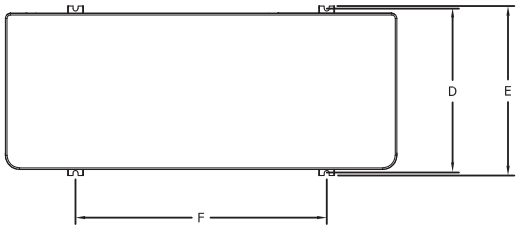

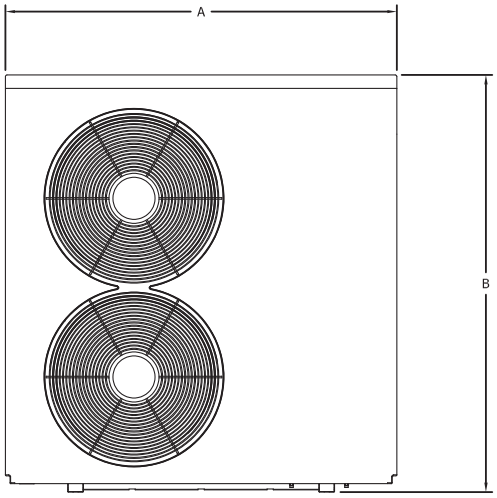

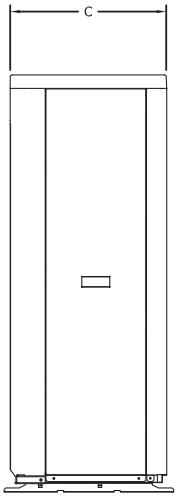

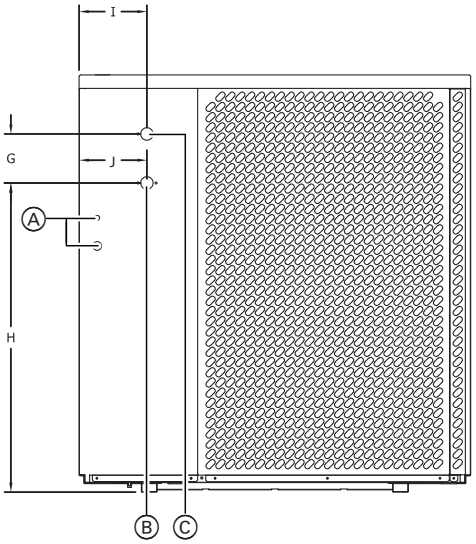

Dimensions in. (mm)

A	49-¼ (1250)	F	31-½ (800)
B	52-⅜ (1329)	G	6-⅛ (155)
C	19-½ (495)	H	37-¾ (983)
D	20-¼ (515)	I	8-½ (215)
E	21-¼ (540)	J	10 (252)

Legend

Ⓐ - Electric Connection
Ⓑ - Heat Pump Hydronic Return (1 in. NPT Male)
Ⓒ - Heat Pump Hydronic Supply (1 in. NPT Male)

Recommended Minimum Service Clearances

D3CMWAN0200281AK/D3CMWAN0340431AK Outdoor Unit

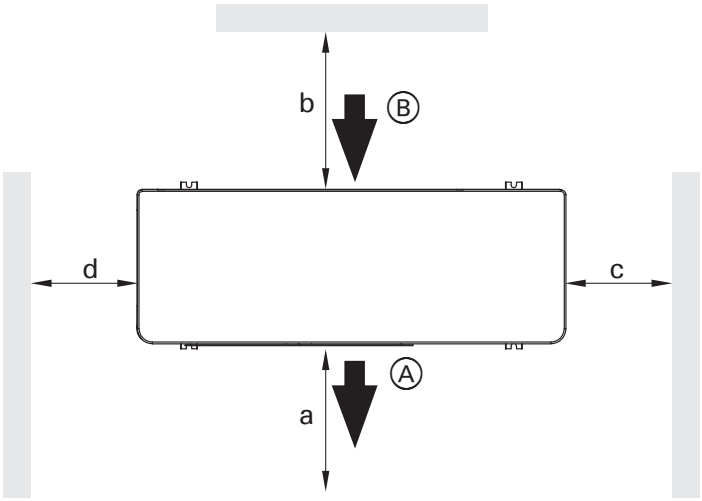

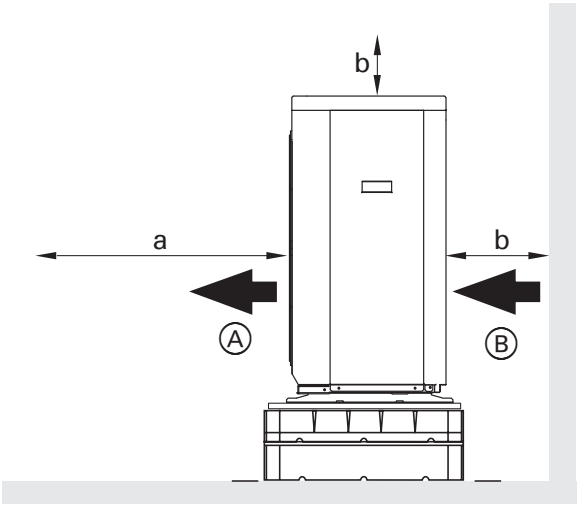

D3CMWAN0200281AK/D3CMWAN0340431AK Outdoor Unit

Legend

Ⓐ - Air outlet
Ⓑ - Air inlet

Dimensions in. (mm)

a	59 (1500)
b	20 (500)
c	39 (1000)
d	20 (500)

6241231 - 03

Recommended Minimum Service Clearances

D3CMWAN0510781AK Outdoor Unit

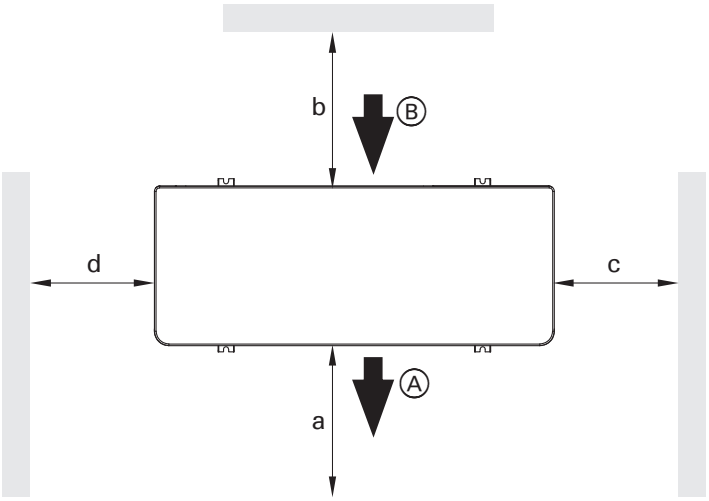

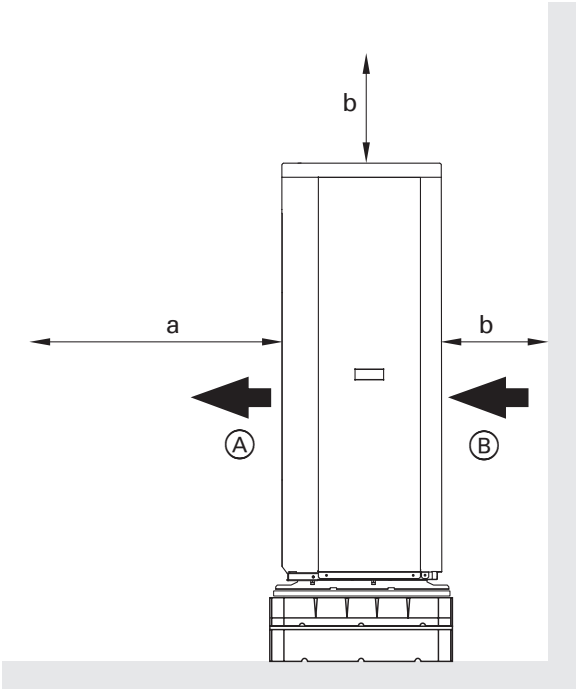

Legend

Ⓐ - Air outlet
Ⓑ - Air inlet

Dimensions in. (mm)

a	59 (1500)
b	20 (500)
c	39 (1000)
d	20 (500)

Outdoor Unit Sound Pressure

Outdoor Unit	Power level acoustic Lw [dB (A)]	Directivity Factor Q	Distance from the noise source ft (m)									
			3.3 (1)	6.6 (2)	9.8 (3)	13.1 (4)	16.4 (5)	19.7 (6)	26.2 (8)	32.8 (10)	39.4 (12)	49.2 (15)
			Sound pressure level [dB (A)]									
D3CMWAN-W0200281AK	54.8	2	41	46	42	40	38	36	34	32	30	28
		4	44	49	45	43	41	39	37	35	33	32
		8	47	52	48	46	44	42	40	38	36	35
D3CMWAN-W0340431AK	58.0	2	43	39	36	33	32	31	28	27	25	22
		4	46	42	39	36	35	34	31	30	28	25
		8	49	45	42	39	38	37	34	33	31	28
D3CMWAN-W0510781AK	60.8	2	44	40	38	35	33	32	30	28	27	23
		4	47	43	41	38	36	35	33	31	30	26
		8	50	46	44	41	39	38	36	34	33	29

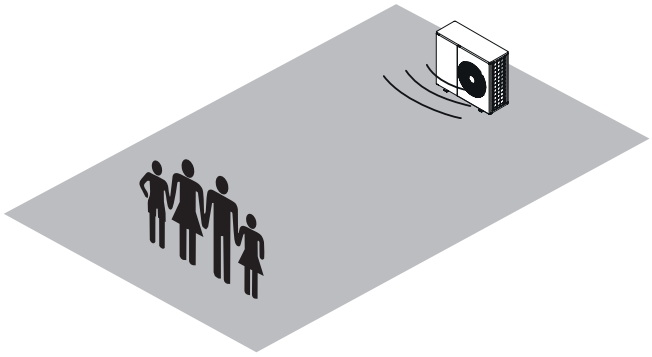

Q = 2: freestanding heat pump on the outside of the building.

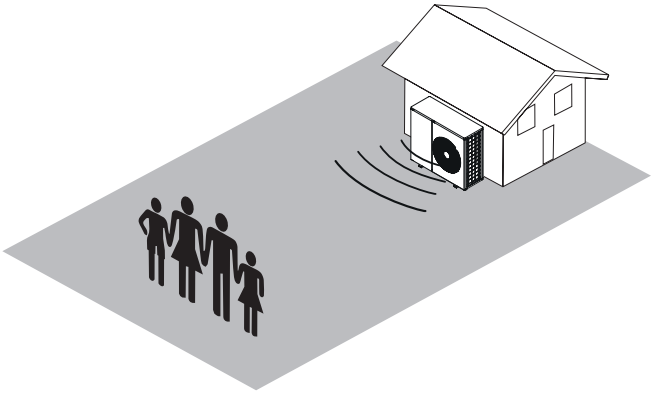

Q = 4: heat pump on the building's wall.

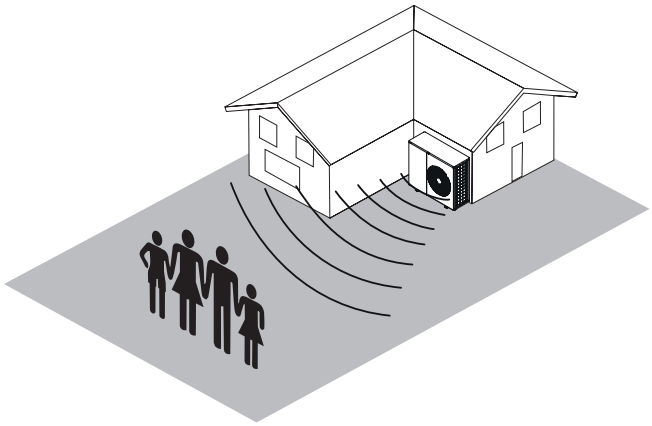

Q = 8: heat pump on the building's wall situated in the corner

Prior to Installation

Mounting:

- Mount the outdoor module in a free-standing position on a fixed supporting structure.
- In areas with snowfall, ensure the outdoor unit has been installed using a snow stand or wall mounting bracket that will elevate the outdoor unit above the anticipated snow load.
- The weight of the outdoor unit must be taken into account.

Setting:

- Do not install the exhaust side upwind.
- Carry out wall ducts and protective conduits for plumbing and electrical connection lines without using bent pipes and without changing the direction of the lines.

Impact of weather conditions:

- When installing in areas exposed to wind, pay attention to wind loads. When the outdoor unit is mounted on a flat roof, significant wind loads may arise depending on the wind load zone and the height of the building. Include the outdoor unit in the lightning protection system.
- When designing rain protection or canopy, pay attention to the heat input (heating mode) and heat output (cooling mode) of the unit.

Condensate:

- Ensure free drainage of the condensate away from the outdoor unit.

Damping of sound and vibration between the building and the outdoor unit:

- Make the hydronic connection to the outdoor unit using flexible connections.
- Electrical cables should be installed without tension.

⚠ IMPORTANT

Strong impacts may lead to a damage to the jacketing of the unit. Do not press against the outdoor unit jacketing.

⚠ IMPORTANT

Tilting the outdoor module sharply may lead to the oil from the compressor entering the refrigeration circuit and to a consequent failure during the start-up. Maximum tilt angle: 45° for approximately 4 min., otherwise 30°

Placement of the outdoor unit:

- Select a location with good air circulation so that cooled air can flow out and warm air can flow in.
- Do not install in corners, recesses or between walls. This may lead to a recirculation of exhaust air.

⚠ IMPORTANT

Restricting the free flow of air may lead to cooled air (or heated in the cooling mode) being drawn back in and lead to disruptions in the operation of the unit, a loss of efficiency and a consequent increase in electrical consumption.

- If set up in an area exposed to strong winds, prevent the wind from affecting the fan area. Strong winds may disrupt the air flow through the evaporator.
- Select the installation location so that the evaporator is not clogged by leaves, snow, etc.
- Consider sound propagation and reflection when selecting the mounting location.

Design guidelines

- Do not mount the device under windows or next to bedroom windows.
- Do not install the device in basement sumps or depressions in the ground.
- Maintain a min. 10 ft. (3 m) distance from basement sumps and windows.
- Maintain a distance from terraces, gutters or surfaces with a protective coating of min. 10 ft. (3 m). At outdoor temperatures below 50°F (10°C), cooled air blown out causes a risk of icing.
- Avoid “short circulating” of air streams with ventilation equipment. Maintain a min. 10 ft. (3 m) distance from the intake area of ventilation units.
- The installation location must be easily accessible, e.g. for service work

Mounting on a Concrete Pad

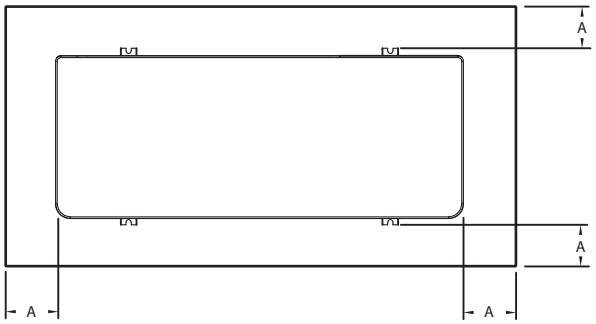

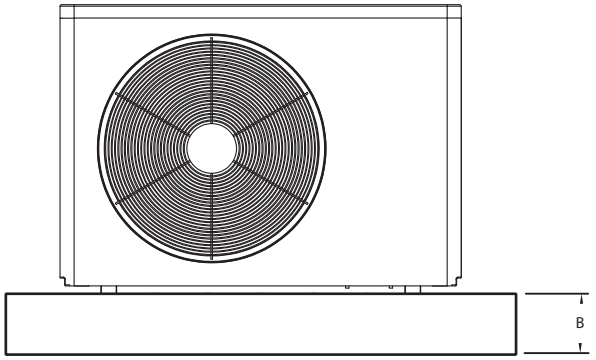

Dimensions in. (mm)

A	2 (50)
B	4 (100)

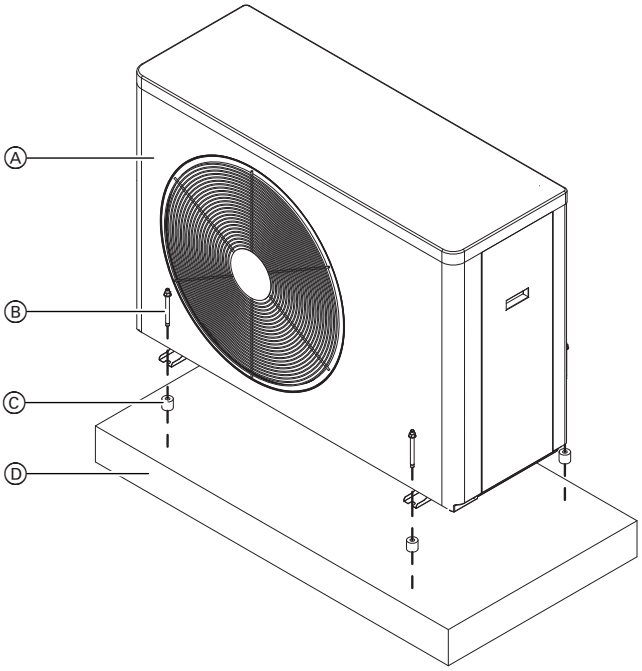

Concrete Pad Mounting

Legend

Ⓐ - Outdoor Unit
Ⓑ - Concrete anchor bolt
Ⓒ - Rubber vibration isolator
Ⓓ - Concrete pad

Mounting using a Mounting Curb

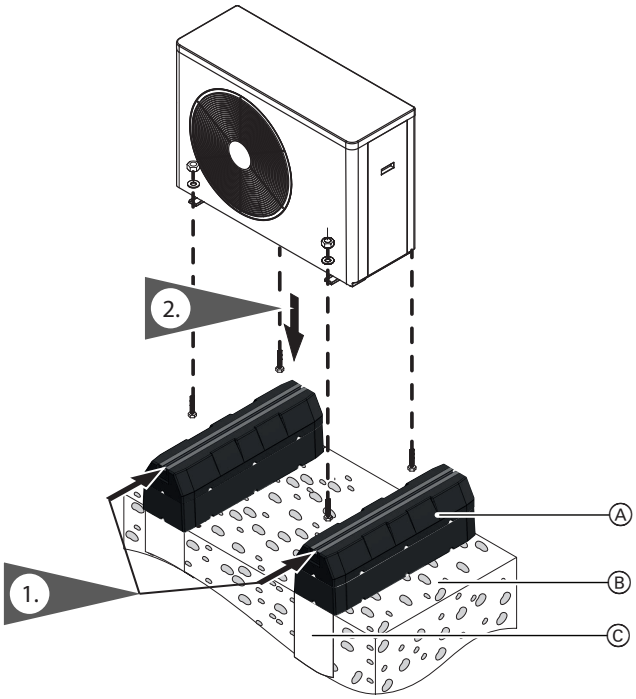

Curb Mounting

Legend

Ⓐ - Curb mounting bracket
Ⓑ - Gravel bed to facilitate condensate absorption
Ⓒ - Concrete foundation (if required)

Mounting on Stand

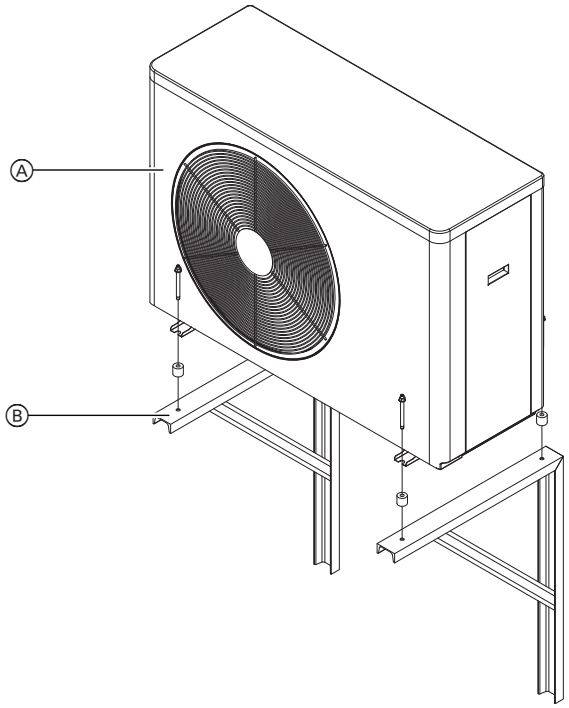

Stand Mounting

Legend
Ⓐ - Outdoor Unit
Ⓑ - Mounting Stand

⚠ IMPORTANT

Ensure that the stand or wall mount bracket is rated to support the weight of the outdoor unit. Follow the manufactures instructions for assembly and mounting requirements.

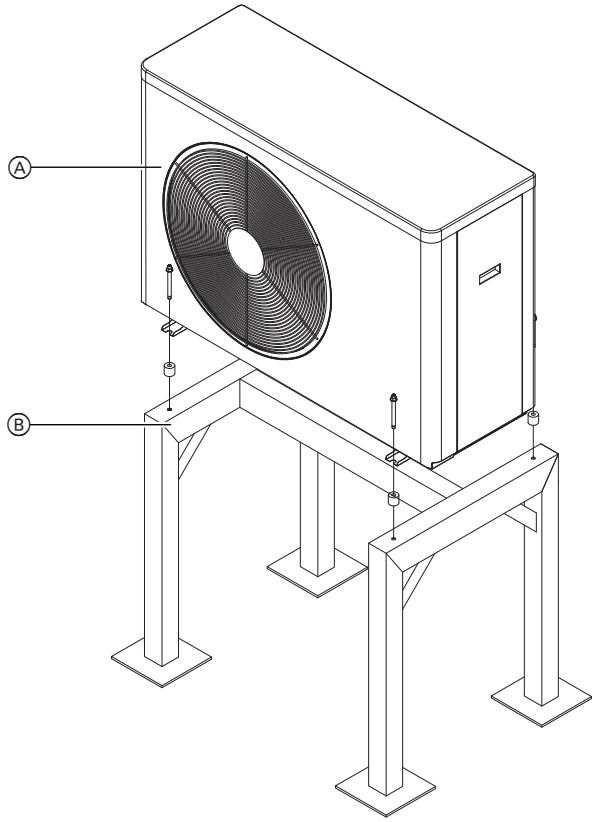

Safety Valve

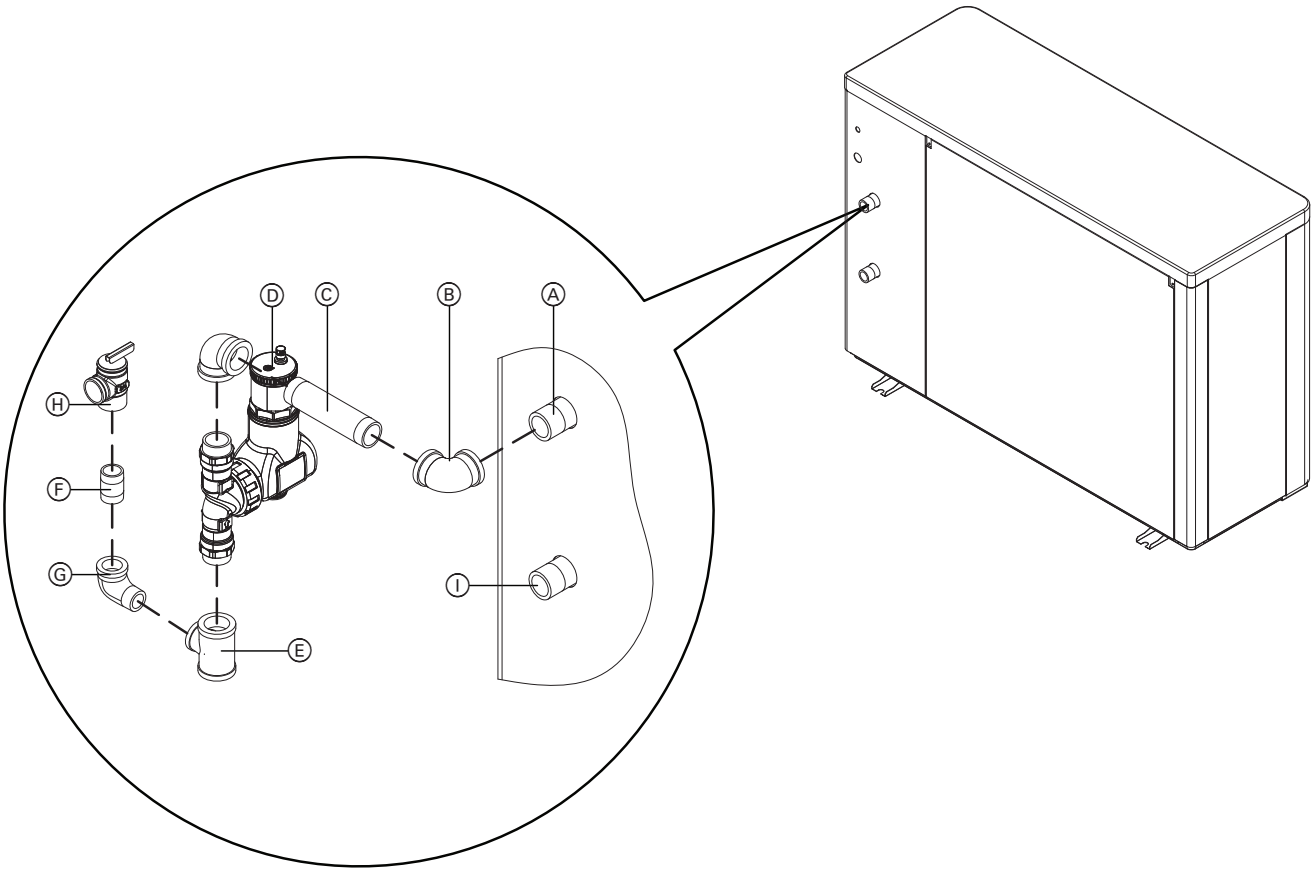

Legend

Ⓐ Supply from Outdoor Unit
Ⓑ 1 Inch Brass 90 Degree Elbow
Ⓒ 1 x 8 Inch Long Brass Nipple
Ⓓ Microbubble Air Separator
Ⓔ 1 x 1 x ¾ Inch Brass Reducing Tee
Ⓕ ¾ Inch Brass Close Nipple
Ⓖ ¾ Inch Brass 90 Degree Street Elbow
Ⓗ 30 PSI Pressure Relief Valve
Ⓘ Return to Outdoor Unit

⚠ WARNING

Do not install an isolation valve between the heat pump and pressure relief valve. The discharge pipe for the pressure relief valve must be oriented to prevent scalding of attendants. Pipe the pressure relief valve discharge pipe close to ground.

⚠ IMPORTANT

Install the (approved) factory supplied pressure relief valve. Removal of air from the system must occur via use of air vent(s) in the system supply. To ensure the heat pump can be purged of all air, ensure supply/return water lines do not contain restrictive piping where air could be trapped.

Installing the pressure relief valve:

1. Use the supplied fittings to install the pressure relief valve on the Supply from Outdoor Unit.

Minimum connection diameters:
Pressure relief valve..... ¾ in.
Discharge pipe ..... ¾ in.
Maximum operating pressure: 30 PSI (2 bar)
Minimum operating pressure: 8 PSI (0.5 bar)

Installing the discharge pipe:

1. Install discharge pipe on pressure relief valve in such a way that...
   - the end of the pipe is not threaded.
   - the pressure relief discharge pipe approximately 6 in. (150 mm) above the ground.

Ensure that...
   - there is no shutoff valve installed in the discharge pipe.
   - discharge pipe diameter is not reduced.

Piping Connections

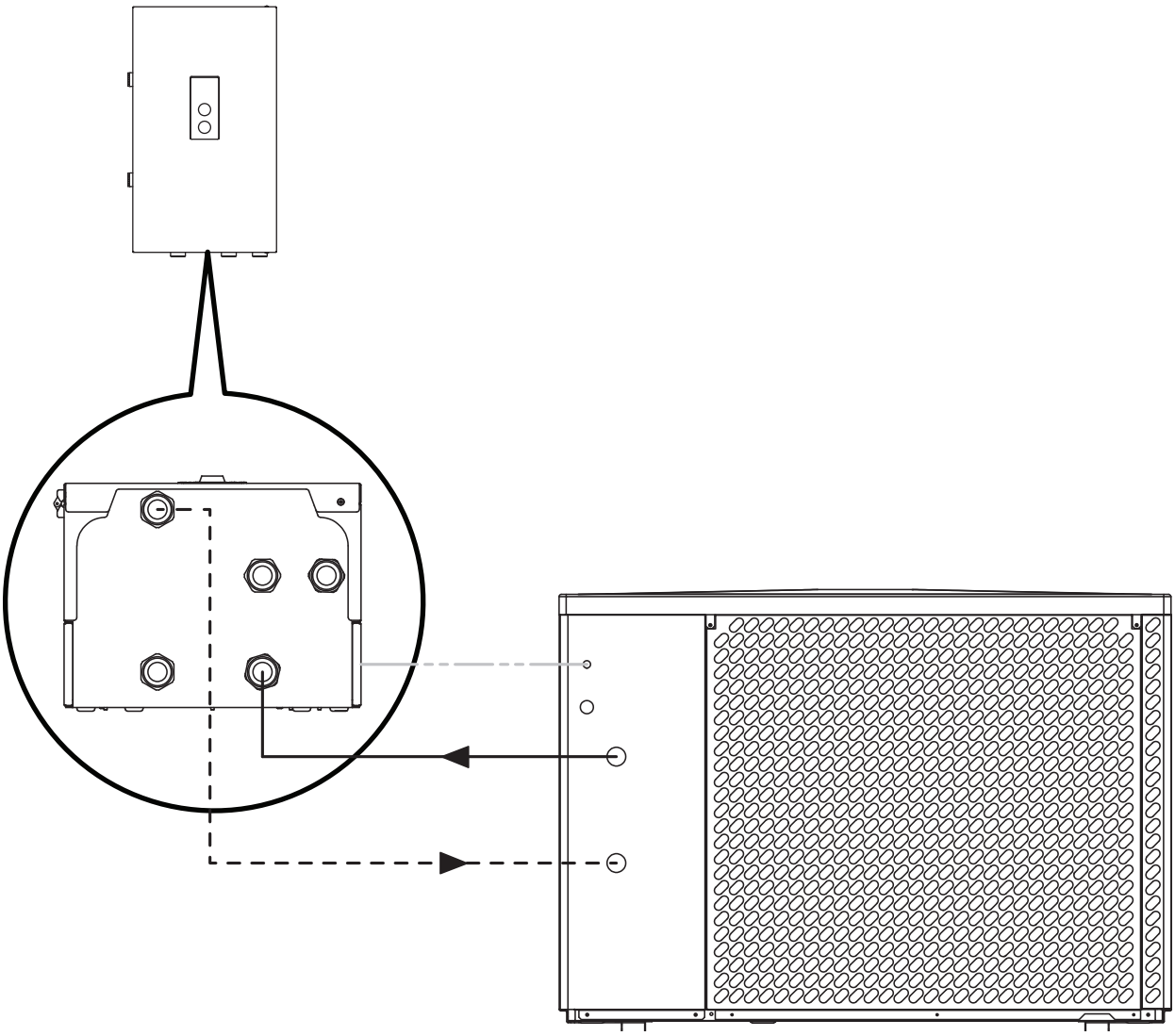

Connection between Indoor and Outdoor Unit

This is a simplified schematic of the connection points between the Indoor Unit and the Outdoor Unit, and does not represent all the required components.

Installation Examples

The heat pump can operate in a closed-loop hydronic system (the minimum heating medium pressure is 8 PSI [0.5 bar]). The hydronic installation must be carried out in compliance with the applicable standards. The pipes connecting the heat pump to the indoor unit must have an internal diameter to ensure an adequate flow of the heating medium (see technical data table).

Flexible piping must be used to connect the heat pump to the hydronic system to prevent the transmission of vibrations to the system. The heating medium pipes and connections must be thermally insulated. Do not switch off the unit when the outdoor air temperature is below freezing. This will protect the condenser of the outdoor unit from damage. If there is a risk of power failure, the heat pump heating circuit must be isolated from the hydronic module by means of an additional exchanger and the heat pump heating circuit must be filled with an antifreeze. A prerequisite for the warranty is an installation of a solids separator at the unit inlet.

The hydronic installation must be made in such a way that the indoor unit can be operated in the heating circuit without the outdoor unit (according to the following installation diagrams). This will ensure the operation of the heating system in the event of a failure of the outdoor unit.

Please note that in the following piping layout examples all pumps are field supplied.

⚠ WARNING

If a DHW storage tank other than the recommend tank is used, the installer must verify proper operation of the DHW tank temperature sensor with original manufacturer of the tank. It's strongly recommends the installation of a temperature tempering valve in the DHW supply line.

⚠ IMPORTANT

The examples on the following pages depict possible piping layouts of the heat pump. For heat pump and tank combinations, please install only feasible combinations. Please note that the following examples are simplified conceptual drawings only! Piping and necessary componentry must be field verified.

⚠ IMPORTANT

DHW supply and return piping between DHW connections on the indoor unit and the DHW tank connections, shall be a minimum of outlet sizes. This will ensure the residual head of the integral pump is fully utilized to overcome the resistance of the DHW heat exchanger coil and to provide sufficient water flow to the heat pump heat exchanger.
Accurate calculations for DHW tank coil pressure drop versus internal pump residual head to ensure sufficient water flow to the heat exchanger. Failure to heed the above instructions may inadequate DHW supply.

System Example 1

Air to water heat pump with:

- One direct-connected heating circuit
- One heating circuit with a mixing valve
- System Buffer Tank
- DHW Storage Tank

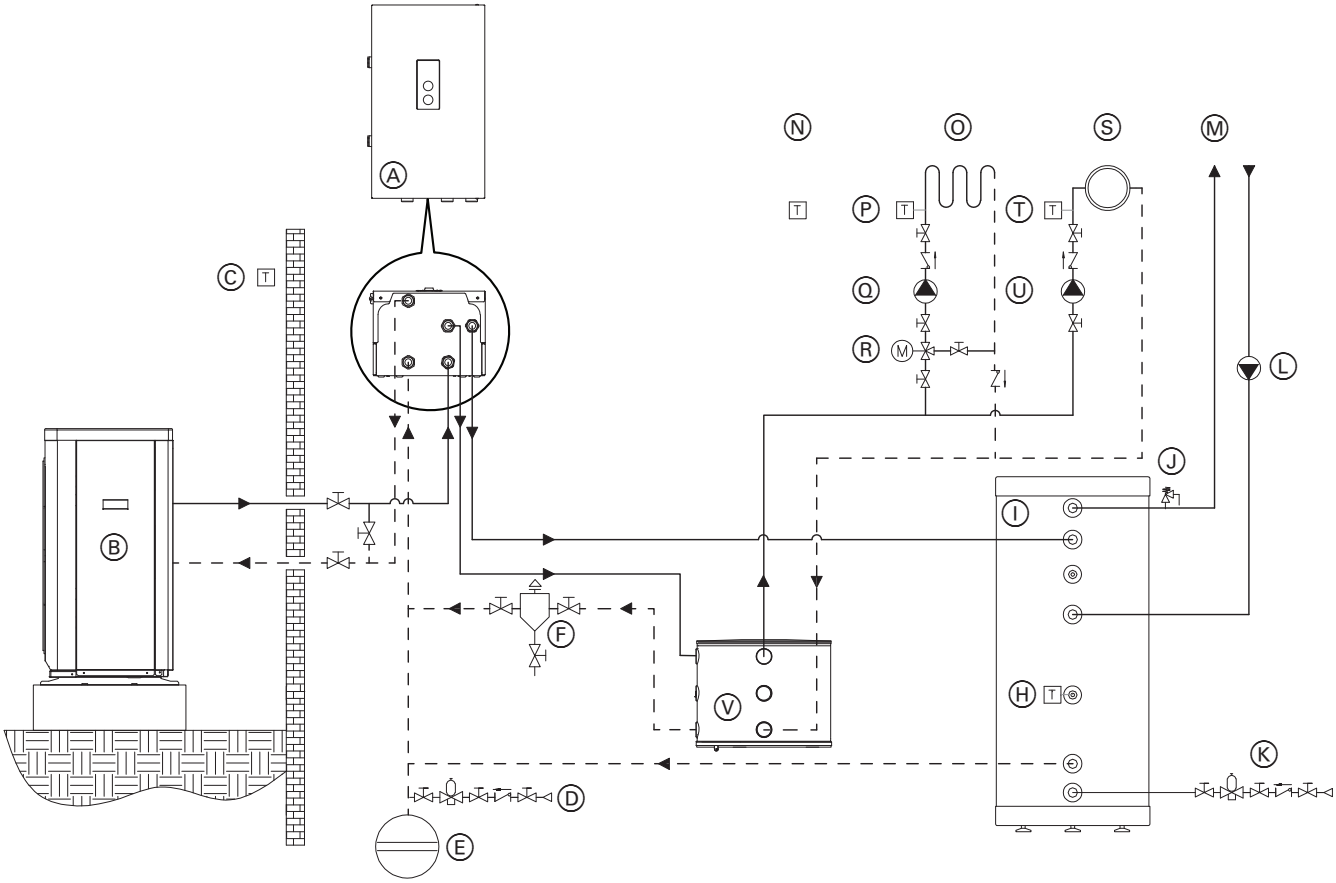

Legend:

Ⓐ Indoor Unit
Ⓑ Outdoor Unit
Ⓒ Outdoor Temperature Sensor
Ⓓ System Feed
Ⓔ Expansion Tank
Ⓕ Wye Strainer
Ⓖ Moisture Sensor
Ⓗ DHW Temperature Sensor
Ⓘ DHW Storage Tank
Ⓙ Temperature and Pressure Relief Valve
Ⓚ Potable Water Inlet
Ⓛ DHW Recirculation Pump
Ⓜ DHW Outlet
Ⓝ Room Temperature Sensor
Ⓞ Low Temperature Heating Circuit
Ⓟ Heating Circuit Temperature Sensor
Ⓠ Heating Circuit Pump
Ⓡ Heating Circuit Mixing Valve
Ⓢ High Temperature Heating Circuit
Ⓣ Heating Circuit Temperature Sensor
Ⓤ Heating Circuit Pump
Ⓥ System Buffer Tank

⚠ IMPORTANT

System separation is required of underfloor heating systems employing non-oxygen diffusion barrier tubing. All components on the secondary side of the heat exchanger must be made of corrosion-resistant materials.

6241231 - 03

System Example 2

Air to water heat pump with:

- One direct-connected heating circuit
- One heating circuit with a mixing valve
- One fan coil
- System Buffer Tank
- DHW Storage Tank

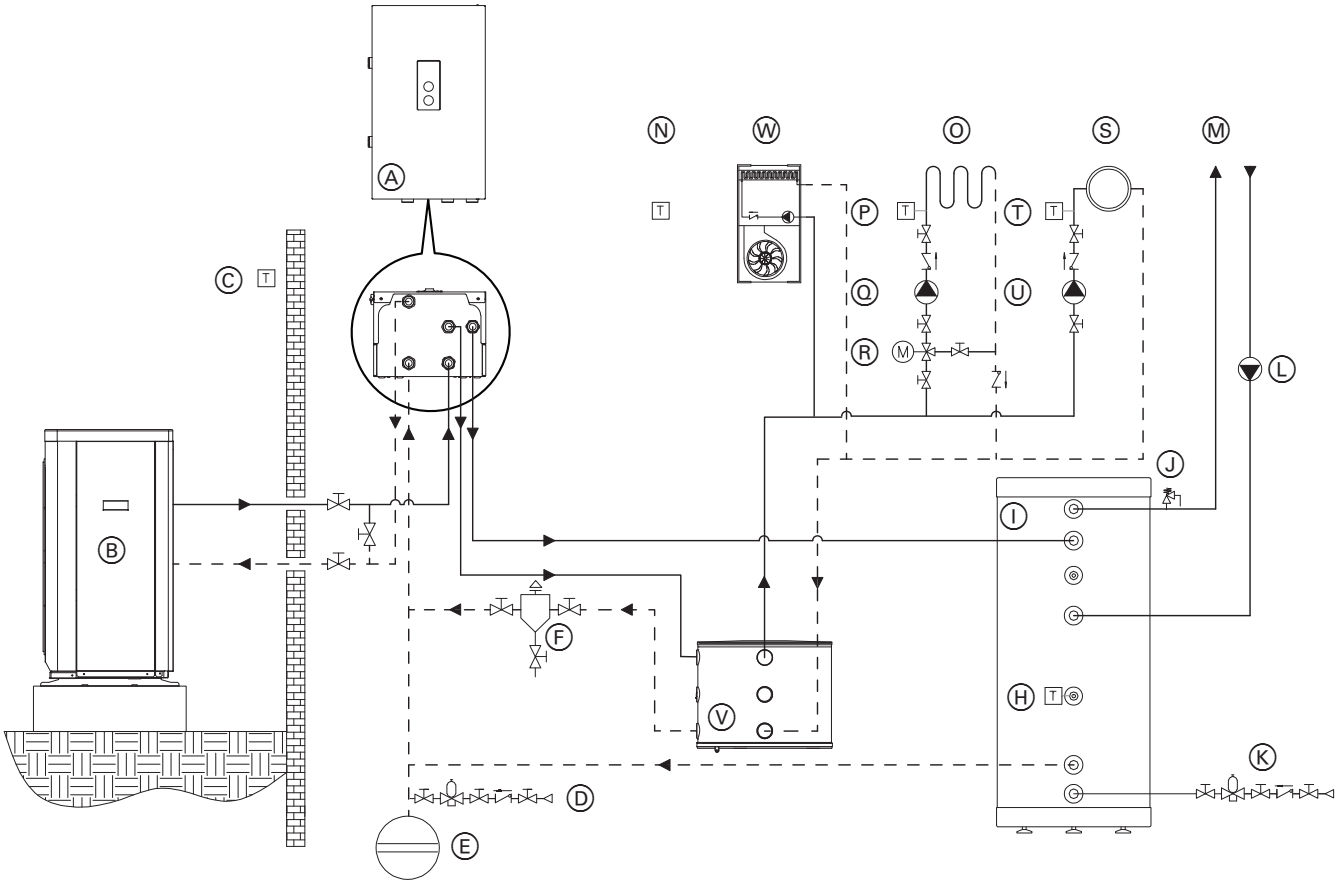

Legend:

Ⓐ Indoor Unit
Ⓑ Outdoor Unit
Ⓒ Outdoor Temperature Sensor
Ⓓ System Feed
Ⓔ Expansion Tank
Ⓕ Wye Strainer
Ⓖ Moisture Sensor
Ⓗ DHW Temperature Sensor
Ⓘ DHW Storage Tank
Ⓙ Temperature and Pressure Relief Valve
Ⓚ Potable Water Inlet
Ⓛ DHW Recirculation Pump
Ⓜ DHW Outlet
Ⓝ Room Temperature Sensor
Ⓞ Low Temperature Heating Circuit
Ⓟ Heating Circuit Temperature Sensor
Ⓠ Heating Circuit Pump
Ⓡ Heating Circuit Mixing Valve
Ⓢ High Temperature Heating Circuit
Ⓣ Heating Circuit Temperature Sensor
Ⓤ Heating Circuit Pump
Ⓥ System Buffer Tank
Ⓦ Fan Coil

⚠ IMPORTANT

System separation is required of underfloor heating systems employing non-oxygen diffusion barrier tubing. All components on the secondary side of the heat exchanger must be made of corrosion-resistant materials.

Design and Function

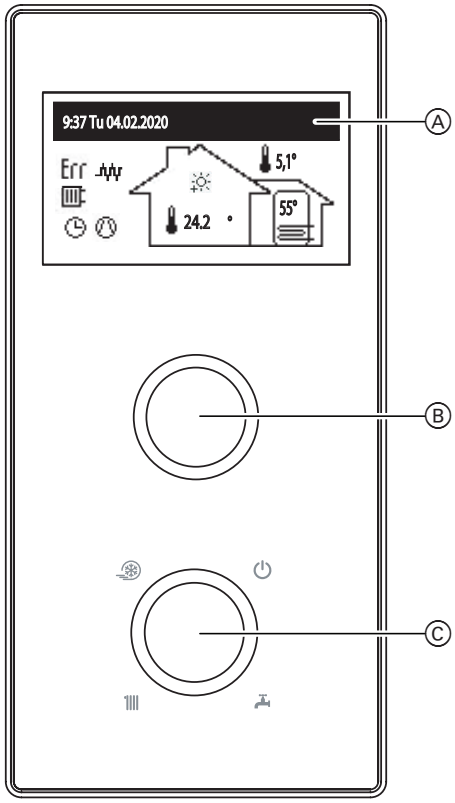

Legend
Ⓐ - Display
Ⓑ - Navigation Dial
Ⓒ - Mode Selector Dial

Use the mode selection dial Ⓒ to set one of the modes:

Winter (Space heating + DHW)	+
Summer (Space Cooling + DHW)	+
Standby (Frost Protection Active)	

Turning the navigation dial Ⓑ (left or right), with the winter or summer mode being active, switches the function screens on the display Ⓐ. To select the desired menu item press on the navigation dial Ⓑ.

- Home Screen: indicates the basic parameters of the heat pump (see the table for details),
- Preview of Parameters Menu: allows the input and output signals of the heat pump to be viewed.
- Settings Menu: allows the heat pump parameters to be adjusted to the user's preferences.
- Service/Configuration Menu: allows for heating system configuration to object's conditions (available to the installer and service contractors though an access code) and preview of input and output heat pump's signals and current parameters.
- Party/Holiday/Manual Menu: Allows the homeowner to override the active heating/cooling function without needing to adjust the time schedule

Pressing and holding the navigation dial when in any menu will return you to the home screen.

The individual functions are accessed by selecting the relevant menu screen and pressing the navigation dial. If an error or warning in the system occurs, the home screen will display either a Err or ⚠. By pressing on dial Ⓑ, a list of detected errors and warnings will be displayed.

Design and Function

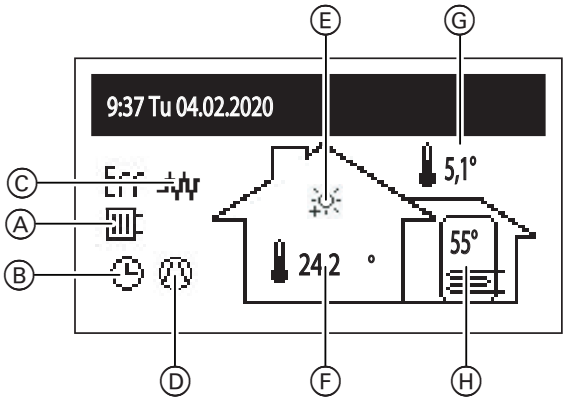

Legend

Ⓐ - Signalling of heat take-up
Ⓑ - Heating Program 'ON' Indication
Ⓒ - Heater 'ON' Indication
Ⓓ - Compressor Operation Indicator
Ⓔ - Set Room Temperature
Ⓕ - Actual Room Temperature
Ⓖ - Outdoor Temperature
Ⓗ - DHW Tank Temperature

Indication of the running program

	According to a pre-set daily/weekly schedule
	Disinfection of the storage tank
	Defrost cycle running
	PARTY - maintaining a comfortable temperature in the room and the cylinder
	HOLIDAYS - maintaining an economic or frost-free temperature in the room and the storage tank
	Implementation of the frost protection program
	MANUAL - maintaining the desired temperature in the room

Indication of realized Room Temperature

	Signalling of heat take-up > central heating
	Signalling of heat take-up > hot tap water
	Cooling operation indication

Other Symbols

Err	Error indication
	Warning indication
	Electric heat element is active
	Indicates that the compressor is active. Flashing symbol indicates bivalent mode.
	Back-up Heating On

Design and Function

Setting the Heating Curve Slope

The purpose of the heat pump controller is to maintain the temperature in the central heating system depending on the outdoor temperature. When the temperature outside the building is low, the need for heat is greater, whereas if the temperature outdoors is high, there is no need to maintain a high temperature in the system. The relationship between the outdoor temperature and the temperature of the central heating system can be represented in the form of a graph, the so-called heating curve. The figure shows a family of heating curves for a room temperature set point of 72°F (22°C). Depending on the characteristics of the building, the climate zone and the heating system type, a suitable curve needs to be selected.

Setting the Heating Curve Shift

If the curve needs to be shifted, change the [curve shift] parameter. The figure shows as an example curve no. 8 with a shift of -14°F and 50°F (-10°C and 10°C).

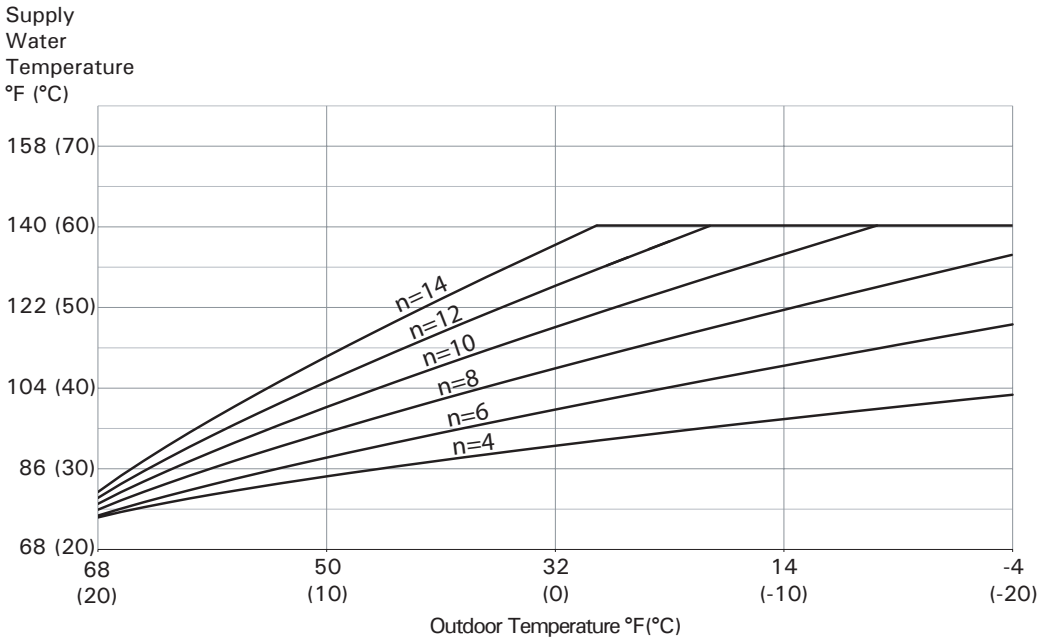

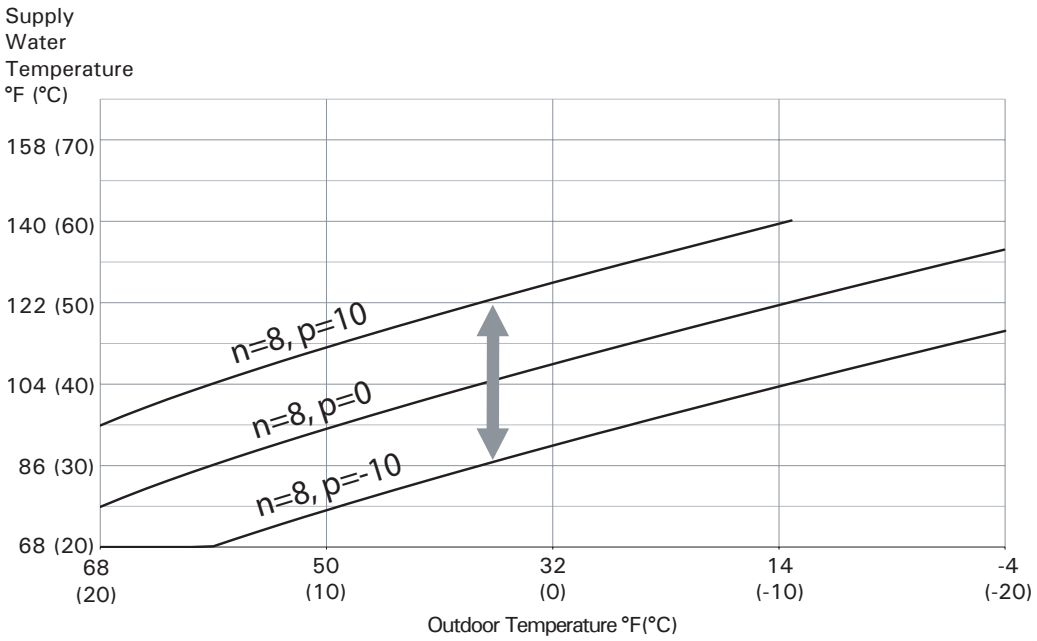

6241231 - 03

Accessories - Supplied

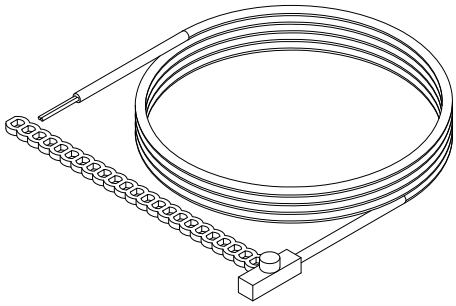

Heating Circuit 1 Strap-on Temperature Sensor

- Cable length approx. 16 ft. (4.8 m), ready to connect
- 10K ohms @ 77°F (25°C)
- at operation: 32 to 212°F (0 to 100°C) application in living areas and installation sites (normal ambient conditions)
- storage & shipping: -4 to 149°F (-20 to 65°C)

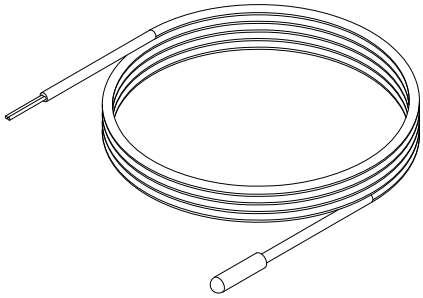

DHW Immersion Temperature Sensor

- Cable length approx. 16 ft. (4.8 m), ready to connect
- 10K ohms @ 77°F (25°C)
- at operation: 32 to 212°F (0 to 100°C) application in living areas and installation sites (normal ambient conditions)
- storage & shipping: -4 to 149°F (-20 to 65°C)

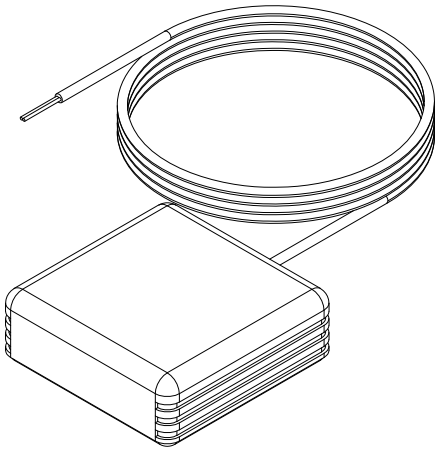

Room Temperature Sensor

- Cable length approx. 16 ft. (4.8 m), ready to connect
- 10K ohms @ 77°F (25°C)
- at operation: 32 to 212°F (0 to 100°C) application in living areas and installation sites (normal ambient conditions)
- storage & shipping: -4 to 149°F (-20 to 65°C)

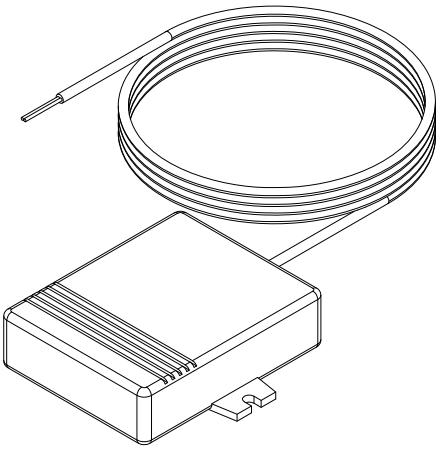

Outdoor Temperature Sensor

- Cable length approx. 16 ft. (4.8 m), ready to connect
- 10K ohms @ 77°F (25°C)
- at operation: -40 to 212°F (-40 to 100°C) application in living areas and installation sites (normal ambient conditions)
- storage & shipping: -4 to 149°F (-20 to 65°C)

Accessories - Optional

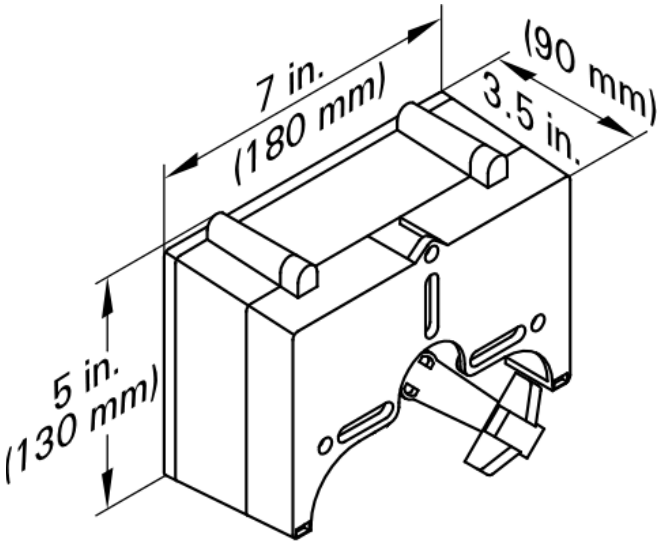

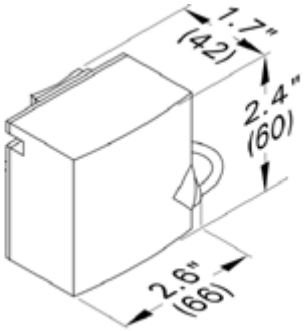

Mixing Valve Motor Kit

The mixing valve actuator is mounted directly on accessory ¾ to 2 in. mixing valve.

The mixing valve actuator is a motor-driven control unit.

The rotational direction is reversible.

The mixing valve actuator comes with a supply temperature sensor (strap-on sensor with 7 ft. (2.1 m) connecting cable).

Rated voltage:	120VAC
Rated frequency:	60 Hz
Power consumption:	5W

Actuator maximum ambient temperature

- at operation: 32 to 104°F (0 to 40°C) application in living areas and installation sites (normal ambient conditions)
- storage & shipping: -4 to 149°F (-20 to 65°C)

Sensor maximum ambient temperature

- at operation: 32 to 212°F (0 to 100°C) application in living areas and installation sites (normal ambient conditions)
- storage & shipping: -4 to 149°F (-20 to 65°C)

Indoor Unit Wiring Diagram

D0CMWAN020028/D0CMWAN034043 Indoor Unit

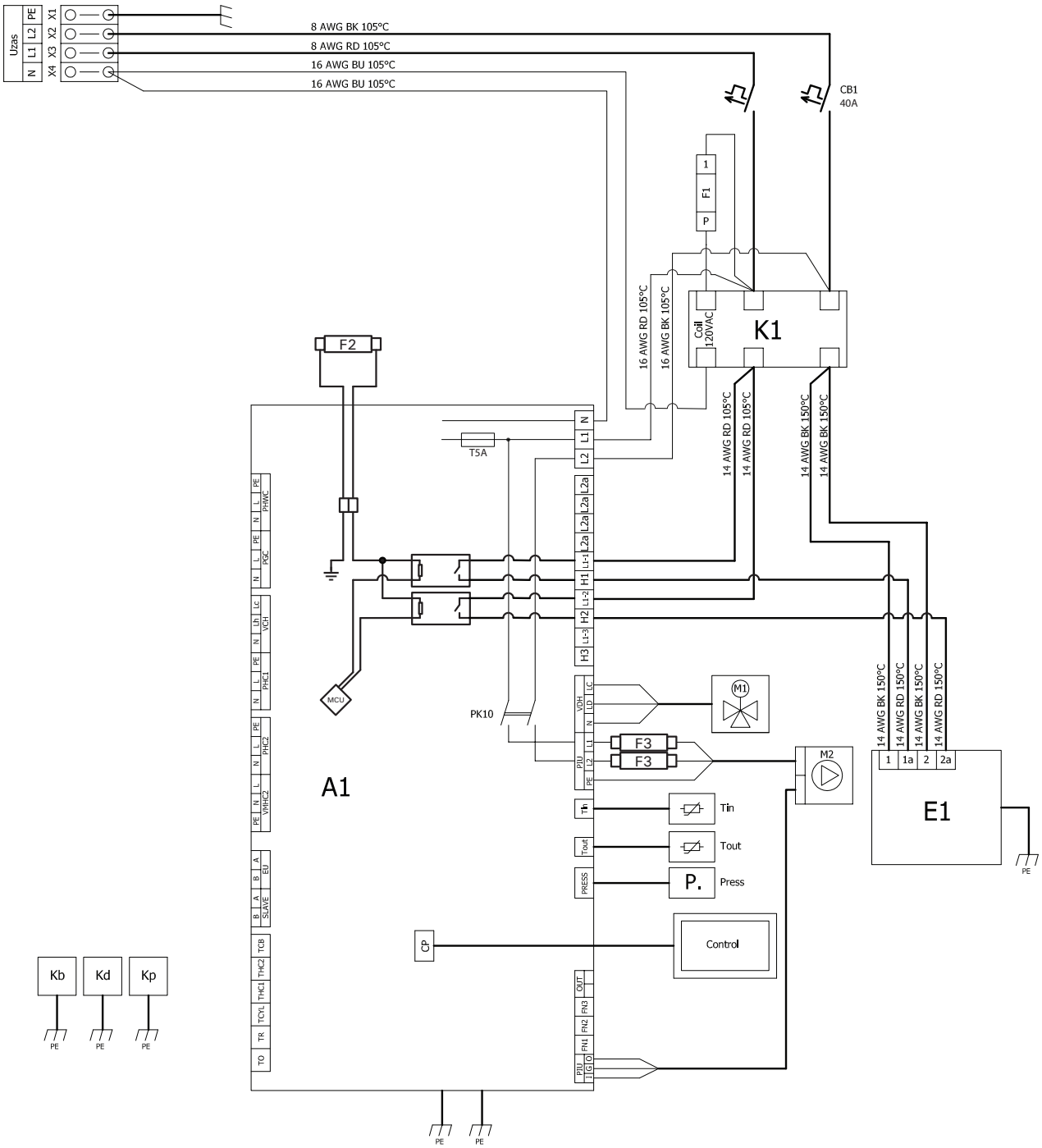

Legend

E1 - Heat Exchanger
A1 - Main Board
CP - Control Panel
F1 - Fixed High Limit
F2 - Automatic Reset High Limit
F3 - Internal Pump Fuse
CB1 - Circuit Breaker
K1 - Contactor
M1 - Internal Diverting Valve
M2 - Internal Circulation Pump
Tin - Return Temperature Sensor
Tout - Flow Sensor
P - Pressure Sensor

Indoor Unit Wiring Diagram

D0CMWAN051078 Indoor Unit

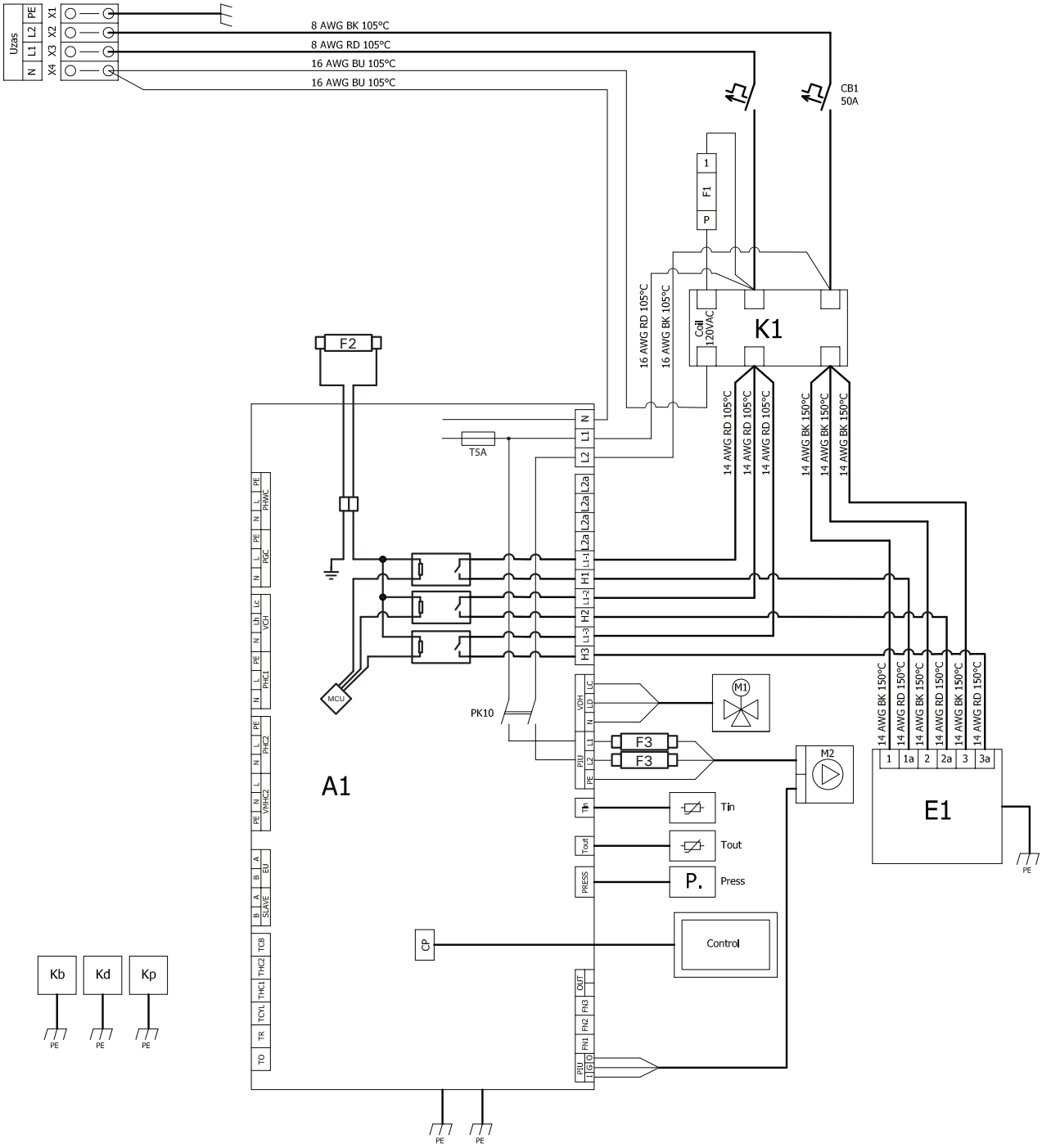

Legend

E1 - Heat Exchanger
A1 - Main Board
CP - Control Panel
F1 - Fixed High Limit
F2 - Automatic Reset High Limit
F3 - Internal Pump Fuse
CB1 - Circuit Breaker
K1 - Contactor
M1 - Internal Diverting Valve
M2 - Internal Circulation Pump
Tin - Return Temperature Sensor
Tout - Flow Sensor
P - Pressure Sensor

Outdoor Unit Wiring Diagram

D3CMWAN0200281AK Outdoor Unit

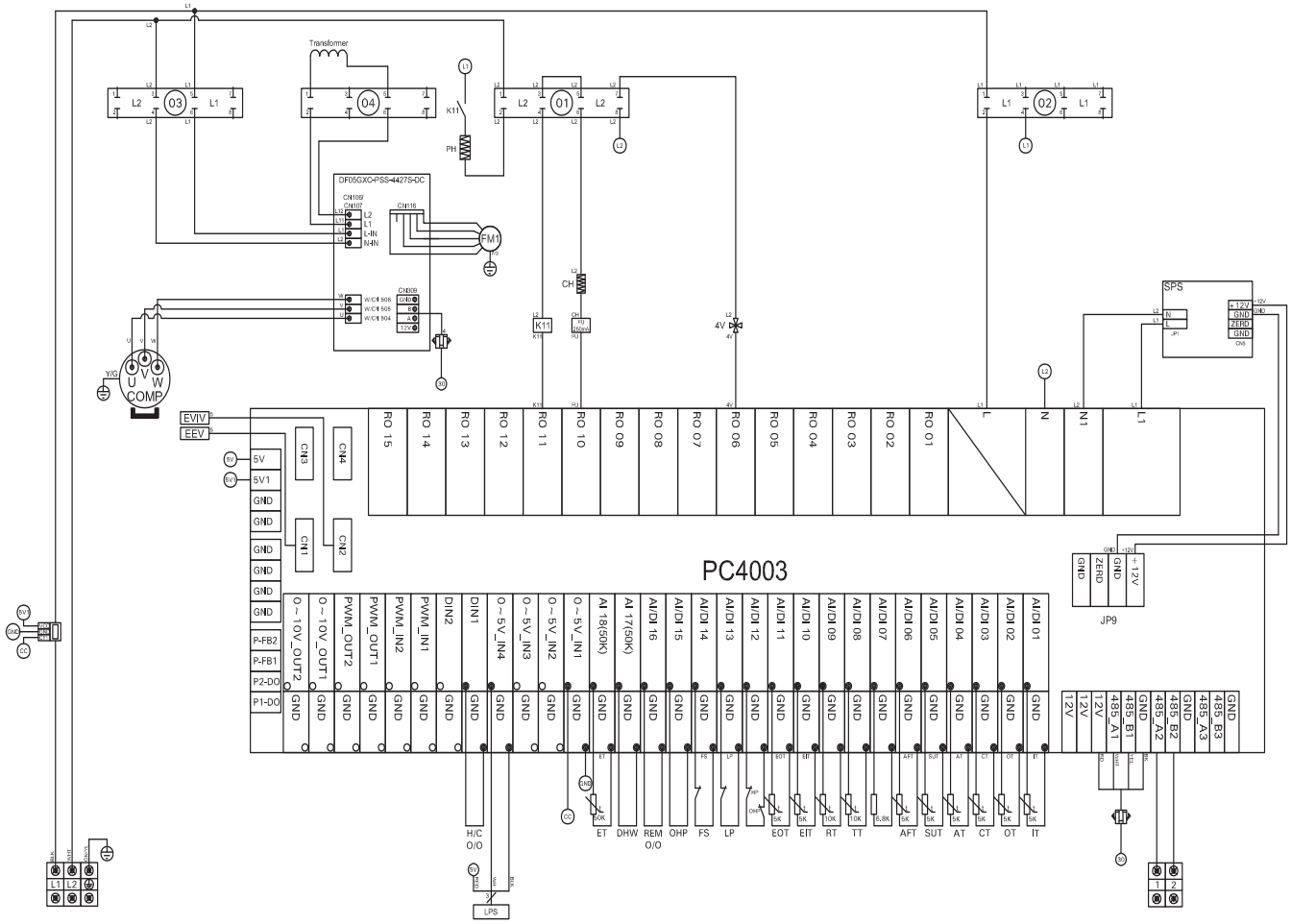

Designation	Description
AFT	Anti-freeze Temperature
AT	Ambient Temperature
COMP	Compressor
CT	Coil Temperature
CH	Cabinet Heater
EIT	EVI Inlet Gas Temperature
EOT	EVI Outlet Gas Temperature
EEV	Electronic Expansion Valve
EVIV	Electronic Expansion Valve for EVI
ET	Exhaust Temperature
FM	Fan Motor
FS	Flow Switch
HP	High Pressure Protection
IT	Inlet Water Temperature

Designation	Description
K4	Relay of Circulation Pump
K5	Relay of Hot Water Pump
K9	Relay of 3-Way Valve
K11	Relay of Pan Heater
LP	Low Pressure Protection
LPS	Low Pressure Sensor
OT	Outlet Water Temperature
OHP	Overheat Protection
PH	Pan Heater
RT	Room Temperature
SUT	Suction Temperature
SPS	Switching Power Supply
4V	4-Way Valve
TT	Tank Temperature

Outdoor Unit Wiring Diagram

D3CMWAN0340431AK Outdoor Unit

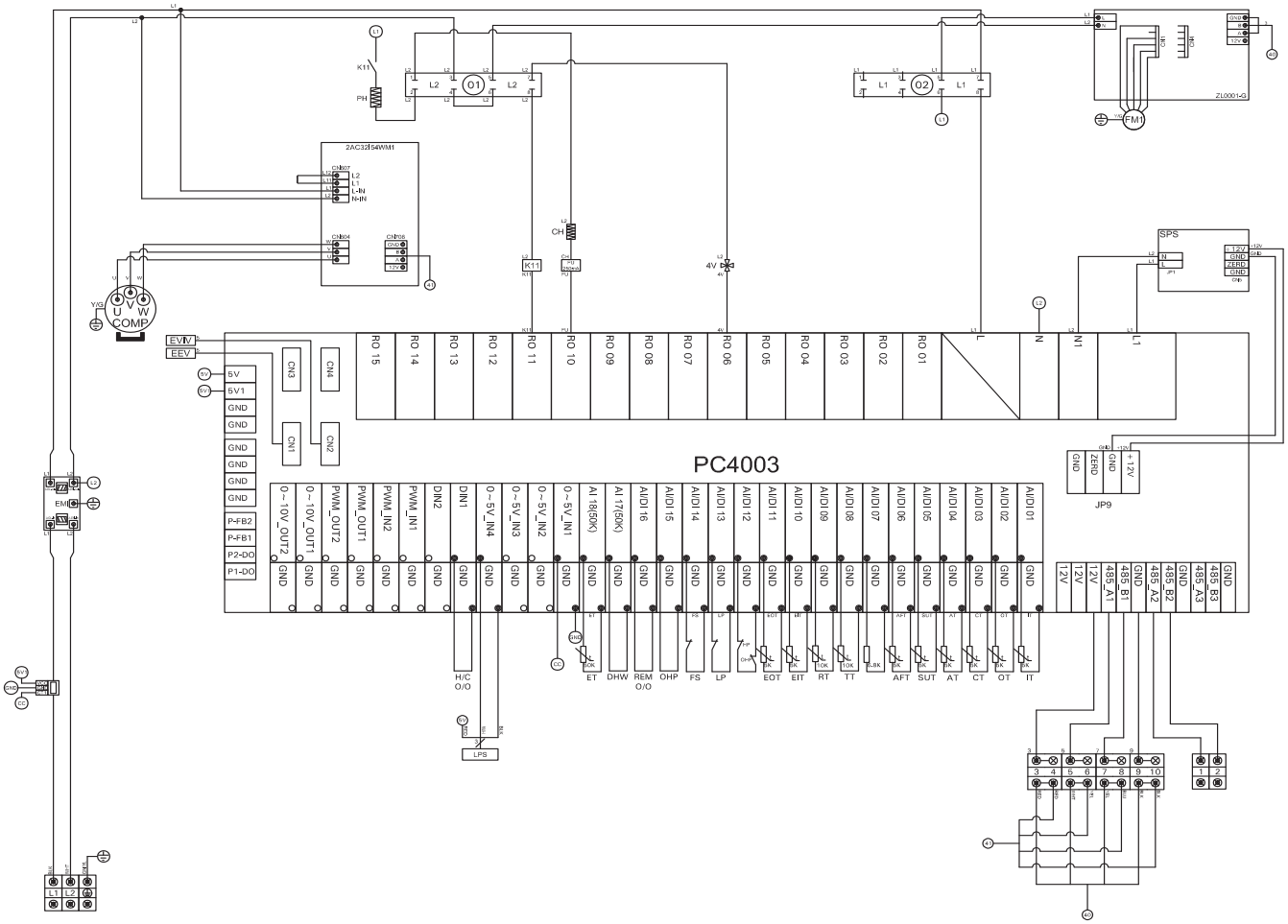

Designation	Description
AFT	Anti-freeze Temperature
AT	Ambient Temperature
COMP	Compressor
CT	Coil Temperature
CH	Cabinet Heater
EIT	EVI Inlet Gas Temperature
EOT	EVI Outlet Gas Temperature
EEV	Electronic Expansion Valve
EVIV	Electronic Expansion Valve for EVI
ET	Exhaust Temperature
FM	Fan Motor
FS	Flow Switch
HP	High Pressure Protection
IT	Inlet Water Temperature

Designation	Description
K4	Relay of Circulation Pump
K5	Relay of Hot Water Pump
K9	Relay of 3-Way Valve
K11	Relay of Pan Heater
LP	Low Pressure Protection
LPS	Low Pressure Sensor
OT	Outlet Water Temperature
OHP	Overheat Protection
PH	Pan Heater
RT	Room Temperature
SUT	Suction Temperature
SPS	Switching Power Supply
4V	4-Way Valve
TT	Tank Temperature

Outdoor Unit Wiring Diagram

D3CMWAN0510781AK Outdoor Unit

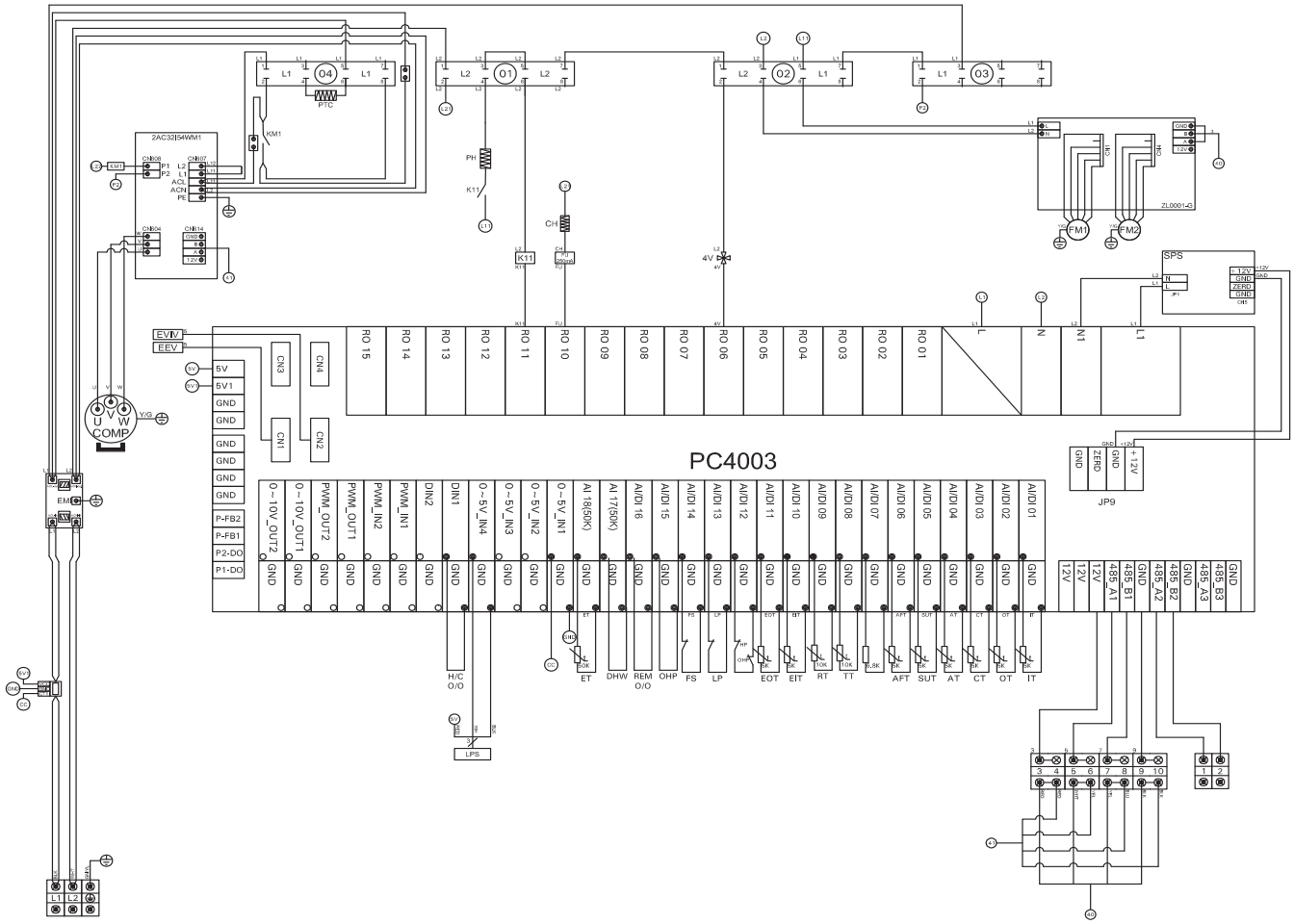

Designation	Description
AFT	Anti-freeze Temperature
AT	Ambient Temperature
COMP	Compressor
CT	Coil Temperature
CH	Cabinet Heater
EIT	EVI Inlet Gas Temperature
EOT	EVI Outlet Gas Temperature
EEV	Electronic Expansion Valve
EVIV	Electronic Expansion Valve for EVI
ET	Exhaust Temperature
FM	Fan Motor
FS	Flow Switch
HP	High Pressure Protection
IT	Inlet Water Temperature

Designation	Description
K4	Relay of Circulation Pump
K5	Relay of Hot Water Pump
K9	Relay of 3-Way Valve
K11	Relay of Pan Heater
LP	Low Pressure Protection
LPS	Low Pressure Sensor
OT	Outlet Water Temperature
OHP	Overheat Protection
PH	Pan Heater
RT	Room Temperature
SUT	Suction Temperature
SPS	Switching Power Supply
4V	4-Way Valve
TT	Tank Temperature

Filling the System

Water quality

Treatment for feed water should be considered in areas of known problems, such as where a high mineral content and hardness exist.

In areas where freezing might occur, an antifreeze may be added to the system water to protect the system. Please adhere to the specifications given by the antifreeze manufacturer.

Do not use automotive silicate based antifreeze. Please observe that an antifreeze/water mixture may require a backflow preventer within the automatic water feed and influence components such as diaphragm expansion tanks, radiation, etc. Maximum antifreeze content is 50% for the air to water heat pump. Refer to the manufacturers specifications when determining derate based on glycol concentration.

Do not use sulphur-containing feed water. Check pH-level after some operating time. It should be in the range from 8.2 to 9.5. If it is not, please take appropriate measures. Total permissible hardness of the fill and top-up water - 70 ppm.

Do not use antifreeze other than specifically made for hot water heating systems. System also may contain components which might be negatively affected by antifreeze. Check total system frequently when filled with antifreeze. Advise system operator/ultimate owner that system is filled with a glycol mix. The heating contractor must provide a SDS (Safety Data Sheet) for the antifreeze used to the system operator/ultimate owner.

Printed on environmentally friendly (recycled and recyclable) paper.

©2025 Carrier Corp. All rights reserved

Edition Date: 02/26

Catalog No: 6241231 - 03

A Proud Member of the Carrier Family

Replaces: NEW

Manufacturer reserves the right to change, at any time, specifications and designs without notice and without obligations.