Installation Sheet for the CAR-DMS-770-004 Gateway for Carrier AC Systems

Version 1.0.11

Owner's record

Find the serial number on the silver label on the right side of the gateway. For sales or technical assistance, we recommend writing it in the space below:

SN:

Safety Instructions

Follow these safety and installation instructions carefully. Improper work may lead to serious harm to your health and may seriously damage this Intesis gateway and/or any other installation equipment.

Only accredited technical personnel, following all these safety instructions and in accordance with the country's legislation for the installation of electric equipment, are authorized to install this Intesis gateway.

Install this Intesis gateway indoors, in a restricted access location, and sheltered from direct solar radiation, water, high relative humidity, or dust.

Mount this Intesis gateway, preferably, on a DIN rail inside a grounded metallic cabinet following the instructions below.

In the case of wall mounting, firmly fix this Intesis gateway on a non-vibrating surface following the instructions below.

Disconnect any wires from its power source before manipulating and connecting them to this Intesis gateway.

Use a SELV-rated NEC Class 2 or Limited Power Source (LPS) power supply.

Use a circuit breaker before the power supply. Rating: 250 V, 6 A.

Respect the expected polarity of power and communication cables when wiring this gateway.

Supply the correct voltage to power this Intesis gateway. The admitted range voltage is detailed in the technical specifications table.

Connect this Intesis gateway only to networks without routing to the outside plant. All communication ports are considered indoor only.

This Intesis gateway is designed for installation in an enclosure. When the device is mounted outside an enclosure, precautions should be taken to avoid electrostatic discharges to the unit in environments with static levels above 4 kV. When working in an enclosure (e.g., making adjustments, setting switches, etc.), typical anti-static precautions should be observed before touching the unit.

These safety instructions in other languages can be found here.

Configuration

Connect the gateway to a computer using the USB Mini-B type to USB Type A cable (included).

Configure the gateway using Intesis MAPS. To download the latest version of the configuration tool, click here.

For further information on the configuration, refer to the Intesis MAPS guide.

Mounting

Mount the gateway on a wall or over a DIN rail. We recommend the DIN rail mounting option, preferably inside a grounded metallic industrial cabinet.

Wall mounting

1. Press the top-side mobile clips in the rear panel until you hear a *click*.

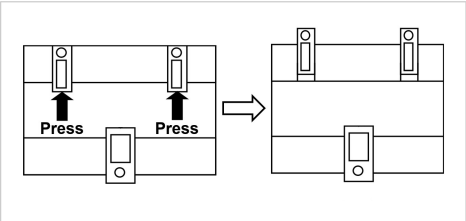

2. Use the clip holes to fix the gateway on the wall using screws.

Use M3 screws, 25 mm (1") length.

3. Make sure the gateway is firmly fixed.

DIN rail mounting

Keep the clips in their original position.

1. Fit the gateway's top-side clips in the upper edge of the DIN rail.
2. Press the low side of the gateway gently to lock it in the DIN rail.
3. Make sure the gateway is firmly fixed.

For some DIN rails, to complete step 2, you may need a small screwdriver or similar to pull the bottom clip down.

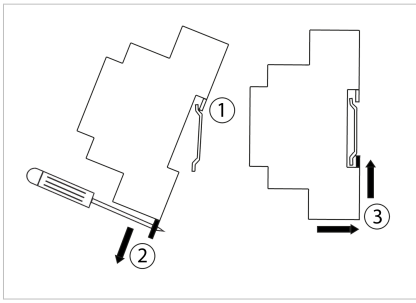

Connections

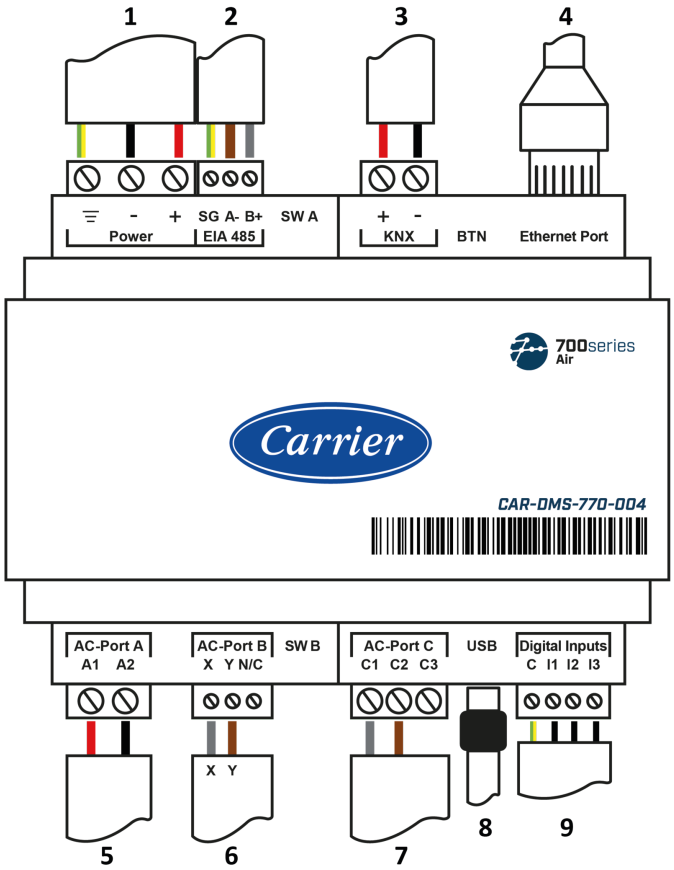

1. **Power Supply** (12-36 VDC)
2. **Port EIA-485**
3. **Port KNX**
4. **Ethernet**
5. **Not used**
6. **Carrier** (Ductless: X/Y)
7. **Not used**
8. **Console**
9. **Binary inputs (dry contact)** optional

Power supply: Use a SELV-rated NEC class 2 or Limited Power Source (LPS) power supply. Connect the gateway's ground terminal (⏚) to the installation grounding.

Power rating:

- **DC**: 12 .. 36 VDC ±10%, Max: 250 mA
- **Recommended voltage:** 24 VDC, Max: 127 mA

© HMS Industrial Networks SLU | www.hms-networks.com

Communication ports:

PORT	USAGE	WIRING			
EIA-485 [1]	BACnet MS/TP and Modbus RTU	**SG**: Signal ground	**A-**	**B+**	
KNX	KNX bus	**+**		**-**	
Ethernet	**As a TCP/IP port**: BACnet/IP, Modbus TCP, and Home Automation **As a console port**: Connection to a PC for configuration purposes	Ethernet cable (CAT5 or higher) When using the building LAN, contact the network administrator and make sure traffic is allowed. When starting up the gateway for the first time, DHCP will be enabled for 30 seconds. After that time, the default IP 192.168.100.246 will be set.			
AC-Port A	*Not used*				
AC-Port B [2] Observe polarity	Carrier Ductless bus	**X**:X	**Y**:Y	**N/C**: *Not used*	
AC Port-C	*Not used*				
USB	Connection to a PC for configuration purposes	USB Mini-B type			
Digital Inputs	Dry contact for input devices	**C**: Common	**I1**: Input 1	**I2**: Input 2	**I3**: Input 3

[1] **Standard EIA-485 bus requirements**: maximum distance of 1200 meters (0.75 miles); up to 32 devices connected; a 120 Ω resistor at each end of the bus is needed (configure the bus biasing and termination resistor for Port EIA-485 with the DIP switch SWA. See the Technical Specifications table). To know more, refer to the document Polarity Issues in RS485 Networks.

[2] **Bus incompatibility warning**: The gateway cannot be connected when a central controller module (CCM) is present in the bus.

Scan here for further configuration details

Dimensions

NET DIMENSIONS (HxWxD)
Millimeters: 90 x 106 x 58 mm
Inches: 3.5 x 4.2 x 2.3"

Leave enough clear space to wire the gateway easily and for the subsequent manipulation of elements such as connectors, DIP switches, etc.

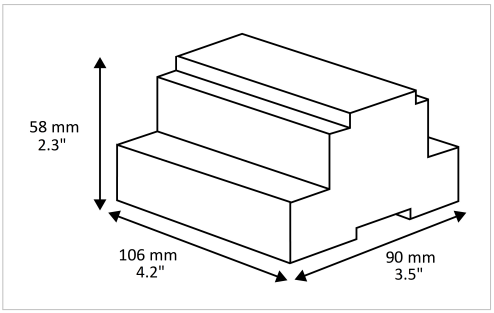

Disposal and Recycling

This product contains electronic components and must be properly disposed of according to local laws and regulations. For further information, refer to: https://www.hms-networks.com/sustainability

For further information on the installation, connection, and configuration of this gateway, refer to the User manual.

Connection Overview

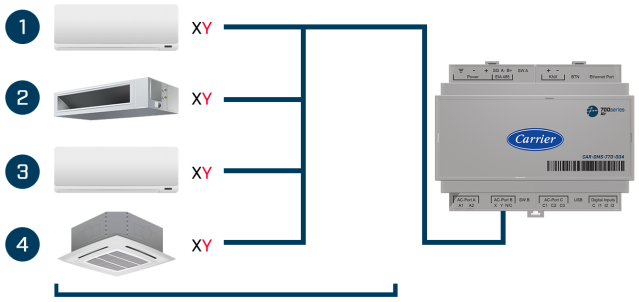

Connection Overview
Daisy Chain up to 4 Indoor Units to the XY Bus

Technical Specifications

Housing	Plastic, type PC (UL 94 V-0). Color: Light Grey. RAL 7035 Net dimensions (HxWxD): Millimeters: 90 x 106 x 58 mm / Inches: 3.5 x 4.2 x 2.3"	
Mounting	Wall: M3 25 mm (1") length screws. Secure mounting: below 2 meters (6 feet) DIN rail (recommended mounting) EN60715 TH35	
Wires (for power supply and low-voltage signals)	Per terminal: solid wires or stranded wires (twisted or with ferrule) Wire cross-section/gauge: One core: 0.2 .. 2.5 mm^2 (24 .. 14 AWG) Two cores: 0.2 .. 1.5 mm^2 (24 .. 16 AWG) Three cores: Not permitted For distances longer than 3.05 meters (10 feet), use class 2 cables	
Power	1 x Green pluggable terminal block (3 poles) 12 .. 36 VDC +/-10%, Max.: 250 mA Recommended: 24 VDC, Max.: 127 mA	
Ethernet	1 x Ethernet 10/100 Mbps RJ45	
Port EIA 485	1 x Green pluggable terminal block (3 poles) SGND (Reference ground or shield)	
Port KNX	1 x Orange pluggable terminal block (2 poles): +, -	
AC Ports	AC-Port A (serial, 2 poles): Not used AC-Port B (serial, 3 poles): Carrier bus connection (XY) AC-Port C: (serial, 3 poles): Not used	
LEDs	2 x Run (Power/Error) 2 x Port EIA-485 TX/RX 2 x Port KNX TX/TR 1 x Button indicator	2 x Ethernet Link/Speed 2 x AC-Port A TX/RX 2 x AC-Port B TX/RX 2 x AC-Port C TX/RX
Binary inputs	1 x Green pluggable terminal block (4 poles) I1, I2, I3, and Common	
Console port	USB Mini-B type 2.0 compliant	
DIP switches	2 x DIP switch blocks for EIA-485 serial port configuration **SW A** Position 1: On: 120 Ω termination active Off: 120 Ω termination inactive (default) Position 2 and 3: On: Polarization active Off: Polarization inactive (default)	**SW B** Position 1: On: 120 Ω termination active Off: 120 Ω termination inactive (default) Position 2 and 3: On: Polarization active Off: Polarization inactive (default)
Push button	1 x Push button Factory reset I-Am message (for BACnet only) Normal mode/programming mode switch (for KNX only)	
Operational temperature	Celsius: 0 .. 60°C Fahrenheit: 32 .. 140°F	
Operational humidity	5 to 95%. No condensation	
Isolation between comm. ports	1000 VDC	
Protection	IP20 (IEC60529)	

© HMS Industrial Networks SLU | www.hms-networks.com