D5CMTAH
Outdoor Unit Multi Zone Ductless System
Sizes 18K - 48K

Installation Instructions

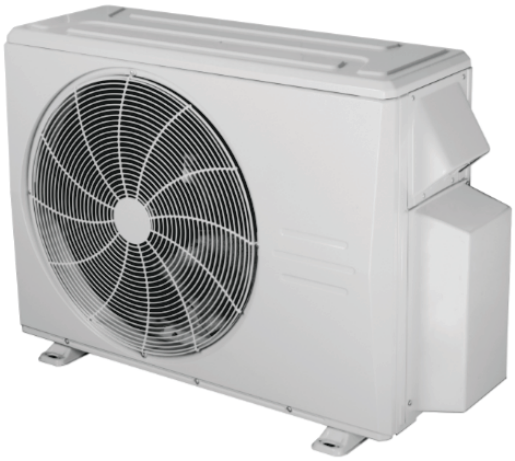

Fig. 1 —Sizes 18K-36K

Size 48K

NOTES: Read the entire instruction manual before starting the installation.

Images are for illustration purposes only. Actual models may differ slightly.

TABLE OF CONTENTS

	Page
SAFETY CONSIDERATIONS	2
PERFORMANCE	10
ACCESSORIES	11
DIMENSIONS	12
CLEARANCES	16
SPECIFICATIONS	17
INSTALLATION	20
REFRIGERANT PIPING	25
WIRING	29
AIR EVACUATION	33
SAFETY AND LEAKAGE CHECKS	35
FUNCTION OF AUTOMATIC WIRING/PIPING CORRECTION	35
TEST RUN	36
PACKING AND UNPACKING THE UNIT	37
ERROR CODES	38
DUCTLESS START-UP CHECKLIST - Multi Zone	39

Specifications subject to change without notice.

SAFETY CONSIDERATIONS

Installing, starting up, and servicing air-conditioning equipment can be hazardous due to system pressures, electrical components, and equipment location (roofs, elevated structures, etc.).

Only trained, qualified installers and service mechanics should install, start-up, and service this equipment.

Untrained personnel can perform basic maintenance functions such as coil cleaning. All other operations should be performed by trained service personnel.

When working on the equipment, observe precautions in the literature and on tags, stickers, and labels attached to the equipment.

Follow all safety codes. Wear safety glasses and work gloves. Keep a quenching cloth and fire extinguisher nearby when brazing. Use care in handling, rigging, and setting bulky equipment.

Read these instructions thoroughly and follow all warnings or cautions included in literature and attached to the unit. Consult local building codes and National Electrical Code (NEC) for special requirements. Recognize safety information.

This is the safety-alert symbol ⚠.

When you see this symbol on the unit and in instructions or manuals, be alert to the potential for personal injury. Understand these signal words: **DANGER**, **WARNING**, and **CAUTION**. These words are used with the safety-alert symbol.

DANGER identifies the most serious hazards which will result in severe personal injury or death.

WARNING signifies hazards which could result in personal injury or death.

CAUTION is used to identify unsafe practices which may result in minor personal injury or product and property damage.

NOTE is used to highlight suggestions which will result in enhanced installation, reliability, or operation.

⚠ WARNING

ELECTRICAL SHOCK HAZARD

Failure to follow this warning could result in personal injury or death.

Before installing, modifying, or servicing system, the main electrical disconnect switch must be in the OFF position. There may be more than 1 disconnect switch. Lock out and tag switch with a suitable warning label.

⚠ WARNING

EXPLOSION HAZARD

Failure to follow this warning could result in personal injury or death. Before installing, modifying, or servicing system, the main electrical disconnect switch must be in the OFF position. There may be more than 1 disconnect switch. Lock out and tag switch with a suitable warning label.

⚠ CAUTION

EQUIPMENT DAMAGE HAZARD

Failure to follow this caution may result in equipment damage or improper operation.

Do not bury more than 36 in. (914 mm) of refrigerant pipe in the ground. If any section of pipe is buried, there must be a 6 in. (152 mm) vertical rise to the valve connections on the outdoor units. If more than the recommended length is buried, refrigerant may migrate to the cooler buried section during extended periods of system shutdown. This causes refrigerant slugging and could possibly damage the compressor at start-up.

⚠ WARNING

This appliance is not intended for use by persons (including children) with reduced physical, sensory or mental capabilities, or lack of experience and knowledge, unless they have been given supervision or instruction concerning use of the appliance by a person responsible for their safety. Children should be supervised to ensure that they do not play with the appliance.

⚠ WARNING

Only use the specified wire. If the wire is damaged, it must be replaced by the manufacturer, its service agent or similarly qualified persons in order to avoid a hazard. The product must be properly grounded at the time of installation, or electric shock may occur.

For all electrical work, follow all local and national wiring standards, regulations, and the Installation Manual. Connect the cables tightly, and clamp them securely to prevent external forces from damaging the terminal. Improper electrical connections can overheat and cause fire, and may also cause shock. All electrical connections must be made according to the Electrical Connection Diagram located on the panels of the indoor and outdoor units.

All wiring must be properly arranged to ensure that the control board cover can close properly. If the control board cover is not closed properly, it can lead to corrosion and cause the connection points on the terminal to heat up, catch fire, or cause electrical shock.

Disconnection must be incorporated in the fixed wiring in accordance with NEC, CSA, and Local Codes. Do not share the electrical outlet with other appliances. Improper or insufficient power supply can cause fire or electric shock.

If connecting power to fixed wiring, an all-pole disconnection device which has at least 3mm clearances in all poles, and have a leakage current that may exceed 10mA, the residual current device (RCD) having a rated residual operating current not exceeding 30mA, and disconnection must be incorporated in the fixed wiring in accordance with NEC, CSA, and Local Codes.

Manufacturer reserves the right to change, at any time, specifications and designs without notice and without obligations.

⚠ WARNING

Turn of the unit and disconnect the power before performing any installation or repairing. Failure to do so can cause electric shock.

Installation must be performed by an authorized dealer or specialist. Defective installation can cause water leakage, electrical shock, or fire.

Installation must be performed according to the installation instructions. Improper installation can cause water leakage, electrical shock, or fire.

Contact an authorized service technician for repair or maintenance of this unit. This appliance shall be installed in accordance with national wiring regulations. Only use the included accessories, parts, and specified parts for installation. Using non-standard parts can cause water leakage, electrical shock, fire, and can cause the unit to fail.

Install the unit in a firm location that can support the unit's weight. If the chosen location cannot support the unit's weight, or the installation is not done properly, the unit may drop and cause serious injury and damage.

Install drainage piping according to the instructions in this manual. Improper drainage may cause water damage to your home and property.

For units that have an auxiliary electric heater, do not install the unit within 3 feet (1 meter) of any combustible materials.

If combustible gas accumulates around the unit, it may cause fire.

Do not turn on the power until all work has been completed.

When moving or relocating the unit, consult experienced service technicians for disconnection and re-installation of the unit.

How to install the appliance to its support, please read the information for details in "indoor unit installation" and "outdoor unit installation" sections.

NOTE: The air conditioner's circuit board (PCB) is designed with a fuse to provide overcurrent protection. The specifications of the fuse are printed on the circuit board, for example: T3.15AL/250VAC, T5AL/250VAC, T3.15A/ 250VAC, T5A/ 250VAC, T20A/250VAC, T30A/250VAC,etc.

NOTE: Only the blast-proof ceramic fuse can be used.

⚠ WARNING

FOR FLAMMABLE REFRIGERANTS

Do not use means to accelerate the defrosting process or to clean, other than those recommended by the manufacturer.

The appliance shall be stored in a room without continuously operating ignition sources (for example: open flames, an operating gas appliance or an operating electric heater).

Do not pierce or burn. Be aware that refrigerants may not contain an odor.

⚠ WARNING

PERSONAL INJURY AND PROPERTY DAMAGE HAZARD

For continued performance, reliability, and safety, the only approved accessories and replacement parts are those specified by the equipment manufacturer. The use of non-manufacturer approved parts and accessories could invalidate the equipment limited warranty and result in fire risk, equipment malfunction, and failure. Review the manufacturer's instructions and replacement parts catalogs available from your equipment supplier.

WARNING - RISK OF FIRE DUE TO FLAMMABLE REFRIGERANT USED. FOLLOW HANDLING INSTRUCTIONS CAREFULLY IN COMPLIANCE WITH NATIONAL REGULATIONS.

R-454B Refrigerant Safety Group **A2L** R-454B

NOTE: Risk of Fire. Flammable refrigerant used. To be repaired only by trained service personnel. Do not puncture refrigerant tubing.

1. **Installation (where refrigerant pipes are allowed)**

   Any person who is involved with working on or breaking into a refrigerant circuit should hold a current valid certificate from an industry-accredited assessment authority, which authorizes their competence to handle refrigerants safely in accordance with an industry recognized assessment specification.

   Maintenance and repair requiring the assistance of other skilled personnel shall be carried out under the supervision of the person competent in the use of flammable refrigerants.

   That the installation of pipe-work shall be kept to a minimum.

   That pipe-work shall be protected from physical damage.

   Where refrigerant pipes shall be compliance with national gas regulations.

   That mechanical connections shall be accessible for maintenance purposes.

   Be more careful that foreign matter (oil, water, etc) does not enter the piping. Also, when storing the piping, securely seal the opening by pinching, taping, etc.

   All working procedure that effects safety means shall only be carried by competent persons.

   Appliance shall be stored in a well ventilated area where the room size corresponds to the room area as specific for operation.

   Joints shall be tested with detection equipment with a capability of 1/8 oz (5grams)/year of refrigerant or better, with the equipment in standstill and under operation or under a pressure of at least these standstill or operation conditions after installation.

   In cases that require mechanical ventilation, ventilation openings shall be kept clear of obstruction.

   LEAK DETECTION SYSTEM installed. Unit must be powered except for service. For the unit with refrigerant sensor, when the refrigerant sensor detects refrigerant leakage, the indoor unit will display a error code and emit a buzzing sound, the compressor of outdoor unit will immediately stop, and the indoor fan will start running. The service life of the refrigerant sensor is 15 years. When the refrigerant sensor malfunctions, the indoor unit will display the error code FHCC. The refrigerant sensor can not be repaired and can only be replaced by the manufacture. It shall only be replaced with the sensor specified by the manufacture.

2. **Because a FLAMMABLE REFRIGERANT is used**

   The requirements for installation space of appliance and/or ventilation requirements are determined according to:

   – the mass charge amount (M) used in the appliance,

   –-the installation location,

   –-the type of ventilation of the location or of the appliance.

   –-piping material, pipe routing, and installation shall include protection from physical damage in operation and service, and be in compliance with national and local codes and standards, such as ASHRAE 15 or CSA B52. All field joints shall be accessible for inspection prior to being covered or enclosed.

   –-that protection devices, piping, and fittings shall be protected as far as possible against adverse environmental effects, for example, the danger of water collecting and freezing in relief pipes or the accumulation of dirt and debris;

   –-that piping in refrigeration systems shall be so designed and installed to minimize the likelihood of hydraulic shock damaging the system;

   –-that steel pipes and components shall be protected against corrosion with a rustproof coating before applying any insulation;

   –-that precautions shall be taken to avoid excessive vibration or pulsation;

   –-the minimum floor area of the room shall be mentioned in the form of a table or a single figure without reference to a formula;

   –-after completion of field piping for split systems, the field pipework shall be pressure tested with an inert gas and then vacuum tested prior to refrigerant charging, according to the following requirements:

   a. The required nitrogen pressure is 500 psi

   b. The test pressure after removal of pressure source shall be maintained for at least 1 hour with no decrease of pressure indicated by the test gauge, with test gauge resolution not exceeding 5 of the test pressure.

   c. During the evacuation test, after achieving a vacuum level specified in the manual or less, the refrigeration system shall be isolated from the vacuum pump and the pressure shall not rise above 1500 microns within 10 min. The vacuum pressure level shall be specified in the manual, and shall be the lessor of 500 microns or the value required for compliance with national and local codes and standards, which may vary between residential, commercial, and industrial buildings.

   –Field-made refrigerant joints indoors shall be tightness tested according to the following requirements: The test method shall have a sensitivity of 1/8 oz (5grams) per year of refrigerant or better under a pressure of at least 125 of the maximum allowable pressure. No leak shall be detected.

3. **Qualification of Workers**

   Any maintenance, service and repair operations must be performed by skilled and authorized personnel. Every working procedure that effects safety means shall only be carried out by competent persons that joined the training and achieved competence should be documented by a certificate. The training of these procedures is carried out by national training organizations or manufacturers that are accredited to teach the relevant national competency standards that may be set in legislation. Examples for such working procedures are:

   - breaking into the refrigerating circuit;
   - opening of sealed components;
   - opening of ventilated enclosures.

Information Servicing

1. **Checks to the Area**

   Prior to beginning work on systems containing flammable refrigerants, safety checks are necessary to ensure that the risk of ignition is minimized. For repair to the refrigerating system, the following precautions shall be complied with prior to conducting work on the system.

2. **Work Procedure**

   Works shall be undertaken under a controlled procedure so as to minimize the risk of a flammable gas or vapor being present while the work is being performed.

3. **General Work Area**

   All maintenance staff and others working in the local area shall be instructed on the nature of work being carried out. work in confined spaces shall be avoided.

4. **Checking for Presence of Refrigerant**

   The area shall be checked with an appropriate refrigerant detector prior to and during work, to ensure the technician is aware of potentially flammable atmospheres. Ensure that the leak detection equipment being used is suitable for use with flammable refrigerants, i.e. no sparking, adequately sealed or intrinsically safe.

5. **Presence of fire extinguisher**

   If any hot work is to be conducted on the refrigeration equipment or any associated parts, appropriate fire extinguishing equipment shall be available to hand. Have a dry power or CO2 fire extinguisher adjacent to the charging area.

6. **No ignition sources**

   No person carrying out work in relation to a REFRIGERATING SYSTEM which involves exposing any pipe work shall use any sources of ignition in such a manner that it may lead to the risk of fire or explosion. All possible ignition sources, including cigarette smoking, should be kept sufficiently far away from the site of installation, repairing, removing and disposal, during which refrigerant can possibly be released to the surrounding space. Prior to work taking place, the area around the equipment is to be surveyed to make sure that there are no flammable hazards or ignition risks. “No Smoking” signs shall be displayed.

7. **Ventilated area**

   Ensure that the area is in the open or that it is adequately ventilated before breaking into the system or conducting any hot work. A degree of ventilation shall continue during the period that the work is carried out. The ventilation should safely disperse any released refrigerant and preferably expel it externally into the atmosphere.

8. **Checks to the Refrigeration Equipment**

   Where electrical components are being changed, they shall be fit for the purpose and to the correct specification. At all times the manufacturer’s maintenance and service guidelines shall be followed. If in doubt consult the manufacturer’s technical department for assistance. The following checks shall be applied to installations using FLAMMABLE REFRIGERANTS:

   - the actual refrigerant charge is in accordance with the room size within which the refrigerant containing parts are installed;
   - the ventilation machinery and outlets are operating adequately and are not obstructed;
   - if an indirect refrigerating circuit is being used, the secondary circuits shall be checked for the presence of refrigerant;
   - marking to the equipment continues to be visible and legible, marking and signs that are illegible shall be corrected;
   - refrigeration pipe or components are installed in a position where they are unlikely to be exposed to any substance which may corrode refrigerant containing components, unless the components are constructed of materials which are inherently resistant to being corroded or are suitably protected against being so corroded.

9. **Checks to electrical devices**

   Repair and maintenance to electrical components shall include initial safety checks and component inspection procedures. If a fault exists that could compromise safety, then no electrical supply shall be connected to the circuit until it is satisfactorily dealt with. If the fault cannot be corrected immediately but it is necessary to continue operation, and adequate temporary solution shall be used. This shall be reported to the owner of the equipment so all parties are advised. **Initial safety checks shall include:**

   - that capacitors are discharged: this shall be done in a safe manner to avoid possibility of sparking
   - that there no live electrical components and wiring are exposed while charging, recovering or purging the system;
   - that there is continuity of earth bonding.

10. **Sealed electrical components shall be replaced.**

11. **Intrinsically safe components must be replaced.**

12. **Cabling**

    Check that cabling is not subjected to wear, corrosion, excessive pressure, vibration, sharp edges or any other adverse environmental effects. The check shall also take into account the effects of aging or continual vibration from sources such as compressors or fans.

13. **Detection of flammable refrigerants**

    Under no circumstances shall potential sources of ignition be used in the searching for or detection of refrigerant leaks. A halide torch (or any other detector using a naked flame) shall not be used.

    The following leak detection methods are deemed acceptable for refrigerant systems. Electronic leak detectors that have a sensitivity of 1/8 oz (5g)/year may be used to detect leaks of flammable refrigerants. (Detection equipment shall be calibrated in a refrigerant-free area.) Ensure that the detector is not a potential source of ignition and is suitable for the refrigerant used. Leak detection equipment shall be set at a percentage of the LFL of the refrigerant and shall be calibrated to the refrigerant employed, and the appropriate percentage of gas (25 maximum) is confirmed. Leak detection fluids are also suitable for use in external leak detection.

NOTE: Examples of leak detection fluids are:

— bubble method,

— fluorescent method agents.

If a leak is suspected, all open flames shall be removed/extinguished.

If a leakage of refrigerant is found which requires brazing, all of the refrigerant shall be recovered from the system, or isolated (by means of shut off valves) in a part of the system remote from the leak. See the following instructions of removal of refrigerant.

14. **Evacuation**

    When breaking into the refrigerant circuit to make repairs or for any other purpose, conventional procedures shall be used. However, for flammable refrigerants it is important that best practice be followed, since flammability is a consideration. The following procedure shall be adhered to:

    - safely remove refrigerant following local and national regulations; evacuate
    - purge the circuit with nitrogen
    - evacuate (requirement)
    - continuously flush or purge with nitrogen when using flame to open circuit
    - open the circuit

    The refrigerant charge shall be recovered into the correct recovery cylinders. Charging must be performed by liquid charging method.

    For appliances containing flammable refrigerants, the system shall be purged with oxygen-free nitrogen to render the appliance safe for flammable refrigerants. This process might need to be repeated several times. Compressed air or oxygen shall not be used for purging refrigerant systems.

    For appliances containing flammable refrigerants, refrigerants purging shall be achieved by breaking the vacuum in the system with oxygen-free nitrogen and continuing to fill until the working pressure is achieved, then venting to atmosphere, and finally pulling down to a vacuum (requirement). This process shall be repeated until no refrigerant is within the system (requirement). When the final oxygen-free nitrogen charge is used, the system shall be vented down to atmospheric pressure to enable work to take place. The outlet for the vacuum pump shall not be close to any potential ignition sources, and ventilation shall be available.

    Recovery: When removing refrigerant from a system, either for servicing or decommissioning, it is recommended good practice that all refrigerants are removed safely.

    When transferring refrigerant into cylinders, ensure that only appropriate refrigerant recovery cylinders are employed. Ensure that the correct number of cylinders for holding the total system charge is available. All cylinders to be used are designated.

15. Charging procedures

In addition to conventional charging procedures, the following requirements shall be followed:

- Work shall be undertaken with appropriate tools only (In case of uncertainty, please consult the manufacturer of the tools for use with flammable refrigerants).
- Ensure that contamination of different refrigerants does not occur when using charging equipment. Hoses or lines shall be as short as possible to minimize the amount of refrigerant contained in them.
- Charging must be performed by liquid charging method.
- Ensure that the refrigeration system is grounded prior to charging the system with refrigerant.
- Label the system when charging is complete (if not already).
- Extreme care shall be taken not to overfill the refrigeration system.
- Prior to recharging the system it shall be pressure tested with oxygen free nitrogen (OFN). The system shall be leak tested on completion of charging but prior to commissioning. A follow up leak test shall be carried out prior to leaving the site.

16. Decommissioning

Before carrying out this procedure, it is essential that the technician is completely familiar with the equipment and all its detail. It is recommended good practice that all refrigerants are recovered safely. Prior to the task being carried out, an oil and refrigerant sample shall be taken in case analysis is required prior to re-use of recovered refrigerant. It is essential that electrical power is available before the task is commenced.

a. Become familiar with the equipment and its operation.
b. Isolate system electrically
c. Before attempting the procedure ensure that:
   - mechanical handling equipment is available, if required, for handling refrigerant cylinders;
   - all personal protective equipment is available and being used correctly;
   - the recovery process is supervised at all times by a competent person;
   - recovery equipment and cylinders conform to the appropriate standards.
d. Pump down refrigerant system, if possible.
e. If a vacuum is not possible, make a manifold so that refrigerant can be removed from various parts of the system.
f. Make sure that cylinder is situated on the scales before recovery takes place.
g. Start the recovery machine and operate in accordance with instructions.
h. Do not overfill cylinders (no more than 80 volume liquid charge)
i. Do not exceed the maximum working pressure of the cylinder, even temporarily.
j. When the cylinders have been filled correctly and the process completed, make sure that the cylinders and the equipment are removed from site promptly and all isolation valves on the equipment are closed off.
k. Recovered refrigerant shall not be charged into another refrigeration system unless it has been cleaned and checked.

17. Labeling

Equipment shall be labeled stating that it has been de-commissioned and emptied of refrigerant. The label shall be dated and signed. For appliances containing FLAMMABLE REFRIGERANTS, ensure that there are labels on the equipment stating the equipment contains FLAMMABLE REFRIGERANT.

18. Recovery

When removing refrigerant from a system, either for servicing or decommissioning, it is recommended good practice that all refrigerants are removed safely.

When transferring refrigerant into cylinders, ensure that only appropriate refrigerant recovery cylinders are employed. Ensure that the correct number of cylinders for holding the total system charge is available. All cylinders to be used are designated for the recovered refrigerant and labeled for that refrigerant (i. e. special cylinders for the recovery of refrigerant). Cylinders shall be complete with pressure-relief valve and associated shut-off valves in good working order. Empty recovery cylinders are evacuated and, if possible, cooled before recovery occurs.

The recovery equipment shall be in good working order with a set of instructions concerning the equipment that is at hand and shall be suitable for the recovery of the flammable refrigerant. If in doubt, the manufacturer should be consulted. In addition, a set of calibrated weighing scales shall be available and in good working order. Hoses shall be complete with leak-free disconnect couplings and in good condition.

The recovered refrigerant shall be processed according to local legislation in the correct recovery cylinder, and the relevant waste transfer note arranged. Do not mix refrigerants in recovery units and especially not in cylinders.

If compressors or compressor oils are to be removed, ensure that they have been evacuated to an acceptable level to make certain that flammable refrigerant does not remain within the lubricant. The compressor body shall not be heated by an open flame or other ignition sources to accelerate this process. When oil is drained from a system, it shall be carried out safely.

19. Transportation, marking and storage for units

a. Transport of equipment containing flammable refrigerants

   Compliance with the transport regulations.

b. Marking of equipment using signs

   Compliance with local regulations.

c. Disposal of equipment using flammable refrigerants

   Compliance with national regulations.

d. Storage of equipment/appliances

   The storage of equipment should be in accordance with the manufacturer's instructions.

e. Storage of packed (unsold) equipment

   Storage package protection should be constructed such that mechanical damage to the equipment inside the package will not cause a leak of the refrigerant charge. The maximum number of pieces of equipment permitted to be stored together will be determined by local regulations.

Manufacturer reserves the right to change, at any time, specifications and designs without notice and without obligations.

Table 1 — Explanation of symbols displayed on the indoor unit or outdoor unit

A2L	**WARNING**	This symbol shows that this appliance used a flammable refrigerant. If the refrigerant is leaked and exposed to an external ignition source, there is a risk of fire.
	CAUTION	This symbol shows that the operation manual should be read carefully.
	CAUTION	This symbol shows that a service personnel should be handling this equipment with reference to the installation manual.
	CAUTION	
	CAUTION	This symbol shows that information is available such as the operating manual or installation manual.

Table 2 — A (min)

Ho, release height ft (m)

MC or Mrel Refrigerant Charge Amount pounds (kilograms)	MC OR MREL LBS (KG)	≤ 7.2 (2.2)	7.5 (2.3)	7.9 (2.4)	8.5 (2.6)	9.2 (2.8)	9.8 (3.0)
	≤ 3.91 (1.776)	12 (1.10)					
	4.0 (1.8)	60 (5.53)	57 (5.29)	55 (5.07)	50 (4.68)	47 (4.34)	44 (4.05)
	4.4 (2.0)	66 (6.14)	63 (5.88)	61 (5.63)	56 (5.2)	52 (4.83)	48 (4.5)
	4.9 (2.2)	73 (6.76)	70 (6.46)	67 (6.19)	62 (5.72)	57 (5.31)	53 (4.95)
	5.3 (2.4)	79 (7.37)	76 (7.05)	73 (6.76)	67 (6.24)	62 (5.79)	58 (5.41)
	5.7 (2.6)	86 (7.99)	82 (7.64)	79 (7.32)	73 (6.76)	68 (6.27)	63 (5.86)
	6.2 (2.8)	93 (8.6)	89 (8.23)	85 (7.88)	78 (7.28)	73 (6.76)	68 (6.31)
	6.6 (3.0)	99 (9.21)	95 (8.81)	91 (8.45)	84 (7.8)	78 (7.24)	73 (6.76)
	7.1 (3.2)	106 (9.83)	101 (9.4)	97 (9.01)	90 (8.32)	83 (7.72)	78 (7.21)
	7.5 (3.4)	112 (10.44)	108 (9.99)	103 (9.57)	95 (8.84)	88 (8.2)	82 (7.66)
	7.9 (3.6)	119 (11.06)	114 (10.58)	109 (10.14)	101 (9.36)	94 (8.69)	87 (8.11)
	8.4 (3.8)	126 (11.67)	120 (11.16)	115 (10.7)	106 (9.88)	99 (9.17)	92 (8.56)
	8.8 (4.0)	132 (12.29)	126 (11.75)	121 (11.26)	112 (10.4)	104 (9.65)	97 (9.01)
	9.3 (4.2)	139 (12.9)	133 (12.34)	127 (11.82)	117 (10.91)	109 (10.14)	102 (9.46)
	9.7 (4.4)	145 (13.51)	139 (12.93)	133 (12.39)	123 (11.43)	114 (10.62)	107 (9.91)
	10.1 (4.6)	152 (14.13)	145 (13.51)	139 (12.95)	129 (11.95)	119 (11.1)	112 (10.36)
	10.6 (4.8)	159 (14.74)	152 (14.1)	145 (13.51)	134 (12.47)	125 (11.58)	116 (10.81)
	11 (5.0)	165 (15.36)	158 (14.69)	152 (14.08)	140 (12.99)	130 (12.07)	121 (11.26)
	11.5 (5.2)	172 (15.97)	164 (15.28)	158 (14.64)	145 (13.51)	135 (12.55)	126 (11.71)
	11.9 (5.4)	179 (16.58)	171 (15.86)	164 (15.2)	151 (14.03)	140 (13.03)	131 (12.16)
	12.3 (5.6)	185 (17.2)	177 (16.45)	170 (15.77)	157 (14.55)	145 (13.51)	136 (12.61)
	12.8 (5.8)	192 (17.81)	183 (17.04)	176 (16.33)	162 (15.07)	151 (14)	141 (13.06)
	13.2 (6.0)	198 (18.43)	190 (17.63)	182 (16.89)	168 (15.59)	156 (14.48)	145 (13.51)
	13.7 (6.2)	205 (19.04)	196 (18.21)	188 (17.45)	173 (16.11)	161 (14.96)	150 (13.96)
	14.1 (6.4)	212 (19.66)	202 (18.8)	194 (18.02)	179 (16.63)	166 (15.44)	155 (14.41)
	14.6 (6.6)	218 (20.27)	209 (19.39)	200 (18.58)	185 (17.15)	171 (15.93)	160 (14.86)
	15 (6.8)	225 (20.88)	215 (19.98)	206 (19.14)	190 (17.67)	177 (16.41)	165 (15.32)
	15.4 (7.0)	231 (21.5)	221 (20.56)	212 (19.71)	196 (18.19)	182 (16.89)	170 (15.77)
	15.9 (7.2)	238 (22.11)	228 (21.15)	218 (20.27)	201 (18.71)	187 (17.37)	175 (16.22)

Amin is the required minimum room area in ft2/m2.
mc is the actual refrigerant charge in the system in lbs/kg.
mREL is the refrigerant releasable charge in lbs/kg.
hinst is the height of the bottom of the unit relative to the floor of the room after installation.
Ho is the vertical distance in feet (meters) from the floor to the point of release when the appliance is installed.
Ho, release height = install height

For R454B refrigerant charge amount and minimum room area:

The indoor unit should be installed at least 5.9ft/1.8m above the floor, and the minimum room area for operation or storage should be as specified in Table 2.

FOR RELEASABLE CHARGE LIMITED SYSTEM

SAFETY SHUT-OFF VALVES are used in some multiple outdoor units as shown in Table 3. This is for the purposes of limiting the releasable charge, which is activated by a leak detection system.

⚠ WARNING

SAFETY SHUT-OFF VALVES default to fully closed position when the appliance is de-energized, so refrigerant will not be completely released even when it was dismantled. Ensure the complete release of refrigerant through one of following methods before repairing the machine.

Method 1: Release refrigerant while the machine is powered on.

Method 2: Manually open the safety shut-off valve using a magnetic ring.

Table 3 — Release of Refrigerant Flow

MODEL	OUTDOOR UNIT	RELEASABLE CHARGE LIMITED SYSTEM
18K	D5CMTAH18CAK	No
27K	D5CMTAH27DAK	Yes
36K	D5CMTAH36EAK	Yes
48K	D5CMTAH48FAK	Yes

Releasable charge (mrel) of system should be calculated based on internal volume of all indoor units and connecting pipes. Each indoor unit corresponds to a releasable charge as shown in Table 4. Add them up based on the combination of indoor units, and then add to the basic releasable charge of 7oz/204g. This will give you the total releasable charge of the system.

NOTE: The calculation is based on the standard connection pipe length of 24.6ft/7.5m for each indoor units. An extra releasable charge should be added per meter exceeding 24.6ft/7.5m.

Table 4 — Releasable Charge of Each Unit

UNIT SIZE	INDOOR UNIT METERING DEVICE	TOTAL LINE LENGTH ft (m)		ADDITIONAL CHARGE, oz/ft. ft (m)			
		Min	Max	10-24.6 (3-7.5)	>24.6-82 (7.5-25)	>82-98.4 (25-30)	>98.4-114.8 (30-35)
18	None	9.84 (3)	196.8 (60)	None	0.16		
27			262.4 (80)				0.16
36			262.4 (80)				
48			262.4 (80)				

PERFORMANCE

Table 5 — Performance with Ductless Units

Indoor unit type			Ductless			
Outdoor model			D5CMTAH18CAK	D5CMTAH27DAK	D5CMTAH36EAK	D5CMTAH48FAK
Performance Data	Power supply	V;Ph;Hz	208/230V;1Ph;60HZ	208/230V;1Ph;60HZ	208/230V;1Ph;60HZ	208/230V;1Ph;60HZ
	Cooling Rated Capacity (DOE A2 - 95°F (35°C))	Btu/h	18000	26400	36000	48000
	Cooling Capacity Range	Btu/h	5400~21200	7200~28600	9000~36200	12000~54000
	SEER2	Btu/h.W	18.5	18.5	18.8	18.7
	EER2 (DOE A2 - 95°F(35°C))	Btu/h.W	11.7	10.5	9.5	10
	Heating Rated Capacity (DOE H12 - 47°F(8°C))	Btu/h	18000	26400	36000	48000
	Heating Capacity Range	Btu/h	5700~20600	8400~30000	10000~40000	13000~54000
	COP (DOE H12 - 47°F(8°C)	W/W	3.4	3.3	2.7	3.2
	HSPF2 IV	Btu/h.W	9.2	8.5	8.5	9.5
	HSPF2 V	Btu/h.W	7.5	7.0	6.6	7.3
	Cooling Rated Capacity (DOE B2 - 82°F (28°C))	Btu/h	18800	29400	38000	52500
	EER (DOE B2 - 82°F(28°C))	Btu/h.W	15.0	12.5	11.5	12
	Heating Rated Capacity (DOE H32 - 17°F (-8°C))	Btu/h	15000	16000	25600	37000
	COP (DOE H32 - 17°F (-8°C)	W/W	2.4	2.4	2.2	2.3
	Heating Maximum Capacity (17°F)(-8°C)	Btu/h	15000	16000	26000	37000
	Heating Rated Capacity (ODE H42 - 5°F (-21°C))	Btu/h	15000	18600	25200	36000
	COP (DOE H42 - 5°F(-21°C))	W/W	2.0	2.0	1.9	1.85
	Heating Maximum Capacity (5°F)(-15°C)	Btu/h	15000	18600	25200	36000
	Cooling Capacity at 109 F (43°C)	Btu/h	14800	21000	23000	45000
	Heating Capacity at -4F (-20°C)	Btu/h	11300	10500	17700	28000
	Heating Capacity at -13F (-25°C)	Btu/h	8700	7800	14500	16000
	Heating Capacity at -22F (-30°C)	Btu/h	/	/	/	/

ACCESSORIES

The air conditioning system comes with the following accessories. Use all of the installation parts and accessories to install the air conditioner. Improper installation may result in water leakage, electrical shock and fire, or cause the equipment to fail. The items are not included with the air conditioner must be purchased separately.

Table 6 — Accessories

Name of Accessory	Quantity	Image
Manual	1~4	
Transfer Connector (Packed with the indoor or outdoor unit) NOTE: Pipe size may differ from appliance to appliance. To meet different pipe size requirements, sometimes the pipe connections need a transfer connector installed on the outdoor unit.	Optional Part (1 piece per indoor unit))	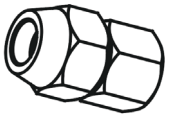
	Optional Part (1-8 pieces per outdoor unit))	
Drain Joint	1	
Seal Ring	1	
Drain pipe	1	

OPTIONAL ACCESSORIES

There are two types of remote controls: wired and wireless.

Select a remote controller based on customer preferences and requirements and install in an appropriate place.

Refer to catalogs and technical literature for guidance on selecting a suitable remote controller.

Table 7 — Pipe Specifications

Name	Model	Liquid Side	Gas Side	Remarks
Connecting Pipe Assembly	18K	Φ1/4in (Φ6.35)	Φ3/8in (Φ9.52)	Parts you must purchase separately. Consult the dealer about the proper pipe size of the unit you purchased.
	27K/36K/48K	Φ1/4in (Φ6.35)	Φ3/8in (Φ9.52) + 1/2in (Φ12.7)	

DIMENSIONS

Table 8 — Dimensions and Weights

System Size		18K	27K	36K	48K
		(208/230 V)	(208/230 V)	(208/230 V)	(208/230 V)
Height (H)	inch	26.5	31.89	31.89	52.48
	mm	673	810	810	1333
Width (W)	inch	35.04	37.24	37.24	37.48
	mm	890	946	946	952
Depth (D)	inch	13.46	16.14	16.14	16.34
	mm	342	410	410	415
Weight -Net	lbs.	100.53	138.89	168.87	222
	kg	45.6	63	76.6	100.7

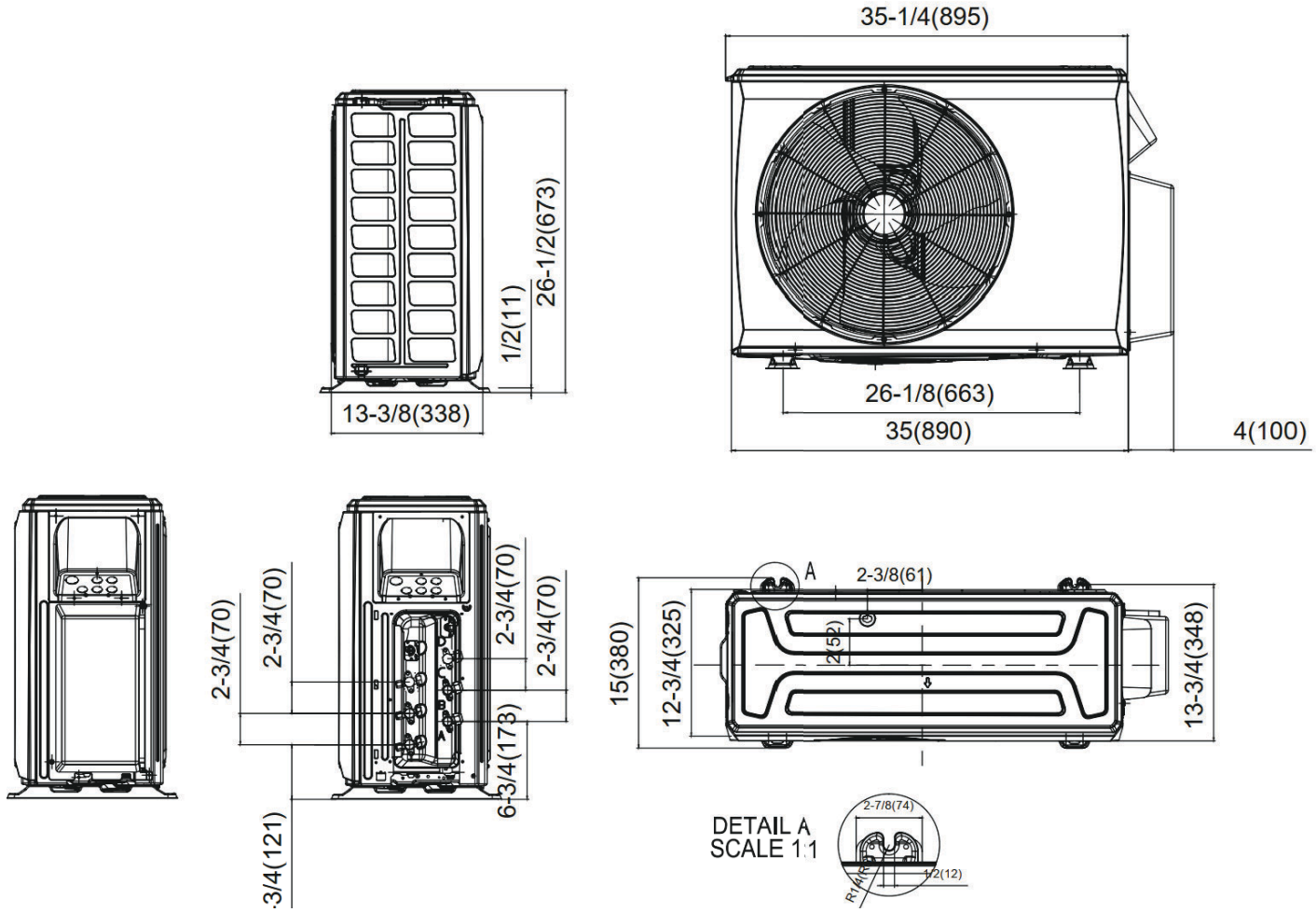

Fig. 2 —Dimensions - Size 18K

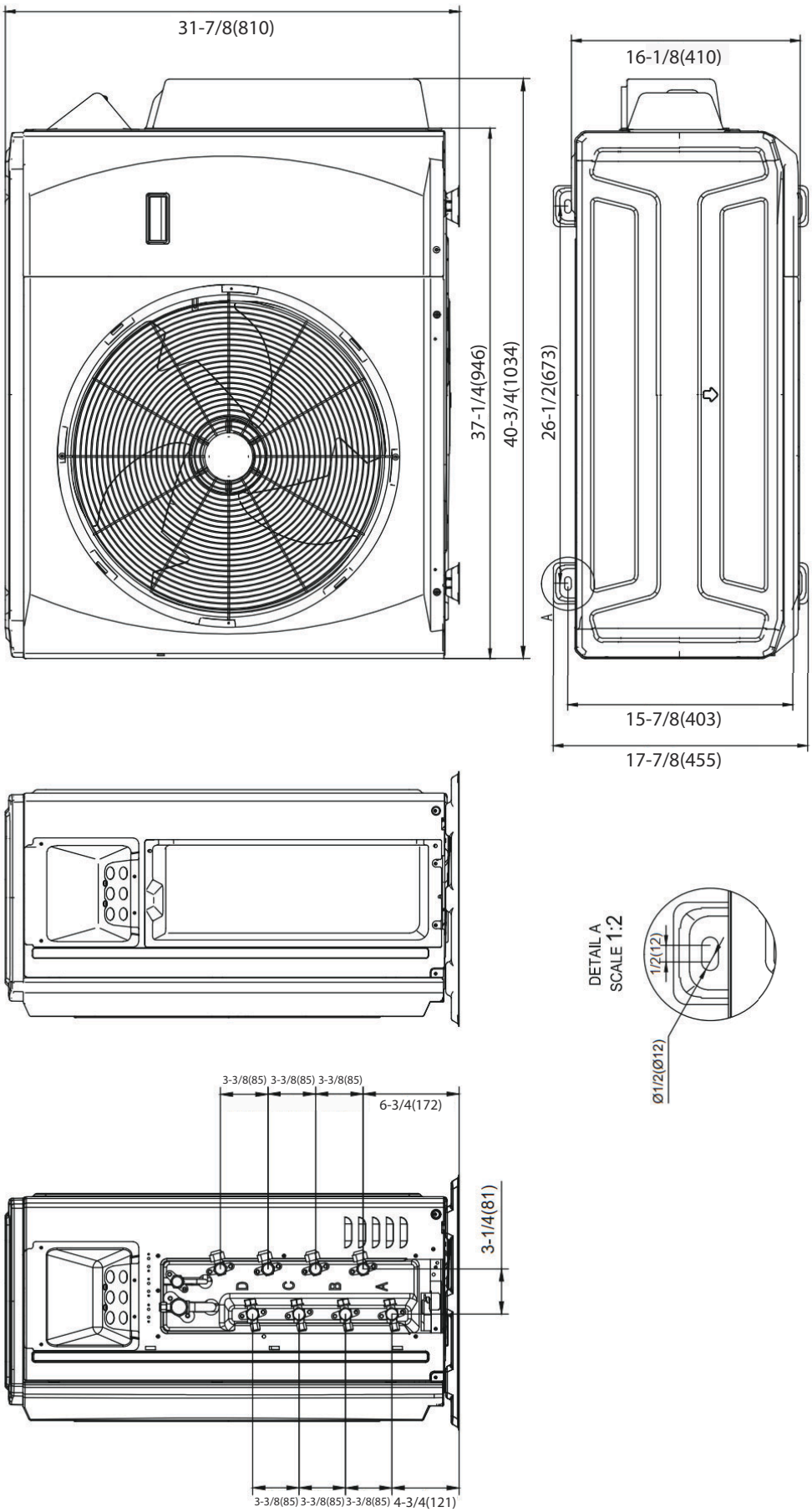

Fig. 3 —Dimensions - Size 27K

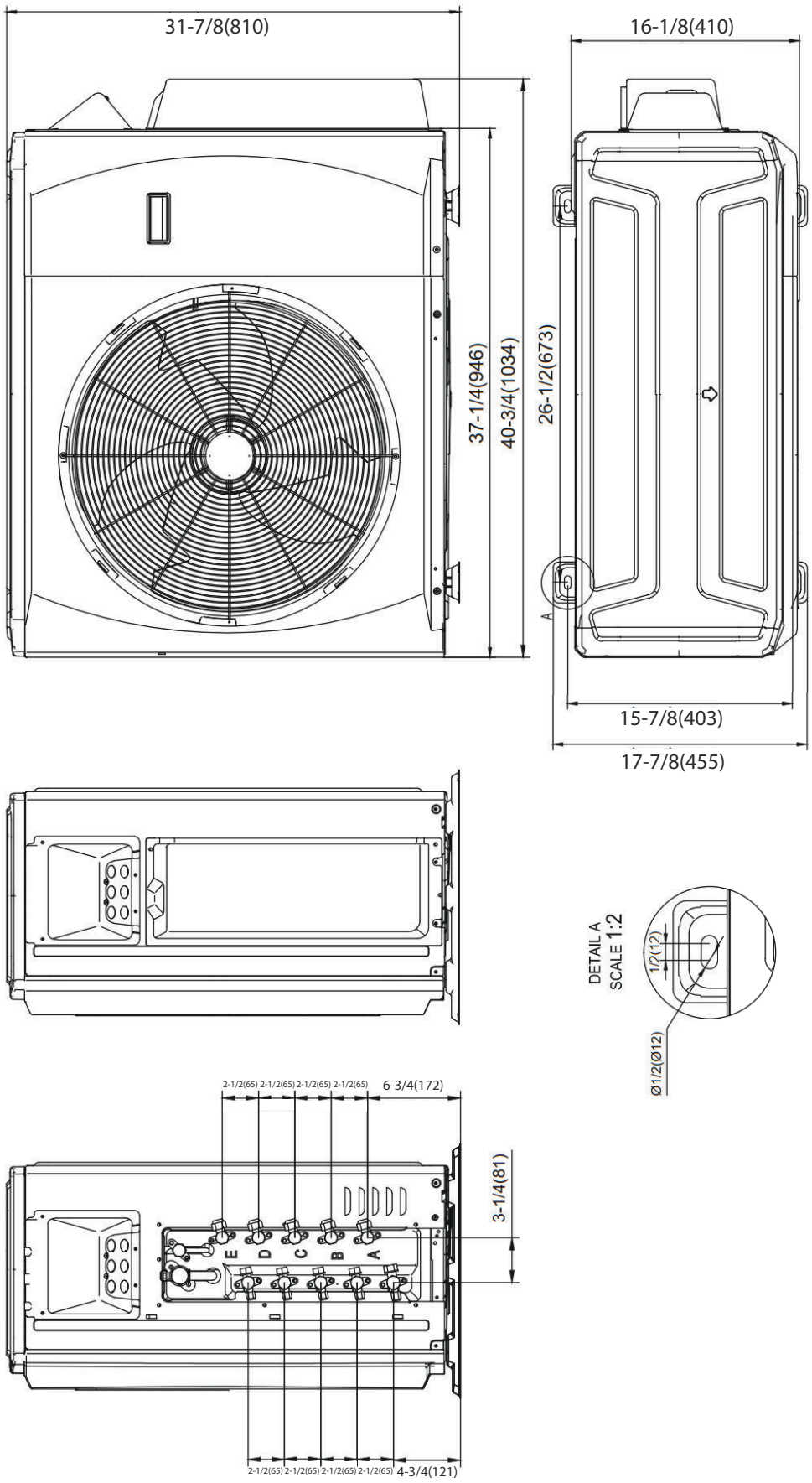

Fig. 4 —Dimensions - Size 36K

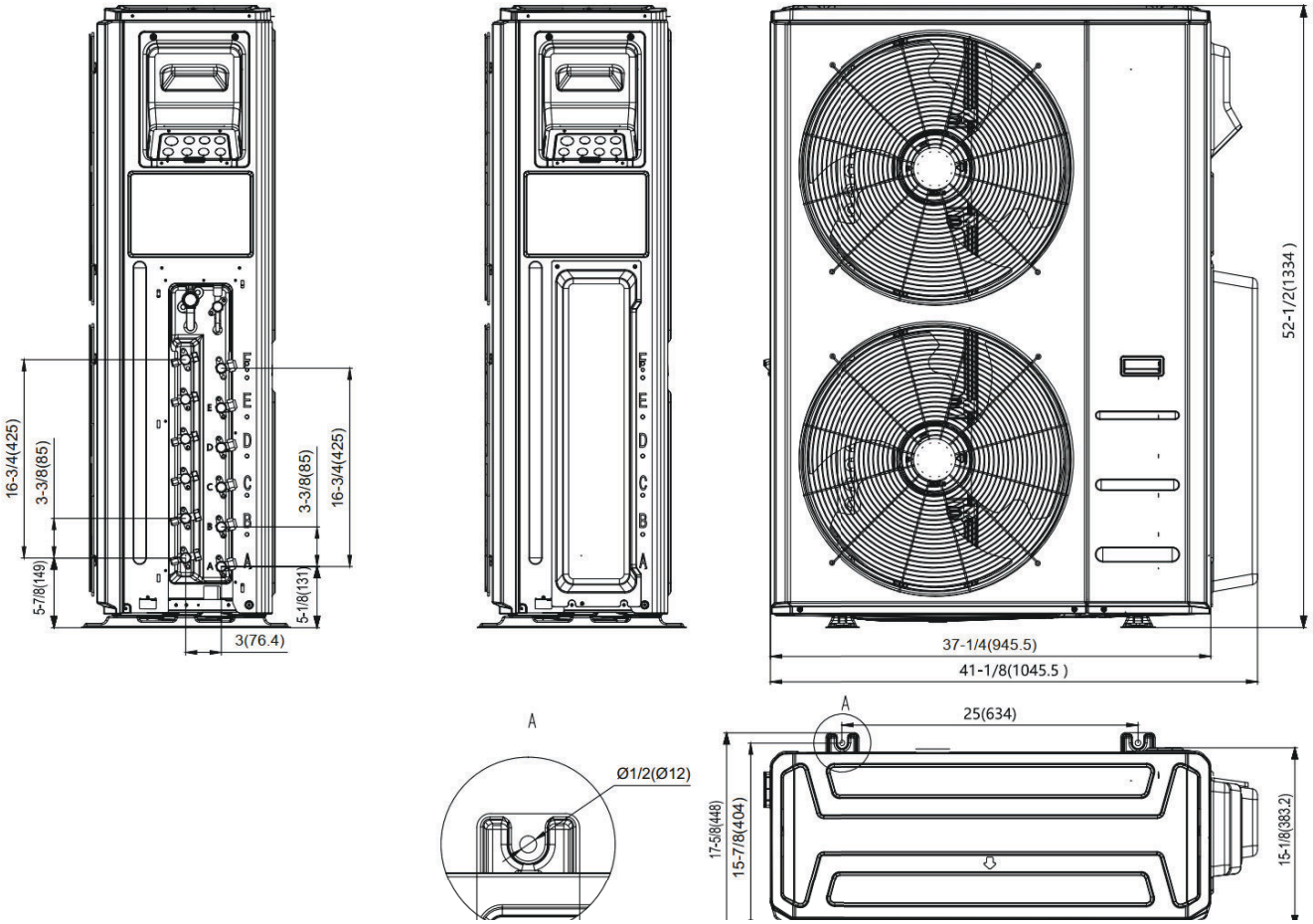

Fig. 5 —Dimensions - Size 48K

CLEARANCES

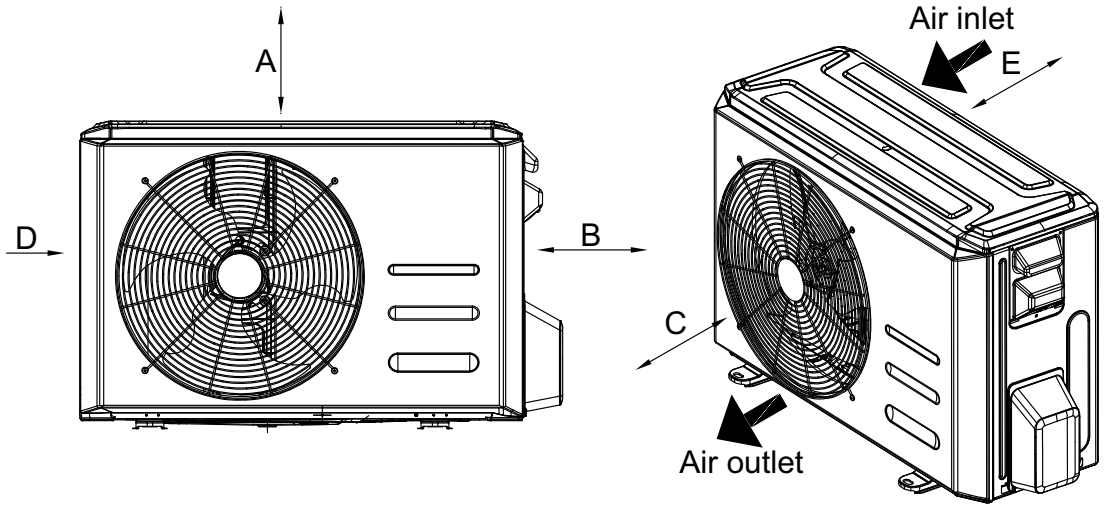

Fig. 6 — Outdoor Unit Clearances

Table 9 — Outdoor Unit Clearance Dimensions

UNIT	MINIMUM VALUE in. (mm)
A	20 (500)
B	14 (350)
C	20 (500)
D	4 (100)
E	4 (100)

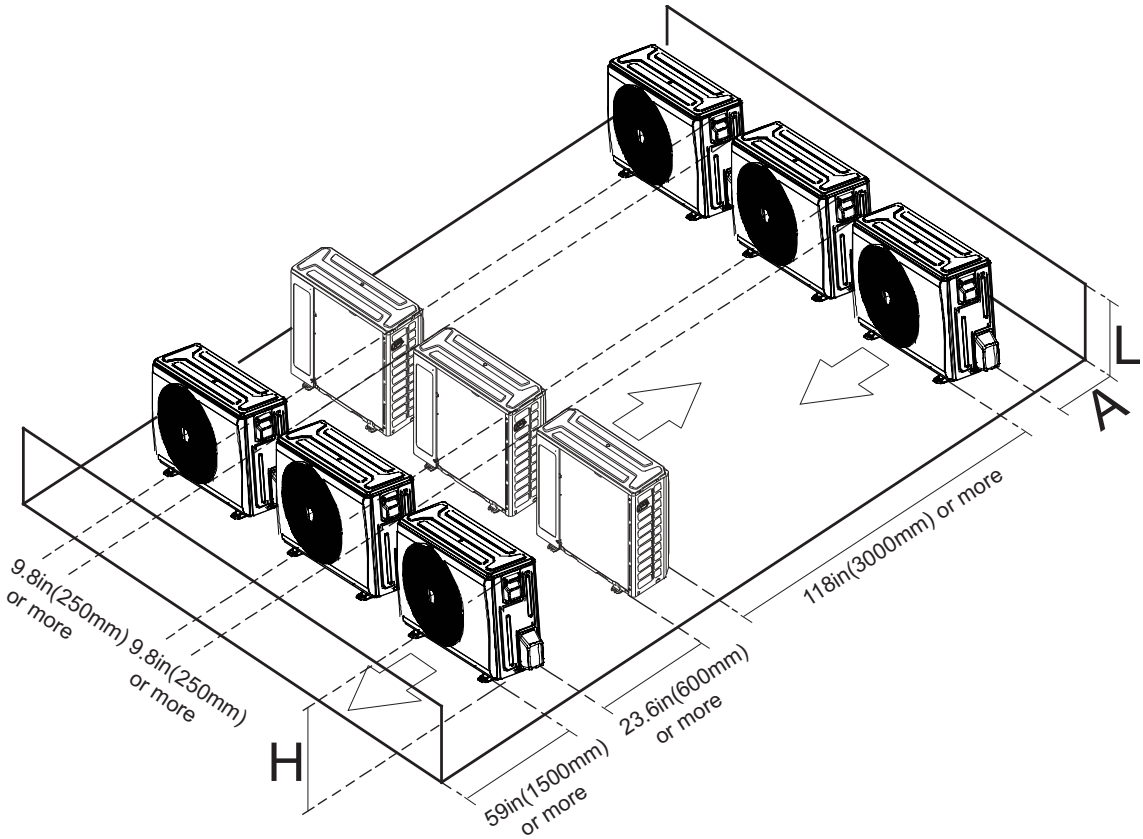

Fig. 7 —Clearances for Multiple Units

SPECIFICATIONS

Table 10 — Specifications

Outdoor model			D5CMTAH18CAK	D5CMTAH27DAK	D5CMTAH36EAK	D5CMTAH48FAK
	Power supply	V;Ph;Hz	208/230V;1Ph;60HZ	208/230V;1Ph;60HZ	208/230V;1Ph;60HZ	208/230V;1Ph;60HZ
COMPRESSOR SPECIFICATIONS	Model		KTN150D30UFZA	KTM240D46UKT2	KTF310D43UMT	KTQ420D1UMU
	Type		Twin-ROTARY	ROTARY	ROTARY	ROTARY
	Brand		GMCC	GMCC	GMCC	GMCC
	Capacity	W	4730	7600	10010	13700
		Btu/h	16139	25931	34154	46744
	Input	W	1250	2045	2765	3700
	Rated current	A	8.1	9.30	5.38	7.02
	Refrigerant Oil		ESTER OIL	ESTER OIL	ESTER OIL	ESTER OIL
	Oil Type		VG74	VG74	VG74	VG74
	Oil Charge	fl. Oz	15.22	20.97	33.82	47.35
OUTDOOR FAN 1# SPECIFICATIONS	Material	-	Acrylonitrile Styrene +20GF	Acrylonitrile Styrene +20GF	Acrylonitrile Styrene +20GF	Acrylonitrile Styrene +20GF
	Type	-	ZL-535*133*12-3KFN	ZL-560*139*12-3KN	ZL-560*139*12-3KN	ZL-554*148*12-3KFN
	Diameter	inch	21.1	22.0	22.0	21.8
		mm	535	560	560	554
	Height	inch	5.2	5.5	5.5	5.8
		mm	133	139	139	148
OUTDOOR FAN 2# SPECIFICATIONS	Number of Fans	-	1	1	1	2
OUTDOOR MOTOR 1# SPECIFICATIONS	Model	-	ZKFN-80-10-1L	ZKFN-120-8-9	ZKFN-120-8-9	ZKFN-85-10-1L
	Type	-	DC	DC	DC	DC
	Input	W	78.6	80.0	107.0	92
	Max. input	W	239.0	176	176	167
	Output	W	59	60	80.3	69
	FLA	A	1.0	1.2	1.3	2.5
	Rated HP	HP	0.08	0.08	0.11	0.09
	Range of current	Amps	0.33~1.85	0.79~1.67	0.79~1.67	0.77~1.44
	Rated current	Amps	0.71	1.03	1.21	1.00
	Speed	rev/min	750/600/500	800/700/650	900/750/600	800/700/650
	Rated RPM	rev/min	750	800	900	800
	Insulation class	-	B	B	B	B
	Safe class	-	IP24	IPX4	IPX4	IP44
	Number of Motors	-	1	1	1	2

Manufacturer reserves the right to change, at any time, specifications and designs without notice and without obligations.

Outdoor model			D5CMTAH18CAK	D5CMTAH27DAK	D5CMTAH36EAK	D5CMTAH48FAK
OUTDOOR REFRIGERANT COIL 1# SPECIFICATIONS	Number of rows	Rows	2	2	2.5	2
	Tube outside dia.	inch	0.276	0.276	0.276	0.276
		mm	Φ7	Φ7	Φ7	Φ7
	Nominal Tube Wall	mm	0.00945 (0.24)	0.00945 (0.24)	0.00945 (0.24)	0.00945 (0.24)
	Tube Enhancement	(Yes/No)	Yes	Yes	Yes	Yes
	Tube Material		Copper	Copper	Copper	Copper
	Tube pitch(a)x row pitch(b)	inch	0.83× 0.87	0.83× 0.53	0.83× 0.87	0.83× 0.87
		mm	21x22	21x13.37	21x22	21x22
	Fin Spacing	FPI	20	19	20	22
		mm	1.3	1.4	1.3	1.2
	Fin type		Plain fin	Louvered	Plain fin	Plain fin
	Fin Material		Gold hydrophilic aluminum	Gold hydrophilic aluminum	Gold hydrophilic aluminum	Gold hydrophilic aluminum
	Coil length x height x width	inch	35.43x23.98x0.87+ 34.06x23.98x0.87	39.57x29.76x0.53+ 38.78x29.76x0.53	39.17x30x2.6	38.39x24.8x1.73
		mm	900*609*22+865*609*22	1005x756x13.37+985x756x13.37	995x762x66	975x630x44
	Face area	ft2	5.90	8.18	8.16	6.61
	Number of circuits	#	6	6	12	10
	High Burst Pressure	Psi (MPa)	550(3.79)	550(3.79)	550(3.79)	550(3.79)
	Low Burst Pressure	Psi (MPa)	340(2.34)	340(2.34)	340(2.34)	340(2.34)
OUTDOOR REFRIGERANT COIL 2# SPECIFICATIONS	Number of rows	Rows	N/A	N/A	N/A	2
	Tube outside dia.	inch	N/A	N/A	N/A	0.276
		mm	N/A	N/A	N/A	Φ7
	Nominal Tube Wall	mm	N/A	N/A	N/A	0.00945 (0.24)
	Tube Enhancement	(Yes/No)	N/A	N/A	N/A	Yes
	Tube Material		N/A	N/A	N/A	Copper
	Tube pitch(a)x row pitch(b)	inch	N/A	N/A	N/A	0.83× 0.87
		mm	N/A	N/A	N/A	21x22
	Fin Spacing	FPI	N/A	N/A	N/A	22
		mm	N/A	N/A	N/A	1.2
	Fin type		N/A	N/A	N/A	Plain fin
	Fin Material		N/A	N/A	N/A	Gold hydrophilic aluminum
	Coil length x height x width	inch	N/A	N/A	N/A	38.39x24.8x1.73
		mm	N/A	N/A	N/A	975x630x44
	Face area	ft2	N/A	N/A	N/A	6.61
	Number of circuits	#	N/A	N/A	N/A	10
	High Burst Pressure	Psi (MPa)	N/A	N/A	N/A	550(3.79)
	Low Burst Pressure	Psi (MPa)	N/A	N/A	N/A	340(2.34)

Outdoor model				D5CMTAH18CAK	D5CMTAH27DAK	D5CMTAH36EAK	D5CMTAH48FAK
Piping and Refrigerant Information		Refrigerant Type	Type	**R454B**	**R454B**	**R454B**	**R454B**
		Charge Amount	lb. (kg)	**3.86(1.75)**	**5.29(2.4)**	**7.54(3.42)**	**9.26(4.2)**
		Liquid Pipe (size - connection type)	In (mm)	3x1/4in(3x6.35mm)	4x1/4in(4x6.35mm)	5x1/4in(5x6.35mm)	6x1/4in(5x6.35mm)
		Suction Pipe (size - connection type)	In (mm)	3x3/8in(3x9.52mm)	3x3/8in+1x1/2in(3x9.52mm+1x12.7mm)	3x3/8in+2x1/2in(3x9.52mm+2x12.7mm)	4x3/8in+2x1/2in(4x9.52mm+2x12.7mm)
		Min. Piping Length per each indoor unit	ft. (m)	9.8 (3)	9.8 (3)	9.8 (3)	9.8 (3)
		Standard Piping Length per each indoor unit	ft. (m)	24.6 (7.5)	24.6 (7.5)	24.6 (7.5)	24.6 (7.5)
		Max. outdoor-indoor height difference (OU higher than IU)	ft. (m)	49.21(15)	49.21(15)	49.21(15)	49.21(15)
		Max. outdoor-indoor height difference (IU higher than OU)	ft. (m)	49.21(15)	49.21(15)	49.21(15)	49.21(15)
		Max. Piping Length with no additional refrigerant charge per System (Standard Piping length x No. of Zones)	ft. (m)	73.8 (22.5)	98.4(30)	123(37.5)	147.6(45)
		Additional refrigerant charge (between Standard – Max piping length)	Oz/ft (g/m)	0.16(15)	0.16(15)	0.16(15)	0.16(15)
		Max. Length per each indoor unit	ft. (m)	98.4(30)	114.8(35)	114.8(35)	114.8(35)
		Total Maximum Piping Length per system	ft. (m)	196.9(60)	262.5(80)	262.5(80)	262.5(80)
		Number of IDU	ft. (m)	3	4	5	6
AIRFLOW SPECIFICATIONS		Outdoor (CFM)	CFM	1764.71	2129.41	2147.06	4500.00
SOUND DATA		Outdoor Sound Pressure Level	dB(A)	59.0	62.0	62.5	62
ENVIRONMENTAL SPECIFICATIONS	Cooling Operating Range	Indoor Min - Max DB	°F	60~90	60~90	60~90	60~90
			(°C)	(1632)	(16~32)	(16~32)	(16~32)
		Indoor Min - Max WB		59-84	59-84	59-84	59-84
			(°C)	(15-29)	(15-29)	(15-29)	(15-29)
		Outdoor Min - Max DB	°F	-13~122	-13~122	-13~122	-13~122
			(°C)	(-25~50)	(-25~50)	(-25~50)	(-25~50)
	Heating Operating Range	Indoor Min - Max DB	°F	32~86	32~86	32~86	32~86
			(°C)	(0~30)	(0~30)	(0~30)	(0~30)
		Outdoor Min - Max DB	°F	-13~75	-13~75	-13~75	-13~75
			(°C)	(-25~24)	(-25~24)	(-25~24)	(-25~24)
	Non-operating environment Storage	Temperature range (DB)	°F	-49-140	-49-140	-49-140	-49-140
			(°C)	(-45-60)	(-45-60)	(-45-60)	(-45-60)
	Operation Humidity	%		0-80%	0-80%	0-80%	0-80%
	Ambient Humidity	%		0-80%	0-80%	0-80%	0-80%

INSTALLATION

INSTALLATION SUMMARY

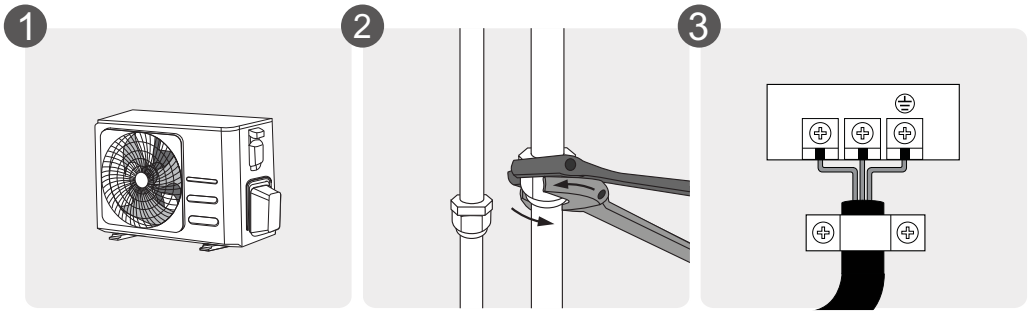

Install the outdoor unit

Connect the refrigerant pipes

Connect the wires

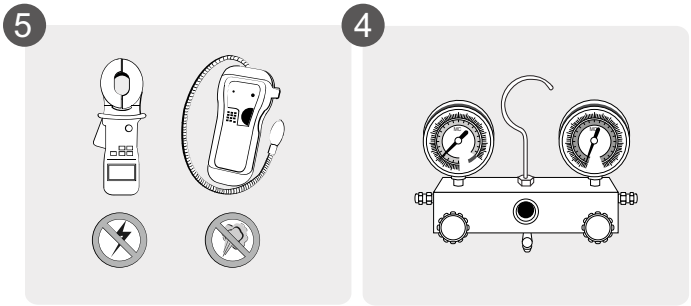

Perform a test run

Evacuate the refrigeration system

⚠ CAUTION

After confirmation of the above conditions, follow these guidelines when performing wiring:

- Always have an individual power circuit specifically for the unit. Always follow the circuit diagram posted on the inside of the control cover.
- Screws fastening the wiring in the casing of electrical fittings may come loose during transportation. Because loose screws may cause wire burn-out, check that the screws are tightly fastened.
- Check the specifications for the power source.
- Confirm that electrical capacity is sufficient.
- Confirm that starting voltage is maintained at more than 90 percent of the rated voltage marked on the name plate.
- Confirm that the cable thickness is as specified in the power source specifications.
- Always install an earth leakage circuit breaker in wet or moist areas.
- The following can be caused by a drop in voltage: vibration of a magnetic switch, damaging the contact point, broken fuses, and disturbance of normal functioning.
- Disconnection from a power supply must be incorporated into the fixed wiring. It must have an air gap contact separation of at least 3mm in each active (phase) conductors.
- Before accessing terminals, all supply circuits must be disconnected.

NOTE: To satisfy the EMC compulsory regulations, which is required by the international standard CISPR 14-1:2005/A2:2011 in specific countries or districts ,please make sure you apply the correct magnetic rings on your equipment according to the wiring diagram that adhere to the your equipment. Please contact your distributor or installer to get further information and purchase magnetic rings (The supplier of magnetic ring is TDK (model ZCAT3035-1330) or similar).

INSTALL OUTDOOR UNIT

1. **SELECT INSTALLATION LOCATION**

NOTE: Prior to Installation:

Before installing the outdoor unit, you must choose an appropriate location. The following are standards that will help you choose an appropriate location for the unit.

Proper installation locations must meet the following standards:

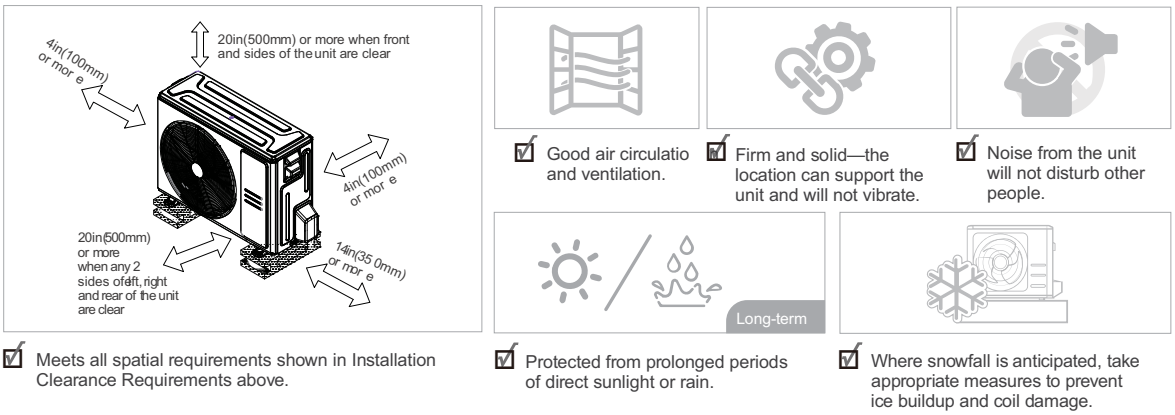

Fig. 8 —Installation Location Standards

NOTE: Install the unit by following local codes and regulations. They may differ slightly between different regions.

DO NOT install unit in the following locations:

- **Near an obstacle that will block air inlets and outlets.**
- **Near a public street, crowded areas, or where noise from the unit will disturb others.**
- **Near animals or plants that will be harmed by hot air discharge.**
- **Near any source of combustible gas.**
- **In a location that is exposed to large amounts of dust**
- **In a location exposed to a excessive amounts of salty air.**

2. **INSTALL DRAIN JOINT**

NOTE: Prior to Installation:

Before bolting the outdoor unit in place, you must install the drain joint at the bottom of the unit.

For units with a built-in base pan with multiple holes for proper drainage during defrost, there is no need to install the joint.

Step A:

Find the Base Pan Hole of the Outdoor Unit

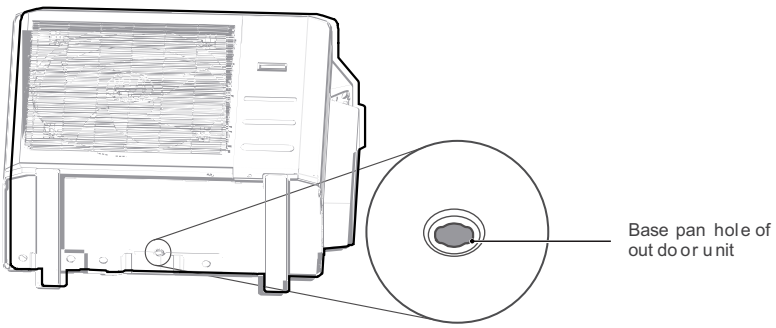

Fig. 9 —Find Base Pan Hole

Step B:

1. Fit the rubber seal on the end of the drain joint that will connect to the outdoor unit.
2. Insert the drain joint into the hole in the base pan of the unit. The drain joint will click in place.
3. Connect a drain hose extension (not included) to the drain joint to redirect water from the unit during heating mode.

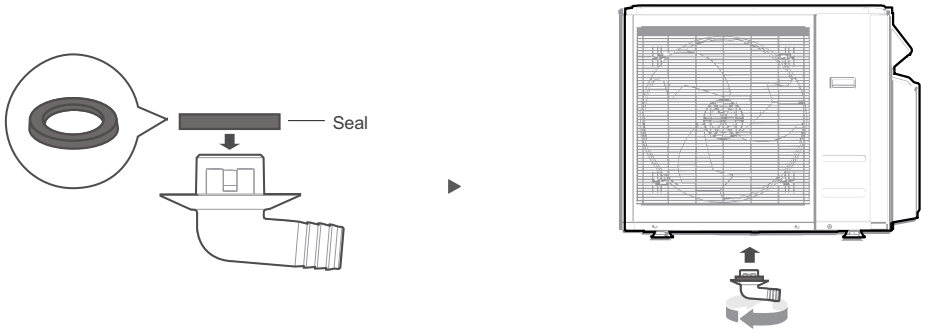

Fig. 10 —Connect Drain Hose to Drain Joint

CAUTION

IN COLD CLIMATES

In cold climates, make sure that the drain hose is as vertical as possible to ensure swift water drainage. If water drains too slowly, it can freeze in the hose and flood the unit.

3. ANCHOR THE OUTDOOR UNIT

WARNING

When drilling into concrete, eye protection is recommended at all times.

The outdoor unit can be anchored to the ground or to a wall-mounted bracket with bolt(M10).

The following is a list of different outdoor unit sizes and the distance between their mounting feet.

Prepare the installation base of the unit according to the dimensions below.

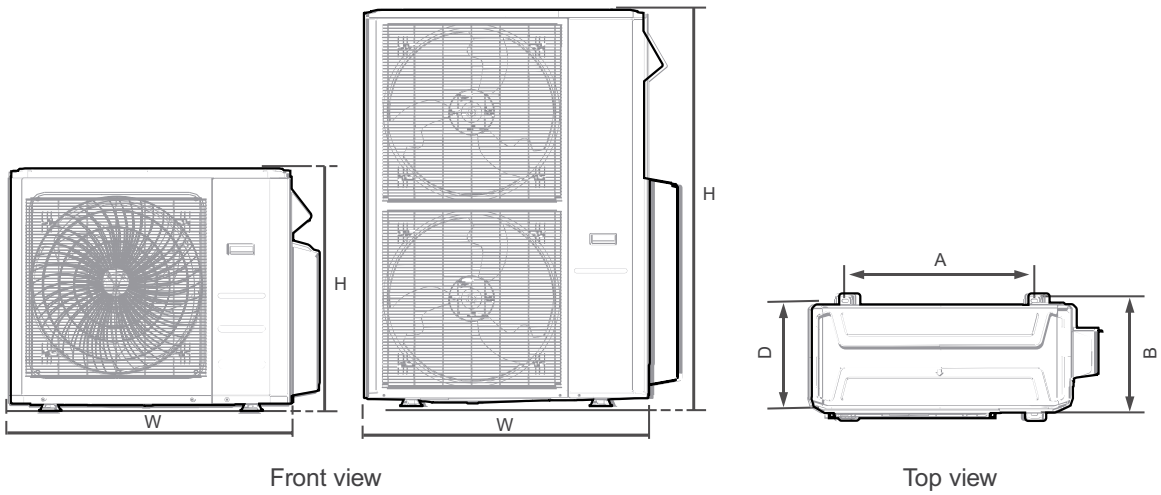

Fig. 11 —Outdoor Unit Types and Specifications (Split Type Outdoor Unit)

Table 11 — Dimensions

OUTDOOR UNIT SIZE	OUTDOOR UNIT DIMENSIONS WxHxD	MOUNTING DIMENSIONS	
		Distance A	Distance B
27K and 36K	37.2inx31.9inx16.14in (946mmx810mmx410mm)	26.5in (673mm)	15.87in (403mm)
48K	37.5inx52.5inx16.34in (952mmx1333mmx415mm)	24.96in (634mm)	15.9in (404mm)
18K	35.0inx 26.5inx 13.5in (890mmx673mmx342mm)	26.1in (663mm)	13.9in (354mm)

INSTALLING MULTIPLE UNITS

When installing multiple indoor units with a single outdoor unit, ensure that the length of the refrigerant pipe and the drop height between the indoor and outdoor units meet the requirements illustrated in the following diagram:

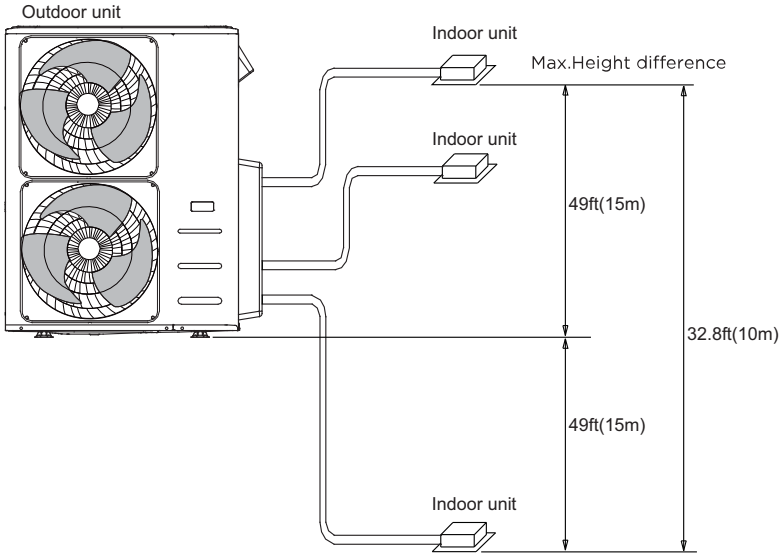

Fig. 12 —Installing Multiple Indoor Units

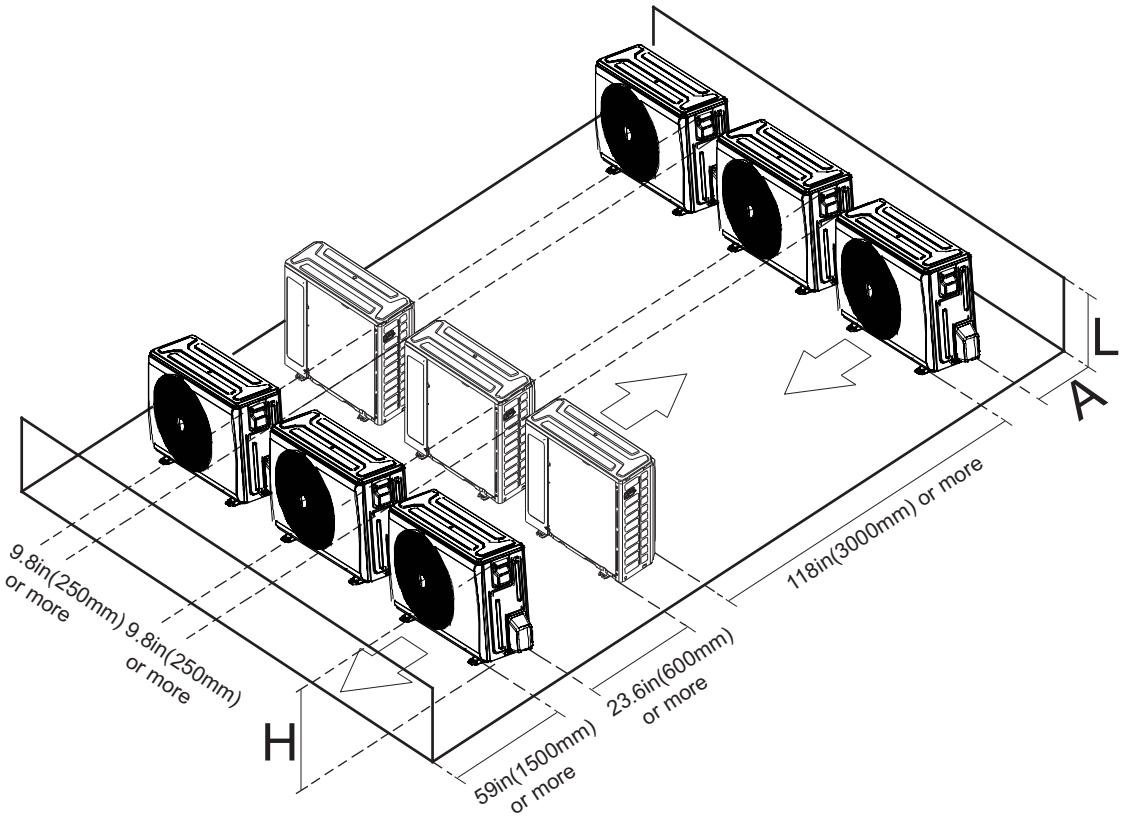

Fig. 13 —Rows of Series Installation

Table 12 — Relations Between H, A and L

	L	A
L ≤ H	L ≤ 1/2H	9.8in(250mm) or more
	1/2H < L ≤ H	11.8in(300mm) or more
L > H	Cannot be installed	

NOTES ON DRILLING HOLE IN WALL

You must drill a hole in the wall for the refrigerant piping and the signal cable that will connect the indoor and outdoor units.

1. Determine the location of the wall hole based on the location of the outdoor unit.
2. Using a 2.5in (65mm) core drill to drill the hole in the wall.

NOTE: When drilling the wall hole, make sure to avoid wires, plumbing, and other sensitive components.

3. Place the protective wall cuff in the hole. This protects the edges of the hole and helps seal it when you finish the installation process.

REFRIGERANT PIPING

Use the following steps to connect the refrigerant piping:

1. Run the interconnecting piping from the outdoor unit to the indoor unit.
2. Connect the refrigerant piping and drain line outside the indoor unit. Complete the pipe insulation at the flare connection then fasten the piping and wiring to the wall as required. Completely seal the hole in the wall.
3. Cut tubing to the correct length.

   When preparing refrigerant pipes, take extra care to cut and flare them properly. This ensures efficient operation and minimizes the need for future maintenance.

   a. Measure the distance between the indoor and outdoor units.
   b. Using a pipe cutter, cut the pipe a little longer than the measured distance.
   c. Make sure the pipe is cut at a perfect 90° angle.

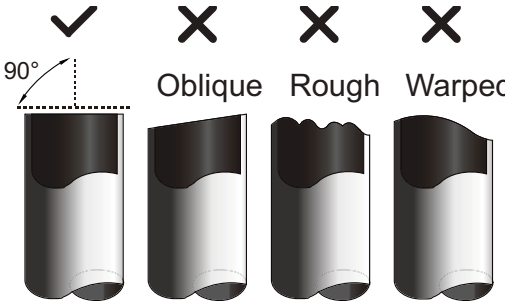

Fig. 14 —Pipe Cutting

CAUTION

DO NOT DEFORM PIPEWHILE CUTTING

Be extra careful not to damage, dent, or deform the pipe while cutting. This will drastically reduce the heating

4. Remove Burrs

   Burrs can affect the air-tight seal of the refrigerant piping connection. Therefore, they must be completely removed.

   To remove:

   a. Hold the pipe at a downward angle to prevent burrs from falling into the pipe.
   b. Using a reamer or deburring tool, remove all burrs from the cut section of the pipe.

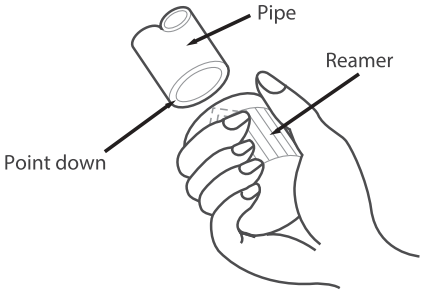

Fig. 15 —Deburring Tool

5. Flare Pipe Ends

   Proper flaring is essential to achieving an airtight seal.

   a. After removing the burrs from the cut pipe, seal the ends with PVC tape to prevent foreign materials from entering the pipe.
   b. Sheath the pipe with insulating material
   c. Place factory flare nut on pipe facing the proper direction. Make sure they are facing the right direction. Once the ends are flared, it is impossible to put them on or change their direction.

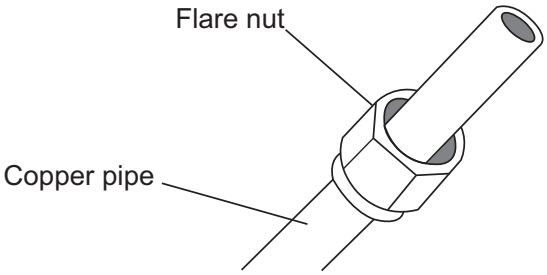

Fig. 16 —Copper Pipe and Flare Nut

d. Remove the PVC tape from ends of pipe when ready to perform the flaring work.

e. Clamp the flare block on the end of the pipe. The end of the pipe must extend beyond the flare form.

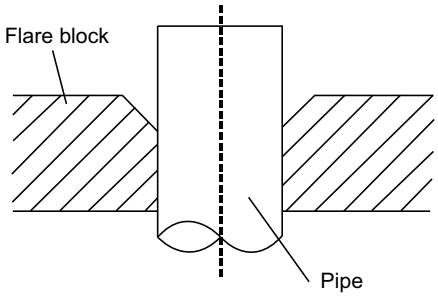

Fig. 17 —Flare Block

f. Place the flaring tool onto the form.

g. Turn the handle of the flaring tool clockwise until the pipe is fully flared. Flare the pipe in accordance with the dimensions in Table 13.

Table 13 — Flare Nut Spacing

OUTER DIAMETER IN (MM)	A" IN (MM)	
	MIN.	MAX.
Ø 1/4in (Ø 6.35mm)	0.0275in (0.7mm)	0.05in (1.3mm)
Ø 3/8in (Ø 9.52mm)	0.04in (1.0mm)	0.063in (1.6mm)
Ø1/2in (Ø 12.7mm)	0.04in (1.0mm)	0.07in (1.8mm)
Ø 5/8in (Ø 16mm)	0.078in (2.0mm)	0.086in (2.2mm)
Ø 3/4in (Ø 19mm)	0.078in (2.0mm)	0.094in (2.4mm)

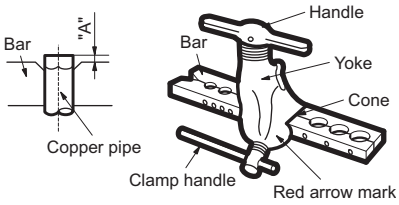

Fig. 18 —Flare Nut Spacing

h. Remove the flaring tool and flare block, then inspect the end of the pipe for cracks and even flaring.

6. Connect the Pipes

   Connect the copper pipes to the indoor unit first, then connect the pipes to the outdoor unit. Connect the low-pressure pipe first, then connect the high pressure pipe.

   a. Align the center of the two pipes that you will connect.

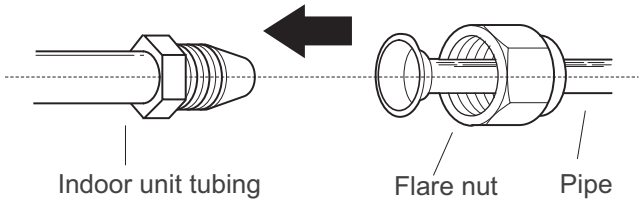

Fig. 19 —Align Center of the Two Pipes

   b. Tighten the flare nut as much as possible by hand.
   c. Using a wrench, grip the nut on the unit tubing.
   d. While firmly gripping the nut, use a torque wrench to tighten the flare nut according to the torque values listed in Table 11.

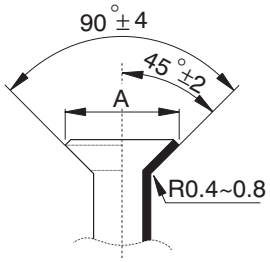

Fig. 20 —Flare Shape

Table 14 — Tightening Torque

BRASS FLARE SIZES	RECOMMENDED SEATING TORQUE FOR BRASS FLARE NUTS		FLARE DIMENSIONS (A) (INCH/MM)	
In (mm)	Ft-Lbs	N-M	Min	Max
Ø1/4 (6.35)	13.3-14.7	18-20	0.33/8.4	0.34/8.7
Ø3/8 (9.52)	23.6-28.8	32-39	0.52/13.2	0.53/13.5
Ø1/2 (12.7)	36.1-42.8	49-59	0.64/16.2	0.65/16.5
Ø5/8 (16)	42-52.4	57-71	0.76/19.2	0.78/19.7
Ø3/4 (19)	49.4-74.5	67-101	0.91/23.2	0.93/23.7
Ø7/8 (22)	62.7-81.1	85-110	1.04/26.4	1.06/26.9

NOTE: Use both a backup wrench and a torque wrench when connecting or disconnecting pipes to or from the unit.

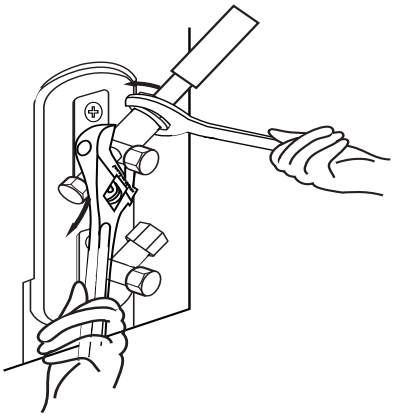

Fig. 21 —Torque Wrench with Backup Wrench

CAUTION

Wrap insulation around the piping. Direct contact with the bare piping may result in burns or frostbite. Ensure the pipe is properly connected. Over tightening may damage the bell mouth and under tightening may lead to leakage.

All tubing bends should be performed with a properly sized tubing bender to prevent kinking or damaging the tubing.

e. After connecting the copper pipes to the indoor unit, wrap the power cable, signal cable and the piping together with binding tape.

NOTE: While bundling these items together, DO NOT intertwine or cross the signal cable with any other wiring.

f. Thread this lineset through the wall and connect it to the outdoor unit.
g. Insulate all piping, including the outdoor unit valves.

NOTE: DO NOT open the service valves until pressure test is complete.

7. Pressure Test Piping

CAUTION

Only use Dry Nitrogen to pressure test refrigerant systems. Use of other gases can result in injury, property damage or death.

NOTE: Use refrigeration gauges that are pressure rated for R454b refrigerant.

a. Attach low side gauge hose to the 5/16” Schrader valve on the outdoor unit service valve.
b. Attach the charging hose to the regulator on the dry nitrogen tank.
c. Preset the nitrogen regulator to 550 psi.
d. Slowly pressurize the line set until the low side gauge reads 500 psi. Do not exceed 550 psi.
e. Close all the valves on the nitrogen tank and gauges.
f. Allow the pressure test to stand for a minimum of 30 minutes.
g. If the pressure holds, release the nitrogen and proceed. Review “E. AIR EVACUATION” on page 29.

If the pressure goes down in the 30 minute delay, leak check the tubing and flare fittings to identify the source of the leak. Return to Step C, above.

WIRING

WIRING PRECAUTIONS

WARNING

BEFORE PERFORMING ANY ELECTRICAL WORK, READ THE FOLLOWING WARNINGS.

WARNING

To avoid getting an electric shock, never touch the electrical components soon after the power supply has been turned off. After turning off the power, always wait 10 minutes or more before you touch the electrical components.

- All wiring must comply with local and national electrical codes, regulations and must be installed by a licensed electrician.
- All electrical connections must be made according to the Electrical Connection Diagramlocated on the panels of the indoor and outdoor units.
- If there is a serious safety issue with the power supply, stop work immediately. Explain your reasoning to the client, and refuse to install the unit until the safety issue is properly resolved.
- Power voltage should be within 90-110 of rated voltage. Insufficient power supply can cause malfunction, electrical shock, or fire.
- Installation of an external surge suppressor at the outdoor disconnect is recommended.
- If connecting power to fixed wiring, a switch or circult breaker that disconnects all poles and has a contact separation of at least 1/8in (3mm) must be incorporated in the fixed wiring. The qualified technician must use an approved circuit breaker or switch.
- Only connect the unit to an individual branch circuit. Do not connect another appliance to that outlet.
- Make sure to properly ground the air conditioner.
- Every wire must be firmly connected. Loose wiring can cause the terminal to overheat, resulting in product malfunction and possible fire.
- Do not let wires touch or rest against refrigerant tubing, the compressor, or any moving parts within the unit.
- If the unit has an auxiliary electric heater, it must be installed at least 40in (1m) away from any combustible materials.
- To avoid getting an electric shock, never touch the electrical components soon after the power supply has been turned Off. After turning off the power, always wait 10 minutes or more before you touch the electrical components.
- Make sure that you do not cross your electrical wiring with your signal wiring. This may cause distortion, interference or possibly damage to circuit boards.
- No other equipment should be connected to the same power circuit.
- Connect the outdoor wires before connecting the indoor wires.

WARNING

BEFORE PERFORMING ANY ELECTRICAL OR WIRING WORK, TURN OFF THE MAIN POWER TO THE SYSTEM.

NOTE ON CIRCUIT BREAKER: When the maximum current of the unit is more than 16A, a circuit breaker or leakage protection switch with protective device shall be used (purchased separately). When the maximum current of the air conditioner is less than 16A, the power cord of air conditioner shall be equipped with plug (purchased separately). The unit should be wired according to NEC and CEC requirements.

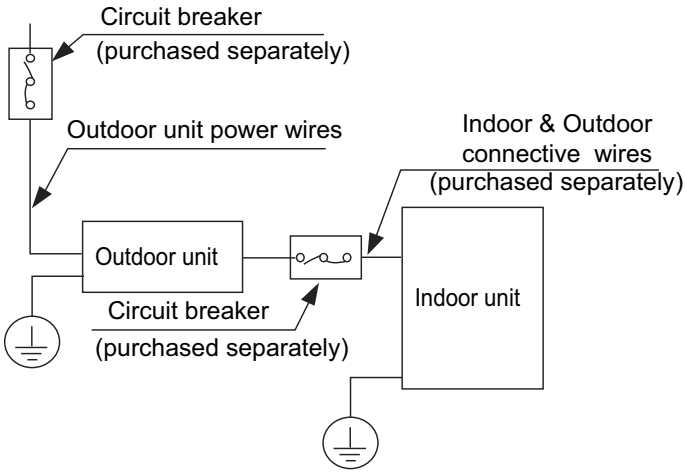

Fig. 22 —Circuit Breaker Wiring

NOTE: The figures are for explanation purpose only. The shape of your unit may be slightly different.

OUTDOOR UNIT WIRING

WARNING

BEFORE PERFORMING ANY ELECTRICAL OR WIRING WORK, TURN OFF THE MAIN POWER TO THE SYSTEM.

1. Prepare the cable for connection.
   a. First choose the right cable size.

NOTE: Choose the cable type according to the local electrical codes and regulations.

The size of the power supply cable, signal cable, fuse, and switch needed is determined by the maximum current of the unit. The maximum current is indicated on the nameplate located on the side panel of the unit. Refer to this nameplate to choose the right cable, fuse, or switch. For signal wire between the outdoor and indoor circuits, use 14/3 stranded copper wire or 14/3 shielded cable with installations where high EMF is detected.

NOTE: Choose the right cable size according to the Minimum Circuit Ampacity indicated on the nameplate of the unit.

   b. Using wire strippers, strip the rubber jacket from both ends of the signal cable to reveal approximately 5.9in (150mm) of wire.
   c. Strip the insulation from the ends.
   d. Using a wire crimper, crimp u-lugs on the ends.

NOTE: When connecting the wires, strictly follow the wiring diagram found inside the electrical box cover.

2. Remove the electric cover of the outdoor unit. If there is no cover on the outdoor unit, take off the bolts from the maintenance board and remove the protection board.

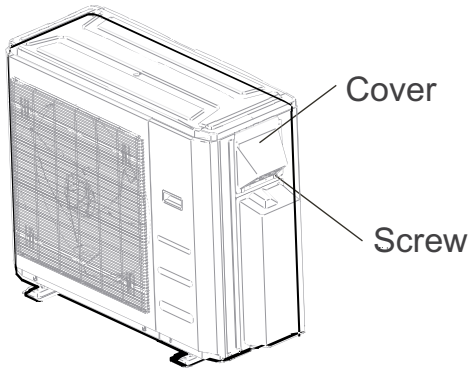

Fig. 23 —Remove Electrical Cover

3. Connect the u-lugs to the terminals. Match the wire colors/labels with the labels on the terminal block. Firmly screw the u-lug of each wire to its corresponding terminal.
4. Clamp down the cable with the cable clamp.
5. Insulate unused wires with electrical tape. Keep them away from any electrical or metal parts.
6. Reinstall the cover of the electric control box.

WIRING DIAGRAMS

CAUTION

Connect the connective cables to the terminals, as identified, with their matching numbers on the terminal block of the indoor and outdoor units. For example, Terminal L1(A) of the outdoor unit must connect with terminal L1/1 on the indoor unit. The outdoor unit can match different types of indoor unit, the numbers on the terminal block of the indoor unit may be slightly different. Pay special attention while connecting the wire.

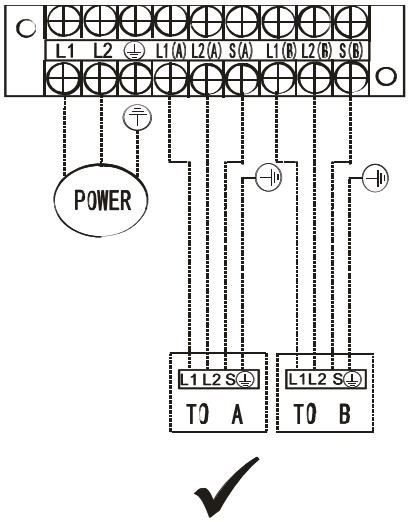

Fig. 24 —Wiring 1

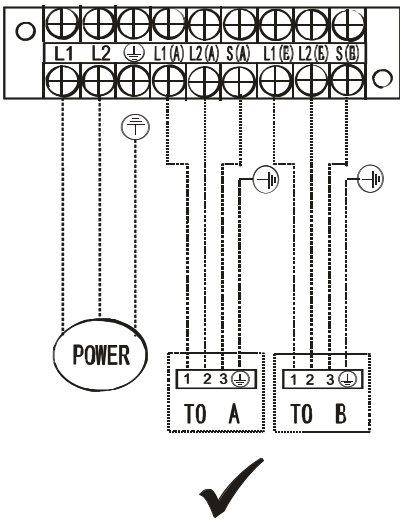

Fig. 25 —Wiring 2

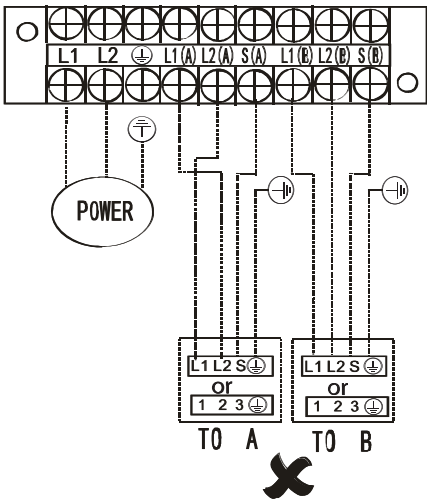

Fig. 26 —Wiring 3

---- This symbol indicates field wiring.

TERMINAL CONNECTIONS

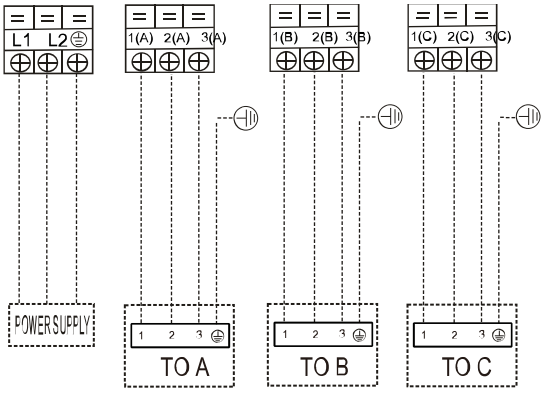

Fig. 27 —18K

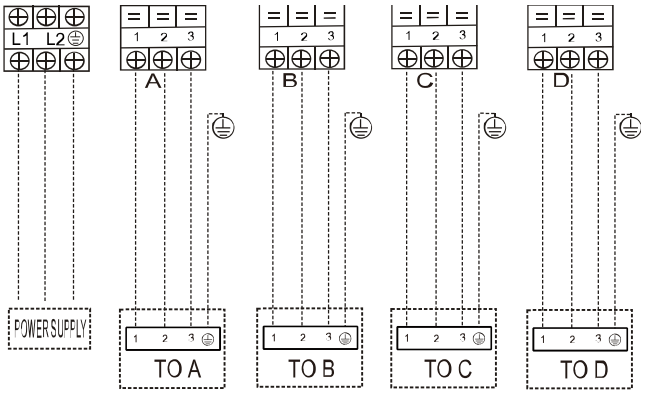

Fig. 28 —27K

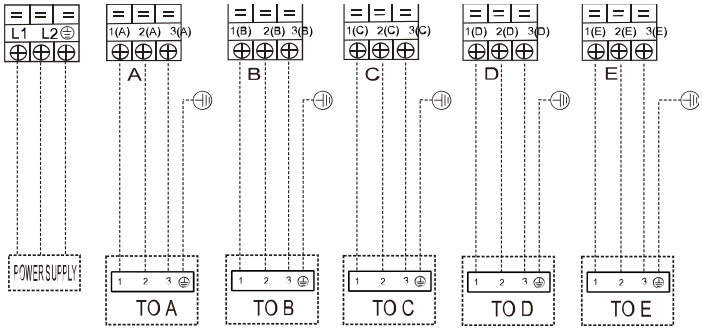

Fig. 29 —36K

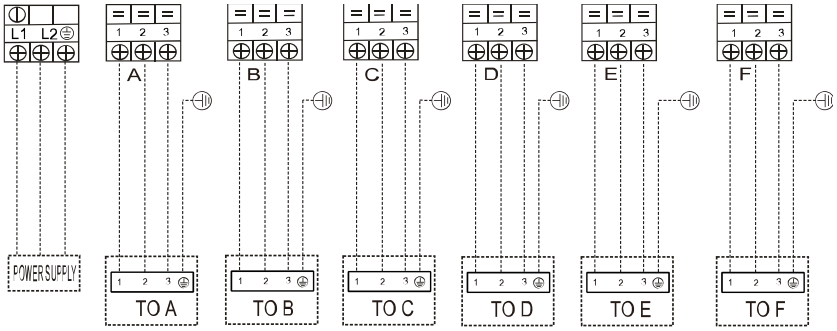

Fig. 30 —48K

AIR EVACUATION

NOTE: When opening valve stems, turn the hexagonal wrench until it hits against the stopper. Do not try to force the valve to open further.

PREPARATION AND PRECAUTION

Air and foreign matter in the refrigerant circuit can cause abnormal rises in pressure, which can damage the air conditioner, reduce its efficiency, and cause injury. Use a vacuum pump and manifold gauge to evacuate the refrigerant circuit, removing any non-condensable gas and moisture from the system. Evacuation should be performed upon initial installation and when unit is relocated.

BEFORE PERFORMING EVACUATION

- ☑ Check to make sure the connective pipes between the indoor and outdoor units are connected properly .
- ☑ Check to make sure all wiring is connected properly.

EVACUATION INSTRUCTIONS

1. You can choose to evacuate all indoor unit systems directly through the main valve, which requires opening all branch valves of connected indoor units, or evacuate each indoor unit system sequentially through the corresponding branch valve, which requires opening the main valve.
2. Connect the charge hose of the manifold gauge to the service port on the outdoor unit's low pressure valve.
3. Connect another charge hose from the manifold gauge to the vacuum pump.
4. Open the Low Pressure side of the manifold gauge. Keep the High Pressure side closed.

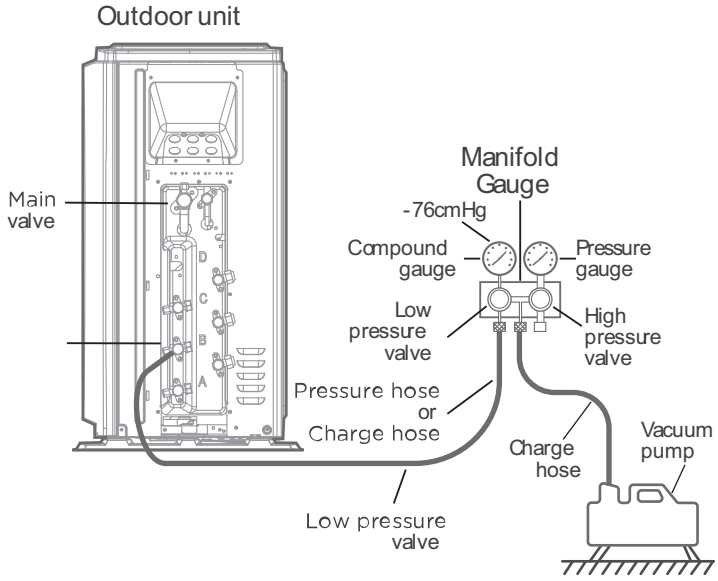

Fig. 31 —Evacuation Instructions - Outdoor Unit

5. Turn on the vacuum pump to evacuate the system.
6. Run the vacuum for at least 15 minutes when choosing evacuation from each branch valve, or until the Compound Meter reads -76cmHG (-105Pa). When choosing evacuation through the main valve, run the vacuum for at least 30 minutes.
7. Close the Low Pressure side of the manifold gauge, and turn off the vacuum pump.
8. Wait for 5 minutes, then check that there has been no change in system pressure.
9. If there is a change in system pressure, refer to Gas Leak Check section for information on how to check for leaks. If there is no change in system pressure, unscrew the cap from the packed valve (high pressure valve).
10. Insert hexagonal wrench into the packed valve (high pressure valve) and open the valve by turning the wrench in a 1/4 counterclockwise turn. Listen for gas to exit the system, then close the valve after 5 seconds.
11. Watch the Pressure Gauge for one minute to make sure that there is no change in pressure. The Pressure Gauge should read slightly higher than atmospheric pressure.
12. Remove the charge hose from the service port.

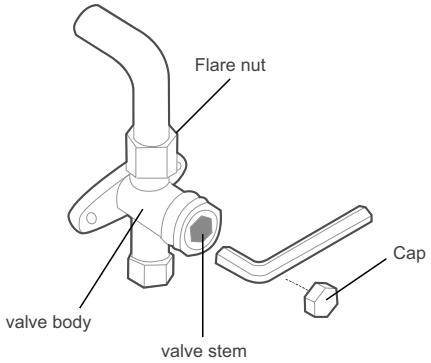

Fig. 32 —Evacuation Instructions

13. Using hexagonal wrench, fully open both the high pressure and low pressure valves.
14. Tighten valve caps on all three valves (service port, high pressure, low pressure) by hand. You may tighten it further using a torque wrench if needed.

NOTE ON ADDING REFRIGERANT

CAUTION

- Refrigerant charging must be performed after wiring, vacuuming, and the leak testing.
- DO NOT exceed the maximum allowable quantity of refrigerant or overcharge the system. Doing so can damage the unit or impact it's functioning.
- Charging with unsuitable substances may cause explosions or accidents. Ensure that the appropriate refrigerant is used.
- Refrigerant containers must be opened slowly. Always use protective gear when charging the system.
- DO NOT mix refrigerants types.

Depending on the length of connective piping or the pressure of the evacuated system, you made need to add refrigerant. Refer to table below for refrigerant amounts to be added:

Table 15 — Refrigerant Piping

	D5CMTAH18CAK	D5CMTAH27DAK	D5CMTAH36EAK	D5CMTAH48FAK
Max. number of indoor units	3	4	5	6
Max. length for all rooms (ft/m)	197/60	262.5/80	262.5/80	262.5/80
Max. length per each indoor unit (ft/m)	98/30	115/35	115/35	115/35
Max. height difference between indoor and outdoor unit (ft/m)	49/15	49/15	49/15	49/15
Max. height difference between indoor units (ft/m)	33/10	33/10	33/10	33/10

Table 16 — Additional Refrigerant Per Pipe Length

CONNECTIVE PIPE LENGTH (M)		AIR PURGING METHOD	ADDITIONAL REFRIGERANT
Less than standard pipe length * N		Vacuum Pump	N/A
Greater than standard pipe length * N			Liquid Side: Ø 1/4 in (Ø 6.35) R-454B (Total pipe length - standard length * N) x0.16oz / ft (15g / m)
Add .16 Oz (15 g) of additional refrigerant for every foot (meter) of system piping over the standard length, per unit size as shown below			
18K	**27K**	**36K**	**48K**
73.8 ft (22.5 m)	98 ft (30 m)	123 ft (37.5 m)	147.6 ft (45.0 m)

SAFETY AND LEAKAGE CHECKS

ELECTRICAL SAFETY CHECK

Perform the electrical safety check after completing installation. Cover the following areas:

1. Insulated resistance
   The insulated resistance must be more than 2MΩ.
2. Grounding work
   After FINISHING grounding work, measure the grounding resistance by visual detection and using the grounding resistance tester. Make sure the grounding resistance is less than 4Ω.
3. Electrical leakage check (performing during test while unit is on)
   During a test operation after completed installation, the use the electroprobe and multimeter to perform an electrical leakage check. Turn off the unit immediately if leakage happens. Try and evaluate different solutions until the unit operates properly.

GAS LEAK CHECK

1. Soap water method:
   Apply a soap-water solution or a liquid neutral detergent on the indoor unit connection or outdoor unit connections with a soft brush to check for leakage of the connecting points of the piping. If bubbles emerge, the pipes are experiencing leakage.
2. Leak detector
   Use the leak detector to check for leakage.

FUNCTION OF AUTOMATIC WIRING/PIPING CORRECTION

More recent models now feature automatic correction of wiring/piping errors. Press the "check switch" on the outdoor unit PCB board for 5 seconds until the LED displays "CE”, indicating that this function is working, Approximately 5-10 minutes after the switch is pressed, the "CE" disappears, meaning that the wiring/piping error is corrected and all wiring/piping is properly connected.

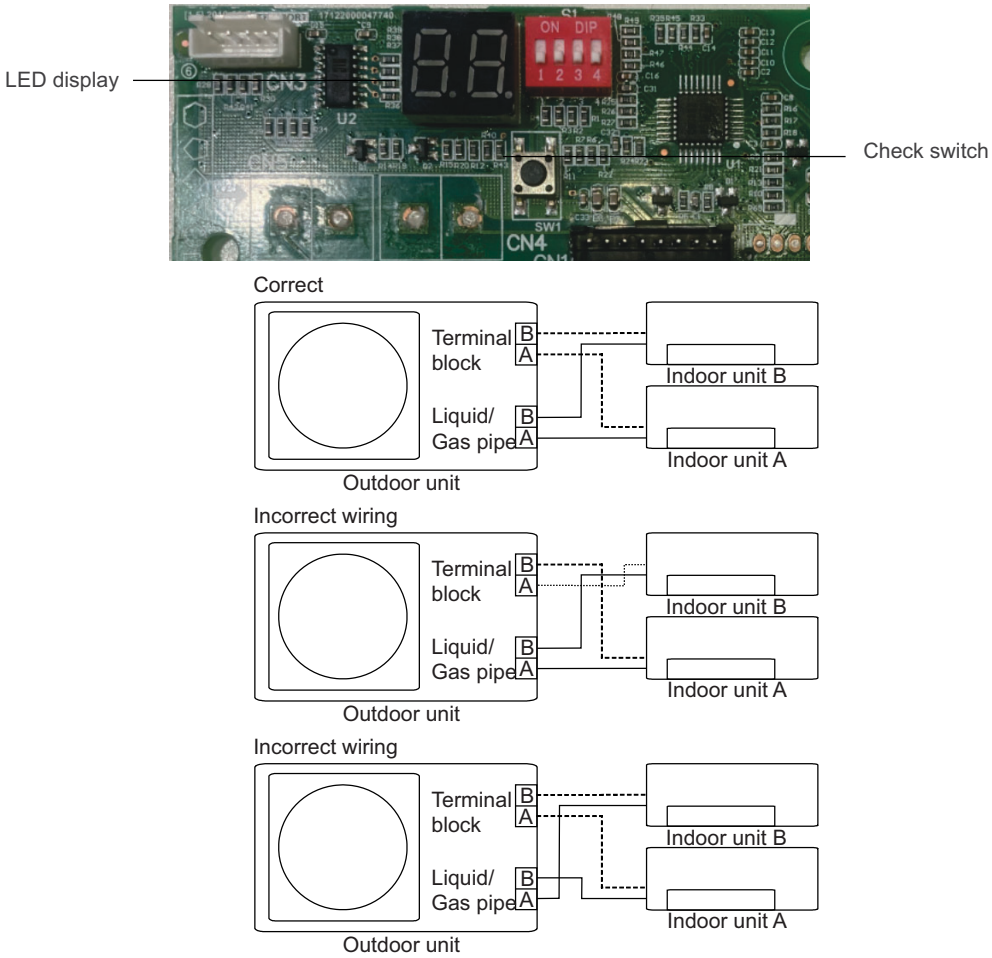

Fig. 33 —Automatic Wiring / Piping Correction Errors

To Activate This Function:

1. Check that outside temperature is above 41°F (5°C).
   This function does not work when outside temperature is not above 41°F (5°C)
2. Check that the stop valves of the liquid pipe and gas pipe are open.
3. Turn on the breaker and wait at least 2 minutes.
4. Press the check switch on the outdoor PCB board unit LED display "CE"

OPERATING CONDITIONS

When your air conditioner is used outside of the following temperature ranges, cer-tain safety protection features may activate and cause the unit to disable.

TEST RUN

⚠ CAUTION

Failure to perform the test run may result in unit damage, property damage, or personal injury.

BEFORE TEST RUN

A test run must be performed after the entire system has been completely installed. Confirm the following points before performing the test:

1. Indoor and outdoor units are properly installed.
2. Piping and wiring are properly connected.
3. No obstacles near the inlet and outlet of the unit that might cause poor performance or product malfunction.
4. Refrigeration system does not leak.
5. Drainage system is unimpeded and draining to a safe location.
6. Heating insulation is properly installed.
7. Grounding wires are properly connected.
8. Length of the piping and additional refrigerant capacity have been recorded.
9. Power voltage is the correct voltage for the air conditioner

TEST RUN INSTRUCTIONS

1. Open both the liquid and gas stop valves.
2. Turn on the main power switch and allow the unit to warm up.
3. Set the air conditioner to COOL mode.
4. For the Indoor Unit
   a. Ensure the remote control and its buttons work properly.
   b. Ensure the louvers move properly and can be changed using the remote control.
   c. Double check to see if the room temperature is being registered correctly.
   d. Ensure the indicators on the remote control and the display panel on the indoor unit work properly.
   e. Ensure the manual buttons on the indoor unit works properly.
   f. Check to see that the drainage system is unimpeded and draining smoothly.
   g. Ensure there is no vibration or abnormal noise during operation.
5. For the Outdoor Unit
   a. Check to see if the refrigeration system is leaking.
   b. Make sure there is no vibration or abnormal noise during operation.
   c. Ensure the wind, noise, and water generated by the unit do not disturb your neighbors or pose a safety hazard.
6. Drainage Test
   a. Ensure the drainpipe flows smoothly. New buildings should perform this test before finishing the ceiling.
   b. Remove the test cover. Add 2,000ml of water to the tank through the attached tube.
   c. Turn on the main power switch and run the air conditioner in COOL mode.
   d. Listen to the sound of the drain pump to see if it makes any unusual noises.
   e. Check to see that the water is discharged. It may take up to one minute before the unit begins to drain depending on the drainpipe.
   f. Make sure that there are no leaks in any of the piping.
   g. Stop the air conditioner. Turn off the main power switch and reinstall the test cover.

NOTE: If the unit malfunctions or does not operate according to your expectations, please refer to the Troubleshooting section of the Owner's Manual before calling customer service.

PACKING AND UNPACKING THE UNIT

UNPACKING OUTDOOR UNIT

1. Cut the packing belt.
2. Take the unit out of the package.
3. Remove the foam from the unit.
4. Remove the packing film from the unit.

PACKING OUTDOOR

1. Put the outdoor unit into the packing film.
2. Put the bottom foam into the box.
3. Put the outdoor unit into the package, then put the upper packaging foam on the unit.
4. Close the package and seal it.
5. Using the packing belt if necessary.

NOTE: Keep all packaging items if you may need in the future.

Manufacturer reserves the right to change, at any time, specifications and designs without notice and without obligations.

ERROR CODES

For ease of service, the systems are equipped with diagnostic code display LEDs on both the indoor and outdoor units. The outdoor diagnostic display has one red LED on the outdoor unit board and is limited to very few errors. The indoor diagnostic display is a combination of flashing LEDs on the display panel or the front of the unit.

There may be a few error codes displayed in the indoor unit that might relate to the outdoor unit's problems. If possible, always check the diagnostic codes displayed on the indoor unit first.

Table 17 — Error Codes

DISPLAY	MALFUNCTION AND PROTECTION INDICATION
EC07	ODU fan speed out of control
EC0d	ODU malfunction
EC51	ODU EEPROM parameter error
EC52	ODU coil temp sensor error
EC53	ODU ambient temp sensor error
EC54	COMP. discharge temp sensor error
EC56	IDU coil outlet temp sensor error
ECC1	Other IDU refrigerant sensor detects leakage (multi-zone)
EH00	IDU EEPROM malfunction
EH03	IDU fan speed out of control
EH0A	IDU EEPROM parameter error
EH0b	IDU main control and display boards communication error
EH0E	Water-level alarm malfunction
EH3A	External fan DC bus voltage is too low protection
EH3b	External fan DC bus voltage is too high fault
EH60	IDU room temp. sensor (T1) error
EH61	IDU coil temp. sensor (T2) error
EH62/ EH66	Evaporator coil inlet temp. sensor (T2B) is in open circuit or short circuit
EH65	Evaporator coil inlet temp. sensor (T2A) is in open ciruit or short circuit
EHbA	Communication error between indoor unit and external fan module
EHb3	Communication malfunction between wire and master control
EHC1	Refrigerant sensor detects leakage
EHC2	Refrigerant sensor is out of range and leakage is detected
EHC3	Refrigerant sensor is out of range
EL01	IDU & ODU communication error
EL0C	System lacks refrigerant
EL16	Communication malfunction between adapter board and outdoor main board
FHCC	Refrigerant sensor error
FL09	Mismatch between the new and old platforms
PC00	ODU IPM module protection
PC01	ODU voltage protection
PC02	Compressor top (or IPM) temp. protection
PC03	Pressure protection (low or high pressure)
PC04	Inverter compressor drive error
PC0L	Low ambient temp. protection
----	IDUs mode conflict
NOTE: The digital tube will show DF in defrost mode and FC in forced cooling mode. DF and FC are not error codes.	

DUCTLESS START-UP CHECKLIST - Multi Zone

Installation Data

Site Address:_____

City:_____ **State:**_____ **Zip Code:**_____

Installing Contractor:_____ **Contractor Contact #:** ( ) _____-_____

Job Name:_____ **Start-up Date:**_____

Distributor:_____

System Details

UNITS	MODEL NO.	SERIAL NO.	CONTROLLER
OUTDOOR UNIT			
INDOOR UNIT A			
INDOOR UNIT B			
INDOOR UNIT C			
INDOOR UNIT D			
INDOOR UNIT E			
INDOOR UNIT F			

Are the outdoor unit and indoor unit compatible? YES:_____ NO:_____

Wiring Electrical

Wire Size and Type Used? AWG:_____ TYPE:_____

Are there any breaks, splices, wire nuts or butt connectors between the outdoor unit and the indoor unit? YES:_____ NO:_____

Was the wiring from the outdoor unit port to the correct indoor unit verified? YES:_____ NO:_____

REMARKS:_____

_____

Voltage Check

Wiring: Multi-Zone

Outdoor Unit Disconnect	1(L1):GND		Outdoor Unit Terminal Block	1(L1):GND		NOTES:_____		
	2(L2):GND			2(L2):GND				
	1(L1):2(L2)			1(L1):2(L2)				
Port A	1(L1):GND		Port B	1(L1):GND		Port C	1(L1):GND	
	2(L2):GND			2(L2):GND			2(L2):GND	
	1(L1):2(L2)			1(L1):2(L2)			1(L1):L2(2)	
	2(L2):3(S)			2(L2):3(S)			2(L2):3(S)	
Port D	1(L1):GND		Port E	1(L1):GND		NOTES:_____		
	2(L2):GND			2(L2):GND				
	1(L1):2(L2)			1(L1):2(L2)				
	2(L2):3(S)			2(L2):3(S)				
Indoor Unit Voltage Check @ Indoor Unit A	1(L1):GND		Indoor Unit Voltage Check @ Indoor Unit B	1(L1):GND		Indoor Unit Voltage Check @ Indoor Unit C	1(L1):GND	
	2(L2):GND			2(L2):GND			2(L2):GND	
	1(L1):2(L2)			1(L1):2(L2)			1(L1):2(L2)	
	2(L2):3(S)			2(L2):3(S)			2(L2):3(S)	
Indoor Unit Voltage Check @ Indoor Unit D	1(L1):GND		Indoor Unit Voltage Check @ Indoor Unit E	1(L1):GND		Port F	1(L1):GND	
	2(L2):GND			2(L2):GND			2(L2):GND	
	1(L1):2(L2)			1(L1):2(L2)			1(L1):L2(2)	
	2(L2):3(S)			2(L2):3(S)			2(L2):3(S)	

NOTE: Power needs to be verified from each leg to the ground as well as leg to leg.

Manufacturer reserves the right to change, at any time, specifications and designs without notice and without obligations.

Ductless Start-Up Checklist (CONT)

Piping

Leak Check:

System held 500 psig (max. 550psi) for a minimum of 30 minutes using dry nitrogen. YES:_____ NO:_____

Evacuation Method:

- Was the Triple Evacuation Method used as outlined in the installation manual? YES:_____ NO:_____
- Was the Deep Vacuum Method used as outlined in the installation manual? YES:_____ NO:_____
- Did the System Hold 500 microns for 1 hour? YES:_____ NO:_____
- Does the line set match the diameter of the evaporator connections? YES:_____ NO:_____
- For Conventional Fan Coils, does the line set match the outdoor unit size? YES:_____ NO:_____

Multi-Zone Piping:

Are the service ports open? YES:_____ NO:_____

Check that the piping is not crossed. Turn on one indoor unit at a time and observe if the EEV is opening on the correct port.

NOTE: _____

_____

PORT	LIQUID SIZE		SUCTION SIZE		LENGTH	CHARGE
A						
B						
C						
D						
E						
F						
					TOTAL CHARGE:	

NOTES:_____

Performance Check

Adjust the set-point of one indoor unit and allow 10 minutes of continuous operation before recording any values. Once all the values have been recorded, repeat the process for the remaining indoor unit(s) one at a time. Once complete, all the connected heads should operate.

(Operational data recorded on applicable heads with the wireless remote controller's Point Check function))

UNIT	SET-POINT	MODE	T1	T2	T3	T4	Tb	Tp	Th	LA/Lr
A										
B										
C										
D										
E										
F										

NOTE:

- T1 - Ambient Space Temperature Sensor
- T2 - IDU Coil Temperature Sensor
- T3 - Outdoor Coil Temperature Sensor
- T4 - Outdoor Ambient Temperature
- Tb - Suction Line Temperature @PMV
- Tp - Discharge Temperature Sensor
- Th - IPM Board Temperature
- LA/Lr - PMV Temperature

Error Codes

Were there any error codes present at start-up? YES:_____ NO:_____

Indoor Unit Error Code:		**Notes:**
Outdoor Unit Error Code:		
Wall Controller:		
24V Interface:		

Comments:

_____

_____

© 2024 Carrier. All rights reserved.

Manufacturer reserves the right to change, at any time, specifications and designs without notice and without obligations.