286B (2 - 5 TONS)
289B (2 - 5 TONS)
EVOLUTION™ SERIES 2-STAGE HEAT PUMP
WITH PURON® REFRIGERANT

bryant®

Installation Instructions

SAFETY CONSIDERATIONS

Improper installation, adjustment, alteration, service, maintenance, or use can cause explosion, fire, electrical shock, or other conditions which may cause death, personal injury, or property damage. Consult a qualified installer, service agency, or your distributor or branch for information or assistance. The qualified installer or agency must use factory-authorized kits or accessories when modifying this product. Refer to the individual instructions packaged with the kits or accessories when installing.

Follow all safety codes. Wear safety glasses, protective clothing, and work gloves. Use quenching cloth for brazing operations. Have fire extinguisher available. Read these instructions thoroughly and follow all warnings or cautions included in literature and attached to the unit. Consult local building codes and current editions of the National Electrical Code (NEC) NFPA 70. In Canada, refer to current editions of the Canadian electrical code CSA 22.1.

Recognize safety information. This is the safety-alert symbol ⚠ When you see this symbol on the unit and in instructions or manuals, be alert to the potential for personal injury. Understand these signal words; DANGER, WARNING, and CAUTION. These words are used with the safety-alert symbol. DANGER identifies the most serious hazards which **will** result in severe personal injury or death. WARNING signifies hazards which **could** result in personal injury or death. CAUTION is used to identify unsafe practices which **would** result in minor personal injury or product and property damage. NOTE is used to highlight suggestions which **will** result in enhanced installation, reliability, or operation.

⚠ WARNING

ELECTRICAL SHOCK HAZARD

Failure to follow this warning could result in personal injury or death.

Before installing, modifying, or servicing system, main electrical disconnect switch must be in the OFF position and install a lockout tag. There may be more than 1 disconnect switch. Lock out and tag switch with a suitable warning label.

⚠ CAUTION

CUT HAZARD

Failure to follow this caution may result in personal injury.

Sheet metal parts may have sharp edges or burrs. Use care and wear appropriate protective clothing and gloves when handling parts.

Indoor Thermostat Control Options

Model	Evolution Control	Standard 2–stage Thermostat
286B / 289B	Yes	Yes

INSTALLATION RECOMMENDATIONS

NOTE: In some cases noise in the living area has been traced to gas pulsations from improper installation of equipment.

1. Locate unit away from windows, patios, decks, etc. where unit operation sound may disturb customer.
2. Ensure that vapor and liquid tube diameters are appropriate for unit capacity.
3. Run refrigerant tubes as directly as possible by avoiding unnecessary turns and bends.
4. Leave some slack between structure and unit to absorb vibration.
5. When passing refrigerant tubes through the wall, seal opening with RTV or other pliable silicon-based caulk. (See Fig. 1.)
6. Avoid direct tubing contact with water pipes, duct work, floor joists, wall studs, floors, and walls.
7. Do not suspend refrigerant tubing from joists and studs with a rigid wire or strap which comes in direct contact with tubing.(See Fig. 1.)
8. Ensure that tubing insulation is pliable and completely surrounds vapor tube.
9. When necessary, use hanger straps which are 1 in. wide and conform to shape of tubing insulation. (See Fig. 1.)
10. Isolate hanger straps from insulation by using metal sleeves bent to conform to shape of insulation.

When outdoor unit is connected to factory-approved indoor unit, outdoor unit contains system refrigerant charge for operation with AHRI rated indoor unit when connected by 15 ft. (4.57 m) of field-supplied or factory accessory tubing. For proper unit operation, check refrigerant charge using charging information located on control box cover and/or in the Check Charge section of this instruction.

IMPORTANT: Maximum liquid-line size is 3/8-in. OD for all residential applications including long line applications.

IMPORTANT: Always install the factory-supplied liquid-line filter drier. Obtain replacement filter driers from your distributor or branch.

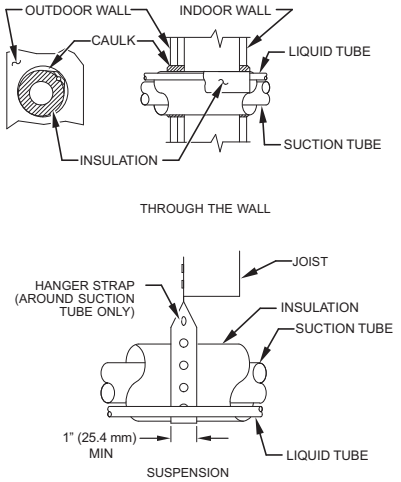

Fig. 1 - Connecting Tubing Installation

Specifications for this unit in residential new construction market require the outdoor unit, indoor unit, refrigerant tubing sets, metering device, and filter drier listed in presale literature. There can be no deviation. Consult the Service Manual – Air Conditioners and Heat Pumps Using Puron® Refrigerant to obtain required unit changes for specific applications and for R-22 retrofit.

Check Equipment and Job Site

Unpack Unit

Move to final location. Remove carton taking care not to damage unit.

Inspect Equipment

File claim with shipping company prior to installation if shipment is damaged or incomplete. Locate unit rating plate on unit corner panel. It contains information needed to properly install unit. Check rating plate to be sure unit matches job specifications.

Install on a Solid, Level Mounting Pad

If conditions or local codes require the unit be attached to pad, tie down bolts should be used and fastened through knockouts provided in unit base pan. Refer to unit mounting pattern in Fig. 2 to determine base pan size and knockout hole location.

For hurricane tie downs, contact distributor for details and PE (Professional Engineer)Certification, if required.

On rooftop applications, mount on level platform or frame. Place unit above a load-bearing wall and isolate unit and tubing set from structure. Arrange supporting members to adequately support unit and minimize transmission of vibration to building. Consult local codes governing rooftop applications.

Roof mounted units exposed to winds above 5 mph may require wind baffles. Consult the Service Manual - Residential Split System Air Conditioners and Heat Pumps Using Puron® Refrigerant for wind baffle construction.

NOTE: Unit must be level to within ±2° (±3/8 in./ft,±9.5 mm/m.)per compressor manufacturer specifications.

Clearance Requirements

When installing, allow sufficient space for airflow clearance, wiring, refrigerant piping, and service. Allow 24 in. (609.6 mm) clearance to service end of unit and 48 in. (1219.2 mm) (above unit. For proper airflow, a 6-in. (152.4 mm) clearance on 1 side of unit and 12-in. (304.8 mm) on all remaining sides must be maintained. Maintain a distance of 24 in. (609.6 mm) between units. Position so water, snow, or ice from roof or eaves cannot fall directly on unit.

On rooftop applications, locate unit at least 6 in. (152.4 mm) above roof surface.

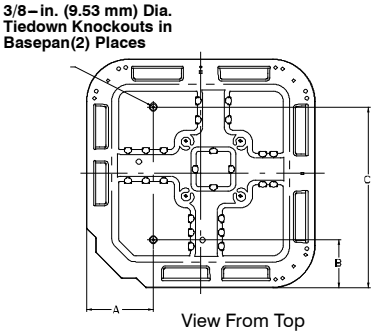

UNIT BASE PAN Dimension in. (mm)	TIEDOWN KNOCKOUT LOCATIONS in. (mm)		
	A	B	C
35 X 35 (889 X 889)	9–1/8 (231.8)	6–9/16 (166.7)	28–7/16 (722.3)

A05177

Fig. 2 - Tiedown Knockout Locations

Operating Ambient

The minimum outdoor operating ambient in cooling mode is 55°F (12.78°C) without low ambient cooling enabled, and the maximum outdoor operating ambient in cooling mode is 125°F (51.67°C). At line voltage of 208v (or below) and an outdoor ambient of 120°F (48.9°C) (and above), the compressor operates in low stage. On Evolution communicating systems, low ambient cooling operation is possible at ambient as low as 0°F (-17.78°C).

The maximum outdoor operating ambient in heating mode is 66°F (18.89°C) on all models.

Elevate Unit

⚠ CAUTION

UNIT OPERATION HAZARD

Failure to follow this caution may result in equipment damage or improper operation.

Do not allow water and/or ice to build up in base pan.

Elevate unit per local climate and code requirements to provide clearance above estimated snowfall level and ensure adequate drainage of unit.

⚠ CAUTION

UNIT OPERATION HAZARD

Failure to follow this caution may result in equipment damage or improper operation.

Locate the unit in such a way that it is stable in all circumstances including adverse weather conditions.

In Long-Line Applications, Install Liquid-Line Solenoid Valve (LSV)

For refrigerant piping arrangements with equivalent lengths greater than 80 ft. (24.38 m) and/or when elevation difference between indoor and outdoor unit is greater than ±20 ft. (±6.10 m), follow all requirements of the Residential Piping and Long-Line Guideline. If required by the Residential Piping and Long-Line Guideline, install LSV kit, part no. KHALS0401LLS, specifically designed for Puron® refrigerant heat pumps. LSV should be installed within 2 ft. (0.61 m) of outdoor unit with flow arrow pointing toward outdoor unit. Follow the Installation Instructions included with accessory kit.

IMPORTANT: Flow arrow must point toward outdoor unit.

Make Piping Connections

⚠ WARNING

PERSONAL INJURY AND UNIT DAMAGE HAZARD

Failure to follow this warning could result in personal injury or death.

Relieve pressure and recover all refrigerant before system repair or final unit disposal. Use all service ports and open all flow-control devices, including solenoid valves.

⚠ CAUTION

UNIT DAMAGE HAZARD

Failure to follow this caution may result in equipment damage or improper operation.

Do not leave system open to atmosphere any longer than minimum required for installation. POE oil in compressor is extremely susceptible to moisture absorption. Always keep ends of tubing sealed during installation.

⚠ CAUTION

UNIT DAMAGE HAZARD

Failure to follow this caution may result in equipment damage or improper operation.

If ANY refrigerant tubing is buried, provide a 6 in. vertical rise at service valve. Refrigerant tubing lengths up to 36 in. (914.4 mm) may be buried without further special consideration. Do not bury lines longer than 36 in. (914.4 mm).

Outdoor units may be connected to indoor section using accessory tubing package or field-supplied refrigerant grade tubing of correct size and condition. For tubing requirements beyond 80 ft. (24.38 m), substantial capacity and performance losses can occur. Following the recommendations in the Residential Piping and Long-Line Guideline will reduce these losses. Refer to Table 1 for field tubing diameters. Refer to Table 2 for accessory requirements.

Outdoor Unit Connected to Factory-Approved Indoor Unit

Outdoor unit contains correct system refrigerant charge for operation with factory-approved, AHRI-rated indoor unit with highest sales volume when connected by 15 ft. (4.57 m) of field-supplied or factory-accessory tubing, and factory-supplied filter drier. Check refrigerant charge for maximum efficiency.

NOTE: If the indoor furnace coil width is more than the furnace casing width, refer to the indoor coil Installation Instructions for transition requirements.

Table 1 – Refrigerant Connections and Recommended Liquid and Vapor Tube Diameters (in.)

UNIT SIZE	LIQUID	RATED VAPOR*	
	Connection & Max. Tube Diameter	Connection Diameter	Tube Diameter
024	3/8	3/4	3/4
036	3/8	7/8	7/8
048	3/8	7/8	1-1/8
060	3/8	7/8	1-1/8

* Units are rated with 25 ft. (7.6 m) of lineset. See Product Data sheet for performance data when using different size and length linesets.

Notes:
1. Do not apply capillary tube or fixed orifice indoor coils to these units.
2. For Tubing Set lengths between 80 and 200 ft. (24.38 and 60.96 m) horizontal or 20 ft. (6.1 m) vertical differential 250 ft. (76.2 m) Total Equivalent Length), refer to the Residential Piping and Longline Guide line– Air Conditioners and Heat Pumps using Puron refrigerant.

Table 2 – Accessory Usage

ACCESSORY	REQUIRED FOR LOW–AMBIENT COOLING APPLICATIONS (Below 55°F/12.8°C)	REQUIRED FOR LONG LINE APPLICATIONS*	REQUIRED FOR SEA COAST APPLICATIONS (Within 2 miles/3.22 km)
Compressor Start Assist	No	Yes	No
Crankcase Heater	Standard	Standard	Standard
Evaporator Freeze Protection	Standard with Evolution™ Control	No	No
Liquid–Line Solenoid Valve	No	Yes	No
Low–Ambient Control	Standard with Evolution Control	No	No
Puron Refrigerant Balance Port Hard–ShutOff TXV	Yes†	Yes†	Yes†
Support Feet	Recommended	No	Recommended

* For tubing set lengths between 80 and 200 ft. (24.38 and 60.96 m) horizontal or 20 ft. (6.10 m) vertical differential (total equivalent length), refer to the Long Line Guideline—Air Conditioners and Heat Pumps using Puron® Refrigerant.

† Required on all indoor units. Standard on all new Puron refrigerant fan coils and furnace coils.

Install Liquid-Line Filter Drier Indoor

⚠ WARNING

UNIT OPERATION AND SAFETY HAZARD

Failure to follow this warning could result in personal injury or equipment damage.

Puron® refrigerant systems operate at higher pressures than standard R-22 systems. Do not use R-22 service equipment or components on Puron® refrigerant equipment.

Refer to Fig. 3 and install filter drier as follows:

1. Braze 5-in. (127 mm) liquid tube to the indoor coil.
2. Wrap filter drier with damp cloth.
3. Braze filter drier to above 5-in. (127 mm) liquid tube. Flow arrow must point towards indoor coil.
4. Connect and braze liquid refrigerant tube to the filter drier.

⚠ CAUTION

UNIT DAMAGE HAZARD

Failure to follow this caution may result in equipment damage or improper operation.

Installation of filter drier in liquid line is required.

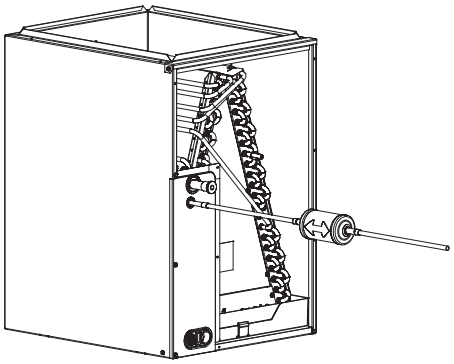

A05227

Fig. 3 - Liquid-Line Filter Drier

Refrigerant Tubing connection Outdoor

Connect vapor tube to fitting on outdoor unit vapor service valves (see Table 1).

Install Adapter Tube

1. Remove plastic retainer holding outdoor piston in liquid service valve.
2. Check outdoor piston size with matching number listed on unit rating plate.
3. Locate plastic bag taped to unit containing adapter tube.
4. Remove Teflon® washer from bag and install on open end of liquid service valve.
5. Remove adapter tube from bag and connect threaded nut to liquid service valve. Tighten nut finger tight and then with wrench tighten an additional 1/2 turn (15 ft-lb).
   DO NOT OVERTIGHTEN!

Sweat Connections

⚠ CAUTION

UNIT DAMAGE HAZARD

Failure to follow this caution may result in equipment damage or improper operation.

- Use a brazing shield
- Wrap service valves with wet cloth or heat sink material.

Use refrigerant grade tubing. Service valves are closed from factory and ready for brazing. After wrapping service valve with a wet cloth, braze sweat connections using industry accepted methods and materials. Consult local code requirements. Refrigerant tubing and indoor coil are now ready for leak testing. This check should include all field and factory joints.

Evacuate Refrigerant Tubing and Indoor Coil

⚠ CAUTION

UNIT DAMAGE HAZARD

Failure to follow this caution may result in equipment damage or improper operation.

Never use the system compressor as a vacuum pump.

Refrigerant tubes and indoor coil should be evacuated using the recommended deep vacuum method of 500 microns. The alternate triple evacuation method may be used. See Service Manual for triple evacuation method. Always break a vacuum with dry nitrogen.

Deep Vacuum Method

The deep vacuum method requires a vacuum pump capable of pulling a vacuum of 500 microns and a vacuum gauge capable of accurately measuring this vacuum depth. The deep vacuum method is the most positive way of assuring a system is free of air and liquid water. (See Fig. 4)

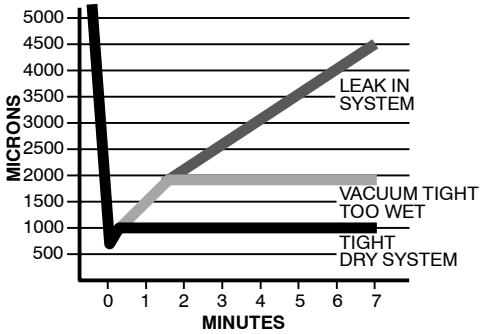

A95424

Fig. 4 - Deep Vacuum Graph

Final Tubing Check

IMPORTANT: Check to be certain factory tubing on both indoor and outdoor unit has not shifted during shipment. Ensure tubes are not rubbing against each other or any sheet metal. Pay close attention to feeder tubes, making sure wire ties on feeder tubes are secure and tight.

Make Electrical Connections

⚠ WARNING

ELECTRICAL SHOCK HAZARD

Failure to follow this warning could result in personal injury or death.

Do not supply power to unit with compressor terminal box cover removed.

Be sure field wiring complies with local and national fire, safety, and electrical codes, and voltage to system is within limits shown on unit rating plate. Contact local power company for correction of improper voltage. See unit rating plate for recommended circuit protection device.

NOTE: Operation of unit on improper line voltage constitutes abuse and could affect unit reliability. See unit rating plate. Do not install unit in system where voltage may fluctuate above or below permissible limits.

NOTE: Use copper wire only between disconnect switch and unit.

NOTE: Install branch circuit disconnect of adequate size per NEC to handle unit starting current. Locate disconnect within sight from and readily accessible from unit, per Section 440-14 of NEC.

Route Ground and Power Wires

Remove access panel to gain access to unit wiring. Extend wires from disconnect through power wiring hole provided and into unit control box.

⚠ WARNING

ELECTRICAL SHOCK HAZARD

Failure to follow this warning could result in personal injury or death.

The unit cabinet must have an uninterrupted or unbroken ground to minimize personal injury if an electrical fault should occur. The ground may consist of electrical wire or metal conduit when installed in accordance with existing electrical codes.

Connect Ground and Power Wires

Connect ground wire to ground connection in control box for safety. Connect power wiring to contactor as shown in Fig. 5.

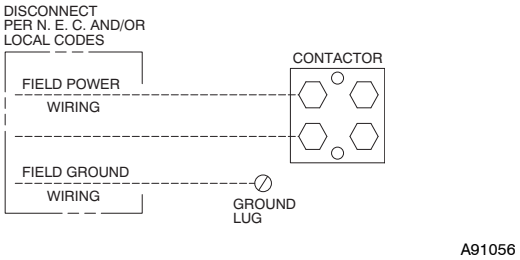

Fig. 5 - Line Power Connections

Connect Control Wiring

Route low voltage control wires through control wiring grommet and connect leads to control board.

Connect to Infinity connections AB only when Infinity User Interface is available. If additional grounded is needed, use C terminal.

Standard non-communicating thermostat connections are possible when you connect to standard thermostat connections W, Y1, Y2, and O. If additional grounding is needed, use C terminal. Refer to wiring label for further clarification.

General Information

Use No. 18 AWG color-coded, insulated (35°C minimum) wire for all installations.

All wiring must be NEC Class 1 and must be separated from incoming power leads.

Use furnace transformer, fan coil transformer, or accessory transformer for control power, 24v/40va minimum. The outdoor unit requires a minimum of 27va/24vac control power.

Final Wiring Check

IMPORTANT: Check factory wiring and field wire connections to ensure terminations are secured properly. Check wire routing to ensure wires are not in contact with tubing, sheet metal, etc.

Compressor Crankcase Heater

Furnish power to crankcase heater a minimum of 24 hr before starting unit. To furnish power to heater only, set thermostat to OFF and close electrical disconnect to outdoor unit.

Airflow Setup for Evolution Control Furnace or FE Fan Coil (communicating)

When using an Evolution User Interface, airflow is automatically selected based on equipment size. See User Interface Installation Instructions for available adjustments.

Airflow Selections (ECM Furnaces- non communicating)

The ECM Furnaces provide blower operation to match the capacities of the compressor during high and low stage cooling operation. Tap selections on the furnace control board enable the installing technician to select the proper airflows for each stage of cooling. Below is a brief summary of the furnace airflow configurations

1. The Y2 call for high stage cooling energizes the “Cool” tap on the control board. The grey wire from cool tap is connected to tap 5 on the motor. Refer to the furnace Product Data to find the corresponding airflow. If the airflow setting for high cooling needs to be switched from tap 5 to a different tap, jumper a connection from the cool tap to the desired tap so that the Y2 signal is communicated via the cool tap to the desired speed tap.

NOTE: Both Y1 and Y2 may be energized for high stage.

2. The Y1 call for low stage cooling energizes the “Fan” tap on the control board. The red wire from the fan tap is connected to tap 1 on the motor. Refer to the furnace Product Data to find the corresponding airflow. If the airflow setting for low cooling needs to be switched from tap 1 to a different tap, jumper a connection from the Fan tap to the desired tap so that the Y1 signal is communicated via the Fan tap to the desired speed tap. The Y1 setting will also govern the continuous fan airflow for the furnace.

Refer to the furnace literature for further details.

Airflow Selection for Variable Speed Furnaces (non-communicating)

The variable speed furnaces provide blower operation to match the capacities of the compressor during high and low stage cooling operation. The furnace control board allows the installing technician to select the proper airflows for each stage of cooling. Below is a summary of required adjustments. See furnace installation instructions for more details:

1. Turn SW1--5 ON for 400 CFM/ton airflow or OFF for 350 CFM/ton airflow. Factory default is OFF.
2. The A/C DIP switch setting determines airflow during high stage cooling operation. Select the A/C DIP switch setting corresponding to the available airflow shown in the furnace Installation Instructions that most closely matches the required airflow shown in the air conditioning Product Data for HIGH speed.
3. The CF DIP switch setting determines airflow during low stage cooling operation. Select the CF DIP switch setting corresponding to the available airflow shown in the furnace installation instructions that most closely matches the required airflow shown in the air conditioning Product Data for LOW speed. If a higher or lower continuous fan speed is desired, the continuous fan speed can be changed using the fan switch on the thermostat. Refer to the furnace Installation Instructions for details of how to use this feature.

Airflow Selection for FV4C Fan Coils Using Non-Comm. (Non-Evolution) Thermostats

The FV4C provides high- and low-stage blower operation to match the capacities of compressor at high- and low-stage. To select recommended airflow, refer to FV4C Installation Instructions. The FV4C utilizes an Easy Select control board that allows the installing technician to select proper airflows. For adjustments to control board, select appropriate HP SIZE and CFM ADJUST setting. This fan coil has an adjustable blower off delay factory set at 90 sec for high- and low-stage blower operation.

When using a communicating (Evolution) control, dipswitch adjustments are not necessary. Airflows are determined by Evolution Control setup. The fan coil is the FE4A.

For other combinations of equipment consult Product Data Digest.

Install Accessories

Refer to the individual instructions packaged with kits or accessories when installing.

When using a communicating control with the fan coil or the furnace, dip switch adjustments are not necessary. The outdoor unit configuration and the indoor airflows are determined by communicating control setup.

Start-Up

⚠ CAUTION

UNIT OPERATION AND SAFETY HAZARD

Failure to follow this caution may result in personal injury, equipment damage or improper operation.

Observe the following:

1. Do not overcharge system with refrigerant.
2. Do not operate unit in a vacuum or at negative pressure.
3. Do not disable low pressure switch
4. Dome temperatures may be hot.

⚠ CAUTION

PERSONAL INJURY HAZARD

Failure to follow this caution may result in personal injury.

Wear safety glasses, protective clothing, and gloves when handling refrigerant.

⚠ CAUTION

ENVIRONMENTAL HAZARD

Failure to follow this caution may result in environmental damage.

Federal regulations require that you do not vent refrigerant to the atmosphere. Recover during system repair or final unit disposal.

Follow these steps to properly start up the system:

1. After system is evacuated, fully open liquid and vapor service valves.
2. Close electrical disconnects to energize system.
3. Set room thermostat or User Interface at desired temperature. Be sure set point is below indoor ambient temperature and is set low enough to energize desired stage.
4. Set room thermostat or User Interface to HEAT or COOL and fan control to AUTO or ON, as desired. Wait for appropriate time delay(s). Operate unit for 15 minutes. Check refrigerant charge.

NOTE: Systems using only a non-communicating (non-Evolution) thermostat, Bryant electronic thermostats are equipped with a 15-minute staging timer. This timer prevents the two-stage system from operating at high stage until unit has been operating in low stage for 15 minutes, unless there is at least a ±5°F (±2.8°C) difference between room temperature and thermostat set point. To force high stage (after a minimum of 2 minutes in low stage), adjust the set point at least ±5°F (±2.8°C) below room ambient.

System Functions And Sequence Of Operation

The 286B/289B models utilize either an Evolution Communicating User Interface or a 2-stage heat pump thermostat. With a call for first stage cooling, the outdoor fan and low-stage compressor are energized. If low-stage cannot satisfy cooling demand, high-stage is energized by the second stage of indoor thermostat. After second stage is satisfied, the unit returns to low-stage operation until first stage is satisfied or until second stage is required again.

When both first stage and second stage cooling are satisfied, the compressor will shut off. When a 2-stage unit is operating at low-stage, system vapor (suction) pressure will be higher than a standard single-stage system or high-stage operation.

When the outdoor ambient is more the 100°F (37.8°C), the outdoor fan will continue to run for one minute after compressor shuts off. This reduces pressure differential for easier starting in the next cycle.

With non-communicating (non-Evolution) systems, with first stage of cooling, Y1 and O are powered on; and with second stage of cooling, Y1, Y2, and O are on. For these systems, with first stage of heating Y1 is on and for second stage of heating, Y1 and Y2 are on. When the reversing valve is energized, O is powered on.

Communication and Status Function Lights

For Evolution Control only, Green communications (COMM) Light

A green LED **(COMM light)** on the outdoor board (see Fig. 6) indicates successful communication with the other system products. The green LED will remain OFF until communication is established. Once a valid command is received, the green LED will turn ON continuously. If no communication is received within 2 minutes, the LED will be turned OFF until the next valid communication.

Amber Status Light

An amber colored **STATUS light** is used to display the operation mode and fault codes as specified in the troubleshooting section. See Table 6 for codes and definitions.

NOTE: Only one code will be displayed on the outdoor unit control board (the most recent, with the highest priority).

Crankcase Heater Operation

The crankcase heater is de-energized when the compressor is running. The crankcase heater is energized when the compressor is off and the ambient is less than 42°F (5.55°C). When the ambient temperature is between 65°F (18.33°C) and 42°F (5.55°C) the crankcase heater is energized 30 minutes after the compressor is turned off. When the ambient is above 65°F (18.33°C), the crankcase heater remains de-energized after the compressor is turned off.

Outdoor Fan Motor Operation

The outdoor unit control energizes the outdoor fan any time the compressor is operating except for low-ambient cooling operation.

The outdoor fan remains energized if a pressure switch or compressor overload should open. Outdoor fan motor will continue to operate for one minute after the compressor shuts off when the outdoor ambient is greater than or equal to 100°F (37.78°C) to reduce pressure differential for easier starting on next cycle.

On 286B models - The outdoor fan motor is a PSC type. A fan relay on the control board turns the fan off and on by opening and closing a high voltage circuit to the motor. It does not change speeds between low and high stage operation.

On 289B models - The outdoor fan is an ECM type. The motor control is continuously powered with high voltage. The motor speed is determined by electrical pulses provided by the PWM outputs on the control board. The ECM motor RPM adjusts to outdoor conditions as described in Table 3. The PWM output can be measured between the PWM1 and PWM2 terminals on the circuit board with a volt meter set to DC volts.

Table 3 – Outdoor Fan Motor PWM
Outdoor Temp (DC volts, Tolerance +/- 2%)

MODEL	LOW-STAGE (OAT≤104°F/40°C)	HIGH-STAGE (OAT≤104°F/40°C)	LOW- & HIGH-STAGE (OAT>104°F/40°C)
289B024	8.72	9.35	11.90
289B036	9.06	10.23	11.90
289B048	9.91	11.04	11.90
289B060	10.83	11.70	11.90

NOTE:
For 289B models in low-ambient cooling, the PWM output for both high- and low-stage equals the value for low-stage operation below 55°F (12.8°C).

In low ambient cooling (below 55°F/12.78°C) on 286B and 289B models, the control board cycles the fan off and on.

Time Delays

The unit time delays include:

- Five minute time delay to start cooling or heating operation when there is a call from the thermostat or user interface. To bypass this feature, momentarily short and release Forced Defrost pins.
- Five minute compressor re-cycle delay on return from a brown-out condition.
- Two minute time delay to return to standby operation from last valid communication (with Evolution only).
- One minute time delay of outdoor fan at termination of cooling mode when outdoor ambient is greater than or equal to 100°F (37.78°C).
- Fifteen second delay at termination of defrost before the auxiliary heat (W1) is de-energized.
- Twenty second delay at termination of defrost before the outdoor fan is energized (unless fan delay defeated).
- 70 and 60 second compressor delays when Quiet Shift-2 enabled.
- There is no delay between staging from low to high and from high to low capacity. The compressor will change from low to high and from high to low capacity "on the fly" to meet the demand.

Compressor Operation:

The basic scroll design has been modified with the addition of an internal unloading mechanism that opens a by-pass port in the first compression pocket, effectively reducing the displacement of the scroll. The opening and closing of the by-pass port is controlled by an internal electrically operated solenoid. The modulated scroll uses a single step of unloading to go from full capacity to approximately 67% capacity.

A single speed, high efficiency motor continues to run while the scroll modulates between the two capacity steps. Modulation is achieved by venting a portion of the gas in the first suction pocket back to the low side of the compressor, thereby reducing the effective displacement of the compressor.

Full capacity is achieved by blocking these vents, thus increasing the displacement to 100%. A DC solenoid in the compressor controlled by a rectified 24 volt AC signal in the external solenoid plug moves the slider ring that covers and uncovers these vents.

The vent covers are arranged in such a manner that the compressor operates at approximately 67% capacity when the solenoid is not energized and 100% capacity when the solenoid is energized. The loading and unloading of the two step scroll is done "on the fly" without shutting off the motor between steps.

NOTE: 67% compressor capacity translates to approximately 75% cooling or heating capacity at the indoor coil.

The compressor will always start unloaded and stay unloaded for five seconds even when the thermostat is calling for high stage capacity.

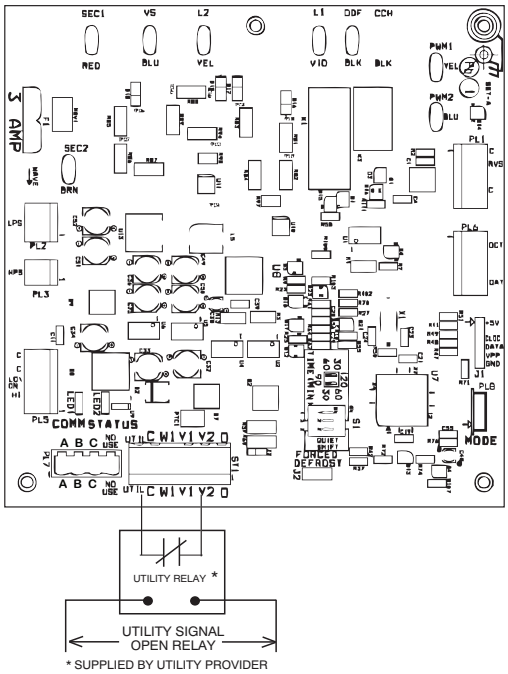

A12260

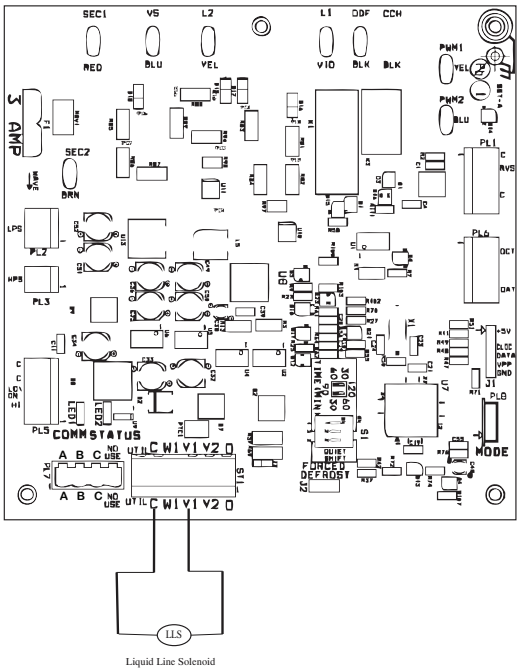

A12261

Fig. 6 - 2-Stage Control Board

GENERAL INFORMATION

Evolution Controlled low ambient cooling:

This unit is capable of low ambient cooling down to 0°F (-17.8°C) without a kit ONLY when using an Evolution Control. A low ambient kit is not required for Evolution controlled low ambient operation. The Evolution Control provides an automatic evaporator freeze thermostat. Low ambient cooling must be enabled in the User Interface setup. Fan may not begin to cycle until about 40°F (4.4°C) OAT. Fan will cycle based on coil and outdoor air temperature.

Evolution controlled low ambient mode operates as follows:

- Fan is OFF when outdoor coil temperature is less than outdoor air temperature (+ 3 °F/1.7°C) or outdoor fan has been ON for 30 minutes. (Fan is turned off to allow refrigerant system to stabilize.)
- Fan is ON when outdoor coil temperature is less than outdoor air temperature (+25°F/13.9°C) or outdoor coil temperature is more than 80°F (26.7°C) or if outdoor fan has been OFF for 30 minutes. (Fan is turned on to allow refrigerant system to stabilize.)
- Low pressure switch is ignored for first 3 minutes during low ambient start up. After 3 minutes, if LPS trips, then outdoor fan motor is turned off for 10 minutes, with the compressor running. If LPS closes within 10 minutes then cooling continues with the outdoor fan cycling per the coil temperature routine listed above for the remainder of the cooling cycle. If the LPS does not close within 10 minutes, then the normal LPS trip response (shut down cooling operation and generate LPS trip error) will occur.

Defrost

This control offers 5 possible defrost interval times: 30, 60, 90, 120 minutes, or AUTO.

Defrost intervals are selected by dip switches on the unit control board or by the Evolution Control User Interface. The Evolution Control selection overrides the control board dip switch settings.

Defrost interval times: 30, 60, 90, and 120 minutes or AUTO are selected by the Evolution Control User Interface (the dip switches are not used.)

AUTO defrost adjusts the defrost interval time based on the last defrost time as follows:

- When defrost time <3 minutes, the next defrost interval=120 minutes.
- When defrost time 3-5 minutes, the next defrost interval=90 minutes.
- When defrost time 5-7 minutes, the next defrost interval=60 minutes.
- When defrost time >7 minutes, the next defrost interval=30 minutes.

The control board accumulates compressor run time. As the accumulated run time approaches the selected defrost interval time, the control board monitors the coil temperature sensor for a defrost demand. If a defrost demand exists, a defrost cycle will be initiated at the end of the selected time interval. A defrost demand exists when the coil temperature is at or below 32°F (0°C) for 4 minutes during the interval.

The defrost cycle is terminated when the coil temperature reaches 65°F (18.33°C)or 10 minutes has passed. When OAT is > 25°F (-3.9°C), defrost will occur in low or high stage as demanded by the thermostat or User Interface.

If OAT is ≤25°F (3.9°C), defrost will occur in high stage only, regardless of thermostat or User Interface demand, and will terminate at 50°F (10°C) coil temperature with a minimum of 2.5 minutes in defrost.

If the coil temperature does not reach 32°F (0°C) within the interval, the interval timer will be reset and start over.

- Upon initial power up the first defrost interval is defaulted to 30 minutes. Remaining intervals are at selected times.
- Defrost is only allowed to occur below 50°F (10°C) outdoor ambient temperature.

The outdoor fan output (ODF) will remain off for 20 seconds after termination. This delay will allow time for the system to capture the heat from the outdoor coil and reduce the “steam cloud” effect that may occur on transition from defrost to heating cycle. The outdoor fan output OFF delay of 20 seconds may be defeated to enable the fan to energize immediately at the time of termination and 12 seconds prior to the reversing valve de-energizing through the User Interface setup screen (available with SYSTXBBUID01-C), or forced defrost pins as follows:

The ODF fan delay defeat can be toggled by shorting the forced defrost pins for >15 seconds while in the standby mode (status LED on solid). The LED will start to flash when the toggle has taken place.

Status code 4 shows the fan delay defeat is active (no delay).

Status code 3 shows that it is not active (20 second delay).

The code will continue to be displayed until after the short is removed. There is a 5 second wait before the code is cancelled once the short is removed. The code that is flashing will finish before going back to solid LED. The control is shipped with the ODF fan delay defeat NOT active.

The change in status is remembered until toggled to a new status. A power down/power up sequence will not reset the status. It may be necessary to do the toggle twice to cycle to the desired state of the defeat.

Defrost Hold

On a non-communicating system, if the thermostat becomes satisfied (Y1 or Y1 and Y2) before the defrost cycle is terminated, the control will "hold" in defrost mode and finish the defrost cycle on the next call for heat.

On models with communicating Evolution Control, defrost hold is not needed because the User Interface will complete the defrost cycle before shutting down the system.

Forced Defrost

On a system with non-communicating (non-Evolution) control, forced defrost can be initiated by manually shorting the 2-pin header labeled FORCED DEFROST (see Fig 6) on the control board for 5 seconds then releasing.

On a system with communicating (Evolution) control, forced defrost is initiated with the User Interface.

On all models, during a Forced Defrost:

- If coil temperature is at defrost temperature of 32°F (0°C), and outdoor air temperature is below 50°F (10°C), a full defrost sequence will occur.
- If coil temperature or outdoor air temperature does not meet the above requirements, an abbreviated 30 second defrost will occur.

Quiet Shift-2

Quiet Shift-2 is a field selectable defrost mode which may eliminate occasional noise that could be heard at the start and finish of the defrost cycle.

On a non-communicating system, this feature must be enabled by selecting the 3rd position of the 3-position dip switch on the outdoor control board. For communicating systems, it must be enabled at the User Interface. When activated, the following sequence of operation occurs:

Defrost Initiation – The compressor is de-energized for 70 seconds. During this 70 second compressor off time, the reversing valve will be energized. Once the 70 second compressor off time has been reached, the compressor will be energized then the outdoor fan will be de-energized at which time the normal defrost cycle begins.

Defrost Termination – the outdoor fan will be energized shortly before the compressor is de-energized for 60 seconds. During the compressor 60 second off time, the reversing valve will be de-energized. Once the 60 second compressor off time has been completed, the compressor will be energized at which time the system will be in normal heat mode.

Liquid-Line Solenoid Accessory

In heat pump long-line applications, a liquid-line solenoid is required to control refrigerant migration in the heating mode. The solenoid should be installed near the outdoor unit with the arrow facing the outdoor unit. This is the direction of flow control. See application manual for long-line application details.

Accessory Liquid Solenoid with Evolution Communicating Control: When using the Evolution Control, the liquid-line solenoid output is provided at the Y1 connection. Connect the solenoid as shown in the wiring label diagram. This is a 24vac output that is energized whenever the compressor is energized. It closes, in the compressor off mode, to prevent refrigerant migration into the unit through the liquid-line.

On Systems with Accessory Liquid Solenoid Using a Non-Communicating Thermostat: The liquid solenoid is connect to the Y1 and C terminal connections (see Fig. 6) and assumes that both Y2 and Y1 are energized by the thermostat during call for high stage operation. The liquid solenoid closes, in the compressor off mode, to prevent refrigerant migration into the unit through the liquid-line.

Check Charge

Charged in high stage only

Factory charge amount and desired subcooling are shown on unit rating plate for high stage. Charging method is shown on information plate inside unit. To properly check or adjust charge, conditions must be favorable for subcooling charging. Favorable conditions exist when the outdoor temperature is between 70°F and 100°F (21.11°C and 37.78°C), and the indoor temperature is between 70°F and 80°F (21.11°C and 26.67°C). Follow the procedure below:

Unit is factory charged for 15ft (4.57 m) of lineset. Adjust charge by adding or removing 0.6 oz/ft (17.74 g/m) of 3/8 liquid line above or below 15ft (4.57 m) respectively.

For standard refrigerant line lengths (80 ft/24.38 m or less), allow system to operate in cooling mode at least 15 minutes. If conditions are favorable, check system charge by subcooling method. If any adjustment is necessary, adjust charge slowly and allow system to operate for 15 minutes to stabilize before declaring a properly charged system.

If the indoor temperature is above 80°F (26.67°C), and the outdoor temperature is in the favorable range, adjust system charge by weight based on line length and allow the indoor temperature to drop to 80°F (26.67°C) before attempting to check system charge by subcooling method as described above.

If the indoor temperature is below 70°F (21.11°C), or the outdoor temperature is not in the favorable range, adjust charge for line set length above or below 15ft (4.57 m) only. Charge level should then be appropriate for the system to achieve rated capacity. The charge level could then be checked at another time when the both indoor and outdoor temperatures are in a more favorable range.

NOTE: If line length is beyond 80 ft (24.38 m) or greater than 20 ft (6.10 m) vertical separation, See Long Line Guideline for special charging requirements.

Heating Check Chart Procedure

To check system operation during heating cycle, refer to the Heat Pump Charging Instructions label on outdoor unit. This chart indicates whether a correct relationship exists between system operating pressure and air temperature entering indoor and outdoor units. If pressure and temperature do not match on chart, system refrigerant charge may not be correct. Do not use chart to adjust refrigerant charge.

NOTE: In heating mode, check refrigerant charge only when pressures are stable. If in doubt, remove charge and weigh in correct refrigerant charge.

NOTE: When charging is necessary during heating season, charge must be weighed in accordance with unit rating plate, ±0.6 oz./ft (±17.74 g/m). of 3/8-in. liquid-line above or below 15 ft (4.57 m), respectively.

EXAMPLE:

To calculate additional charge required for a 25-ft. line set:
25 ft. - 15 ft. = 10 ft. X 0.6 oz./ft. = 6 oz. of additional charge.

MAJOR COMPONENTS

2-Stage Control Board

The HP control board controls the following functions:

- High and low stage compressor contactor operation
- Outdoor fan motor operation
- Reversing valve operation
- Defrost operation
- Low ambient cooling
- Crankcase heater operation
- Compressor external protection
- Pressure switch monitoring
- Time Delays

Field Connections

On non-communicating (non-Evolution) system, the two-stage control receives 24vac low-voltage control system inputs through the Y1, Y2, and O connections located at the bottom of the control board (see Fig. 6.) On a non-communicating system, output W1 is connected to the control board for auxiliary heat.

For a communicating system, use the AB Evolution connections.

Two Stage Compressor

The two stage compressor contains motor windings that provide 2-pole (3500 RPM) operation.

Compressor Internal Relief

The compressor is protected by an internal pressure relief (IPR) which relieves discharge gas into the compressor shell when differential between suction and discharge pressure exceeds 550-625 psi. The compressor is also protected by an internal overload attached to motor windings.

Compressor Control Contactor

The contactor has a 24volt coil. The electronic control board controls the operation of the contactor.

TROUBLESHOOTING

If the compressor fails to operate with a cooling call, the table below (Resistance table) can be used to verify if there is any damage to the compressor windings causing system malfunction.

Table 4 – Winding Resistance

Winding	Winding resistance at 70°F +/– 20°F (21.11°C +/– 11.11°C)			
	024	036	048	060
Start (S–C)	1.64	1.52	1.86	1.63
Run (R–C)	1.30	0.88	0.52	0.39

Systems Communication Failure

If communication with the Evolution control is lost with the User Interface, the control will flash the appropriate fault code. (See Table 6.) Check the wiring to the User Interface and the indoor and outdoor units.

Model Plug

Each control board contains a model plug. The correct model plug must be installed for or the system to operate properly. (See Table 5.)

Table 5 – Model Plug Information

MODEL NUMBER	MODEL PLUG NUMBER	PIN RESISTANCE (K–ohms)	
		Pins 1–4	Pins 2–3
286BNA024	HK70EZ041	18	91
286BNA036	HK70EZ043	18	150
286BNA048	HK70EZ045	18	220
286BNA060	HK70EZ047	18	360
289BNA024	HK70EZ010	5.1	120
289BNA036	HK70EZ012	5.1	180
289BNA048	HK70EZ014	5.1	270
289BNA060	HK70EZ016	11	5.1

The model plug is used to identify the type and size of unit to the control.

On new units, the model and serial numbers are input into the board's memory at the factory. If a model plug is lost or missing at initial installation, the unit will operate according to the information input at the factory and the appropriate error code will flash temporarily. An RCD replacement board contains no model and serial information. If the factory control board fails, the model plug must be transferred from the original board to the replacement board for the unit to operate.

NOTE: The model plug takes priority over factory model information input at the factory. If the model plug is removed after initial power up, the unit will operate according to the last valid model plug installed, and flash the appropriate fault code temporarily.

Pressure Switch Protection

The outdoor unit is equipped with high- and low-pressure switches. If the control senses the opening of a high- or low-pressure switch, it will respond as follows:

1. De-energize the compressor contactor.
2. Keep the outdoor fan operating for 15 minutes.
3. Display the appropriate fault code (see Table 6).
4. After a 15 minute delay, if there is a call for cooling or heating and LPS or HPS is reset, the compressor contactor is energized.
5. If LPS or HPS has not closed after a 15 minute delay, the outdoor fan is turned off. If the open switch closes anytime after the 15 minute delay, then resume operation with a call for cooling or heating.
6. If LPS or HPS trips 3 consecutive cycles, the unit operation is locked out for 4 hours.
7. In the event of a high-pressure switch trip or high-pressure lockout, check the refrigerant charge, outdoor fan operation, and outdoor coil (in cooling) for airflow restrictions, or indoor airflow in heating.
8. In the event of a low-pressure switch trip or low-pressure lockout, check the refrigerant charge and indoor airflow (cooling) and outdoor fan operation and outdoor coil in heating.

Control Fault

If the outdoor unit control board has failed, the control will flash the appropriate fault code (see Table 6). The control board should be replaced.

Brown-Out Protection

If the line voltage is less than 187v for at least 4 seconds, the appropriate compressor contactor and fan relay are de-energized. Compressor and fan operation are not allowed until voltage is a minimum of 190v. The control will flash the appropriate fault code (see Table 6).

230V Brown-Out Protection Defeated

The brownout feature can be defeated if needed for severe noisy power conditions. This defeat should always be a last resort to solving the problem. Defeat is available on the User Interface setup screen (available with SYSTXBBUID01-C), or can be initiated through the forced defrost pins for non-communicating systems as follows:

The brownout toggle is accomplished by sorting the defrost pins from power up with the OAT and OCT sensor connector removed. After 3 seconds, the status of the force defrost short and the OAT/OCT as open will be checked. If correct, then the brownout will be toggled.

Status code 6 shows the brownout is disabled.

Status code 5 shows the brownout is active.

After the brownout defeat is set, power down and reinstall the OAT/OCT sensor and remove the short from the forced defrost pins. As long as the short on the forced defrost remains, the OAT and OCT faults will not be cleared. The code will continue to be flashed.

The control is shipped with the brownout active. The change in status is remembered until toggled to a new status. A power down/power up sequence will not reset the status. it may be necessary to do the toggle twice to cycle to the desired state of the defeat.

230V Line (Power Disconnect) Detection

If there is no 230v at the compressor contactor(s) when the indoor unit is powered and cooling or heating demand exists, the appropriate fault code is displayed. Verify the disconnect is closed and 230v wiring is connected to the unit.

Compressor Voltage Sensing

The control board input terminals labeled VS and L2 (see Fig. 6) are used to detect compressor voltage status and alert the user of potential problems. The control continuously monitors the high voltage on the run capacitor of the compressor motor. Voltage should be present any time the compressor contactor is energized and voltage should not be present when the contactor is de-energized.

Contactor Shorted Detection

If there is compressor voltage sensed when there is no demand for compressor operation, the contactor may be stuck closed or there may be a wiring error. The control will flash the appropriate fault code.

If the control senses the compressor voltage after start-up and is then absent for 10 consecutive seconds while cooling or heating demand exists, the thermal protector is open. The control de-energizes the compressor contactor for 15 minutes, but continues to operate the outdoor fan. The control Status LED will flash the appropriate code shown in Table 6. After 15 minutes, with a call for low or high stage cooling or heating, the compressor contactor is energized. If the thermal protector has not re-set, the outdoor fan is turned off. If the call for cooling or heating continues, the control will energize the compressor contactor every 15 minutes. If the thermal protector closes, (at the next 15 minute interval check) the unit will resume operation.

If the thermal cutout trips for three consecutive cycles, then unit operation is locked out for 4 hours and the appropriate fault code is displayed.

No 230V at Compressor Contactor

If the compressor voltage is not sensed when the compressor should be starting, the appropriate contactor may be stuck open or there is a wiring error. The control will flash the appropriate fault code. Check the contactor and control box wiring.

Troubleshooting units for proper switching between low & high stages

Check the suction pressures at the service valves. Suction pressure should be reduced by 3-10% when switching from low to high capacity.

Compressor current should increase 20 to 45% when switching from low to high stage. The compressor solenoid when energized in high stage, should measure 24vac across pin numbers PL5-2 HI and PL5-5 C . When the compressor is operating in low stage, the 24v DC compressor solenoid coil is de-energized. When the compressor is operating in high stage, the 24v DC solenoid coil is energized.

The solenoid plug harness that is connected to the compressor has an internal rectifier that converts the 24v AC signal to 24v DC. **DO NOT INSTALL A PLUG WITHOUT AN INTERNAL RECTIFIER**.

Unloader Test Procedure

The unloader is the compressor internal mechanism, controlled by the DC solenoid, that modulates between high and low stage. If it is suspected that the unloader is not working, the following methods may be used to verify operation.

1. Operate the system and measure compressor amperage. Cycle the unloader on and off at 30 second plus intervals at the User Interface (from low to high stage and back to low stage). Wait 5 seconds after staging to high before taking a reading. The compressor amperage should go up or down at least 20 percent.
2. If the expected result is not achieved, remove the solenoid plug from the compressor and with the unit running and the User Interface or thermostat calling for high stage, test the voltage output at the plug with a DC voltmeter. The reading should be 24 volts DC.
3. If the correct DC voltage is at the control circuit molded plug, measure the compressor unloader coil resistance. The resistance should be approximately 330 or 1640 ohms depending on unloader coil supplier. If the coil resistance is infinite or is grounded, the compressor must be replaced.

Temperature Thermistors

Thermistors are electronic devices which sense temperature. As the temperature increases, the resistance decreases. Thermistors are used to sense outdoor air (OAT) and coil temperature (OCT). Refer to Fig. 7 for resistance values versus temperature.

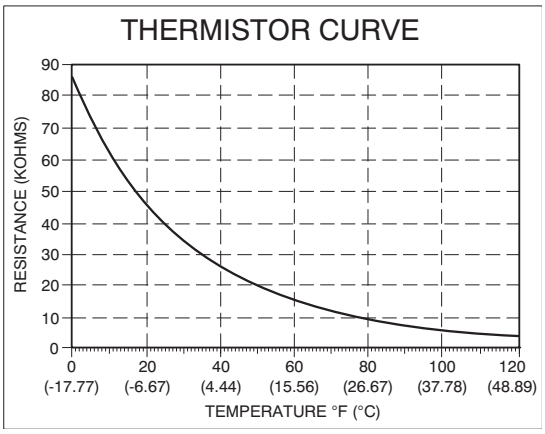

A08054

Fig. 7 - Resistance Values Versus Temperature

If the outdoor air or coil thermistor should fail, the control will flash the appropriate fault code. (See Table 6.)

IMPORTANT: The outdoor air thermistor and coil thermistor should be factory mounted in the final locations. **Check to ensure thermistors are mounted properly per Fig. 8 and Fig. 9.**

Thermistor Sensor Comparison

The control continuously monitors and compares the outdoor air temperature sensor and outdoor coil temperature sensor to ensure proper operating conditions. The comparison is:

- In cooling if the outdoor air sensor indicates ≥ 10°F (≥ 5.6°C) warmer than the coil sensor (or) the outdoor air sensor indicates ≥ 20°F (≥ 11°C) cooler than the coil sensor, the sensors are out of range.
- In heating if the outdoor air sensor indicates ≥ 35°F (≥ 19.4°C) warmer than the coil sensor (or) the outdoor air sensor indicates ≥ 10°F (≥ 5.6°C) cooler than the coil sensor, the sensors are out of range.

If the sensors are out of range, the control will flash the appropriate fault code as shown in Table 6.

The thermistor comparison is not performed during low ambient cooling or defrost operation.

Failed Thermistor Default Operation

Factory defaults have been provided in the event of failure of outdoor air thermistor (OAT) and/or outdoor coil thermistor (OCT).

If the OAT sensor should fail, low ambient cooling will not be allowed and the one-minute outdoor fan off delay will not occur. Defrost will be initiated based on coil temperature and time.

If the OCT sensor should fail, low ambient cooling will not be allowed. Defrost will occur at each time interval during heating operation, but will terminate after 5 minutes.

If there is a thermistor out of range error, defrost will occur at each time interval during heating operation, but will terminate after 5 minutes.

Count the number of short and long flashes to determine the appropriate flash code. Table 6 gives possible causes and actions related to each error.

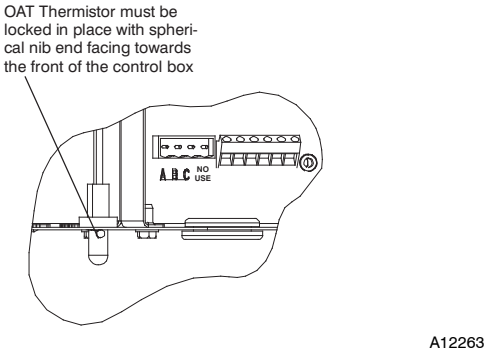

Fig. 8 - Outdoor Air Thermistor (OAT) Attachment

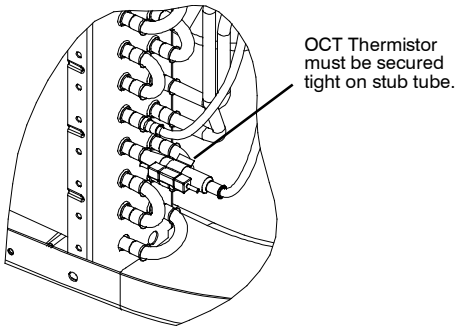

Fig. 9 - Outdoor Coil Thermistor (OCT) Attachment

Status Codes

Table 6 shows the status codes flashed by the amber status light. Most system problems can be diagnosed by reading the status code as flashed by the amber status light on the control board.

The codes are flashed by a series of short and long flashes of the status light. The short flashes indicate the first digit in the status code, followed by long flashes indicating the second digit of the error code.

The short flash is 0.25 seconds ON and the long flash is 1.0 second ON. Time between flashes is 0.25 seconds. Time between short flash and first long flash is 1.0 second. Time between code repeating is 2.5 seconds with LED OFF.

EXAMPLE:

3 short flashes followed by 2 long flashes indicates a 32 code. Table 6 shows this to be low pressure switch open.

Table 6 – TROUBLESHOOTING

OPERATION	FAULT	AMBER LED FLASH CODE	POSSIBLE CAUSE AND ACTION
Standby – no call for unit operation	None	On solid, no flash	Normal operation
Low Stage Cool/Heat Operation	None	1, pause	Normal operation
High Stage Cool/Heat Operation	None	2, pause	Normal operation
Brown out protection is Disabled	None	5, pause	User made selection, see instructions for more detail
Brown out protection is Active	None	6, Pause	User made selection, see instructions for more detail
	System Communications Failure	16	Communication with User Interface lost. Check wiring to User Interface, indoor and outdoor units
	Invalid Model Plug	25	Control does not detect a model plug or detects an invalid model plug. Unit will not operate without correct model plug.
	High Pressure Switch Open	31*	High–pressure switch trip. Check refrigerant charge, outdoor fan operation and coils for airflow restrictions.
	Low Pressure Switch or Discharge Temp Switch Open	32*	Low–pressure switch or discharge temperature switch trip. Check refrigerant charge and indoor air flow.
	Control Fault	45	Outdoor unit control board has failed. Control board needs to be replaced.
	Brown Out (230 v)	46	Line voltage < 187v for at least 4 seconds. Compressor and fan operation not allowed until voltage≥190v. Verify line voltage.
	No 230v at Unit	47	There is no 230v at the contactor when indoor unit is powered and cooling/heating demand exists. Verify the disconnect is closed and 230v wiring is connected to the unit.
	Outdoor Air Temp Sensor Fault	53	Outdoor air sensor not reading or out of range. Ohm out sensor and check wiring.
	Outdoor Coil Sensor Fault	55	Coil sensor not reading or out of range. Ohm out sensor and check wiring.
	Thermistors out of range	56	Improper relationship between coil sensor and outdoor air sensor. Ohm out sensors and check wiring.
	Low Stage Thermal Cutout	71*	Compressor operation detected then disappears while low stage demand exists. Possible causes are internal compressor overload trip or start relay and capacitor held in circuit too long (if installed).
	High Stage Thermal Cutout	72*	Compressor operation detected then disappears while high stage demand exists. Possible causes are internal compressor overload trip or start relay and capacitor held in circuit too long (if installed).
	Contactor Shorted	73	Compressor voltage sensed when no demand for compressor operation exists. Contactor may be stuck closed or there is a wiring error.
	No 230V at Compressor	74	Compressor voltage not sensed when compressor should be starting. Contactor may be stuck open or there is a wiring error.
	Low Stage Thermal Lockout	81	Thermal cutout occurs in three consecutive low/high stage cycles. Low stage locked out for 4 hours or until 24v power recycled.
	High Stage Thermal Lockout	82	Thermal cutout occurs in three consecutive high/low stage cycles. High stage locked out for 4 hours or until 24v power recycled.
	Low–Pressure Lockout	83	Low pressure switch trip has occurred during 3 consecutive cycles. Unit operation locked out for 4 hours or until 24v power recycled.
	High–Pressure Lockout	84	High pressure switch trip has occurred during 3 consecutive cycles. Unit operation locked out for 4 hours or until 24v power recycled.

* Sequence: Compressor contactor is de–energized and outdoor fan is energized for up to 15 minutes. If demand still exists, control will energize compressor contactor after 15 minute delay. If fault is cleared, unit will resume operation. If fault still exists, fan shuts off, and error code continues to flash. Control will attempt re–start every 15 minutes. Cycling low voltage defeats the 15 minute delay.

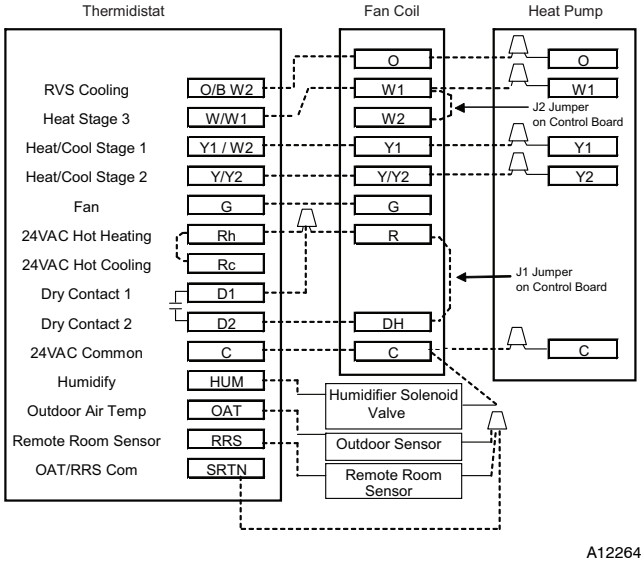

Fig. 10 - Thermidistat Models T6-PRH-01 or T6-NRH-01) Wiring with 2-Stage Heat Pump (non-communicating)

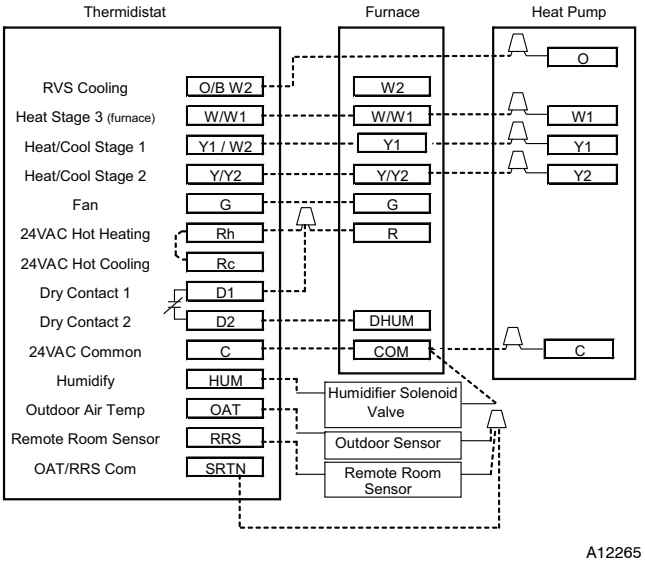

Fig. 11 - Thermidistat Model T6-PRH-01 or T6-NRH-01 with Variable Speed Furnace and 2-Stage Heat Pump (non-communicating)

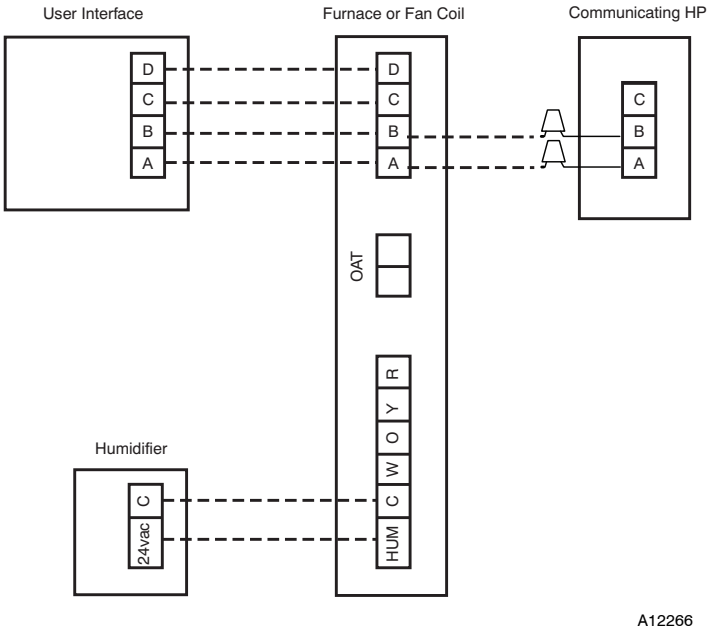

Fig. 12 - Variable Speed Furnace or Fan Coil Wiring with Communicating 2-Stage HP

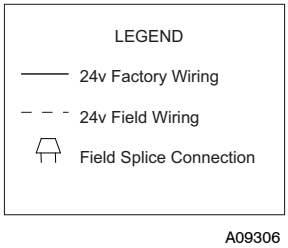

FINAL CHECKS

IMPORTANT: Before leaving job, be sure to do the following:

1. Ensure that all wiring is routed away from tubing and sheet metal edges to prevent rub-through or wire pinching.
2. Ensure that all wiring and tubing is secure in unit before adding panels and covers. Securely fasten all panels and covers.
3. Tighten service valve stem caps to 1/12-turn past finger tight.
4. Leave Users Manual with owner. Explain system operation and periodic maintenance requirements outlined in manual.
5. Fill out Dealer Installation Checklist and place in customer file.

CARE AND MAINTENANCE

For continuing high performance and to minimize possible equipment failure, periodic maintenance must be performed on this equipment.

Frequency of maintenance may vary depending upon geographic areas, such as coastal applications. See Owner's Manual for information.

PURON® (R-410A) REFRIGERANT QUICK REFERENCE GUIDE

- Puron refrigerant operates at 50-70 percent higher pressures than R-22. Be sure that servicing equipment and replacement components are designed to operate with Puron refrigerant.
- Puron refrigerant cylinders are rose colored.
- Recovery cylinder service pressure rating must be 400 psig, DOT 4BA400 or DOT BW400.
- Puron refrigerant systems should be charged with liquid refrigerant. Use a commercial type metering device in the manifold hose when charging into suction line with compressor operating.
- Manifold sets should be 700 psig high side and 180 psig low side with 550 psig low-side retard.
- Use hoses with 700 psig service pressure rating.
- Leak detectors should be designed to detect HFC refrigerant.
- Puron refrigerant, as with other HFCs, is only compatible with POE oils.
- Vacuum pumps will not remove moisture from oil.
- Do not use liquid-line filter driers with rated working pressures less than 600 psig.
- Do not leave Puron refrigerant suction line filter driers in line longer than 72 hours.
- Do not install a suction-line filter drier in liquid-line.
- POE oils absorb moisture rapidly. Do not expose oil to atmosphere.
- POE oils may cause damage to certain plastics and roofing materials.
- Wrap all filter driers and service valves with wet cloth when brazing.
- A factory-approved liquid-line filter drier is required on every unit.
- Do NOT use an R-22 TXV.
- If indoor unit is equipped with an R-22 TXV or piston metering device, it must be changed to a hard-shutoff Puron refrigerant TXV.
- Never open system to atmosphere while it is under a vacuum.
- When system must be opened for service, recover refrigerant, evacuate then break vacuum with dry nitrogen and replace filter driers. Evacuate to 500 microns prior to recharging.
- Do not vent Puron refrigerant into the atmosphere.
- Do not use capillary tube coils.
- Observe all **warnings**, **cautions**, and **bold** text.
- All indoor coils must be installed with a hard-shutoff Puron refrigerant TXV metering device.

©2012 Bryant Heating & Cooling Systems ● 7310 W. Morris St. ● Indianapolis, IN 46231

Edition Date: 06/12

Catalog No. II286–289B–04

Manufacturer reserves the right to discontinue, or change at any time, specifications or designs without notice and without incurring obligations.

Replaces: II286–289B–03