# 311AAV/JAV
# Deluxe Induced-Combustion
# 4-Way Multipoise Furnace

# Installation, Start-up, Operating, and Service and Maintenance Instructions -Series C

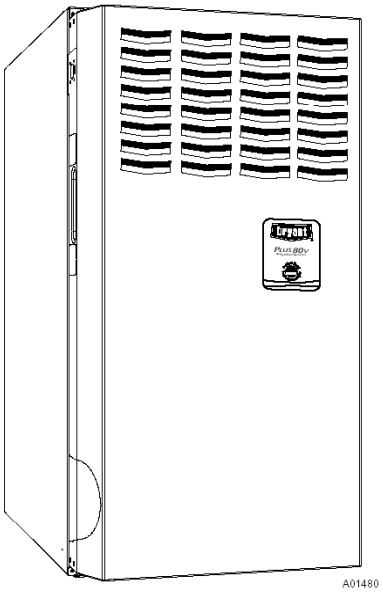


**The Plus 80™ Gas Furnace**

**The 311AAV/JAV Deluxe 4-Way Multipoise Gas Furnace offers outstanding features in an 80% AFUE furnace.** Deluxe features include: third fan relay for discrete continuous fan speed, the ability to change continuous fan speeds from the thermostat, dehumidify mode, standard Media Filter Cabinet, fault code storage, and more. The Plus 80 is very quiet thanks to a new combustion design that eliminates noise, not just muffle or box it in. Applications are easy with 4-way multipoise design, through-the-furnace downflow venting, 13 different venting options, and a door designed for easy service access. An inner blower door is provided for tighter sealing in sensitive applications. The 311AAV/JAV furnace is approved for use with natural or propane gas, and the 311JAV is also approved for use in Low NOx Air Quality Management Districts.

**STANDARD FEATURES**

- **Noise elimination combustion system**
- **Media Filter Cabinet included**
- **Microprocessor based "smart" control center**
  - **Fan On Plus™ -**Continuous Fan speed adjustable from thermostat
  - Dehumidify mode
  - Adjustable heating air temperature rise
  - LED diagnostics and self test feature
  - Non-volatile fault code storage
- **Patented blocked vent safeguard to ensure proper furnace venting**
- **All models are Chimney Friendly when used with accessory vent kit**
- **Insulated blower compartment**
- **Four-position furnace: upflow, horizontal right, horizontal left, downflow**
  Thirteen different vent options
- **Heat pump compatible**
- **Hot surface ignition (HSI)**
- **Residential installations eligible for consumer financing through the Comfort Credit Program**
- **Twinning in Upflow, Downflow and Horizontal**

**LIMITED WARRANTY**

- 20-year warranty on "Super S™" heat exchanger
- 5-year parts warranty on all other components

# Single-Stage Deluxe Induced-Combustion 4-Way Multipoise Furnace

Cancels: II 311A-45-4 II 311A-45-5

# Installation, Start-up, Operating, and Service and Maintenance Instructions Series 120/C

**NOTE:** Read the entire instruction manual before starting the installation.

This symbol → indicates a change since the last issue.

→ Portions of the text and tables are reprinted from NFPA 54/ANSI Z223.1-2002©, with permission of National Fire Protection Association, Quincy, MA 02269 and American Gas Association, Washington DC 20001. This reprinted material is not the complete and official position of the NFPA or ANSI on the referenced subject, which is represented only by the standard in its entirety.

## TABLE OF CONTENTS


SAFETY CONSIDERATIONS ....2
INTRODUCTION ....3
CODES AND STANDARDS ....3
- Safety ....3
- General Installation ....5
- Combustion and Ventilation Air ....5
- Duct Systems ....5
- Acoustical Lining and Fibrous Glass Duct ....5
- Gas Piping and Gas Pipe Pressure Testing ....5
- Electrical Connections ....5

ELECTROSTATIC DISCHARGE (ESD) PRECAUTIONS PROCEDURE ....5
LOCATION ....5
- General ....5
- Location Relative to Cooling Equipment ....7

AIR FOR COMBUSTION AND VENTILATION ....7
INSTALLATION ....10
- Upflow Installation ....10
  - Bottom Return Air Inlet ....10
  - Side Return Air Inlet ....10
  - Leveling Legs (If Desired) ....10
- Downflow Installation ....10
  - Bottom Return Air Inlet ....11
- Horizontal Installation ....12
  - Suspended Unit Support ....12
  - Platform Unit Support ....12
  - Roll-Out Protection ....12
  - Bottom Return Air Inlet ....13
  - Side Return Air Inlet ....13
- Filter Arrangement ....13
- Air Ducts ....13
  - General Requirements ....13
  - Ductwork Acoustical Treatment ....13
  - Supply Air Connections ....13
  - Return Air Connections ....14
- Gas Piping ....17
- Electrical Connections ....19
  - 115-V Wiring ....19
  - J-Box Relocation ....20
  - Electrical Connection to J-Box ....20
  - Power Cord Installation ....21
  - BX Cable Installation ....21
  - 24-V Wiring ....21
  - Accessories ....21
- Venting ....21
  - General Venting Requirements ....23
  - Masonry Chimney Requirements ....23
  - Appliance Application Requirements ....27
  - Additional Venting Requirements ....29
  - Sidewall Venting ....29

START-UP, ADJUSTMENT, AND SAFETY CHECK ....33
- General ....33
- Start-Up Procedures ....33
- Adjustments ....34
- Check Safety Controls ....36
- Checklist ....37

SERVICE AND MAINTENANCE PROCEDURES ....40
- Introduction ....40
  - General ....40
  - Electrical Controls and Wiring ....40
- Care and Maintenance ....43
  - Cleaning and/or Replacing Air Filter ....44
  - Blower Motor and Wheel ....44
  - Cleaning Heat Exchanger ....45
- Sequence of Operation ....47
- Wiring Diagrams ....49
- Troubleshooting ....49



**Manufacturer reserves the right to discontinue, or change at any time, specifications or designs without notice and without incurring obligations.**

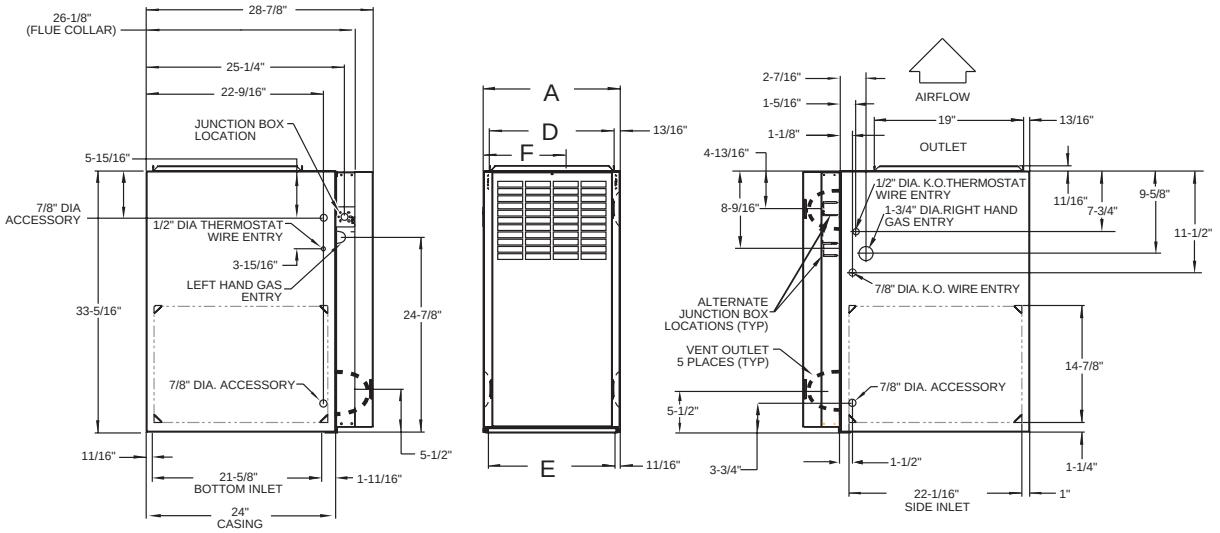


A04037

**NOTES:**
1. Two additional 7/8-in. diameter holes are located in the top plate.
2. Minimum return-air openings at furnace, based on metal duct. If flex duct is used, see flex duct manufacturer's recommendations for equivalent diameters.
   a. For 800 CFM-16-in. round or 14 1/2 x 12-in. rectangle.
   b. For 1200 CFM-20-in. round or 14 1/2 x 19 1/2-in. rectangle.
   c. For 1600 CFM-22-in. round or 14 1/2 x 22-in. rectangle.
   d. For airflow requirements above 1800 CFM, see Air Delivery table in Product Data literature for specific use of single side inlets. The use of both side inlets, a combination of 1 side and the bottom, or the bottom only will ensure adequate return air openings for airflow requirements above 1800 CFM.

→ **Fig. 1—Dimensional Drawing**

## SAFETY CONSIDERATIONS

**⚠ WARNING**

**FIRE, EXPLOSION, ELECTRICAL SHOCK, AND CARBON MONOXIDE POISONING HAZARD**

Failure to follow this warning could result in dangerous operation, serious injury, death, or property damage.

Improper installation, adjustment, alteration, service, maintenance, or use can cause carbon monoxide poisoning, explosion, fire, electrical shock, or other conditions which may cause personal injury or property damage. Consult a qualified service agency, local gas supplier, or your distributor or branch for information or assistance. The qualified service agency must use only factory-authorized and listed kits or accessories when modifying this product.

**⚠ CAUTION**

**FURNACE RELIABILITY HAZARD**

Improper installation or misapplication of furnace can require excessive servicing or cause premature component failure.

Application of this furnace should be indoors with special attention given to vent sizing and material, gas input rate, air temperature rise, unit leveling, and unit sizing.

Installing and servicing heating equipment can be hazardous due to gas and electrical components. **Only trained and qualified personnel should install, repair, or service heating equipment.** Untrained personnel can perform basic maintenance functions such as cleaning and replacing air filters. All other operations must be performed by trained service personnel. When working on heating equipment, observe precautions in literature, on tags, and on labels attached to or shipped with furnace and other safety precautions that may apply.

These instructions cover minimum requirements and conform to existing national standards and safety codes. In some instances, these instructions exceed certain local codes and ordinances, especially those that may not have kept up with changing residential construction practices. We require these instructions as a minimum for a safe installation.

**⚠ CAUTION**

**CUT HAZARD**

Failure to follow this caution may result in personal injury.

Sheet metal parts may have sharp edges or burrs. Use care and wear appropriate protective clothing, safety glasses and gloves when handling parts and servicing furnaces.

Wear safety glasses and work gloves. Have fire extinguisher available during start-up and adjustment procedures and service calls.

This is the safety-alert symbol ⚠ . When you see this symbol on the furnace and in instructions or manuals, be alert to the potential for personal injury.

Understand the signal words DANGER, WARNING, and CAUTION. These words are used with the safety-alert symbol. DANGER identifies the most serious hazards which **will** result in severe personal injury or death. WARNING signifies a hazard which **could** result in personal injury or death. CAUTION is used to identify hazards which **may** result in minor personal injury or product and property damage. NOTE is used to highlight suggestions which will result in enhanced installation, reliability, or operation.

1. Use only with type of gas approved for this furnace. Refer to the furnace rating plate.
2. Install this furnace only in a location and position as specified in the "Location" section of these instructions.
3. Provide adequate combustion and ventilation air to the furnace space as specified in "Air for Combustion and Ventilation" section.
4. Combustion products must be discharged outdoors. Connect this furnace to an approved vent system only, as specified in

## → Table 1—Dimensions (IN.)

| FURNACE SIZE | A CABINET WIDTH | D SUPPLY-AIR WIDTH (IN.) | E RETURN-AIR WIDTH (IN.) | F C.L. TOP AND BOTTOM FLUE COLLAR (IN.) | FLUE COLLAR* (IN.) | SHIP WT (LB) | FILTER MEDIA CABINET SIZE (IN.) |
|---|---|---|---|---|---|---|---|
| **045-08/024045** | 14-3/16 | 12-9/16 | 12-11/16 | 9-5/16 | 4 | 114 | 16 |
| **045-12/036045** | 14-3/16 | 12-9/16 | 12-11/16 | 9-5/16 | 4 | 117 | 16 |
| **070-08/024070** | 14-3/16 | 12-9/16 | 12-11/16 | 9-5/16 | 4 | 121 | 16 |
| **070-12/036070** | 14-3/16 | 12-9/16 | 12-11/16 | 9-5/16 | 4 | 125 | 16 |
| **070-16/048070** | 17-1/2 | 15-7/8 | 16 | 11-9/16 | 4 | 136 | 16 |
| **090-14/042090** | 17-1/2 | 15-7/8 | 16 | 11-9/16 | 4 | 135 | 16 |
| **090-16/048090** | 21 | 19-3/8 | 19-1/2 | 13-5/16 | 4 | 150 | 20 |
| **090-20/060090** | 21 | 19-3/8 | 19-1/2 | 13-5/16 | 4 | 156 | 20 |
| **110-12/036110** | 17-1/2 | 15-7/8 | 16 | 11-9/16 | 4 | 143 | 16 |
| **110-16/048110** | 21 | 19-3/8 | 19-1/2 | 13-5/16 | 4 | 156 | 20 |
| **110-22/066110** | 21 | 19-3/8 | 19-1/2 | 13-5/16 | 4 | 162 | 20 |
| **135-16/048135** | 21 | 19-3/8 | 19-1/2 | 13-5/16 | 4 | 159 | 20 |
| **135-22/066135** | 24-1/2 | 22-7/8 | 23 | 15-1/16 | 4 | 173 | 24 |
| **155-20/060155** | 24-1/2 | 22-7/8 | 23 | 15-1/16 | 4 | 180 | 24 |

* 5” or 6” vent connector may be required in some cases.

the “Venting” section of these instructions.

5. Never test for gas leaks with an open flame. Use a commercially available soap solution made specifically for the detection of leaks to check all connections, as specified in the “Gas Piping” section.
6. Always install furnace to operate within the furnace’s intended temperature-rise range with a duct system which has an external static pressure within the allowable range, as specified in the “Start-Up, Adjustments, and Safety Check” section. See furnace rating plate.
7. When a furnace is installed so that supply ducts carry air circulated by the furnace to areas outside the space containing the furnace, the return air shall also be handled by duct(s) sealed to the furnace casing and terminating outside the space containing the furnace. See “Air Ducts” section.
8. A gas-fired furnace for installation in a residential garage must be installed as specified in the warning box in the “Location” section.
9. → The furnace is not to be used for temporary heating of buildings or structures under construction. See page 7 caution box regarding the heating of building under construction.
10. These Multipoise Gas-Fired Furnaces are CSA (formerly A.G.A. and C.G.A.) design-certified for use with natural and propane gases (see furnace rating plate) and for installation in alcoves, attics, basements, closets, utility rooms, crawlspaces, and garages. The furnace is factory-shipped for use with natural gas. A CSA listed gas conversion kit is required to convert furnace for use with propane gas.
11. See Fig. 2 for required clearances to combustible construction.
12. Maintain a 1-in. clearance from combustible materials to supply air ductwork for a distance of 36 inches horizontally from the furnace. See NFPA 90B or local code for further requirements.
13. These furnaces SHALL NOT be installed directly on carpeting, tile, or any other combustible material other than wood flooring. In downflow installations, factory accessory floor base MUST be used when installed on combustible materials and wood flooring. Special base is not required when this furnace is installed on manufacturer’s Coil Assembly Part No. CD5 or CK5, or when Coil Box Part No. KCAKC is used. See Fig. 2 for clearance to combustible construction information.

## INTRODUCTION

→ Series 120/C 4–way multipoise Category I fan-assisted furnace is CSA design-certified. A Category I fan-assisted furnace is an appliance equipped with an integral mechanical means to either draw or force products of combustion through the combustion chamber and/or heat exchanger. The furnace is factory-shipped for use with natural gas. This furnace is **not** approved for installation in mobile homes, recreational vehicles, or outdoors.

This furnace is designed for minimum continuous return-air temperature of 60°F db or intermittent operation down to 55°F db such as when used with a night setback thermostat. Return-air temperature must not exceed 85°F db. Failure to follow these return-air temperature limits may affect reliability of heat exchangers, motors, and controls. (See Fig. 3.)

For accessory installation details, refer to the applicable instruction literature.

**NOTE:** Remove all shipping brackets and materials before operating the furnace.

## CODES AND STANDARDS

**Follow all national and local codes and standards in addition to these instructions.** The installation must comply with regulations of the serving gas supplier, local building, heating, plumbing, and other codes. In absence of local codes, the installation must comply with the national codes listed below and all authorities having jurisdiction.

In the United States and Canada, follow all codes and standards for the following:

### Step 1—Safety

- US: National Fuel Gas Code (NFGC) NFPA 54–2002/ANSI Z223.1–2002 and the Installation Standards, Warm Air Heating and Air Conditioning Systems ANSI/NFPA 90B
- → CANADA: CSA B149.1-00 National Standard of Canada Natural Gas and Propane Installation Codes (NSCNGPIC)

## INSTALLATION

**MINIMUM INCHES CLEARANCE TO COMBUSTIBLE CONSTRUCTION**
**DISTANCE MINIMALE EN POUCES AUX CONSTRUCTIONS COMBUSTIBLES**

This forced air furnace is equipped for use with natural gas at altitudes 0-10,000 ft (0-3,050m).

An accessory kit, supplied by the manufacturer, shall be used to convert to propane gas use or may be required for some natural gas applications.

This furnace is for indoor installation in a building constructed on site.

This furnace may be installed on combustible flooring in alcove or closet at minimum clearance as indicated by the diagram from combusitble material.

This furnace may be used with a Type B-1 Vent and may be vented in common with other gas fired appliances.

Cette fournaise à air pulsé est équipée pour utilisation avec gaz naturel et altitudes comprises entre 0-3,050m (0-10,000 pi).

Utiliser une trousse de conversion, fournie par le fabricant, pour passer au gaz propane ou pour certaines installations au gaz naturel.

Cette fournaise est prévue pour être installée dans un bâtiment construit sur place.

Cette fournaise peut être installée sur un plancher combustible dans une alcôve ou dans un garde-robe en respectant le minimum d'espace libre des matériaux combustibles, tel qu´indiqué sur le diagramme.

Cette fournaise peut être utilisée avec un conduit d´évacuation de Type B-1 ou connectée au conduit ommun d 'autres appareils à gaz.

This furnace is approved for UPFLOW, DOWNFLOW, and HORIZONTAL installations.

Cette fournaise est approuvée pour l 'installation HORIZONTALE et la circulation d 'air VERS LE HAUT et VERS LE BAS.

Clearance arrows do not change with furnace orientation.

Les fléches de dégagement ne change pas avec l 'orientation de la fournaise.

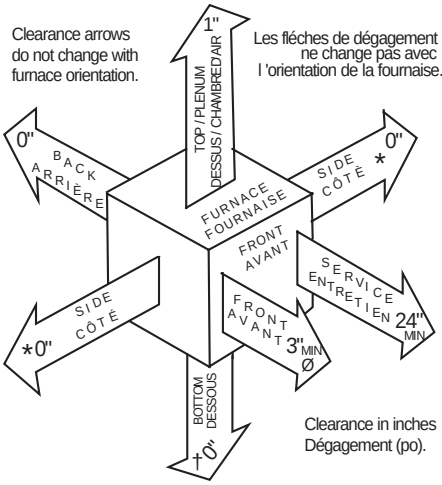


Clearance in inches
Dégagement (po).

Vent Clearance to combustibles:
For Single Wall vents 6 inches (6 po).
For Type B-1 vent type 1 inch (1 po).

Dégagement de l´évent avec combustibles:
Pour conduit d´évacuation à paroi simple 6 po (6 inches).
Pour conduit d´évacuation de Type B-1 1 po (1 inch).

### MINIMUM INCHES CLEARANCE TO COMBUSTIBLE CONSTRUCTION

**DOWNFLOW POSITIONS:**

† Installation on non-combusibible floors only.
For Installation on combustible flooring only when installed on special base, Part No. KGASB0201ALL, Coil Assembly, Part No. CD5 or CK5, or Coil Casing, Part No. KCAKC.

Ø 18 inches front clearance required for alcove.

* Indicates supply or return sides when furnace is in the horizontal position. Line contact only permissible between lines formed by intersections of the Top and two Sides of the furnace jacket, and building joists, studs or framing.

### DÉGAGEMENT MINIMUM EN POUCES AVEC ÉLÉMENTS DE CONSTRUCTION COMBUSTIBLES

**POUR LA POSITION COURANT DESCENDANT:**

† Pour l´installation sur plancher non combustible seulement.
Pour l´installation sur un plancher combustible seulement quand on utilise la base spéciale, pièce nº KGASB0201ALL, l´ensemble serpentin, pièce nº CD5 ou CK5, ou le carter de serpentin, pièce nº KCAKC.

Ø Dans une alcôve, on doit maintenir un dégagement à l´avant de 18 po (450mm).

* La poistion indiquée concerne le côté d´entrée ou de retour quand la fournaise est dans la position horizontale.
Le contact n´est permis qu´entre les lignes formées par les intersections du dessus et des deux côtés de la cherrise de la fournaise et les solives, montant sous cadre de charpente.

**327590-101 REV. C**

A04123

→ **Fig. 2—Clearances to Combustibles**

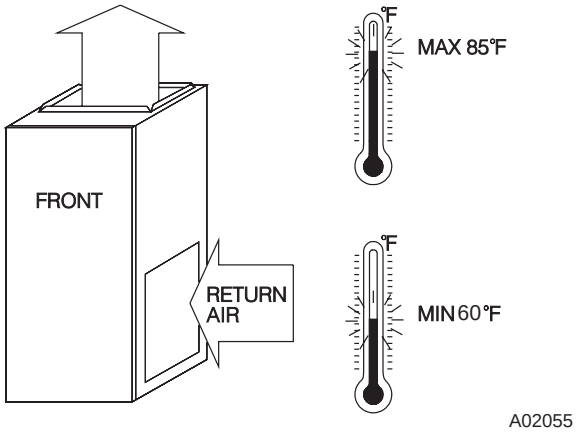


**Fig. 3—Return Air Temperature**

### Step 2—General Installation

- US: Current edition of the NFGC and the NFPA 90B. For copies, contact the National Fire Protection Association Inc., Batterymarch Park, Quincy, MA 02269; (www.NFPA.org) or for only the NFGC, contact the American Gas Association, 400 N. Capitol Street, N.W., Washington, DC 20001 (www.AGA.org).
- CANADA: NSCNGPIC. For a copy, contact Standard Sales, CSA International, 178 Rexdale Boulevard, Etobicoke (Toronto), Ontario, M9W 1R3 Canada

### Step 3—Combustion and Ventilation Air

- US: Section 8.3 of the NFGC, Air for Combustion and Ventilation
- CANADA: Part 7 of NSCNGPIC, Venting Systems and Air Supply for Appliances

### Step 4—Duct Systems

→ • US and CANADA: Air Conditioning Contractors Association (ACCA) Manual D, Sheet Metal and Air Conditioning Contractors National Association (SMACNA), or American Society of Heating, Refrigeration, and Air Conditioning Engineers (ASHRAE) 2001 Fundamentals Handbook Chapter 34 or 2000 HVAC Systems and Equipment Handbook Chapters 9 and 16.

### Step 5—Acoustical Lining and Fibrous Glass Duct

- US and CANADA: current edition of SMACNA and NFPA 90B as tested by UL Standard 181 for Class I Rigid Air Ducts

### Step 6—Gas Piping and Gas Pipe Pressure Testing

- US: NFGC; chapters 5, 6, 7, and 12 and National Plumbing Codes
- CANADA: NSCNGPIC Parts 3, 4, and 5, and Appendices A, B, E, and H.

### Step 7—Electrical Connections

- US: National Electrical Code (NEC) ANSI/NFPA 70–2002
- CANADA: Canadian Electrical Code CSA C22.1

### → Step 8—Venting

- US: NFGC; chapters 10 and 13
- CANADA: NSCNGPIC Part 7 and Appendix C

## ELECTROSTATIC DISCHARGE (ESD) PRECAUTIONS PROCEDURE

**⚠ CAUTION**

→ **FURNACE RELIABILITY HAZARD**

Improper installation or service of furnace may cause premature furnace component failure.

Electrostatic discharge can affect electronic components. Follow the Electrostatic Discharge Precautions Procedure listed below during furnace installation and servicing to protect the furnace electronic control. Precautions will prevent electrostatic discharges from personnel and hand tools which are held during the procedure. These precautions will help to avoid exposing the control to electrostatic discharge by putting the furnace, the control, and the person at the same electrostatic potential.

1. Disconnect all power to the furnace. Multiple disconnects may be required. DO NOT TOUCH THE CONTROL OR **ANY** WIRE CONNECTED TO THE CONTROL PRIOR TO DISCHARGING YOUR BODY'S ELECTROSTATIC CHARGE TO GROUND.
2. Firmly touch the clean, unpainted, metal surface of the furnace chassis which is close to the control. Tools held in a person's hand during grounding will be satisfactorily discharged.
3. After touching the chassis, you may proceed to service the control or connecting wires as long as you do nothing to recharge your body with static electricity (for example; DO NOT move or shuffle your feet, do not touch ungrounded objects, etc.).
4. If you touch ungrounded objects (and recharge your body with static electricity), firmly touch a clean, unpainted metal surface of the furnace again before touching control or wires.
5. Use this procedure for installed and uninstalled (ungrounded) furnaces.
6. Before removing a new control from its container, discharge your body's electrostatic charge to ground to protect the control from damage. If the control is to be installed in a furnace, follow items 1 through 4 before bringing the control or yourself in contact with the furnace. Put all used and new controls into containers before touching ungrounded objects.
7. An ESD service kit (available from commercial sources) may also be used to prevent ESD damage.

## LOCATION

GENERAL

This multipoise furnace is shipped in packaged configuration. Some assembly and modifications are required when used in any of the four applications shown in Fig. 4.

This furnace must:

- be installed so the electrical components are protected from water.
- **not** be installed directly on any combustible material other than wood flooring (refer to SAFETY CONSIDERATIONS).
- be located as close to the chimney or vent and attached to an air distribution system. Refer to Air Ducts section.
- be provided ample space for servicing and cleaning. Always comply with minimum fire protection clearances shown on the furnace clearance to combustible label.

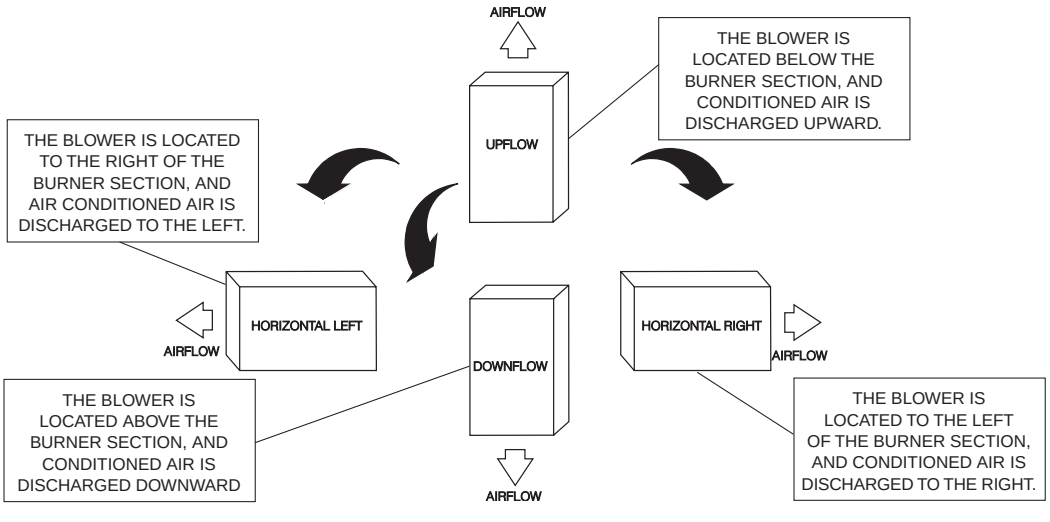


**Fig. 4—Multipoise Orientations**

**⚠ WARNING**

→ **CARBON MONOXIDE POISONING HAZARD**
Failure to follow this warning could result in personal injury or death, and unit component damage.
Corrosive or contaminated air may cause failure of parts containing flue gas, which could leak into the living space.
Air for combustion must not be contaminated by halogen compounds, which include fluoride, chloride, bromide, and iodide. These elements can corrode heat exchangers and shorten furnace life. Air contaminants are found in aerosol sprays, detergents, bleaches, cleaning solvents, salts, air fresheners, and other household products. Do not install furnace in a corrosive or contaminated atmosphere. Make sure all combustion and circulating air requirements are met, in addition to all local codes and ordinances.

→ The following types of furnace installations may require OUTDOOR AIR for combustion due to chemical exposures:

- Commercial buildings
- Buildings with indoor pools
- Laundry rooms
- Hobby or craft rooms, and
- Chemical storage areas

→ If air is exposed to the following substances, it should not be used for combustion air, and outdoor air may be required for combustion:

- Permanent wave solutions
- Chlorinated waxes and cleaners
- Chlorine based swimming pool chemicals
- Water softening chemicals
- De-icing salts or chemicals
- Carbon tetrachloride
- Halogen type refrigerants
- Cleaning solvents (such as perchloroethylene)
- Printing inks, paint removers, varnishes, etc.
- Hydrochloric acid
- Cements and glues
- Antistatic fabric softeners for clothes dryers
- Masonry acid washing materials

All fuel-burning equipment must be supplied with air for fuel combustion. Sufficient air **must** be provided to avoid negative pressure in the equipment room or space. A positive seal **must** be made between the furnace cabinet and the return-air duct to prevent pulling air from the burner area and from draft safeguard opening.

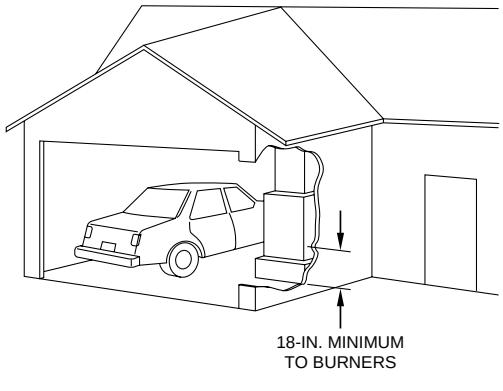


**Fig. 5—Installation in a Garage**

**⚠ WARNING**

**FIRE, INJURY OR DEATH HAZARD**
Improper location or inadequate protection could result in fire or explosion.
When the furnace is installed in a residential garage, the burners and ignition sources must be located at least 18 inches above the floor. The furnace must be located or protected to avoid damage by vehicles. When the furnace is installed in a public garage, airplane hangar, or other building having a hazardous atmosphere, the furnace must be installed in accordance with the NFGC or NSCNGPIC. (See Fig. 5.)

**⚠ CAUTION**

→ **PERSONAL INJURY AND/OR PROPERTY DAMAGE HAZARD**

Improper use or installation of this furnace may cause premature furnace component failure.

This gas furnace may be used for heating buildings under construction provided that:

-The furnace is permanently installed with all electrical wiring, piping, venting and ducting installed according to these installation instructions. A return air duct is provided, sealed to the furnace casing, and terminated outside the space containing the furnace. This prevents a negative pressure condition as created by the circulating air blower, causing a flame rollout and/or drawing combustion products into the structure.

-The furnace is controlled by a thermostat. It may not be ″hot wired″ to provide heat continuously to the structure without thermostatic control.

-Clean outside air is provided for combustion. This is to minimize the corrosive effects of adhesives, sealers and other construction materials. It also prevents the entrainment of drywall dust into combustion air, which can cause fouling and plugging of furnace components.

-The temperature of the return air to the furnace is maintained between 55°F (13°C) and 80°F (27°C), with no evening setback or shutdown. The use of the furnace while the structure is under construction is deemed to be intermittent operation per our installation instructions.

-The air temperature rise is within the rated rise range on the furnace rating plate, and the gas input rate has been set to the nameplate value.

-The filters used to clean the circulating air during the construction process must be either changed or thoroughly cleaned prior to occupancy.

-The furnace, ductwork and filters are cleaned as necessary to remove drywall dust and construction debris from all HVAC system components after construction is completed.

-Verify proper furnace operating conditions including ignition, gas input rate, air temperature rise, and venting according to these installation instructions.

**⚠ WARNING**

→ **FIRE, INJURY, OR DEATH HAZARD**

Failure to follow this warning could result in unsafe furnace operation.

Do not install the furnace on its back or hang furnace with control compartment facing downward. Safety control operation will be adversely affected. Never connect return-air ducts to the back of the furnace. (See Fig. 6.)

LOCATION RELATIVE TO COOLING EQUIPMENT

The cooling coil must be installed parallel with, or on the downstream side of the unit to avoid condensation in the heat exchangers. When installed parallel with the furnace, dampers or other flow control must prevent chilled air from entering the furnace. If the dampers are manually operated, they must be equipped with means to prevent operation of either unit unless the damper is in the full-heat or full-cool position.

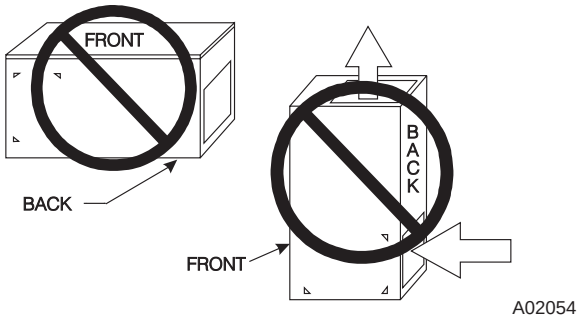


**Fig. 6—Prohibit Installation on Back**

## AIR FOR COMBUSTION AND VENTILATION

Provisions for adequate combustion, ventilation, and dilution air must be provided in accordance with:

- **U.S. installations:** Section 8.3 of the NFGC, Air for Combustion and Ventilation, and applicable provisions of the local building codes.
- **Canadian installations:** Part 7 of the NSCNGPIC, Venting Systems and Air Supply for Appliances, and all authorities having jurisdiction.

**⚠ CAUTION**

→ **FURNACE CORROSION HAZARD**

Failure to follow this caution may result in furnace damage. Air for combustion must not be contaminated by halogen compounds, which include fluoride, chloride, bromide, and iodide. These elements can corrode heat exchangers and shorten furnace life. Air contaminants are found in aerosol sprays, detergents, bleaches, cleaning solvents, salts, air fresheners, and other household products.

**⚠ WARNING**

→ **CARBON MONOXIDE POISONING HAZARD**

Failure to follow this warning could result in personal injury or death.

The operation of exhaust fans, kitchen ventilation fans, clothes dryers, attic exhaust fans or fireplaces could create a NEGATIVE PRESSURE CONDITION at the furnace. Make-up air MUST be provided for the ventilation devices, in addition to that required by the furnace. Refer to Carbon Monoxide Poisoning Hazard warning in venting section of these instructions to determine if an adequate amount of make-up air is available.

→ The requirements for combustion and ventilation air depend upon whether or not the furnace is located in a space having a volume of at least 50 cubic feet per 1,000 Btuh input rating for all gas appliances installed in the space.

- Spaces having less than 50 cubic feet per 1,000 Btuh require the **OUTDOOR COMBUSTION AIR** METHOD.
- Spaces having at least 50 cubic feet per 1,000 Btuh may use the **INDOOR COMBUSTION AIR, STANDARD** or **KNOWN-AIR INFILTRATION** METHOD.

→ **Outdoor Combustion Air** Method

1. Provide the space with sufficient air for proper combustion, ventilation, and dilution of flue gases using permanent horizontal or vertical duct(s) or opening(s) directly communicating with the outdoors or spaces that freely communicate with the outdoors.

→ **Table 2–Minimum Free Area Required for Each Combustion Air Opening or Duct to Outdoors**

| FURNACE INPUT (BTUH) | TWO HORIZONTAL DUCTS (1 SQ. IN./2,000 BTUH) (1,100 SQ. MM/KW) | | SINGLE DUCT OR OPENING (1 SQ. IN./3,000 BTUH) (734 SQ. MM/KW) | | TWO OPENINGS OR VERTICAL DUCTS (1 SQ. IN./4,000 BTUH) (550 SQ. MM/KW) | |
|---|---|---|---|---|---|---|
| | Free Area of Opening and Duct (Sq. In.) | Round Duct (in. Dia) | Free Area of Opening and Duct (sq In.) | Round Duct (in. Dia) | Free Area of Opening and Duct (Sq In.) | Round Duct (In. Dia) |
| **44,000** | 22 | 6 | 14.7 | 5 | 11 | 4 |
| **66,000** | 33 | 7 | 22 | 6 | 16.5 | 5 |
| **88,000** | 44 | 8 | 29.3 | 7 | 22 | 6 |
| **110,000** | 55 | 9 | 36.7 | 7 | 27.5 | 6 |
| **132,000** | 66 | 10 | 44 | 8 | 33 | 7 |
| **154,000** | 77 | 10 | 51.3 | 9 | 38.5 | 8 |

## EXAMPLES: Determining Free Area

| FURNACE | | WATER HEATER | | TOTAL INPUT | | |
|---|---|---|---|---|---|---|
| **110,000** | + | 30,000 | = | (140,000 divided by 4,000) | = | 35.0 Sq. In. for each two Vertical Ducts or Openings |
| **66,000** | + | 40,000 | = | (106,000 divided by 3,000) | = | 35.3 Sq. In. for a Single Duct or Opening |
| **88,000** | + | 30,000 | = | (118,000 divided by 2,000) | = | 59.0 Sq. In. for each of two Horizontal Ducts |

→ **Table 3–Minimum Space Volumes for 100% Combustion, Ventilation, and Dilution from Indoors**

| ACH | OTHER THAN FAN-ASSISTED TOTAL (1,000'S BTUH GAS INPUT RATE) | | | FAN-ASSISTED TOTAL (1,000'S BTUH GAS INPUT RATE) | | | | | |
|---|---|---|---|---|---|---|---|---|---|
| | 30 | 40 | 50 | 44 | 66 | 88 | 110 | 132 | 154 |
| | Space Volume ($ft^3$) | | | | | | | | |
| **0.60** | 1,050 | 1,400 | 1,750 | 1,100 | 1,650 | 2,200 | 2,750 | 3,300 | 3,850 |
| **0.50** | 1,260 | 1,680 | 2,100 | 1,320 | 1,980 | 2,640 | 3,300 | 3,960 | 4,620 |
| **0.40** | 1,575 | 2,100 | 2,625 | 1,650 | 2,475 | 3,300 | 4,125 | 4,950 | 5,775 |
| **0.30** | 2,100 | 2,800 | 3,500 | 2,200 | 3,300 | 4,400 | 5,500 | 6,600 | 7,700 |
| **0.20** | 3,150 | 4,200 | 5,250 | 3,300 | 4,950 | 6,600 | 8,250 | 9,900 | 11,550 |
| **0.10** | 6,300 | 8,400 | 10,500 | 6,600 | 9,900 | 13,200 | 16,500 | 19,800 | 23,100 |
| **0.00** | NP | NP | NP | NP | NP | NP | NP | NP | NP |

NP = Not Permitted

2. Fig. 7 illustrates how to provide TWO OUTDOOR OPENINGS, one inlet and one outlet combustion and ventilation air opening, to the outdoors.
   a. One opening **MUST** commence within 12″ (300 mm) of the ceiling and the second opening **MUST** commence within 12″ (300 mm) of the floor.
   b. Size openings and ducts per Fig. 7 and Table 2.
   c. TWO HORIZONTAL DUCTS require 1 square inch of free area per 2,000 Btuh (1,100 $mm^2$/kW) of combined input for all gas appliances in the space per Fig. 7 and Table 2.
   d. TWO OPENINGS OR VERTICAL DUCTS require 1 square inch of free area per 4,000 Btuh (550 $mm^2$/kW) for combined input of all gas appliances in the space per Fig. 7 and Table 2.
3. ONE OUTDOOR OPENING requires:
   a. 1 square inch of free area per 3,000 Btuh (734 $mm^2$/kW) for combined input of all gas appliances in the space per Table 2 and
   b. Not less than the sum of the areas of all vent connectors in the space.

The opening shall commence within 12″ (300 mm) of the ceiling. Appliances in the space shall have clearances of at least 1″ (25 mm) from the sides and back and 6″ (150 mm) from the front. The opening shall directly communicate with the outdoors or shall communicate through a vertical or horizontal duct to the outdoors or spaces (crawl or attic) that freely communicate with the outdoors.

**Indoor Combustion Air**© NFPA & AGA

→ **Standard** and **Known-Air-Infiltration Rate** Methods

**Indoor air** is permitted for combustion, ventilation, and dilution, if the **Standard** or **Known-Air-Infiltration** Method is used.

**⚠ WARNING**

**CARBON MONOXIDE POISONING HAZARD**
Failure to supply outdoor air via grilles or ducts could result in death and/or personal injury.
Many homes require air to be supplied from outdoors for furnace combustion, ventilation, and dilution of flue gases. The furnace combustion air supply must be provided in accordance with this instruction manual.

The **Standard** Method:

1. The space has no less volume than 50 cubic feet per 1,000 Btuh of the maximum input ratings for all gas appliances installed in the space and
2. The air infiltration rate is not known to be less than 0.40 air changes per hour (ACH).

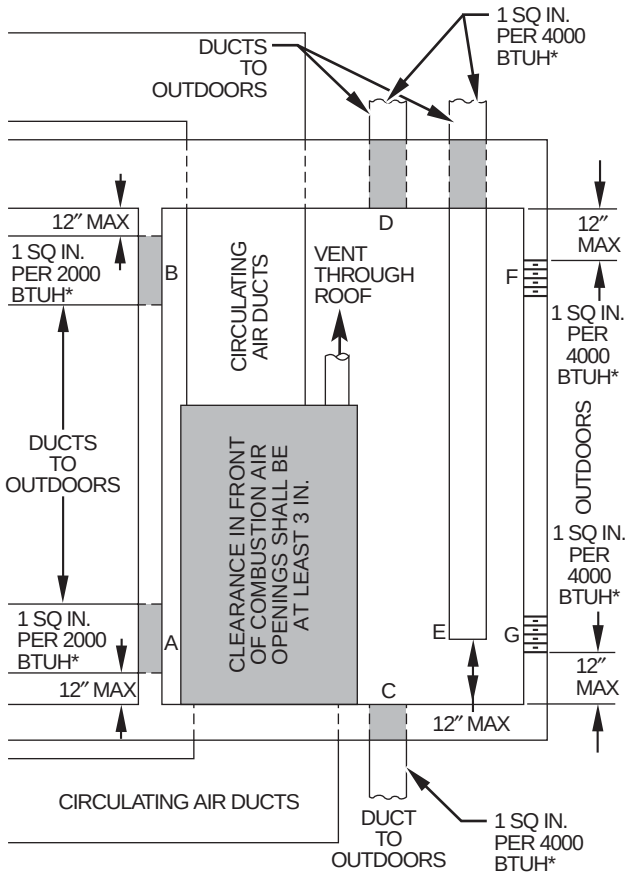


*Minimum dimensions of 3 in.

**NOTE:** Use any of the following combinations of openings:
A & B C & D D & E F & G

A03174

## → Fig. 7—Air for Combustion, Ventilation, and Dilution for Outdoors

The **Known Air Infiltration Rate** Method shall be used, if the infiltration rate is known to be:

1. Less than 0.40 ACH and
2. Equal to or greater than 0.10 ACH

Infiltration rates greater than 0.60 ACH shall not be used. The minimum required volume of the space varies with the number of ACH and shall be determined per Table 3 or Equations 1 and 2. Determine the minimum required volume for each appliance in the space and add the volumes together to get the total minimum required volume for the space.

**Table 3-Minimum Space Volumes** were determined by using the following equations from the *National Fuel Gas Code ANSI Z223.1-2002/NFPA 54-2002,8.3.2.2*:

1. For **other than fan-assisted appliances**, such as a draft hood-equipped water heater:

$$\text{Volume}_{\text{Other}} = \frac{21\text{ft}^3}{\text{ACH}}\left(\frac{I_{\text{other}}}{1000\ \text{Btu/hr}}\right)$$

A04002

2. For **fan-assisted appliances** such as this furnace:

$$\text{Volume}_{\text{Fan}} = \frac{15\text{ft}^3}{\text{ACH}}\left(\frac{I_{\text{fan}}}{1000\ \text{Btu/hr}}\right)$$

A04003

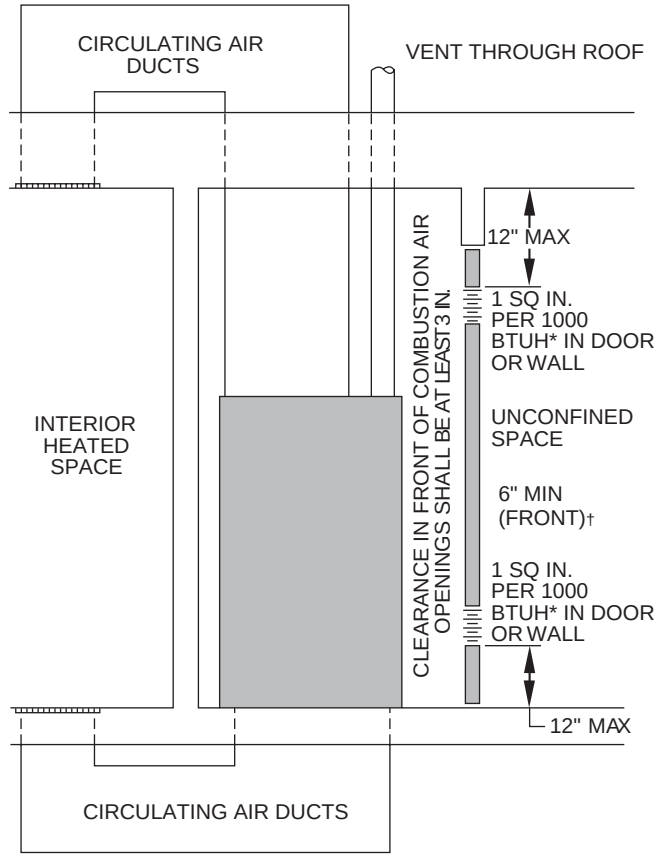


* Minimum opening size is 100 sq in. with minimum dimensions of 3 in.

† Minimum of 3 in. when type-B1 vent is used.

A03175

## → Fig. 8—Air for Combustion, Ventilation, and Dilution from Indoors

If:

$I_{other}$ = combined input of all **other than fan-assisted appliances** in Btu/hr

$I_{fan}$ = combined input of all **fan-assisted appliances** in Btu/hr

ACH = air changes per hour (ACH shall not exceed 0.60.)

→ The following requirements apply to the **Standard** Method and to the **Known Air Infiltration Rate** Method.

1. Adjoining rooms can be considered part of a space if:
   a. There are no closable doors between rooms.
   b. Combining spaces on same floor level. Each opening shall have free area of at least 1 in.$^2$/1,000 Btuh (2,000 mm$^2$/kW) of the total input rating of all gas appliances in the space, but not less than 100 in.$^2$ (0.06 m$^2$). One opening shall commence within 12″ (300 mm) of the ceiling and the second opening shall commence within 12″ (300 mm) of the floor. The minimum dimension of air openings shall be at least 3 in. (80 mm). (See Fig. 8.)
   c. Combining space on different floor levels. The volumes of spaces on different floor levels shall be considered as communicating spaces if connected by one or more permanent openings in doors or floors having free area of at least 2 in.$^2$/1,000 Btuh (4,400 mm$^2$/kW) of total input rating of all gas appliances.
2. An attic or crawlspace may be considered a space that freely communicates with the outdoors provided there are adequate permanent ventilation openings directly to outdoors having

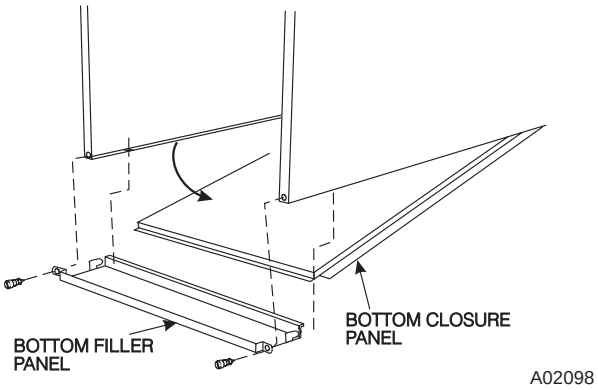


**Fig. 9—Removing Bottom Closure Panel**

free area of at least 1-in.$^2$/4,000 Btuh of total input rating for all gas appliances in the space.

3. In spaces that use the **Indoor Combustion Air** Method, infiltration should be adequate to provide air for combustion, permanent ventilation and dilution of flue gases. However, in buildings with unusually tight construction, additional air MUST be provided using the methods described in the **Outdoor Combustion Air** Method section.

   Unusually tight construction is defined as
   Construction with:

   a. Walls and ceilings exposed to the outdoors have a continuous, sealed vapor barrier. Openings are gasketed or sealed and

   b. Doors and openable windows are weatherstripped and

   c. Other openings are caulked or sealed. These include joints around window and door frames, between sole plates and floors, between wall-ceiling joints, between wall panels, at penetrations for plumbing, electrical and gas lines, etc.

→ **Combination of Indoor and Outdoor Air**

1. Indoor openings shall comply with the **Indoor Combustion Air** Method below and,
2. Outdoor openings shall be located as required in the **Outdoor Combustion Air** Method mentioned previously and,
3. Outdoor openings shall be sized as follows:

   a. Calculate the Ratio of all Indoor Space volume divided by required volume for **Indoor Combustion Air** Method below.

   b. Outdoor opening size reduction **Factor** is 1 minus the **Ratio** in a. above.

   c. Minimum size of Outdoor openings shall be the size required in **Outdoor Combustion Air** Method above multiplied by reduction **Factor** in b. above. The minimum dimension of air openings shall be not less than 3 in. (80 mm).

## INSTALLATION

UPFLOW INSTALLATION

Bottom Return Air Inlet

These furnaces are shipped with bottom closure panel installed in bottom return-air opening. Remove and discard this panel when bottom return air is used. To remove bottom closure panel, perform the following:

1. Tilt or raise furnace and remove 2 screws holding bottom filler panel. (See Fig. 9.)
2. Rotate bottom filler panel downward to release holding tabs.

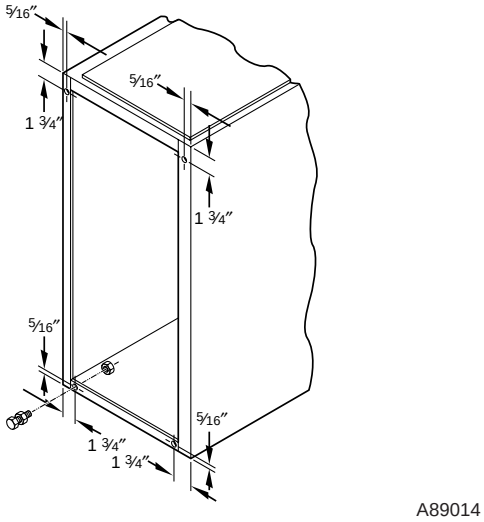


**Fig. 10—Leveling Legs**

3. Remove bottom closure panel.
4. Reinstall bottom filler panel and screws.

Side Return Air Inlet

These furnaces are shipped with bottom closure panel installed in bottom return-air opening. This panel MUST be in place when only side return air is used.

**NOTE:** Side return-air openings can be used in UPFLOW and most HORIZONTAL configurations. Do not use side return-air openings in DOWNFLOW configuration.

Leveling Legs (If Desired)

In upflow position with side return inlet(s), leveling legs may be used. (See Fig. 10.) Install field-supplied, 5/16 X 1-1/2 in. (max) corrosion-resistant machine bolts, washers and nuts.

**NOTE:** Bottom closure must be used when leveling legs are used. It may be necessary to remove and reinstall bottom closure panel to install leveling legs. To remove bottom closure panel, see Item 1. in Bottom Return Air Inlet section.

To install leveling legs:

1. Position furnace on its back. Locate and drill a hole in each bottom corner of furnace. (See Fig. 10.)
2. For each leg, install nut on bolt and then install bolt and nut in hole. (Install flat washer if desired.)
3. Install another nut on other side of furnace base. (Install flat washer if desired.)
4. Adjust outside nut to provide desired height, and tighten inside nut to secure arrangement.
5. Reinstall bottom closure panel if removed.

DOWNFLOW INSTALLATION

**NOTE:** For downflow applications, this furnace is approved for use on combustible flooring when any one of the following 3 accessories are used:

- Special Base, KGASB
- Cased Coil Assembly Part No. CD5 or CK5
- Coil Box Part No. KCAKC

1. Determine application being installed from Table 3.
2. Construct hole in floor per Table 3 and Fig. 11.
3. Construct plenum to dimensions specified in Table 3 and Fig. 11.

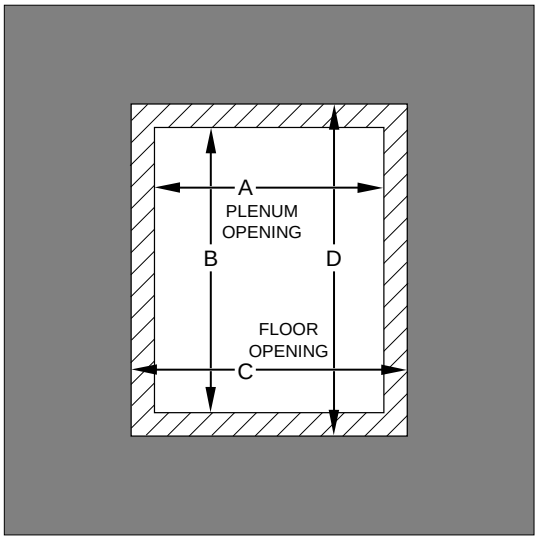


A96283

**Fig. 11—Floor and Plenum Opening Dimensions**

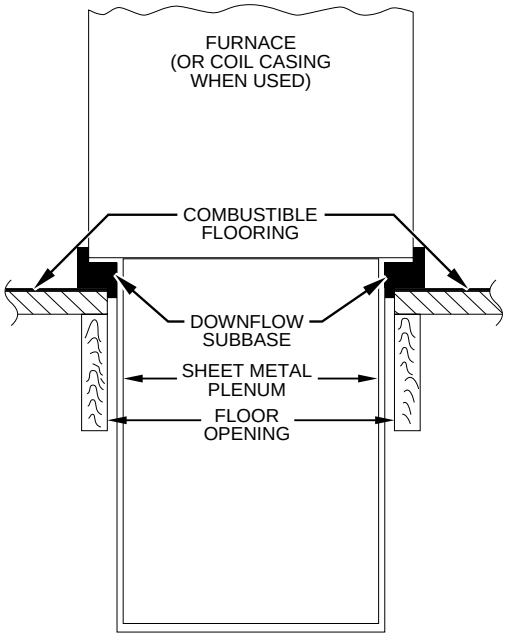


**Fig. 12—Furnace, Plenum, and Subbase Installed on a Combustible Floor**

A96285

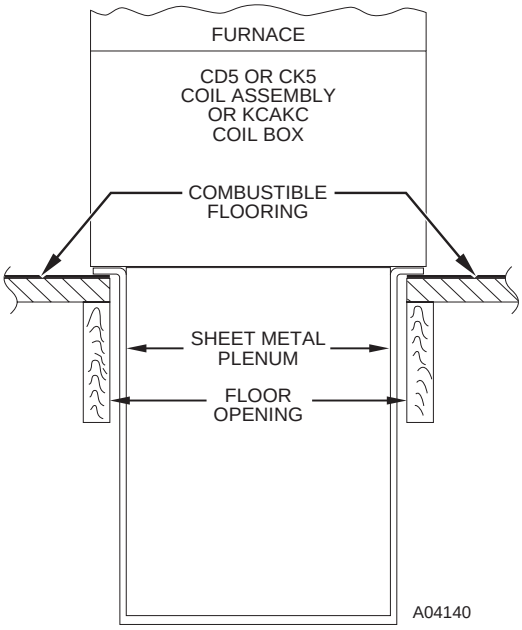


A04140

→ **Fig. 13—Furnace, Plenum, and Coil Assembly or Coil Box Installed on a Combustible Floor**

4. If downflow subbase, KGASB is used, install as shown in Fig. 12. If Coil Assembly Part No. CD5 or CK5 or Coil Box Part No. KCAKC is used, install as shown in Fig. 13.

**NOTE:** It is recommended that the perforated supply-air duct flanges be completely folded over or removed from furnace when installing the furnace on a factory-supplied cased coil or coil box. To remove the supply-air duct flange, use wide duct pliers or hand seamers to bend flange back and forth until it breaks off. Be careful of sharp edges. (See Fig. 14.)

Bottom Return Air Inlet

These furnaces are shipped with bottom closure panel installed in bottom return-air opening. Remove and discard this panel when bottom return air is used. To remove bottom closure panel, perform the following:

1. Tilt or raise furnace and remove 2 screws holding bottom filler panel. (See Fig. 9.)
2. Rotate bottom filler panel downward to release holding tabs.
3. Remove bottom closure panel.

## Table 4—Opening Dimensions (In.)

| FURNACE CASING WIDTH | APPLICATION | PLENUM OPENING | | FLOOR OPENING | |
|---|---|---|---|---|---|
| | | A | B | C | D |
| 14–3/16 | Upflow Applications on Combustible or Noncombustible Flooring (KGASB subbase not required) | 12-11/16 | 21-5/8 | 13-5/16 | 22-1/4 |
| | Downflow Applications on Noncombustible Flooring (KGASB subbase not required) | 12-9/16 | 19 | 13-3/16 | 19-5/8 |
| | Downflow applications on combustible flooring **(KGASB subbase required)** | 11-13/16 | 19 | 13-7/16 | 20-5/8 |
| | Downflow Applications on Combustible Flooring with CD5 or CK5 Coil Assembly or KCAKC coil box (KGASB subbase not required) | 12-5/16 | 19 | 13-5/16 | 20 |
| 17–1/2 | Upflow Applications on Combustible or Noncombustible Flooring (KGASB subbase not required) | 16 | 21-5/8 | 16-5/8 | 22-1/4 |
| | Downflow Applications on Noncombustible Flooring (KGASB subbase not required) | 15-7/8 | 19 | 16-1/2 | 19-5/8 |
| | Downflow applications on combustible flooring **(KGASB subbase required)** | 15-1/8 | 19 | 16-3/4 | 20-5/8 |
| | Downflow Applications on Combustible Flooring with CD5 or CK5 Coil Assembly or KCAKC coil box (KGASB subbase not required) | 15-1/2 | 19 | 16-1/2 | 20 |
| 21 | Upflow Applications on Combustible or Noncombustible Flooring (KGASB subbase not required) | 19-1/2 | 21-5/8 | 20-1/8 | 22-1/4 |
| | Downflow Applications on Noncombustible Flooring (KGASB subbase not required) | 19-3/8 | 19 | 20 | 19-5/8 |
| | Downflow applications on combustible flooring **(KGASB subbase required)** | 18-5/8 | 19 | 20-1/4 | 20-5/8 |
| | Downflow Applications on Combustible Flooring with CD5 or CK5 Coil Assembly or KCAKC coil box (KGASB subbase not required) | 19 | 19 | 20 | 20 |
| 24-1/2 | Upflow Applications on Combustible or Noncombustible Flooring (KGASB subbase not required) | 23 | 21-1/8 | 23-5/8 | 22-1/4 |
| | Downflow Applications on Noncombustible Flooring (KGASB subbase not required) | 22-7/8 | 19 | 23-1/2 | 19-5/8 |
| | Downflow applications on Combustible flooring **(KGASB subbase required)** | 22-1/8 | 19 | 23-3/4 | 20-5/8 |
| | Downflow Applications on Combustible Flooring with CD5 or CK5 Coil Assembly or KCAKC coil box (KGASB subbase not required) | 22-1/2 | 19 | 23-1/2 | 20 |

4. Reinstall bottom filler panel and screws.

HORIZONTAL INSTALLATION

**⚠ WARNING**

**FIRE, EXPLOSION, AND CARBON MONOXIDE POISONING HAZARD**

Failure to follow this warning could result in dangerous operation, serious injury, death, or property damage.

Do not install the furnace on its back or hang furnace with control compartment facing downward. Safety control operation will be adversely affected. Never connect return-air ducts to the back of the furnace.

The furnace can be installed horizontally in an attic or crawl space on either the left-hand (LH) or right-hand (RH) side. The furnace can be hung from floor joists, rafters or trusses or installed on a non-combustible platform, blocks, bricks or pad.

Suspended Furnace Support

The furnace may be supported under each end with threaded rod, angle iron or metal plumber's strap as shown. (See Fig. 15 and 16.) Secure angle iron to bottom of furnace as shown. Heavy-gauge sheet metal straps (plumber's straps) may be used to suspend the furnace from each bottom corner. To prevent screws from pulling out, use 2 #8 x ¾-in. screws into the side and 2 #8 x ¾-in. screws in the bottom of the furnace casing for each strap. (See Fig. 15 and 16.)

→ If the screws are attached to ONLY the furnace sides and not the bottom, the straps must be vertical against the furnace sides and not pull away from the furnace sides, so that the strap attachment screws are not in tension (are loaded in shear) for reliable support.

Platform Furnace Support

Construct working platform at location where all required furnace clearances are met. (See Fig. 2 and 17.) For furnaces with 1-in. clearance requirement on side, set furnace on noncombustible blocks, bricks or angle iron. For crawl space installations, if the furnace is not suspended from the floor joists, the ground underneath furnace must be level and the furnace set on blocks or bricks.

Roll-Out Protection

Provide a minimum 17-3/4″ X 22″ piece of sheet metal for flame roll-out protection in front of burner area for furnaces closer than 12 inches above the combustible deck or suspended furnaces closer than 12 inches to joists. The sheet metal MUST extend underneath the furnace casing by 1 in. with the door removed.

The bottom closure panel on furnaces of widths 17-1/2 in. and larger may be used for flame roll-out protection when bottom of furnace is used for return air connection. See Fig. 17 for proper orientation of roll-out shield.

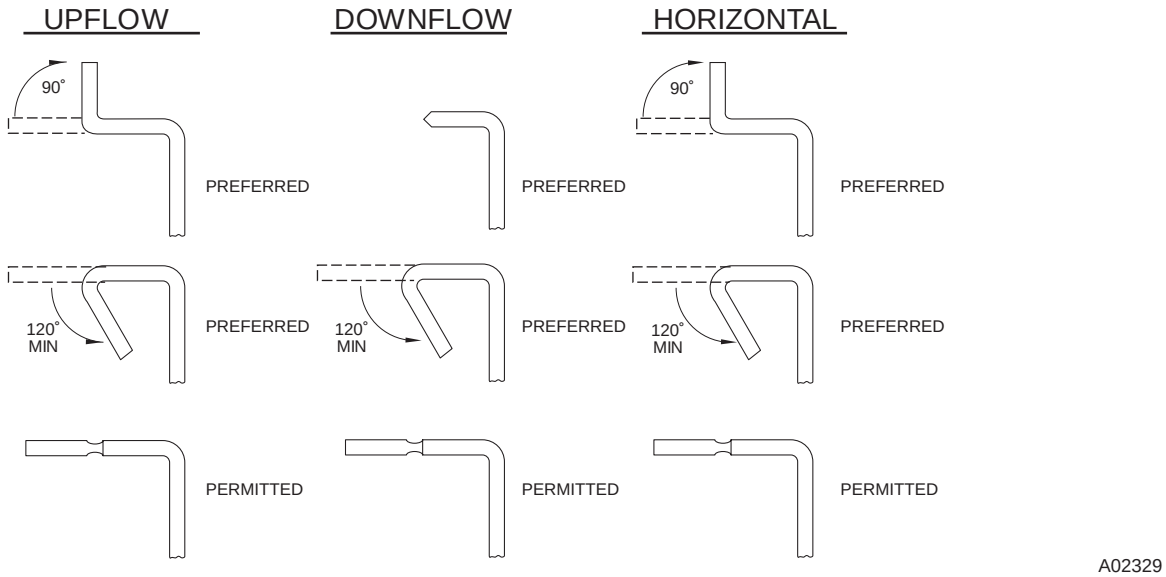


**Fig. 14—Duct Flanges**

Bottom Return Air Inlet

These furnaces are shipped with bottom closure panel installed in bottom return-air opening. Remove and discard this panel when bottom return air is used. To remove bottom closure panel, perform the following:

1. Tilt or raise furnace and remove 2 screws holding bottom filler panel. (See Fig. 9.)
2. Rotate bottom filler panel downward to release holding tabs.
3. Remove bottom closure panel.
4. Reinstall bottom filler panel and screws.

Side Return Air Inlet

These furnaces are shipped with bottom closure panel installed in bottom return-air opening. This panel MUST be in place when side return air inlet(s) is used without a bottom return air inlet.

Not all horizontal furnaces are approved for side return air connections. (See Fig. 20.)

FILTER ARRANGEMENT

**⚠ WARNING**

**FIRE, CARBON MONOXIDE AND POISONING HAZARD**

Failure to follow this warning could result in fire, personal injury, or death.

Never operate a furnace without a filter or with filter access door removed.

There are no provisions for an internal filter rack in these furnaces.

Deluxe furnaces are shipped with a factory supplied Media Filter Cabinet. The Media Filter Cabinet uses either the factory-supplied standard 1–in. filter or a 4–in. wide Media Filter which can be purchased separately.

Refer to the instructions supplied with Media Cabinet for assembly and installation options.

AIR DUCTS

General Requirements

The duct system should be designed and sized according to accepted national standards such as those published by: Air Conditioning Contractors Association (ACCA), Sheet Metal and Air Conditioning Contractors National Association (SMACNA) or American Society of Heating, Refrigerating and Air Conditioning Engineers (ASHRAE) or consult *The Air Systems Design Guidelines* reference tables available from your local distributor. The duct system should be sized to handle the required system design CFM at the design external static pressure. The furnace airflow rates are provided in Table 5-AIR DELIVERY-CFM (With Filter).

When a furnace is installed so that the supply ducts carry air circulated by the furnace to areas outside the space containing the furnace, the return air shall also be handled by duct(s) sealed to the furnace casing and terminating outside the space containing the furnace.

Secure ductwork with proper fasteners for type of ductwork used. Seal supply- and return-duct connections to furnace with code approved tape or duct sealer.

**NOTE:** Flexible connections should be used between ductwork and furnace to prevent transmission of vibration. Ductwork passing through unconditioned space should be insulated and sealed to enhance system performance. When air conditioning is used, a vapor barrier is recommended.

Maintain a 1-in. clearance from combustible materials to supply air ductwork for a distance of 36 in. horizontally from the furnace. See NFPA 90B or local code for further requirements.

Ductwork Acoustical Treatment

**NOTE:** Metal duct systems that do not have a 90 degree elbow and 10 ft of main duct to the first branch take-off may require internal acoustical lining. As an alternative, fibrous ductwork may be used if constructed and installed in accordance with the latest edition of SMACNA construction standard on fibrous glass ducts. Both acoustical lining and fibrous ductwork shall comply with NFPA 90B as tested by UL Standard 181 for Class 1 Rigid air ducts.

Supply Air Connections

→ For a furnace not equipped with a cooling coil, the outlet duct shall be provided with a removable access panel. This opening shall be accessible when the furnace is installed and shall be of such a size that the heat exchanger can be viewed for possible openings using light assistance or a probe can be inserted for sampling the air stream. The cover attachment shall prevent leaks.

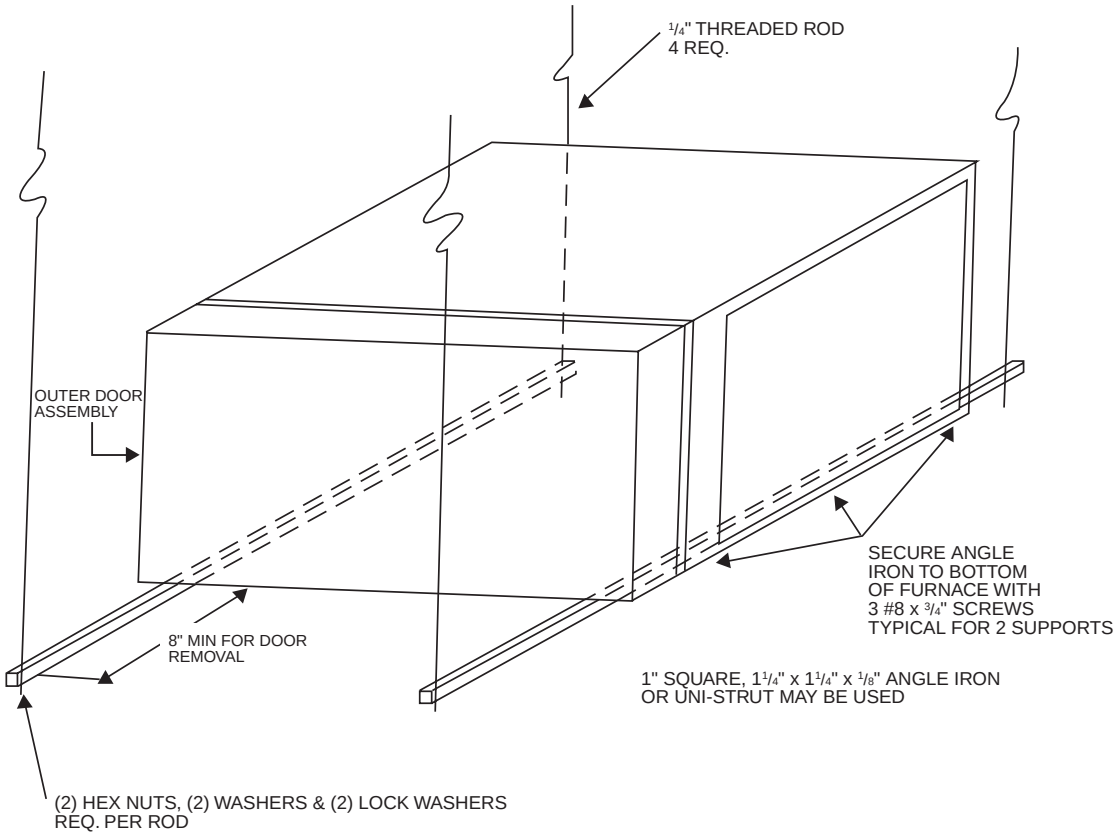


→ **Fig. 15—Horizontal Unit Suspension**

Upflow and Horizontal Furnaces

Connect supply-air duct to flanges on furnace supply-air outlet. Bend flange upward to 90° with wide duct pliers. (See Fig. 14.) The supply-air duct must be connected to ONLY the furnace supply-outlet-air duct flanges or air conditioning coil casing (when used). DO NOT cut main furnace casing side to attach supply air duct, humidifier, or other accessories. All accessories MUST be connected to duct external to furnace main casing.

→ **NOTE:** For horizontal applications, the top-most flange may be bent past 90 degrees to allow the evaporator coil to hang on the flange temporarily while the remaining attachment and sealing of the coil are performed.

Downflow Furnaces

Connect supply-air duct to supply-air outlet on furnace. Bend flange inward past 90° with wide duct pliers. (See Fig. 14.) The supply-air duct must be connected to ONLY the furnace supply-outlet or air conditioning coil casing (when used). When installed on combustible material, supply-air duct must be connected to ONLY the accessory subbase KGASB0201ALL or a factory approved air conditioning coil casing. DO NOT cut main furnace casing to attach supply side air duct, humidifier, or other accessories. All accessories MUST be connected to duct external to furnace casing.

Return Air Connections

**⚠ WARNING**

**FIRE HAZARD**

Failure to follow this warning could cause a fire, personal injury, or death.

Never connect return-air ducts to the back of the furnace. Follow instructions below.

Downflow Furnaces

The return-air duct must be connected to return-air opening (bottom inlet) as shown in Fig. 19. DO NOT cut into casing sides (left or right). Side opening is permitted for only upflow and most horizontal furnaces. (See Fig. 19.) Bypass humidifier connections should be made at ductwork or coil casing sides exterior to furnace.

Upflow and Horizontal Furnaces

The return-air duct must be connected to bottom, sides (left or right), or a combination of bottom and side(s) of main furnace casing as shown in Fig. 18 and 20. Bypass humidifier may be attached into unused return air side of the furnace casing. (See Fig. 18 and 20.)

Not all horizontal furnaces are approved for side return air connections. (See Fig. 20.)

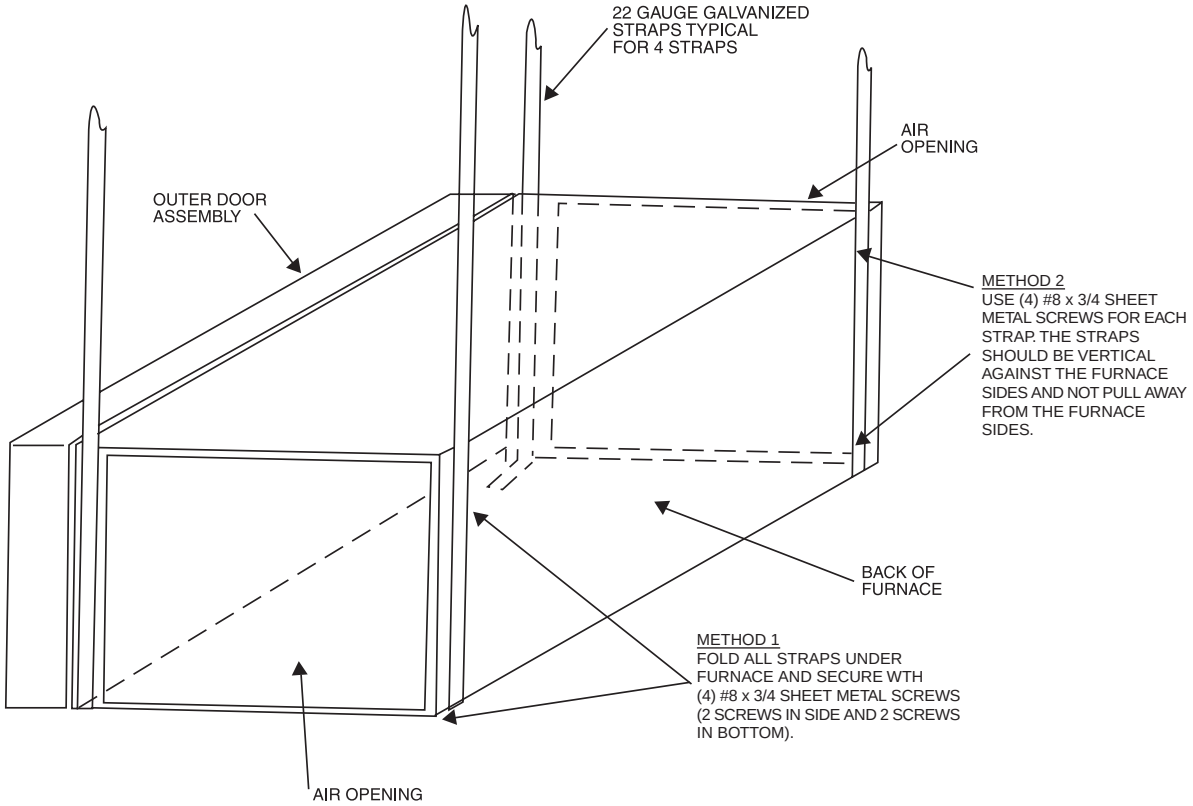


A03176

**Fig. 16—Horizontal Suspension with Straps**

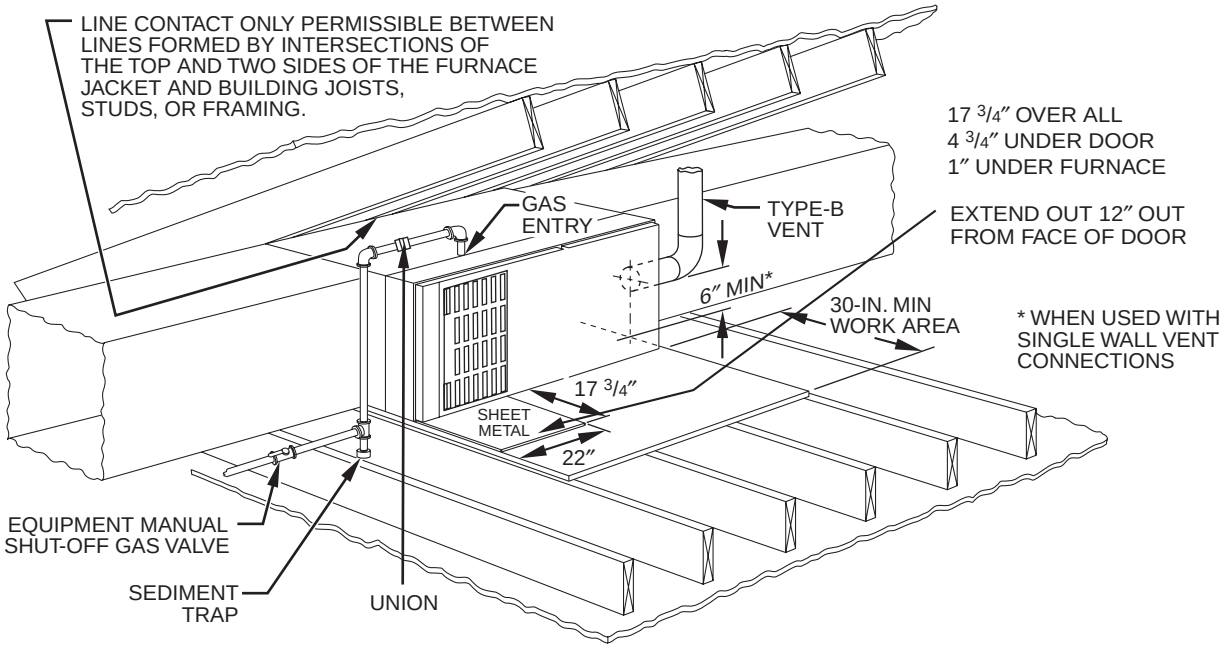


A03177

**Fig. 17—Typical Attic Installation**

→

## Table 5—Air Delivery - CFM (With Filter)*

| FURNACE SIZE | RETURN-AIR INLET | SPEED | EXTERNAL STATIC PRESSURE (IN. WC) | | | | | | | | | |
|---|---|---|---|---|---|---|---|---|---|---|---|---|
| | | | 0.1 | 0.2 | 0.3 | 0.4 | 0.5 | 0.6 | 0.7 | 0.8 | 0.9 | 1.0 |
| **024045** | Bottom or Side(s) | High | 1085 | 1035 | 975 | 915 | 845 | 770 | 675 | 565 | 390 | 195 |
| | | Med-High | 920 | 875 | 830 | 770 | 710 | 640 | 555 | 440 | 250 | -- |
| | | Med-Low | 820 | 775 | 730 | 680 | 620 | 555 | 470 | 360 | 190 | -- |
| **036045** | Bottom or Side(s) | High | 1440 | 1375 | 1305 | 1240 | 1160 | 1070 | 975 | 870 | 730 | 560 |
| | | Med-High | 1360 | 1300 | 1240 | 1175 | 1115 | 1040 | 950 | 850 | 725 | 575 |
| | | Med-Low | 1250 | 1210 | 1160 | 1100 | 1040 | 965 | 885 | 790 | 670 | 520 |
| | | Low | 1085 | 1055 | 1035 | 990 | 945 | 885 | 810 | 715 | 595 | 435 |
| **024070** | Bottom or Side(s) | High | 1030 | 1010 | 980 | 945 | 900 | 845 | 775 | 680 | 490 | 335 |
| | | Med-High | 835 | 815 | 790 | 760 | 720 | 675 | 610 | 490 | 375 | 265 |
| | | Med-Low | 725 | 700 | 675 | 645 | 600 | 555 | 475 | 390 | 300 | -- |
| **036070** | Bottom or Side(s) | High | 1425 | 1375 | 1320 | 1265 | 1200 | 1125 | 1035 | 940 | 830 | 655 |
| | | Med-High | 1320 | 1280 | 1240 | 1205 | 1140 | 1075 | 995 | 905 | 790 | 620 |
| | | Med-Low | 120 | 1175 | 1145 | 1105 | 1050 | 990 | 920 | 840 | 725 | 555 |
| | | Low | 1040 | 1030 | 1010 | 985 | 945 | 895 | 845 | 765 | 655 | 505 |
| **048070** | Bottom or Side(s) | High | 1805 | 1740 | 1670 | 1600 | 1530 | 1445 | 1360 | 1280 | 1180 | 1075 |
| | | Med-High | 1630 | 1585 | 1530 | 1470 | 1405 | 1330 | 1255 | 1170 | 1080 | 990 |
| | | Med-Low | 1460 | 1420 | 1385 | 1325 | 1280 | 1220 | 1155 | 1080 | 995 | 910 |
| | | Low | 1275 | 1250 | 1225 | 1195 | 1155 | 1105 | 1050 | 980 | 910 | 835 |
| **042090** | Bottom or Side(s) | High | 1650 | 1600 | 1535 | 1465 | 1385 | 1285 | 1175 | 1055 | 895 | 645 |
| | | Med-High | 1515 | 1485 | 1440 | 1380 | 1300 | 1220 | 1115 | 990 | 830 | 600 |
| | | Med-Low | 1385 | 1360 | 1320 | 1260 | 1195 | 1120 | 1025 | 915 | 710 | 565 |
| | | Low | 1205 | 1180 | 1160 | 1120 | 1065 | 1005 | 925 | 810 | 630 | 510 |
| **048090** | Bottom or Side(s) | High | 2060 | 1985 | 1915 | 1820 | 1720 | 1610 | 1490 | 1340 | 1135 | 925 |
| | | Med-High | 1790 | 1765 | 1715 | 1645 | 1560 | 1470 | 1345 | 1195 | 1010 | 820 |
| | | Med-Low | 1505 | 1505 | 1480 | 1440 | 1375 | 1300 | 1190 | 1045 | 890 | 740 |
| | | Low | 1225 | 1225 | 1220 | 1195 | 1155 | 1085 | 985 | 870 | 735 | 620 |
| **060090** | Bottom Only | High | 2405 | 2310 | 2220 | 2130 | 2025 | 1920 | 1790 | 1660 | 1530 | 1350 |
| | | Med-High | 2225 | 2155 | 2080 | 1995 | 1895 | 1785 | 1675 | 1565 | 1420 | 1260 |
| | | Med-Low | 2020 | 1955 | 1880 | 1805 | 1730 | 1630 | 1535 | 1420 | 1275 | 1135 |
| | | Low | 1810 | 1765 | 1715 | 1645 | 1565 | 1480 | 1390 | 1280 | 1145 | 1005 |
| | Both Sides or 1 Side & Bottom | High | 2530 | 2450 | 2365 | 2270 | 2165 | 2065 | 1940 | 1805 | 1670 | 1505 |
| | | Med-High | 2285 | 2215 | 2150 | 2075 | 1985 | 1890 | 1780 | 1660 | 1525 | 1360 |
| | | Med-Low | 1995 | 1945 | 1900 | 1840 | 1770 | 1685 | 1600 | 1480 | 1350 | 1180 |
| | | Low | 1770 | 1740 | 1700 | 1645 | 1575 | 1505 | 1415 | 1325 | 1190 | 1040 |
| | 1 Side Only | High | 2475 | 2395 | 2300 | 2200 | 2090 | 1985 | 1865 | 1730 | 1585 | 1425 |
| | | Med-High | 2260 | 2190 | 2110 | 2035 | 1940 | 1845 | 1735 | 1620 | 1475 | 1325 |
| | | Med-Low | 1950 | 1910 | 1855 | 1795 | 1730 | 1650 | 1555 | 1445 | 1310 | 1150 |
| | | Low | 1730 | 1695 | 1650 | 1600 | 1535 | 1470 | 1385 | 1285 | 1165 | 1000 |
| **036110** | Bottom or Side(s) | High | 1625 | 1575 | 1515 | 1445 | 1355 | 1260 | 1165 | 990 | 785 | 595 |
| | | Med-High | 1510 | 1470 | 1415 | 1355 | 1285 | 1185 | 1070 | 890 | 725 | 530 |
| | | Med-Low | 1360 | 1335 | 1295 | 1250 | 1180 | 1100 | 985 | 810 | 670 | 475 |
| | | Low | 1195 | 1180 | 1155 | 1115 | 1065 | 980 | 860 | 740 | 605 | 410 |
| **048110** | Bottom or Side(s) | High | 2035 | 1965 | 1880 | 1790 | 1680 | 1495 | 1365 | 1215 | 1075 | 875 |
| | | Med-High | 1745 | 1710 | 1650 | 1560 | 1450 | 1340 | 1205 | 1090 | 955 | 750 |
| | | Med-Low | 1530 | 1515 | 1470 | 1400 | 1310 | 1215 | 1095 | 990 | 830 | 670 |
| | | Low | 1270 | 1265 | 1235 | 1195 | 1130 | 1055 | 970 | 875 | 720 | 600 |
| **066110** | Bottom Only | High | 2530 | 2470 | 2400 | 2320 | 2220 | 2115 | 2000 | 1865 | 1730 | 1590 |
| | | Med-High | 2230 | 2205 | 2165 | 2110 | 2035 | 1950 | 1855 | 1740 | 1615 | 1485 |
| | | Med-Low | 1920 | 1900 | 1880 | 1845 | 1795 | 1730 | 1650 | 1555 | 1460 | 1340 |
| | | Low | 1640 | 1650 | 1635 | 1610 | 1575 | 1520 | 1455 | 1375 | 1285 | 1170 |
| | Bottom Sides or 1 Side & Bottom | High | -- | -- | 2415 | 2350 | 2250 | 2145 | 2015 | 1875 | 1715 | 1560 |
| | | Med-High | 2235 | 2200 | 2155 | 2100 | 2040 | 1955 | 1850 | 1740 | 1595 | 1470 |
| | 1 Side Only | High | 2540 | 2495 | 2430 | 2355 | 2265 | 2175 | 2065 | 1935 | 1785 | 1650 |
| | | Med-High | 2125 | 2120 | 2105 | 2060 | 2010 | 1940 | 1840 | 1730 | 1615 | 1485 |

*A filter is required for each return-air inlet. Airflow performance included 1-in. washable filter media such as contained in factory-authorized accessory filter rack. To determine airflow performance without this filter, assume an additional 0.1 in. wc available external static pressure.
-- Indicates unstable operating conditions.

→ **Table 5—Air Delivery - CFM (With Filter)* (Continued)**

| FURNACE SIZE | RETURN-AIR INLET | SPEED | EXTERNAL STATIC PRESSURE (IN. WC) | | | | | | | | | |
|---|---|---|---|---|---|---|---|---|---|---|---|---|
| | | | 0.1 | 0.2 | 0.3 | 0.4 | 0.5 | 0.6 | 0.7 | 0.8 | 0.9 | 1.0 |
| 048135 | Bottom or Side(s) | High | 2090 | 2010 | 1930 | 1835 | 1710 | 1590 | 1470 | 1335 | 1025 | 835 |
| | | Med-High | 1790 | 1755 | 1705 | 1640 | 1550 | 1465 | 1360 | 1210 | 945 | 785 |
| | | Med-Low | 1545 | 1525 | 1500 | 1450 | 1380 | 1315 | 1215 | 1005 | 855 | 670 |
| | | Low | 1325 | 1320 | 1295 | 1265 | 1210 | 1150 | 995 | 865 | 745 | 540 |
| 066135 | Bottom Only | High | 2485 | 2400 | 2310 | 2215 | 2110 | 2000 | 1880 | 1725 | 1535 | 1355 |
| | | Med-High | 2195 | 2150 | 2090 | 2000 | 1920 | 1825 | 1720 | 1565 | 1405 | 1255 |
| | | Med-Low | 1880 | 1850 | 1820 | 1780 | 1715 | 1635 | 1540 | 1415 | 1290 | 1160 |
| | | Low | 1640 | 1635 | 1615 | 1585 | 1530 | 1465 | 1370 | 1255 | 1150 | 1040 |
| | Bottom, Sides or 1 Side & Bottom | High | -- | -- | 2385 | 2305 | 2195 | 2085 | 1960 | 1825 | 1670 | 1465 |
| | | Med-High | 2180 | 2145 | 2060 | 2010 | 1945 | 1865 | 1765 | 1660 | 1515 | 1325 |
| | 1 Side Only | High | -- | -- | 2245 | 2155 | 2055 | 1940 | 1825 | 1695 | 1555 | 1385 |
| | | Med-High | 2135 | 2085 | 2035 | 1975 | 1895 | 1795 | 1685 | 1565 | 1445 | 1265 |
| 060155 | Bottom Only | High | 2465 | 2430 | 2375 | 2305 | 2230 | 2110 | 2000 | 1865 | 1725 | 1545 |
| | | Med-High | 2115 | 2105 | 2075 | 2030 | 1980 | 1910 | 1830 | 1725 | 1590 | 1425 |
| | | Med-Low | 1800 | 1790 | 1770 | 1735 | 1695 | 1640 | 1570 | 1465 | 1345 | 1225 |
| | | Low | 1570 | 1565 | 1550 | 1525 | 1495 | 1445 | 1370 | 1270 | 1175 | 1070 |
| | Both Sides Or 1 Side & Bottom | High | -- | -- | 2375 | 2285 | 2200 | 2105 | 1995 | 1870 | 1730 | 1570 |
| | | Med-High | 2155 | 2135 | 2095 | 2040 | 1975 | 1895 | 1790 | 1685 | 1550 | 1400 |
| | 1 Side Only | High | -- | -- | 2260 | 2180 | 2085 | 1975 | 1865 | 1740 | 1605 | 1455 |
| | | Med-High | 2140 | 2095 | 2040 | 1975 | 1890 | 1810 | 1705 | 1595 | 1480 | 1325 |

*A filter is required for each return-air inlet. Airflow performance included 1-in. washable filter media such as contained in factory-authorized accessory filter rack. To determine airflow performance without this filter, assume an additional 0.1 in. wc available external static pressure.
-- Indicates unstable operating conditions.

GAS PIPING

**⚠ WARNING**

**FIRE OR EXPLOSION HAZARD**
Failure to follow this warning could result in personal injury, death, and/or property damage.
Never purge a gas line into a combustion chamber. Never test for gas leaks with an open flame. Use a commercially available soap solution made specifically for the detection of leaks to check all connections.

→ **⚠ WARNING**

**FIRE OR EXPLOSION HAZARD**
Failure to follow this warning coud result in personal injury, death, and/or property damage.
Use proper length of pipe to avoid stress on gas control manifold and a gas leak.

Gas piping must be installed in accordance with national and local codes. Refer to current edition of NFGC in the U.S., the NSCNG-PIC in Canada.

Installations must be made in accordance with all authorities having jurisdiction. If possible, the gas supply line should be a separate line running directly from meter to furnace.

→ **NOTE:** In the state of Massachusetts:
1. Gas supply connections MUST be performed by a licensed plumber or gas fitter.
2. When flexible connectors are used, the maximum length shall not exceed 36 inches (915 mm).
3. When lever handle type manual equipment shutoff valves are used, they shall be T-handle valves.
4. The use of copper tubing for gas piping is NOT approved by the state of Massachusetts.

Refer to Table 6 for recommended gas pipe sizing. Risers must be used to connect to furnace and to meter. Support all gas piping with appropriate straps, hangers, etc. Use a minimum of 1 hanger every 6 ft. Joint compound (pipe dope) should be applied sparingly and only to male threads of joints. Pipe dope must be resistant to the action of propane gas.

**⚠ WARNING**

→ **FIRE OR EXPLOSION HAZARD**
Failure to follow this warning could result in personal injury, death, and/or property damage.
If local codes allow the use of a flexible gas appliance connector, always use a new listed connector. Do not use a connector which has previously served another gas appliance. Black iron pipe shall be installed at the furnace gas control valve and extend a minimum of 2 in. outside the furnace.

**⚠ CAUTION**

→ **FURNACE OVERHEAT HAZARD**
Failure to follow this caution may result in property damage.
Connect gas pipe to gas valve using a backup wrench to avoid damaging gas controls and burner misalignment.

An accessible manual equipment shutoff valve MUST be installed external to furnace casing and within 6 ft of furnace. A 1/8-in. NPT plugged tapping, accessible for test gauge connection, MUST be installed immediately upstream of gas supply connection to furnace and downstream of manual equipment shutoff valve.

**NOTE:** The furnace gas control valve inlet pressure tap connection is suitable to use as test gauge connection providing test pressure DOES NOT exceed maximum 0.5 psig (14-in. wc) stated on gas control valve. (See Fig. 52.)

Some installations require gas entry on right side of furnace (as viewed in upflow.) (See Fig. 21a.)

Install a sediment trap in riser leading to furnace as shown in Fig 21b. Connect a capped nipple into lower end of tee. Capped nipple should extend below level of furnace gas controls. Place a ground joint union between furnace gas control valve and exterior manual equipment gas shutoff valve. A 1/8-in. NPT plugged tapping, accessible for test gauge connection, MUST be installed immediately upstream of gas supply connection to furnace and downstream of manual equipment shutoff valve.

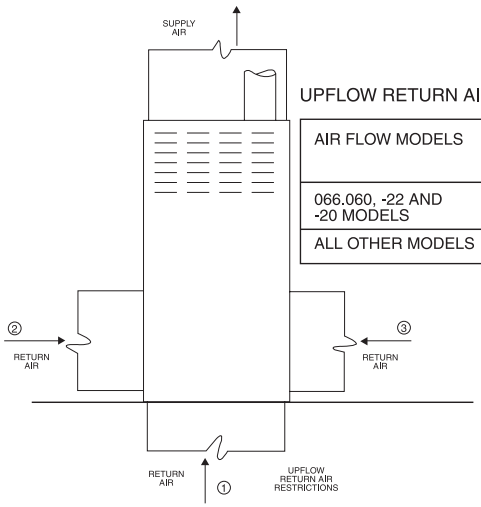


UPFLOW RETURN AIR CONFIGURATIONS AND RESTRICTIONS

| AIR FLOW MODELS | RETURN AIR CONNECTION 1 ONLY | RETURN AIR CONNECTION 2 ONLY | RETURN AIR CONNECTION 3 ONLY | RETURN AIR COMBINATIONS OF 1, 2, AND 3 |
|---|---|---|---|---|
| 066.060, -22 AND -20 MODELS | YES | YES | YES | YES |
| ALL OTHER MODELS | YES | YES | YES | YES |

A02075

**Fig. 18—Upflow Return Air Configurations and Restrictions**

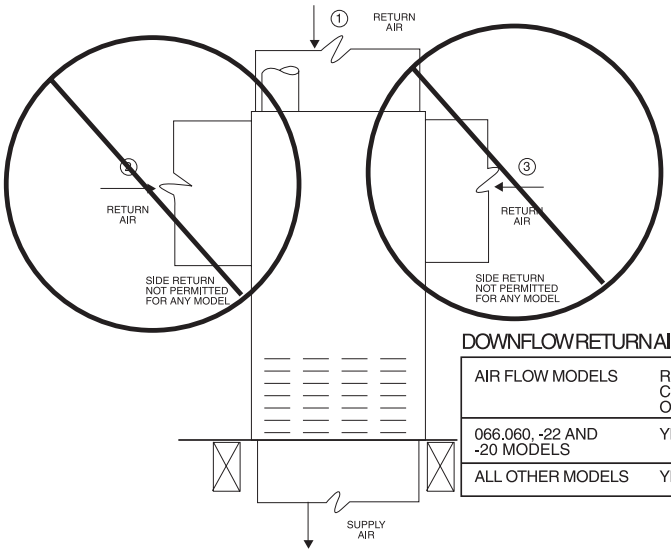


DOWNFLOW RETURN AIR CONFIGURATIONS AND RESTRICTIONS

| AIR FLOW MODELS | RETURN AIR CONNECTION 1 ONLY | RETURN AIR CONNECTION 2 ONLY | RETURN AIR CONNECTION 3 ONLY | RETURN AIR COMBINATIONS OF 1, 2, AND 3 |
|---|---|---|---|---|
| 066.060, -22 AND -20 MODELS | YES | NO | NO | NO |
| ALL OTHER MODELS | YES | NO | NO | NO |

A02163

**Fig. 19—Downflow Return Air Configurations and Restrictions**

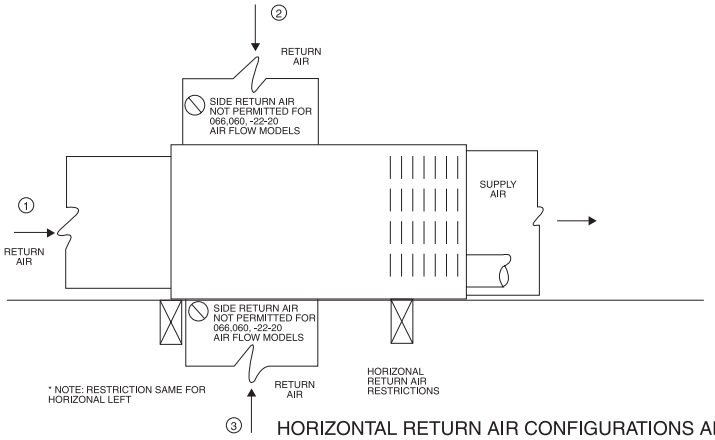


HORIZONTAL RETURN AIR CONFIGURATIONS AND RESTRICTIONS

| AIR FLOW MODELS | RETURN AIR CONNECTION 1 ONLY | RETURN AIR CONNECTION 2 ONLY | RETURN AIR CONNECTION 3 ONLY | RETURN AIR COMBINATIONS OF 1, 2, AND 3 |
|---|---|---|---|---|
| 066.060, -22 AND -20 MODELS | YES | NO | NO | NO |
| ALL OTHER MODELS | YES | YES | YES | YES |

A02162

**Fig. 20—Horizontal Return Air Configurations and Restrictions**

**Table 6—Maximum Capacity of Pipe***

| NOMINAL IRON PIPE SIZE (IN.) | INTERNAL DIAMETER (IN.) | LENGTH OF PIPE (FT) | | | | |
|---|---|---|---|---|---|---|
| | | 10 | 20 | 30 | 40 | 50 |
| **1/2** | 0.622 | 175 | 120 | 97 | 82 | 73 |
| **3/4** | 0.824 | 360 | 250 | 200 | 170 | 151 |
| **1** | 1.049 | 680 | 465 | 375 | 320 | 285 |
| **1-1/4** | 1.380 | 1400 | 950 | 770 | 660 | 580 |
| **1-1/2** | 1.610 | 2100 | 1460 | 1180 | 990 | 900 |

* Cubic ft of natural gas per hr for gas pressures of 0.5 psig (14–in. wc) or less and a pressure drop of 0.5–in wc (based on a 0.60 specific gravity gas).
Ref: Table 12.2 ANSI Z223-2002/NFPA 54-2002.

TOP VIEW OF BURNER AND MANIFOLD ASSEMBLY

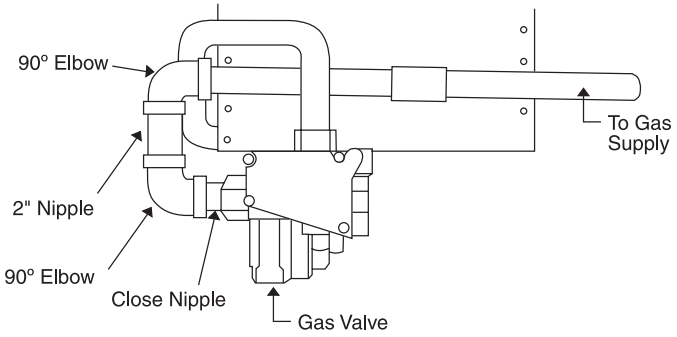


A05028

→ **Fig. 21a—Burner and Manifold**

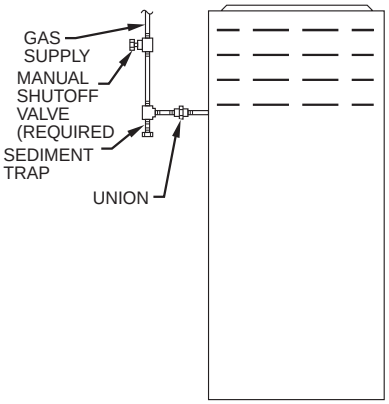


A02035

**Fig. 21b—Typical Gas Pipe Arrangement**

Piping should be pressure and leak tested in accordance with NFGC in the United States or NSCNGPIC in Canada, local, and national plumbing and gas codes before the furnace has been connected. After all connections have been made, purge lines and check for leakage at furnace prior to operating furnace.

→ If pressure exceeds 0.5 psig (14-in. wc), gas supply pipe must be disconnected from furnace and capped before and during supply pipe pressure test. If test pressure is equal to or less than 0.5 psig (14-in. wc), turn off electric shutoff switch located on furnace gas control valve and accessible manual equipment shutoff valve before and during supply pipe pressure test. After all connections have been made, purge lines and check for leakage at furnace prior to operating furnace.

The gas supply pressure shall be within the maximum and minimum inlet supply pressures marked on the rating plate with the furnace burners ON and OFF.

ELECTRICAL CONNECTIONS

**⚠ WARNING**

**ELECTRICAL SHOCK HAZARD**
Failure to follow this warning could result in serious personal injury or death.
Blower access panel door switch opens 115-v power to control. No component operation can occur. Do not bypass or close switch with panel removed.

See Fig. 25 for field wiring diagram showing typical field 115-v wiring. Check all factory and field electrical connections for tightness.

Field-supplied wiring shall conform with the limitations of 63°F (33°C) rise.

**⚠ WARNING**

**ELECTRICAL SHOCK AND FIRE HAZARD**
Failure to follow this warning could result in serious injury, death, or property damage.
The cabinet MUST have an uninterrupted or unbroken ground according to NEC ANSI/NFPA 70-2002 and Canadian Electrical Code CSA C22.1 or local codes to minimize personal injury if an electrical fault should occur. This may consist of electrical wire, conduit approved for electrical ground or a listed, grounded power cord (where permitted by local code) when installed in accordance with existing electrical codes. Refer to the power cord manufacturer's ratings for proper wire gauge. Do not use gas piping as an electrical ground.

**⚠ CAUTION**

→ **FURNACE MAY NOT OPERATE**
Failure to follow this caution may result in furnace operation stopping and water pipes freezing during cold weather.
Furnace control must be grounded for proper operation or else control will lock out. Control must remain grounded through green/yellow wire routed to gas valve and manifold bracket screw.

115-V WIRING

Verify that the voltage, frequency, and phase correspond to that specified on unit rating plate. Also, check to be sure that service provided by utility is sufficient to handle load imposed by this equipment. Refer to rating plate or Table 7 for equipment electrical specifications.

**U.S. installations:** Make all electrical connections in accordance with National Electrical Code (NEC) ANSI/NFPA 70-2002 and any local codes or ordinances that might apply.

**Canadian installations:** Make all electrical connections in accordance with Canadian Electrical Code CSA C22.1 or authorities having jurisdiction.

**⚠ WARNING**

→ **FIRE HAZARD**
Failure to follow this warning could result in serious injury, death, or property damage.
Do not connect aluminum wire between disconnect switch and furnace. Use only copper wire.

Use a separate, fused branch electrical circuit with a properly sized fuse or circuit breaker for this furnace. See Table 7 for wire size

## → Table 7—Electrical Data

| FURNACE SIZE | VOLTS-HERTZ-PHASE | OPERATING VOLTAGE RANGE | | MAXIMUM UNIT AMPS | UNIT AMPACITY# | MAXIMUM WIRE LENGTH (FT)‡ | MAXIMUM FUSE OR CKT BKR AMPS† | MINIMUM WIRE GAUGE |
|---|---|---|---|---|---|---|---|---|
| | | Maximum* | Minimum* | | | | | |
| **045-08/024045** | 115-60-1 | 127 | 104 | 5.4 | 7.54 | 49 | 15 | 14 |
| **045-12/036045** | 115-60-1 | 127 | 104 | 7.0 | 9.50 | 39 | 15 | 14 |
| **070-08/024070** | 115-60-1 | 127 | 104 | 5.0 | 7.06 | 52 | 15 | 14 |
| **070-12/036070** | 115-60-1 | 127 | 104 | 6.8 | 9.22 | 40 | 15 | 14 |
| **070-16/048070** | 115-60-1 | 127 | 104 | 9.5 | 12.60 | 29 | 15 | 14 |
| **090-14/042090** | 115-60-1 | 127 | 104 | 8.2 | 10.83 | 34 | 15 | 14 |
| **090-16/048090** | 115-60-1 | 127 | 104 | 10.0 | 13.13 | 28 | 15 | 14 |
| **090-20/060090** | 115-60-1 | 127 | 104 | 13.6 | 17.61 | 32 | 20 | 12 |
| **110-12/036110** | 115-60-1 | 127 | 104 | 8.2 | 10.75 | 34 | 15 | 14 |
| **110-16/048110** | 115-60-1 | 127 | 104 | 10.1 | 13.12 | 28 | 15 | 14 |
| **110-22/066110** | 115-60-1 | 127 | 104 | 14.8 | 18.99 | 30 | 20 | 12 |
| **135-16/048135** | 115-60-1 | 127 | 104 | 10.2 | 13.27 | 27 | 15 | 14 |
| **135-22/066135** | 115-60-1 | 127 | 104 | 14.4 | 18.55 | 30 | 20 | 12 |
| **155-20/060155** | 115-60-1 | 127 | 104 | 15.0 | 19.33 | 29 | 20 | 12 |

* Permissible limits of the voltage range at which the unit operates satisfactorily.
\# Unit ampacity = 125 percent of largest operating component's full load amps plus 100 percent of all other potential operating components' (EAC, humidifier, etc.) full load amps.
† Time-delay type is recommended.
‡ Length shown is as measured 1 way along wire path between unit and service panel for maximum 2 percent voltage drop.

and fuse specifications. A readily accessible means of electrical disconnect must be located within sight of the furnace.

**NOTE:** Proper polarity must be maintained for 115-v wiring. If polarity is incorrect, control LED status indicator light will flash rapidly and furnace will NOT operate.

J-BOX RELOCATION

**NOTE:** If factory location of J-Box is acceptable, go to next section (ELECTRICAL CONNECTION TO J-BOX).

**NOTE:** On 14″ wide casing models, the J-Box shall not be relocated to other side of furnace casing when the vent pipe is routed within the casing.

1. Remove and save two screws holding J-Box. (See Fig. 22.)

→ **NOTE:** The J-Box cover need not be removed from the J-Box in order to move the J-Box. Do NOT remove green ground screw inside J-Box. The ground screw is not threaded into the casing flange and can be lifted out of the clearance hole in casing while swinging the front edge of the J-Box outboard of the casing.

2. Cut wire tie on loop in furnace wires attached to J-box.
3. Move J-Box to desired location.
4. Fasten J-Box to casing with two screws removed in Step 1.
5. Route J-Box wires within furnace away from sharp edges, rotating parts and hot surfaces.

ELECTRICAL CONNECTION TO J-BOX

→ Field-Supplied Electrical Box on Furnace J-Box Bracket

See Fig. 23.

1. Remove cover from furnace J-Box.
2. Attach electrical box to furnace J-Box bracket with at least two field-supplied screws through holes in electrical box into holes in bracket. Use blunt-nose screws that will not pierce wire insulation.
3. Route furnace power wires through holes in electrical box and J-Box bracket, and make field-wire connections in electrical box. Use best practices (NEC in U.S. and CSA C22.1 in Canada) for wire bushings, strain relief, etc.
4. Route and secure field ground wire to green ground screw on J-Box bracket.

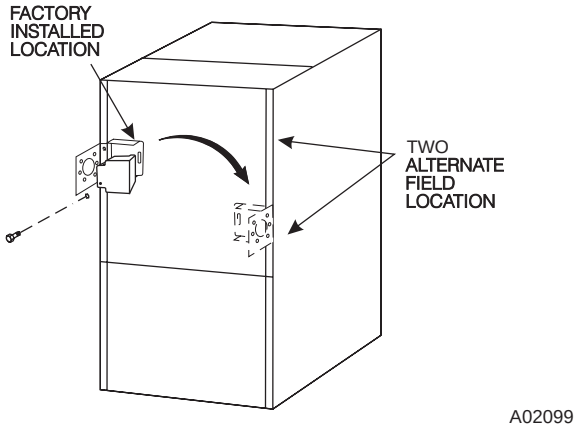


**Fig. 22—Relocating J-Box**

5. Connect line voltage leads as shown in Fig. 25.
6. Reinstall cover to J-Box. Do not pinch wires between cover and bracket.

→ Electrical Box on Furnace Casing Side

See Fig. 23.

**⚠ WARNING**

**FIRE OR ELECTRICAL SHOCK HAZARD**
Failure to follow this warning could result in personal injury, death, or property damage.
If field-supplied manual disconnect switch is to be mounted on furnace casing side, select a location where a drill or fastener cannot damage electrical or gas components.

1. Select and remove a hole knockout in the casing where the electrical box is to be installed.

**NOTE:** Check that duct on side of furnace will not interfere with installed electrical box.

2. Remove the desired electrical box hole knockout and position the hole in the electrical box over the hole in the furnace casing.

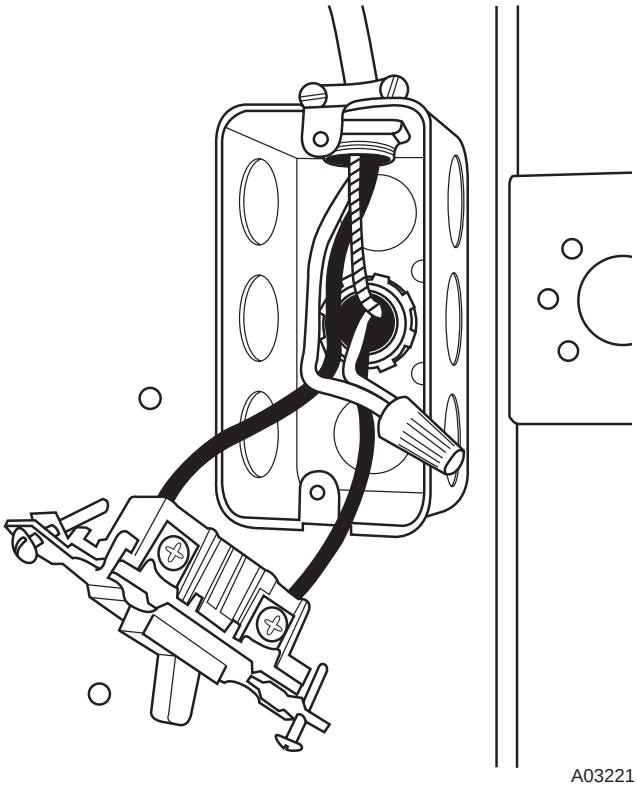


→ **Fig. 23—Field-Supplied Electrical Box on Furnace Casing**

3. Fasten the electrical box to casing by driving two field-supplied screws from inside electrical box into casing steel.
4. Remove and save two screws holding J-Box. (See Fig. 22.)
5. Pull furnace power wires out of 1/2-inch diameter hole in J-Box. Do not loosen wires from strain-relief wire-tie on outside of J-Box.
6. Route furnace power wires through holes in casing and electrical box and into electrical box.
7. Pull field power wires into electrical box.
8. Remove cover from furnace J-Box.
9. Route field ground wire through holes in electrical box and casing, and into furnace J-Box.
10. Reattach furnace J-Box to furnace casing with screws removed in Step 4.
11. Secure field ground wire to J-Box green ground screw.
12. Complete electrical box wiring and installation. Connect line voltage leads as shown in Fig. 25. Use best practices (NEC in U.S. and CSA C22.1 in Canada) for wire bushings, strain relief, etc.
13. Reinstall cover to J-Box. Do not pinch wires between cover and bracket.

POWER CORD INSTALLATION IN FURNACE J-BOX

**NOTE:** Power cords must be able to handle the electrical requirements listed in Table 5. Refer to power cord manufacturer's listings.

→ 1. Remove cover from J-Box.
2. Route listed power cord through 7/8-inch diameter hole in J-Box.
3. Secure power cord to J-Box bracket with a strain relief bushing or a connector approved for the type of cord used.
4. Secure field ground wire to green ground screw on J-Box bracket.
5. Connect line voltage leads as shown in Fig. 25.
→ 6. Reinstall cover to J-Box. Do not pinch wires between cover and bracket.

BX CABLE INSTALLATION IN FURNACE J-BOX

→ 1. Remove cover from J-Box.
2. Route BX cable into 7/8-inch diameter hole in J-Box.
3. Secure BX cable to J-Box bracket with connectors approved for the type of cable used.
4. Secure field ground wire to green ground screw on J-Box bracket.
5. Connect line voltage leads as shown in Fig. 25.
→ 6. Reinstall cover to J-Box. Do not pinch wires between cover and bracket.

24-V WIRING

Make field 24-v connections at the 24-v terminal strip. (See Fig. 23.) Connect terminal Y/Y2 as shown in Fig. 24 for proper cooling operation. Use only AWG No. 18, color-coded, copper thermostat wire.

The 24-v circuit contains an automotive-type, 3-amp fuse located on the control. Any direct shorts during installation, service, or maintenance could cause this fuse to blow. If fuse replacement is required, use ONLY a 3-amp fuse of identical size.

ACCESSORIES

1. Electronic Air Cleaner (EAC)
   Connect an accessory Electronic Air Cleaner (if used) using 1/4-in female quick connect terminals to the two male 1/4-in quick-connect terminals on the control board marked EAC-1 and EAC-2. The terminals are rated for 115 VAC, 1.0 amps maximum and are energized during blower motor operation. (See Fig. 24.)
2. Humidifier (HUM)
   Connect an accessory 24 VAC, 0.5 amp maximum humidifier (if used) to the 1/4-in male quick-connect HUM terminal and COM-24V screw terminal on the control board thermostat strip. The HUM terminal is energized when gas valve relay (GVR) is energized. (See Fig. 24.)

**NOTE:** A field-supplied, 115-v controlled relay connected to EAC terminals may be added if humidifier operation is desired during blower operation.

**NOTE:** DO NOT connect furnace control HUM terminal to HUM (humidifier) terminal on Thermidistat™, Zone Controller or similar device. See Thermidistat™, Zone Controller, thermostat, or controller manufacturer's instructions for proper connection.

VENTING

→ The furnace shall be connected to a listed factory built chimney or vent, or a clay-tile lined masonry or concrete chimney. Venting into an unlined masonry chimney or concrete chimney is prohibited.

→ When an existing Category I furnace is removed or replaced, the original venting system may no longer be sized to properly vent the attached appliances. An improperly sized Category I venting system could cause the formation of condensate in the furnace and vent, leakage of condensate and combustion products, and spillage of combustion products into the living space.

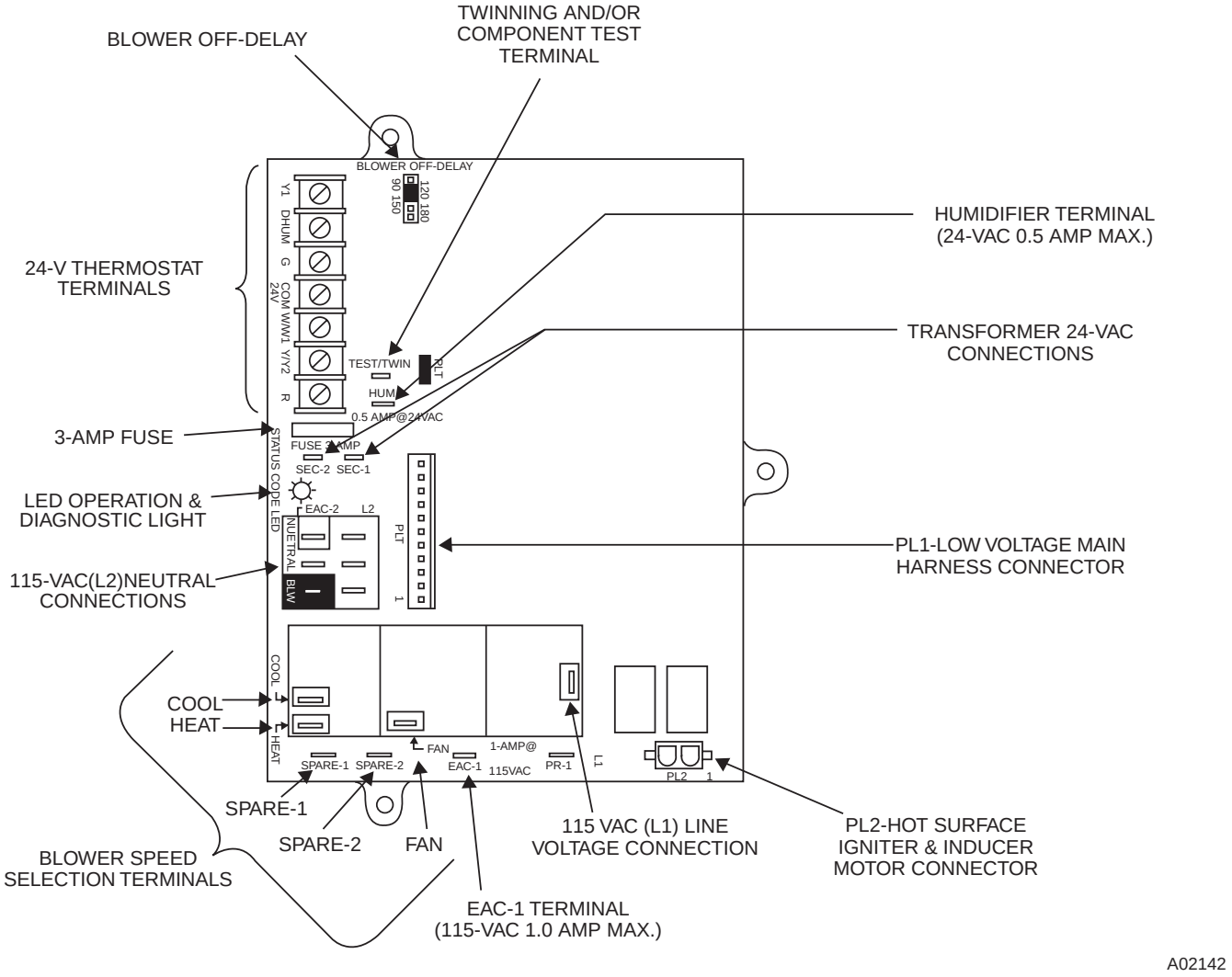


**Fig. 24—Furnace Control**

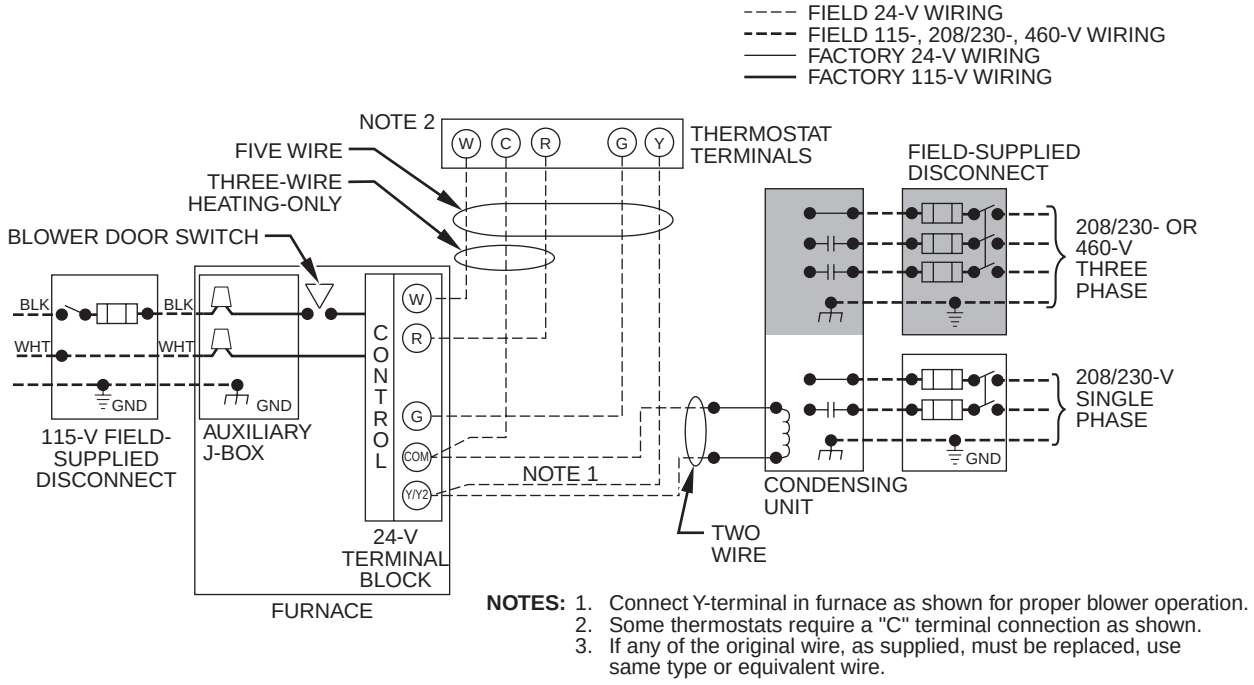


**Fig. 25—Heating and Cooling Application Wiring Diagram with 1–Stage Thermostat**

**⚠ WARNING**

**CARBON MONOXIDE POISONING HAZARD**

Failure to follow the steps outlined below for each appliance connected to the venting system being placed into operation could result in carbon monoxide poisoning or death.

The following steps shall be followed for each appliance connected to the venting system being placed into operation, while all other appliances connected to the venting system are not in operation:

1. Seal any unused openings in venting system.
2. Inspect the venting system for proper size and horizontal pitch, as required in the *National Fuel Gas Code, ANSI Z223.1/NFPA 54* or *CSA B149.1, Natural Gas and Propane Installation Code* and these instructions. Determine that there is no blockage or restriction, leakage, corrosion and other deficiencies, which could cause an unsafe condition.
3. As far as practical, close all building doors and windows and all doors between the space in which the appliance(s) connected to the venting system are located and other spaces of the building.
4. Close fireplace dampers.
5. Turn on clothes dryers and any appliance not connected to the venting system. Turn on any exhaust fans, such as range hoods and bathroom exhausts, so they are operating at maximum speed. Do not operate a summer exhaust fan.
6. Follow the lighting instructions. Place the appliance being inspected into operation. Adjust the thermostat so appliance is operating continuously.
7. Test for spillage from draft hood equipped appliances at the draft hood relief opening after 5 minutes of main burner operation. Use the flame of a match or candle.
8. If improper venting is observed during any of the above tests, the venting system must be corrected in accordance with the *National Fuel Gas Code, ANSI Z223.1/NFPA 54* and/or *CSA B149.1, Natural Gas and Propane Installation Code*.
9. After it has been determined that each appliance connected to the venting system properly vents when tested as outlined above, return doors, windows, exhaust fans, fireplace dampers and any other gas-fired burning appliance to their previous conditions of use.

Vent system or vent connectors may need to be resized. Vent systems or vent connectors, must be sized to approach minimum size as determined using appropriate table found in the NFGC or NSCNGPIC.

GENERAL VENTING REQUIREMENTS

Follow all safety codes for proper vent sizing and installation requirements, including local building codes, the *National Fuel Gas Code ANSI Z223.1-2002/NFPA 54-2002 (NFGC)*, Parts 10 and 13 in the United States or the *National Standard of Canada, Natural Gas and Propane Installation Code* CSA-B149.1-00 (NSCNGPIC), Section 7 and Appendix C in Canada, the local building codes, and furnace and vent manufacturers' instructions.

→ These furnaces are design-certified as Category I furnaces in accordance with ANSI Z21.47-2003/CSA 2.3-2003 and operate with a non-positive vent static pressure to minimize the potential for vent gas leakage. Category I furnaces operate with a flue loss not less than 17 percent to minimize the potential for condensation in the venting system. These furnaces are approved for common venting and multistory venting with other fan assisted or draft hood equipped appliances in accordance with the NFGC or the NSCNGPIC, the local building codes, and furnace and vent manufacturers' instructions.

The following information and warning must be considered in addition to the requirements defined in the NFGC and the NSCNGPIC.

**⚠ WARNING**

**CARBON MONOXIDE POISONING HAZARD**

Failure to follow this warning could result in a build-up of carbon monoxide and lead to personal injury or death.

Do not bypass the draft safeguard switch, as an unsafe condition could exist which must be corrected.

1. If a vent (common or dedicated) becomes blocked, the furnace will be shut off by the draft safeguard switch located on the vent elbow.
2. Do not vent this Category I furnace into a single-wall dedicated or common vent. The dedicated or common vent is considered to be the vertical portion of the vent system that terminates outdoors.
3. Vent connectors serving Category I furnaces shall not be connected into any portion of a mechanical draft system operating under positive pressure.
4. In the U.S.: Do not vent this appliance with any solid fuel burning appliance.
   In Canada: Check with the authority having jurisdiction for approval on use with solid fuel burning appliance.
5. Category I furnaces must be vented vertically or nearly vertically unless equipped with a listed power ventor.
6. Do not vent this appliance into an unlined masonry chimney. Refer to Chimney Inspection Chart, Fig. 32.

MASONRY CHIMNEY REQUIREMENTS

**NOTE:** These furnaces are CSA design-certified for use in exterior tile-lined masonry chimneys with a factory accessory Chimney Adapter Kit. Refer to the furnace rating plate for correct kit usage. The Chimney Adapter Kits are for use with ONLY furnaces having a Chimney Adapter Kit numbers marked on the furnace rating plate.

If a clay tile-lined masonry chimney is being used and it is exposed to the outdoors below the roof line, relining might be required. Chimneys shall conform to the Standard for Chimneys, Fireplaces, Vents, and Soild Fuel Burning Appliances ANSI/NFPA 211-2003 in the United States and to a Provincial or Territorial Building Code in Canada (in its absence, the National Building Code of Canada) and must be in good condition.

**U.S.A.**-Refer to Sections 13.1.9 and 13.2.20 of the NFGC or the authority having jurisdiction to determine whether relining is required. If relining is required, use a properly sized listed metal liner, Type-B vent, or a listed alternative venting design.

**NOTE:** See the NFGC, 13.1.9 and 13.2.20 regarding alternative venting design and the Exception, which cover installations such as the Chimney Adapter Kits KGACA02014FC and KGACA02015FC, which are listed for use with these furnaces.

The Chimney Adapter Kit is listed alternative venting system for these furnaces. See the kit instructions for complete details.

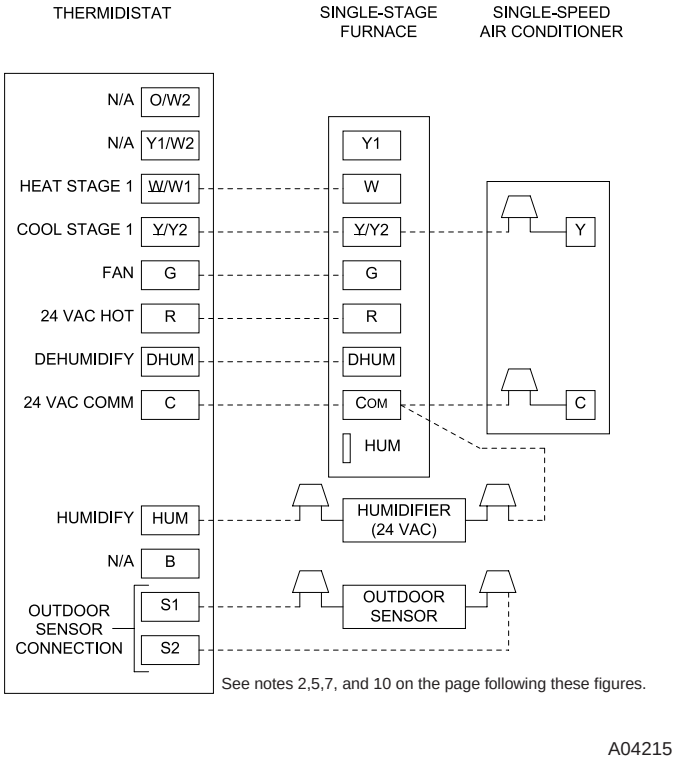


**Fig. 26–Single-Stage Furnace with Single-Speed Air Conditioner**

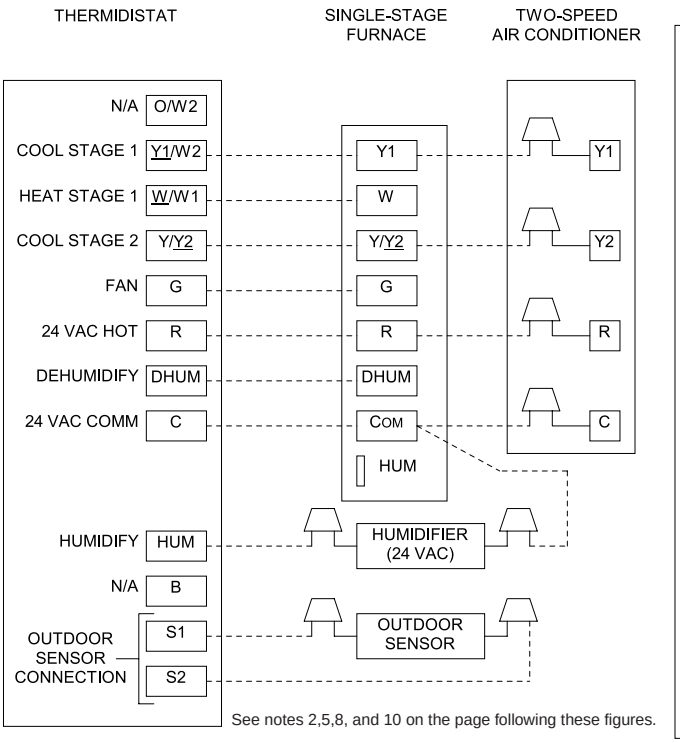


**Fig. 27–Single Stage Furnace with Two-Speed Air Conditioner**

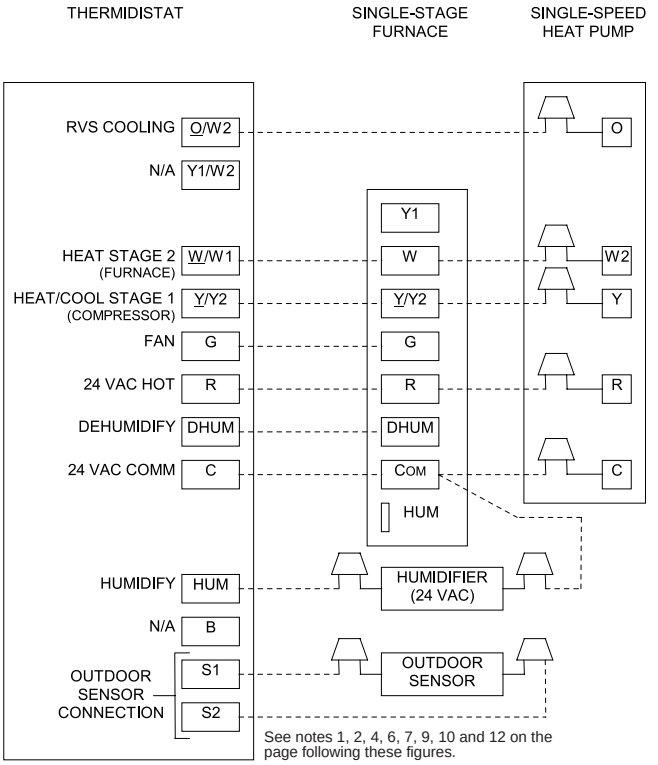


**Fig. 28–Single-Stage Furnace with Single-Speed Heat Pump (Dual Fuel)**

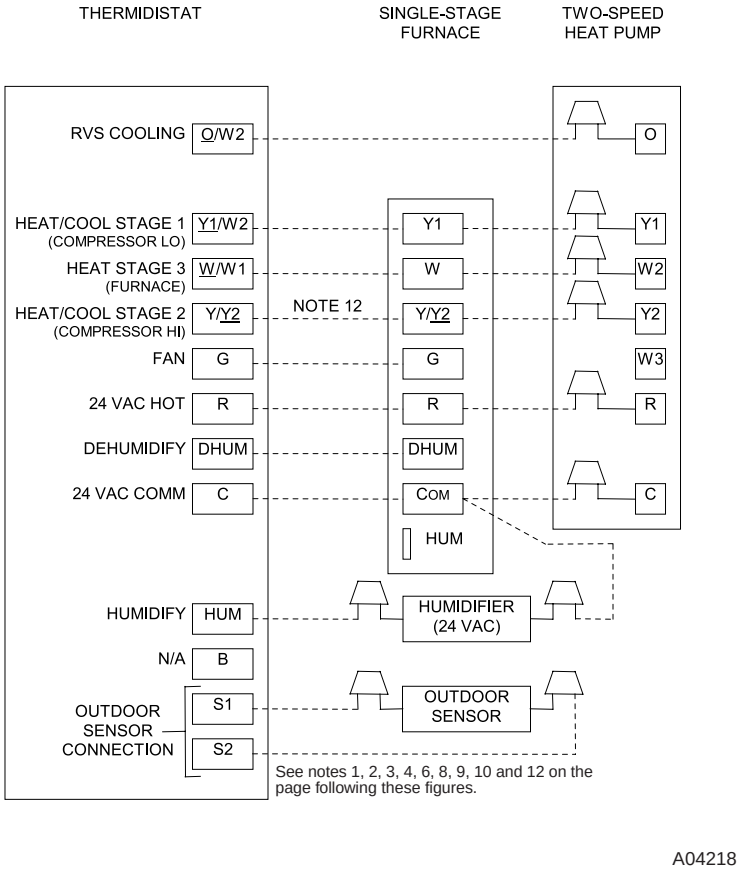


**Fig. 29–Single-Stage Furnace with Two-Speed Heat Pump (Dual Fuel)**

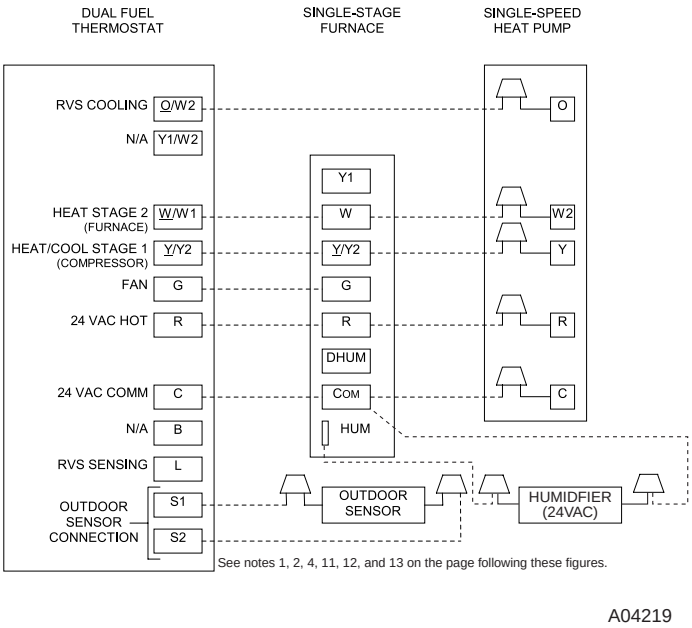


**Fig. 30–Dual Fuel Thermostat with Single-Stage Furnace and Single-Speed Heat Pump**

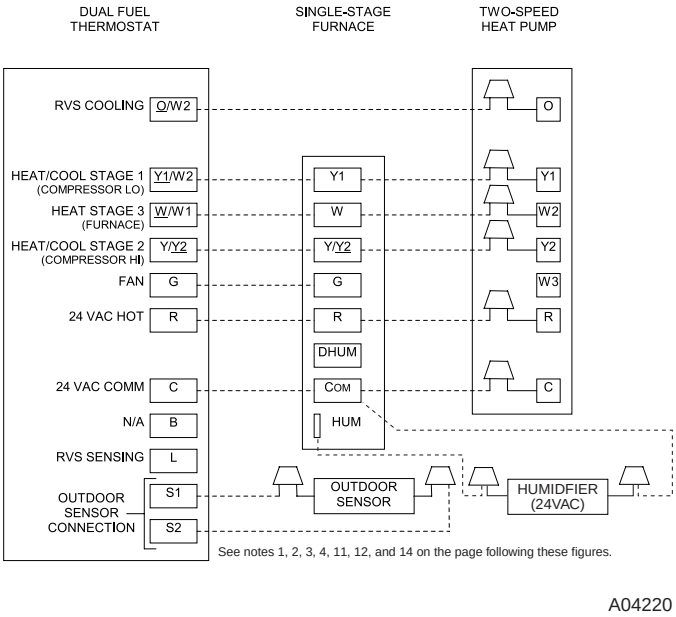


**Fig. 31–Dual Fuel Thermostat with Single-Stage Furnace and Two-Speed Heat Pump**

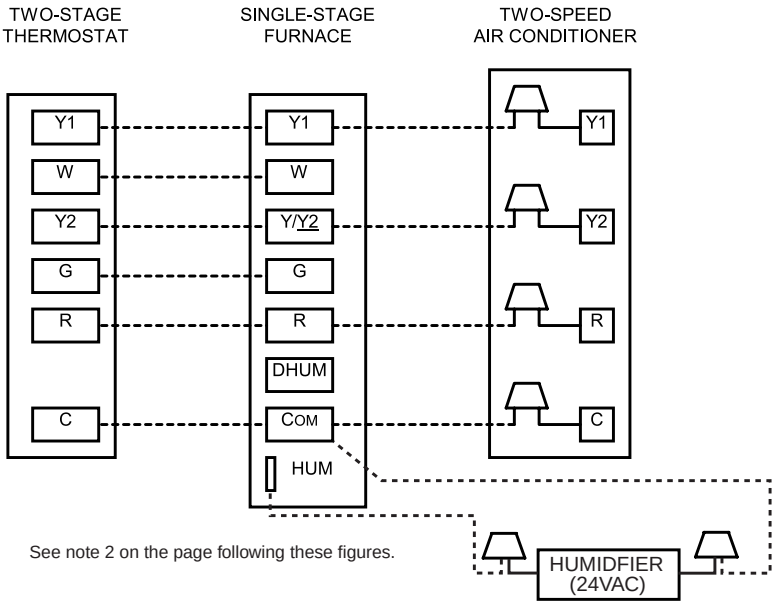


**Fig. 32–Two-Stage Thermostat with Single-Stage Furnace and Two-Speed Air Conditioner**

## Notes For Figures 26-32

1. Heat pump **MUST** have a high pressure switch for dual fuel applications.
2. Refer to outdoor equipment Installation Instructions for additional information and setup procedure.
3. Outdoor Air Temperature Sensor must be attached in all dual fuel applications.
4. Dip switch No. 1 on Thermidistat should be set in **OFF** position for air conditioner installations. This is factory default.
5. Dip switch No. 1 on Thermidistat should be set in **ON** position for heat pump installations.
6. Dip switch No. 2 on Thermidistat should be set in **OFF** position for single-speed compressor operation. This is factory default.
7. Dip switch No. 2 on Thermidistat should be set in **ON** position for two-speed compressor operation.
8. Configuration Option No. 10 “Dual Fuel Selection” must be turned **ON** in all dual fuel applications.
9. **NO** connection should be made to the furnace HUM terminal when using a Thermidistat.
10. The RVS Sensing terminal “L” should not be connected. This is internally used to sense defrost operation.
11. **DO NOT SELECT** the “FURNACE INTERFACE” or “BALANCE POINT” option on the two-speed heat pump control board. This is controlled internally by the Thermidistat/Dual Fuel Thermostat.
12. Dip switch D on Dual Fuel Thermostat should be set in **OFF** position for single-speed compressor operation. This is factory default.
13. Dip switch D on Dual Fuel Thermostat should be set in **ON** position for two-speed compressor operation.

**Canada (and U.S.A.)**-This furnace is permitted to be vented into a clay tile-lined masonry chimney that is exposed to the outdoors below the roof line, provided:

1. Vent connector is Type-B double-wall, and
2. This furnace is common vented with at least 1 draft hood-equipped appliance, and
3. The combined appliance input rating is less than the maximum capacity given in Table A, and
4. The input rating of each space heating appliance is greater than the minimum input rating given in Table B for the local 99% Winter Design Temperature. Chimneys having internal areas greater than 38 square inches require furnace input ratings greater than the input ratings of these furnaces. See footnote at bottom of Table B, and
5. The authority having jurisdiction approves.

If all of these conditions cannot be met, an alternative venting design shall be used, such as the listed chimney adapter kit with these furnaces, which are listed for use with the kit, a listed chimney-lining system, or a Type-B common vent.

Inspections before the sale and at the time of installation will determine the acceptability of the chimney or the need for repair and/or (re)lining. Refer to the Fig. 33 to perform a chimney inspection. If the inspection of a previously used tile-lined chimney:

a. Shows signs of vent gas condensation, the chimney should be relined in accordance with local codes and the authority having jurisdiction. The chimney should be relined with a listed metal liner, Type-B vent, or a listed chimney adapter kit shall be used to reduce condensation. If a condensate drain is required by local code, refer to the NFGC, Section 10.9 for additional information on condensate drains.

b. Indicates the chimney exceeds the maximum permissible size in the tables, the chimney should be rebuilt or relined to conform to the requirements of the equipment being installed and the authority having jurisdiction.

A chimney without a clay tile liner, which is otherwise in good condition, shall be rebuilt to conform to ANSI/NFPA 211 or be lined with a UL listed (ULC listed in Canada) metal liner or UL listed Type-B vent. Relining with a listed metal liner or Type-B vent is considered to be a vent-in-a-chase.

If a metal liner or Type-B vent is used to line a chimney, no other appliance shall be vented into the annular space between the chimney and the metal liner.

## → Exterior Masonry Chimney FAN + NAT Installations with Type-B Double-Wall Vent Connectors ©NFPA & AGA

### Table A—Combined Appliance Maximum Input Rating in Thousands of BTU per Hour

| VENT HEIGHT (FT) | INTERNAL AREA OF CHIMNEY (SQ. IN.) | | | |
|---|---|---|---|---|
| | 12 | 19 | 28 | 38 |
| **6** | 74 | 119 | 178 | 257 |
| **8** | 80 | 130 | 193 | 279 |
| **10** | 84 | 138 | 207 | 299 |
| **15** | NR | 152 | 233 | 334 |
| **20** | NR | NR | 250 | 368 |
| **30** | NR | NR | NR | 404 |

### Table B—Minimum Alowable Input Rating of Space-Heating Appliance in Thousands of BTU per Hour

| | VENT HEIGHT (FT) | INTERNAL AREA OF CHIMNEY (SQ. IN.) | | | |
|---|---|---|---|---|---|
| | | 12 | 19 | 28 | 38 |
| **Local 99% Winter Design Temperature: 17 to 26 degrees F*** | | | | | |
| **17 to 26°F** | 6 | 0 | 55 | 99 | 141 |
| | 8 | 52 | 74 | 111 | 154 |
| | 10 | NR | 90 | 125 | 169 |
| | 15 | NR | NR | 167 | 212 |
| | 20 | NR | NR | 212 | 258 |
| | 30 | NR | NR | NR | 362 |
| **Local 99% Winter Design Temperature: 5 to 16 degrees F*** | | | | | |
| **5 to 16 F** | 6 | NR | 78 | 121 | 166 |
| | 8 | NR | 94 | 135 | 182 |
| | 10 | NR | 111 | 149 | 198 |
| | 15 | NR | NR | 193 | 247 |
| | 20 | NR | NR | NR | 293 |
| | 30 | NR | NR | NR | 377 |
| **Local 99% Winter Design Temperature: -10 to 4 degrees F*** | | | | | |
| **-10 to 4 F** | 6 | NR | NR | 145 | 196 |
| | 8 | NR | NR | 159 | 213 |
| | 10 | NR | NR | 175 | 231 |
| | 15 | NR | NR | NR | 283 |
| | 20 | NR | NR | NR | 333 |
| | 30 | NR | NR | NR | NR |
| **Local 99% Winter Design Temperature: -11 degrees F or lower*** | | | | | |
| **-11 F or lower** | | Not recommended for any vent configuration | | | |

*The 99% Winter Design Dry-Bulb (db) temperatures are found in the 1993 ASHRAE Fundamentals Handbook, Chapter 24, Table 1 (United States) and 2 (Canada), or use the 99.6% heating db temperatures found in the 1997 or 2001 ASHRAE Fundamentals Handbook, Climatic Design Information chapter, Table 1A (United States) and 2A (Canada).

## APPLIANCE APPLICATION REQUIREMENTS

Appliance operation has a significant impact on the performance of the venting system. If the appliances are sized, installed, adjusted, and operated properly, the venting system and/or the appliances should not suffer from condensation and corrosion. The venting system and all appliances shall be installed in accordance with applicable listings, standards, and codes.

The furnace should be sized to provide 100 percent of the design heating load requirement plus any margin that occurs because of furnace model size capacity increments. Heating load estimates can be made using approved methods available from Air Conditioning Contractors of America (Manual J); American Society of Heating, Refrigerating, and Air-Conditioning Engineers; or other approved engineering methods. Excessive oversizing of the furnace could cause the furnace and/or vent to fail prematurely.

When a metal vent or metal liner is used, the vent must be in good condition and be installed in accordance with the vent manufacturer's instructions.

## CHIMNEY INSPECTION CHART

For additional requirements refer to the National Fuel Gas Code NFPA 54/ANSI Z223.1 and ANSI/NFPA 211 Chimneys, Fireplaces, Vents, and Solid Fuel Burning Appliances in the U.S.A. or to the Canadian installation Code CSA-B149.1 in Canada.

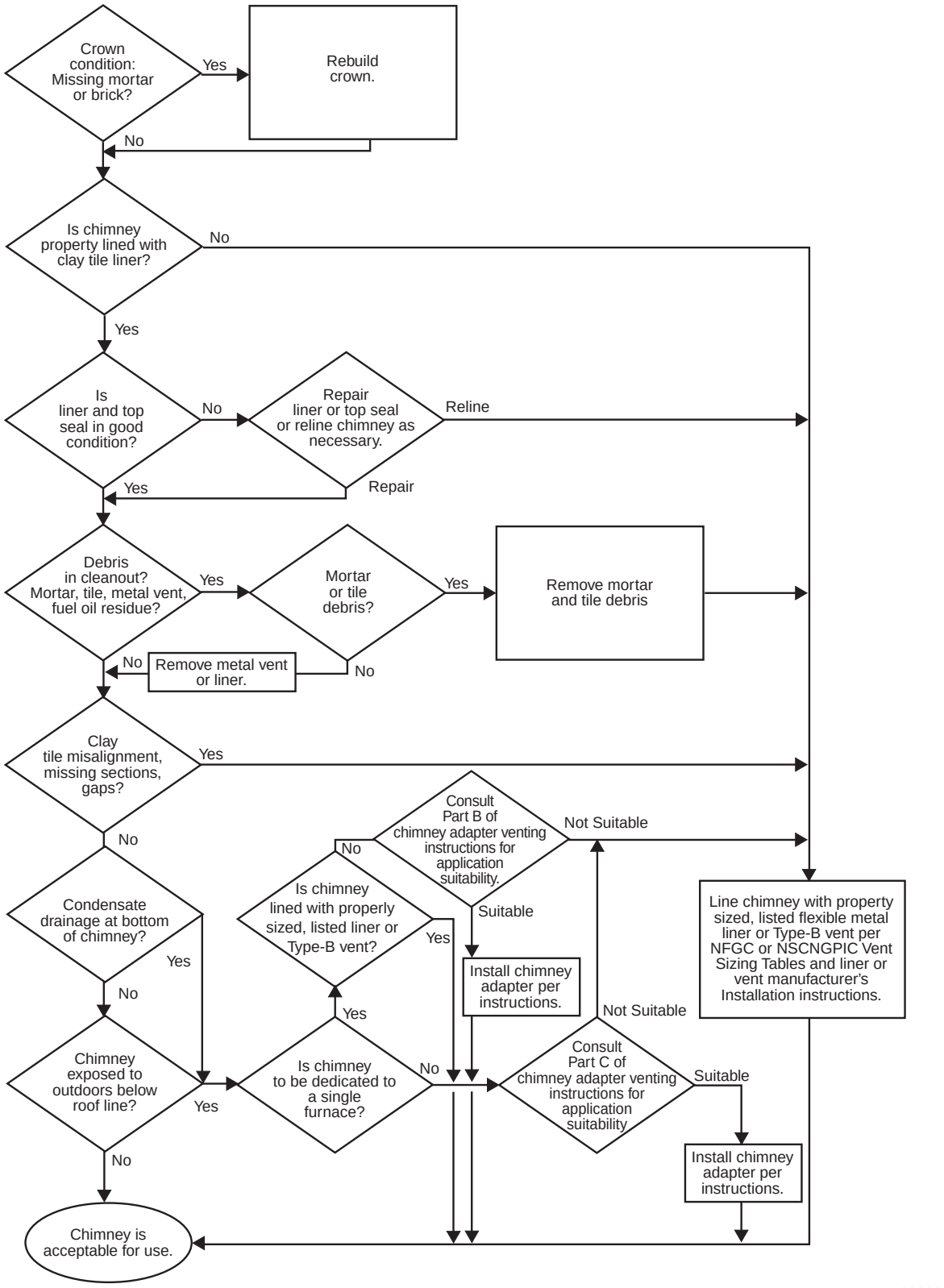


→ **Fig. 33—Chimney Inspection Chart**

To prevent condensation in the furnace and vent system, the following precautions must be observed:

1. The return-air temperature must be at least 60°F db except for brief periods of time during warm-up from setback at no lower than 55°F db or during initial start-up from a standby condition.
2. Adjust the gas input rate per the installation instructions. Low gas input rate causes low vent gas temperatures, causing condensation and corrosion in the furnace and/or venting system. Derating is permitted only for altitudes above 2000 ft.
3. Adjust the air temperature rise to the midpoint of the rise range or slightly above. Low air temperature rise can cause low vent gas temperature and potential for condensation problems.
4. Set the thermostat heat anticipator or cycle rate to reduce short cycling.

Air for combustion must not be contaminated by halogen compounds which include chlorides, fluorides, bromides, and iodides. These compounds are found in many common home products such as detergent, paint, glue, aerosol spray, bleach, cleaning solvent, salt, and air freshener, and can cause corrosion of furnaces and vents. Avoid using such products in the combustion-air supply. Furnace use during construction of the building could cause the furnace to be exposed to halogen compounds, causing premature failure of the furnace or venting system due to corrosion.

Vent dampers on any appliance connected to the common vent can cause condensation and corrosion in the venting system. Do not use vent dampers on appliances common vented with this furnace.

ADDITIONAL VENTING REQUIREMENTS

A 4″ round vent elbow is supplied with the furnace. A 5-inch or 6-inch vent connector may be required for some model furnaces. A field-supplied 4-inch-to-5-inch or 4-inch-to-6-inch sheet metal increaser fitting is required when 5-inch or 6-inch vent connector is used. See Fig. 34–46 Venting Orientation for approved vent configurations.

**NOTE:** Vent connector length for connector sizing starts at furnace vent elbow. The 4-inch vent elbow is shipped for upflow configuration and may be rotated for other positions. Remove the 3 screws that secure vent elbow to furnace, rotate furnace vent elbow to position desired, reinstall screws. The factory-supplied vent elbow does NOT count as part of the number of vent connector elbows.

The vent connector can exit the door through one of 5 locations on the door.

1. Attach the single wall vent connector to the furnace vent elbow, and fasten the vent connector to the vent elbow with at least two field-supplied, corrosion-resistant, sheet metal screws located 180° apart.

→ **NOTE:** An accessory flue extension KGAFE0112UPH is available to extend from the furnace elbow to outside the furnace casing. If flue extension is used, fasten the flue extension to the vent elbow with at least two field-supplied, corrosion-resistant, sheet metal screws located 180° apart. Fasten the vent connector to the flue extension with at least two field-supplied, corrosion-resistant sheet metal screws located 180° apart.

2. Vent the furnace with the appropriate connector as shown in Fig. 34–46.

**⚠ CAUTION**

→ **CUT HAZARD**
Failure to follow this caution may result in personal injury. Sheet metal parts may have sharp edges or burrs. Use care and wear appropriate protective clothing, safety glasses and gloves when handling parts and servicing furnaces.

3. Orient the door to determine the correct location of the door cutout to be removed.
4. Use aviation-type tin snips to remove the correct U-shaped cut-out in door.

→ **NOTE:** If this furnace is equipped with knockouts in the door for the vent, a number of techniques can be used to remove these knockouts as seen in Fig. 47 through 51. The knockout in the bottom of the door is unique due to its flanging and is not easily removed by first cutting the two tie points at the edge of the door, using aviation-type tin snips. (See Fig. 47.) A sharp blow to the rounded end of the knockout (See Fig. 48.) will separate more tie points and allow the knockout to be pulled loose. (See Fig. 49.) Remove all burrs and sharp edges.
For the knockouts in the other locations on the door (top and sides), tin snips can also be used along the door edges; however, the preferred method is to use a hammer and screwdriver to strike a sharp blow (See Fig. 50.) directly to the knockout tie points or use a hammer in the upper left corner of the desired knockout. (See Fig. 51.) Remove all burrs and sharp edges.

**⚠ CAUTION**

→ **BURN HAZARD**
Vent pipe is HOT and may cause personal injury. Hot vent pipe is within reach of small children when installed in downflow position.
See the following instruction.

An accessory Vent Guard Kit, KGAVG0101DFG is REQUIRED for downflow applications for use where the vent exits through the lower portion of the furnace casing door. Refer to the Vent Guard Kit Instructions for complete details.

The horizontal portion of the venting system shall slope upwards not less than 1/4-in. per linear ft (21 mm/m) from the furnace to the vent and shall be rigidly supported every 5 ft or less with metal hangers or straps to ensure there is no movement after installation.

SIDEWALL VENTING

This furnace is not approved for direct sidewall horizontal venting.

**In the U.S.**: Per section 10.3.4 of the NFGC, any listed mechanical venter may be used, when approved by the authority having jurisdiction.

→ **In Canada**: Per section 7.24.2 of the NSCNGPIC, any listed venters may be used, when approved by the authority having jurisdiction.
Select the listed mechanical venter to match the Btuh input of the furnace being vented. Follow all manufacturer's installation requirements for venting and termination included with the listed mechanical venter.

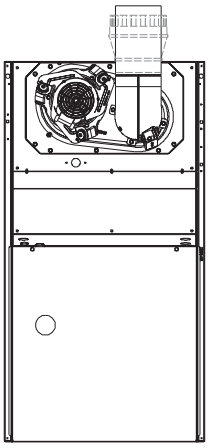

SEE NOTES: 1,2,4,7,8,9
on the page following
these figures

A03208

**Fig. 34—Upflow Application-Vent Elbow Up**

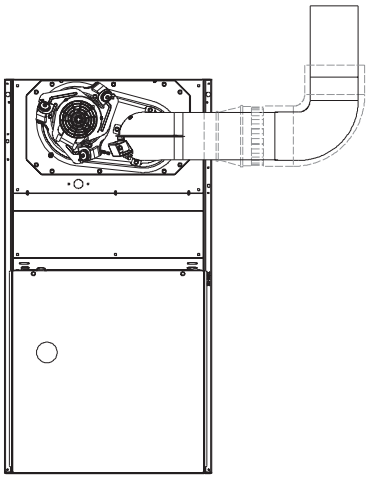

SEE NOTES: 1,2,3,4,7,8,9
on the pages following
these figures

A03209

**Fig. 35—Upflow Application-Vent Elbow Right**

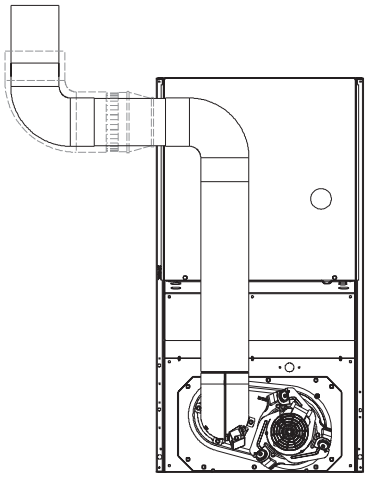

SEE NOTES:1,2,3,4,5,7,8,9
on the page following
these figures

A03210

**Fig. 36—Downflow Application-Vent Elbow Up then Left**

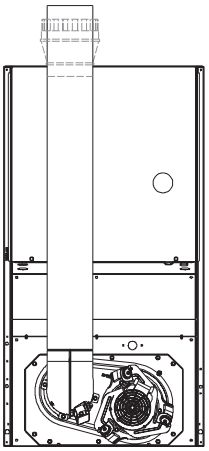

SEE NOTES: 1,2,4,5,7,8,9
on the page following
these figures

A03211

**Fig. 37—Downflow Application-Vent Elbow Up**

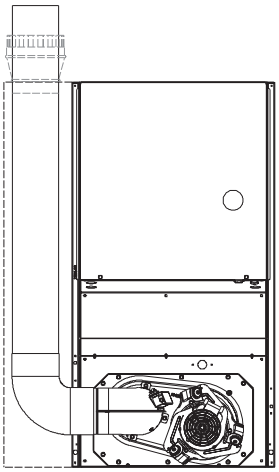

SEE NOTES: 1,2,4,5,6,7,8,9,10
on the page following these figures

A03207

**Fig. 38—Downflow Application-Vent Elbow Left then Up**

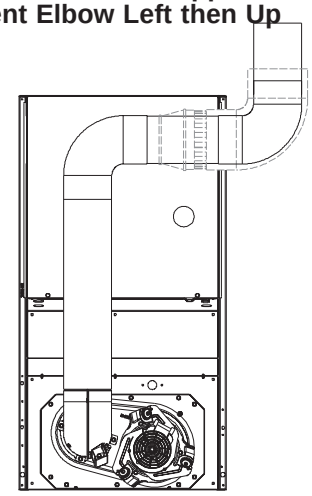

SEE NOTES:1,2,3,4,5,7,8,9
on the page following
these figures.

A03212

**Fig. 39—Downflow Application-Vent Elbow Up then Right**

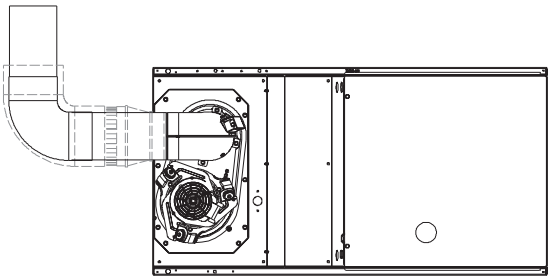

SEE NOTES: 1,2,4,7,8,9 on the page following these figures

A03213

**Fig. 40—Horizontal Left Application-Vent Elbow Left**

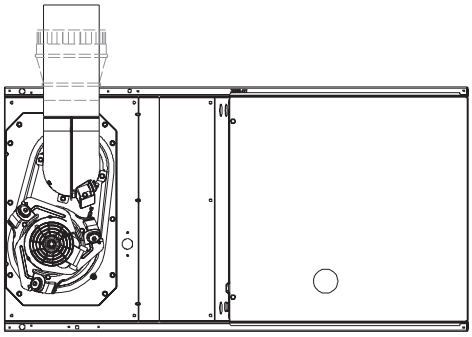

SEE NOTES: 1,2,4,5,7,8,9 on the page following these figures

A03215

**Fig. 42—Horizontal Left Application-Vent Elbow Up**

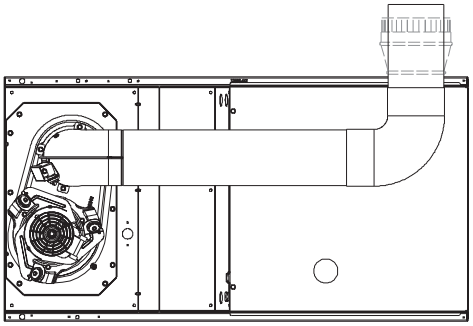

SEE NOTES: 1,2,4,5,7,8,9 on the page following these figures

A03214

**Fig. 41—Horizontal Left Application-Vent Elbow Right then Up**

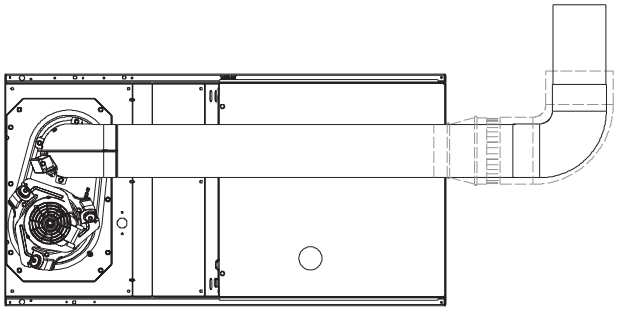

SEE NOTES: 1,2,4,5,7,8,9 on the page following these figures

A03216

**Fig. 43—Horizontal Left Application-Vent Elbow Right**

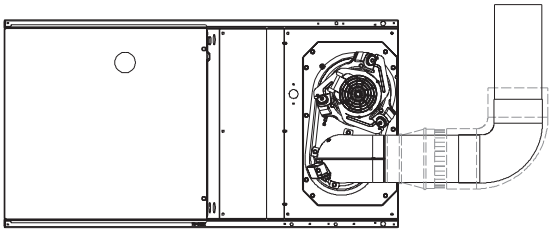

SEE NOTES: 1,2,4,7,8,9 on the page following these figures

A03218

**Fig. 44—Horizontal Right Application-Vent Elbow Right**

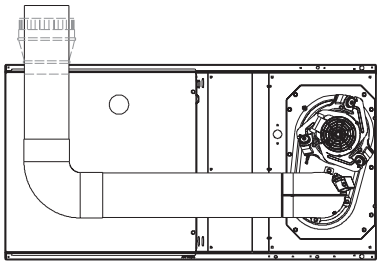

SEE NOTES: 1,2,4,5,7,8,9 on the page following these figures

A03219

**Fig. 45—Horizontal Right Application-Vent Elbow Left then Up**

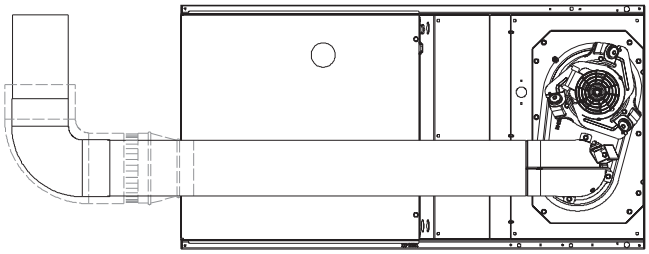

SEE NOTES: 1,2,4,5,7,8,9

A02068

**Fig. 46—Horizontal Right Application-Vent Elbow Left**

## Venting Notes for Figures 34-46

1. For common vent, vent connector sizing and vent material:
   **United States**--use the NFGC
   **Canada**--use the NSCNGPIC
2. Immediately increase to 5-inch or 6-inch vent connector outside furnace casing when 5-inch vent connector is required, refer to Note 1 above.
3. Side outlet vent for upflow and downflow installations must use Type B vent immediately after exiting the furnace, except when KGAVG0101DFG, Downflow Vent Guard Kit, is used in the downflow position.
4. Type-B vent where required, refer to Note 1 above.
5. Four-inch single-wall (26 ga. min.) vent must be used inside furnace casing and when the KGAVG0101DFG Downflow Vent Guard Kit is used external to the furnace.
6. Accessory Downflow Vent Guard Kit, KGAVG0101DFG required in downflow installations with lower vent configuration.
7. Chimney Adapter Kit may be required for exterior masonry chimney applications. Refer to Chimney Adapter Kit, KGACA02014FC or KGACA02015FC, for sizing and complete application details.
8. Secure vent connector to furnace elbow with (2) corrosion-resistant sheet metal screws, spaced approximately 180° apart.
9. Secure all other single wall vent connector joints with (3) corrosion resistant screws spaced approximately 120° apart. Secure Type-B vent connectors per vent connector manufacturer's recommendations.
10. The total height of the vent and connector shall be at least seven feet for the 154,000 Btuh gas input rate model when installed in a downflow application with furnace elbow turned to left side with the connector elbow outside furnace casing pointing upward. (See Fig. 38.)

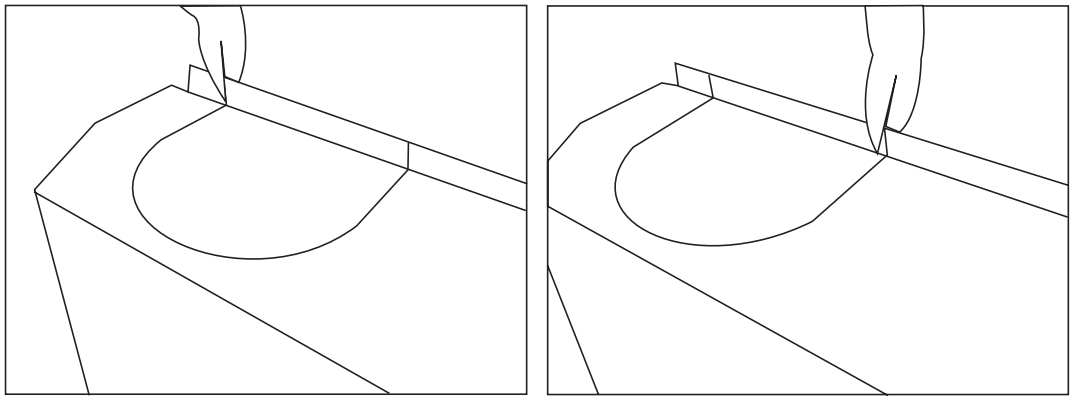

A04127

→ **Fig. 47—Using Tin Snips to Cut Tie Points**

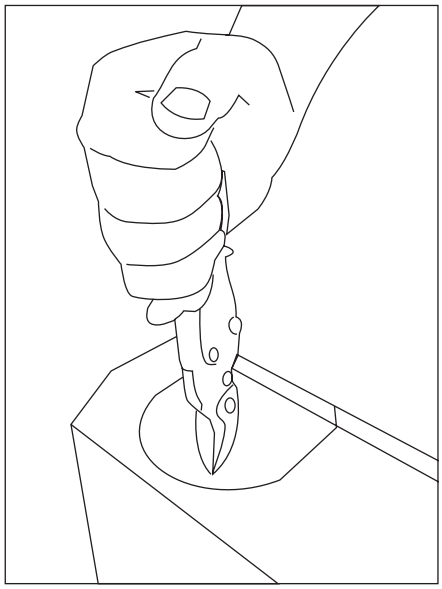

A04128

→ **Fig. 48—Rounded End of Knockout**

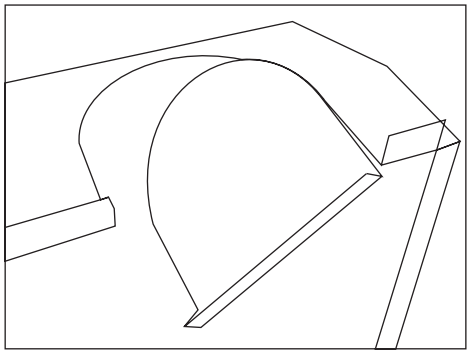

A04129

→ **Fig. 49—Knockout Pulled Loose**

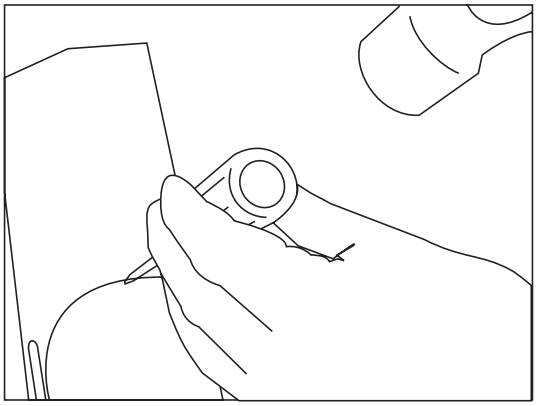

A04130

→ **Fig. 50—Hammer and Screwdriver Used for Knockout**

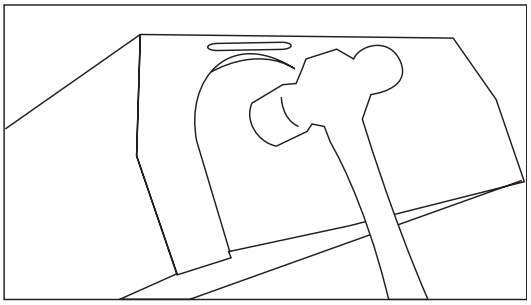

A04131

→ **Fig. 51—Remove Knockout with Hammer**

## START-UP, ADJUSTMENT, AND SAFETY CHECK

### Step 1—General

**⚠ WARNING**

**FIRE HAZARD**
Failure to follow this warning could result in a fire and lead to property damage, personal injury or death.
This furnace is equipped with manual reset limit switches in the gas control area. The switches open and shut off power to the gas valve if a flame rollout or overheating condition occurs in the gas control area. DO NOT bypass the switches. Correct inadequate combustion air supply problem before resetting the switches.

**⚠ CAUTION**

**CUT HAZARD**
Personal injury may result from sharp metal edges, etc. Be careful when removing parts. Gloves and safety glasses should be worn when servicing furnaces.

1. Maintain 115-v wiring and ground. Improper polarity will result in rapid flashing LED and no furnace operation.
2. Make thermostat wire connections at the 24-v terminal block on the furnace control. Failure to make proper connections will result in improper operation. (See Fig. 25.)
3. Gas supply pressure to the furnace must be greater than 4.5-in. wc (0.16 psig ) but not exceed 14-in. wc (0.5 psig ).
4. Check all manual-reset switches for continuity.
5. Install blower compartment door. Door must be in place to operate furnace.
6. Replace outer door.

### Step 2—Start-Up Procedures

**⚠ WARNING**

**FIRE AND EXPLOSION HAZARD**
Failure to follow this warning could cause property damage, personal injury, or death.
Never purge a gas line into a combustion chamber. Never use matches, candles, flame, or other sources of ignition for the purpose of checking leakage. Use a soap-and-water solution to check for leakage.

1. Purge gas lines after all connections have been made.
2. Check gas lines for leaks.

**⚠ WARNING**

**ELECTRICAL SHOCK HAZARD**
Failure to follow this warning could result in electrical shock, personal injury, or death.
Blower access door switch opens 115-v power to control. No component operation can occur unless switch is closed. Caution must be taken when manually closing this switch for service purposes.

→ 3. To Begin Component Self-Test:
Remove blower access door. Disconnect the thermostat R lead from the furnace control board. Manually close the blower door switch closed. Short (jumper) the COM-24v terminal on control to the TEST/TWIN 3/16-inch quick connect terminal on control until LED goes out (approximately 2 sec). Gas valve and humidifier will not be turned on. (See Fig. 24.)

**NOTE:** The furnace control allows all components, except the gas valve, to be run for short period of time. This feature helps diagnose a system problem in case of a component failure. Component test feature will not operate if any thermostat signal is present at the control.

Component test sequence is as follows:
Refer to service label attached to furnace or see Fig. 55.

a. LED will display previous status code 4 times.
b. Inducer motor starts and continues to run until Step f of component test sequence.
c. Hot surface igniter is energized for 15 sec., then off.
d. Blower motor operates on HEAT speed for 10 sec.
e. Blower motor operates on COOL speed for 10 sec.
f. Inducer motor stops.
g. Reconnect R lead to furnace control board, release blower door switch and re-install blower door.

4. Operate furnace per instruction on door.
5. Verify furnace shut down by lowering thermostat setting below room temperature.
6. Verify furnace restarts by raising thermostat setting above room temperature.

**Step 3—Adjustments**

**⚠ WARNING**

→ **FIRE HAZARD**
Failure to follow this warning could result in reduced furnace life, property damage, injury, and death.
DO NOT bottom out gas valve regulator adjusting screw. This can result in unregulated manifold pressure and result in excess overfire and heat exchanger failures.

**⚠ CAUTION**

→ **FURNACE DAMAGE HAZARD**
Failure to follow this caution may result in reduced furnace life.
DO NOT redrill orifices. Improper drilling (burrs, out-of-round holes, etc.) can cause excessive burner noise and misdirection of burner flames. This can result in flame impingement of heat exchangers, causing failures. (See Fig. 53.)

Furnace gas input rate on rating plate is for installations at altitudes up to 2000 ft. Furnace input rate must be within ±2 percent of furnace rating plate input. For altitudes above 5500 ft., a field-supplied high altitude pressure switch is required.

1. Determine the correct gas input rate.
In the U.S.A.:
The input rating for altitudes above 2,000 ft. must be reduced by 4 percent for each 1,000 ft. above sea level. For installations below 2000 ft., refer to the unit rating plate. For installations above 2000 ft., multiply the input on the rating plate by the de-rate multiplier in Table 8 for the correct input rate.
In Canada:
The input rating must be derated by 10 percent for altitudes of 2,000 ft. to 4,500 ft. above sea level by an authorized Gas Conversion Station or Dealer. To determine correct input rate for altitude, see example 1 and use 0.90 as derate multiplier factor.
2. Determine the correct orifice and manifold pressure adjustment. There are two different orifice and manifold adjustment tables. All models in all positions, except Low NOx models in downflow or horizontal positions, use Table 11 (22,000 Btuh/Burner).
Low NOx models in the downflow or horizontal positions

**Caution!! For the following applications, use the minimum vertical vent heights as specified below. For all other applications, follow exclusively the National Fuel Gas Code.**

| FURNACE ORIENTATION | VENT ORIENTATION | FURNACE INPUT(BTU/HR) | MINIMUM VENT DIAMETER (IN.)* | MINIMUM VERTICAL VENT HEIGHT (FT)** |
|---|---|---|---|---|
| **Downflow** | Vent elbow left, then up Fig. 38 | 154,000 132,000 110,000(036/-12 only) | 5 | 12 |
| **Horizontal Left** | Vent elbow right, then up Fig. 41 | 154,000 132,000 | 5 | 7 |
| **Horizontal Left** | Vent Elbow up Fig. 42 | 154,000 132,000 | 5 | 7 |
| **Horizontal Left** | Vent elbow right Fig. 43 | 154,000 | 5 | 7 |
| **Downflow** | Vent elbow up then left Fig. 36 | 110,000 (036/-12 only) | 5 | 10 |
| **Downflow** | Vent elbow up, then right Fig. 39 | 110,000 (036/-12 only) | 5 | 10 |

NOTE: All vent configurations must also meet National Fuel Gas Code venting requirements NFGC
*4 in. inside casing or vent guard
**Including 4 in. vent section(s)

**Table 8–Altitude Derate Multipler for U.S.A.**

| ALTITUDE (FT) | PERCENT OF DERATE | DERATE MULTIPLIER FACTOR* |
|---|---|---|
| **0–2000** | 0 | 1.00 |
| **2001–3000** | 8–12 | 0.90 |
| **3001–4000** | 12–16 | 0.86 |
| **4001–5000** | 16–20 | 0.82 |
| **5001–6000** | 20–24 | 0.78 |
| **6001–7000** | 24–28 | 0.74 |
| **7001–8000** | 28–32 | 0.70 |
| **8001–9000** | 32–36 | 0.66 |
| **9001–10,000** | 36–40 | 0.62 |

* Derate multiplier factors are based on midpoint altitude for altitude range.

**EXAMPLE 1:**
**88,000 BTUH INPUT FURNACE INSTALLED AT 4300 FT.**

| | | | | |
|---|---|---|---|---|
| **Furnace Input Rate at Sea Level** | X | Derate Multiplier Factor | = | Furnace Input Rate at Installation Altitude |
| **88,000** | X | 0.90 | = | 79,200 |

must use Table 12 (21,000 Btuh/Burner). See input listed on rating plate.

a. Obtain average yearly gas heat value (at installed altitude) from local gas supplier.

b. Obtain average yearly gas specific gravity from local gas supplier.

c. Find installation altitude in Table 11 or 12.

d. Find closest natural gas heat value and specific gravity in Table 11 or 12.

e. Follow heat value and specific gravity lines to point of intersection to find orifice size and manifold pressure settings for proper operation.

f. Check and verify burner orifice size in furnace. NEVER ASSUME ORIFICE SIZE. ALWAYS CHECK AND VERIFY.

g. Replace orifice with correct size if required by Table 11 or 12. Use only factory-supplied orifices. See EXAMPLE 2.

EXAMPLE 2: (0–2000 ft altitude)
For 22,000 Btuh per burner application use Table 11.
Heating value = 1000 Btu/cu ft
Specific gravity = 0.62
Therefore: Orifice No. 43*
Manifold pressure: 3.7-in. wc
*Furnace is shipped with No. 43 orifices. In this example all main burner orifices are the correct size and do not need to be changed to obtain proper input rate.

3. Adjust manifold pressure to obtain correct input rate.

a. Turn gas valve ON/OFF switch to OFF.

b. Remove manifold pressure tap plug from gas valve. (See Fig. 52.)

c. Connect a water column manometer or similar device to manifold pressure tap.

→ d. Turn gas valve ON/OFF switch to ON.

e. Manually close blower door switch.

f. Set thermostat to call for heat.

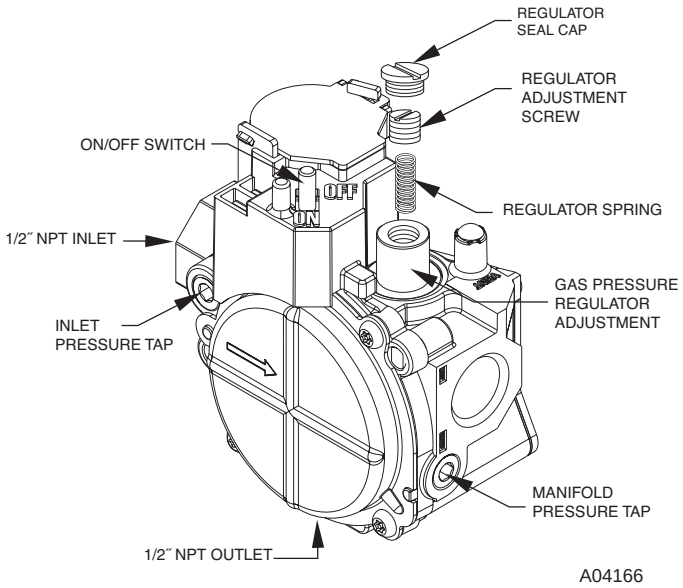


→ **Fig. 52—Gas Control Valve**

g. Remove regulator seal cap and turn regulator adjusting screw counterclockwise (out) to decrease input rate of clockwise (in) to increase input rate.

h. Install regulator seal cap.

i. Leave manometer or similar device connected and proceed to Step 4.

**NOTE:** DO NOT set manifold pressure less than 3.2-in wc or more than 3.8-in. wc for natural gas at sea level. If manifold pressure is outside this range, change main burner orifices or refer Table 11 or 12.

**NOTE:** If orifice hole appears damaged or it is suspected to have been redrilled, check orifice hole with a numbered drill bit of correct size. Never redrill an orifice. A burr-free and squarely aligned orifice hole is essential for proper flame characteristics.

4. Verify natural gas input rate by clocking meter.

**NOTE:** Gas valve regulator adjustment cap must be in place for proper input to be clocked.

a. Turn off all other gas appliances and pilots served by the meter.

b. Run furnace for 3 minutes in heating operation.

c. Measure time (in sec) for gas meter to complete 1 revolution and note reading. The 2 or 5 cubic feet dial provides a more accurate measurement of gas flow.

d. Refer to Table 10 for cubic ft of gas per hr.

e. Multiply gas rate (cu ft/hr) by heating value (Btu/cu ft) to obtain input.

If clocked rate does not match required input from Step 1, increase manifold pressure to increase input or decrease manifold pressure to decrease input. Repeat steps b through e until correct input is achieved. Reinstall regulator seal cap on gas valve.

5. Set temperature rise.
The furnace must operate within the temperature rise ranges specified on the furnace rating plate. Do not exceed temperature rise range specified on unit rating plate. Determine the temperature rise as follows:

→ **NOTE:** Blower access door must be installed when taking temperature rise reading. Leaving blower access door off will result in incorrect temperature measurements.

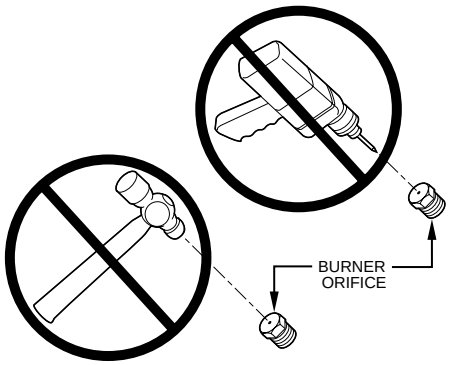


A93059

**Fig. 53—Orifice Hole**

a. Place thermometers in return and supply ducts as close to furnace as possible. Be sure thermometers do not see radiant heat from heat exchangers. Radiant heat affects temperature rise readings. This practice is particularly important with straight-run ducts.

b. When thermometer readings stabilize, subtract return-air temperature from supply-air temperature to determine air temperature rise.

**NOTE:** Blower access door must be installed for proper temperature rise measurement.

**NOTE:** If the temperature rise is outside this range, first check:
1.) Gas input for heating operation.
2.) Derate for altitude if applicable.
3.) Return and supply ducts for excessive restrictions causing static pressures greater than 0.50-in. wc.
4.)Dirty filter.

**⚠ WARNING**

**ELECTRICAL SHOCK HAZARD**
Failure to follow this warning could result in personal injury or death.
Disconnect 115-v electrical power before changing speed tap.

c. Adjust air temperature rise by adjusting blower speed. Increase blower speed to reduce temperature rise. Decrease blower speed to increase temperature rise.

d. Turn thermostat down below room temperature and remove blower access door.

e. To change motor speed selection for heating, remove blower motor lead from control HEAT terminal (See Fig. 24.) Select desired blower motor speed lead from one of the other terminals and relocate it to the HEAT terminal (See Table 9 for lead color identification). Reconnect original lead to SPARE terminal.

f. Repeat steps a through e.

g. When correct input rate and temperature rise is achieved, turn gas valve ON/OFF switch to OFF.

h. Remove manometer or similar device from gas valve.

i. Reinstall manifold pressure tap plug in gas valve.

**⚠ WARNING**

→ **FIRE HAZARD**
Leaking gas could be ignited and cause fire, explosion, personal injury, property damage or death.
Reinstall manifold pressure tap plug in gas valve to prevent gas leak.

j. Reinstall blower access door if removed.

**Table 9—Speed Selection**

| COLOR | SPEED | AS SHIPPED |
|---|---|---|
| **White** | Common | BLW |
| **Black** | High | COOL |
| **Yellow†** | Med-High | SPARE |
| **Blue** | Med-Low | HEAT |
| **Red** | Low* | SPARE |

* Continuous-blower speed-as shipped default
† Not available on 1/5 HP motors.

k. Turn gas valve ON/OFF switch to ON.

**⚠ CAUTION**

→ **FURNACE OVERHEATING HAZARD**
Failure to properly set temperature rise may cause excessive furnace temperatures and shorten furnace life.
Recheck temperature rise. It must be within limits specified on the rating plate. Recommended operation is at the mid-point of rise range or slightly above

6. Set thermostat heat anticipator.

a. Mechanical thermostat—Set thermostat heat anticipator to match the amp draw of the electrical components in the R-W circuit. Accurate amp draw readings can be obtained at the wires normally connected to thermostat subbase terminals, R and W. The thermostat anticipator should NOT be in the circuit while measuring current.

(1.) Remove thermostat from subbase or from wall.

(2.) Connect an amp meter as shown in Fig. 54 across the R and W subbase terminals or R and W wires at wall.

(3.) Record amp draw across terminals when furnace is in heating and after blower starts.

(4.) Set heat anticipator on thermostat per thermostat instructions and install on subbase or wall.

b. Electronic thermostat: Set cycle rate for 4 cycles per hr.

7. Adjust blower off delay
The blower off delay has 4 adjustable settings from 90 sec to 180 sec. The blower off delay jumpers are located on the furnace control board. (See Fig. 24.)
To change the blower off delay setting, move the jumper from one set of pins on the control to the pins used for the selected blower off delay. Factory off delay setting is 120 sec.

→ 8. Set airflow CFM for cooling
Select the desired blower motor speed lead for cooling airflow. See Table 5-Air Delivery-CFM (With Filter). See Table 9 for lead color identification.

### Step 4—Check Safety Controls

The flame sensor, gas valve, and pressure switch were all checked in the Start-up procedure section as part of normal operation.

1. Check Main Limit Switch(es)
This control shuts off combustion control system and energizes air-circulating blower motor, if furnace overheats. By using this method to check limit control, it can be established that limit is functioning properly and will operate if there is a restricted duct system or motor failure. If limit control does not function during this test, cause must be determined and corrected.

a. Run furnace for at least 5 minutes.

b. Gradually block off return air with a piece of cardboard or sheet metal until the limit trips.

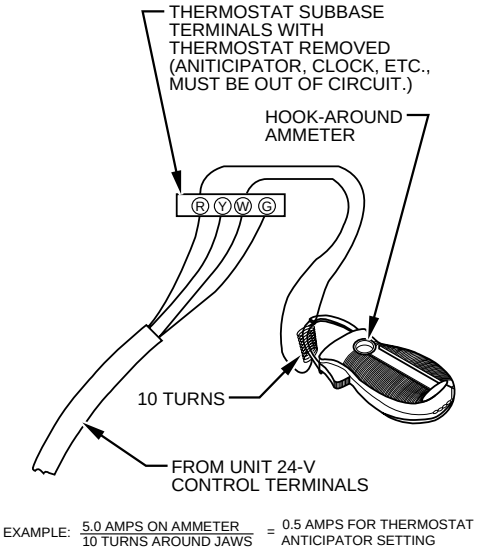


**Fig. 54—Amp Draw Check With Ammeter**

c. Unblock return air to permit normal circulation.

d. Burners will re-light when furnace cools down.

2. Check draft safeguard switch.
The purpose of this control is to cause the safe shutdown of the furnace during certain blocked vent conditions.

a. Verify vent pipe is cool to the touch.

b. Disconnect power to furnace and remove vent connector from furnace vent elbow.

c. Restore power to furnace and set room thermostat above room temperature.

d. After normal start-up, allow furnace to operate for 2 minutes, then block vent elbow in furnace 80 percent of vent area with a piece of flat sheet metal.

→ e. Furnace should cycle off within 2 minutes. If gas does not shut off within 2 minutes, determine reason draft safeguard switch did not function properly and correct condition.

→ f. Remove blockage from furnace vent elbow.

g. Switch will auto-reset when it cools.

→ h. Re-install vent connector.

→ **NOTE:** Should switch remain open longer than 3 minutes, furnace control board will lockout the furnace for 3 hours. To reset furnace control board, turn thermostat below room temperature or from HEAT to OFF and turn 115v power OFF, then back ON.

3. Check Pressure Switch
This control proves operation of the draft inducer blower.

a. Turn off 115-v power to furnace.

b. Disconnect inducer motor lead wires from wire harness.

c. Turn on 115-v power to furnace.

d. Set thermostat to ″call for heat″ and wait 1 minute. When pressure switch is functioning properly, hot surface igniter should NOT glow and control diagnostic light flashes a status code 32. If hot surface igniter glows when inducer motor is disconnected, shut down furnace immediately.

e. Determine reason pressure switch did not function properly and correct condition.

f. Turn off 115-v power to furnace.

g. Reconnect inducer motor wires, replace outer door, and turn on 115-v power.

## Table 10–GAS RATE (CU FT/HR)

| SECONDS FOR 1 REVOLUTION | SIZE OF TEST DIAL | | | SECONDS FOR 1 REVOLUTION | SIZE OF TEST DIAL | | |
|---|---|---|---|---|---|---|---|
| | 1 Cu Ft | 2 Cu Ft | 5 Cu Ft | | 1 Cu Ft | 2 Cu Ft | 5 Cu Ft |
| **10** | 360 | 720 | 1800 | 50 | 72 | 144 | 360 |
| **11** | 327 | 655 | 1636 | 51 | 71 | 141 | 355 |
| **12** | 300 | 600 | 1500 | 52 | 69 | 138 | 346 |
| **13** | 277 | 555 | 1385 | 53 | 68 | 136 | 340 |
| **14** | 257 | 514 | 1286 | 54 | 67 | 133 | 333 |
| **15** | 240 | 480 | 1200 | 55 | 65 | 131 | 327 |
| **16** | 225 | 450 | 1125 | 56 | 64 | 129 | 321 |
| **17** | 212 | 424 | 1059 | 57 | 63 | 126 | 316 |
| **18** | 200 | 400 | 1000 | 58 | 62 | 124 | 310 |
| **19** | 189 | 379 | 947 | 59 | 61 | 122 | 305 |
| **20** | 180 | 360 | 900 | 60 | 60 | 120 | 300 |
| **21** | 171 | 343 | 857 | 62 | 58 | 116 | 290 |
| **22** | 164 | 327 | 818 | 64 | 56 | 112 | 281 |
| **23** | 157 | 313 | 783 | 66 | 54 | 109 | 273 |
| **24** | 150 | 300 | 750 | 68 | 53 | 106 | 265 |
| **25** | 144 | 288 | 720 | 70 | 51 | 103 | 257 |
| **26** | 138 | 277 | 692 | 72 | 50 | 100 | 250 |
| **27** | 133 | 267 | 667 | 74 | 48 | 97 | 243 |
| **28** | 129 | 257 | 643 | 76 | 47 | 95 | 237 |
| **29** | 124 | 248 | 621 | 78 | 46 | 92 | 231 |
| **30** | 120 | 240 | 600 | 80 | 45 | 90 | 225 |
| **31** | 116 | 232 | 581 | 82 | 44 | 88 | 220 |
| **32** | 113 | 225 | 563 | 84 | 43 | 86 | 214 |
| **33** | 109 | 218 | 545 | 86 | 42 | 84 | 209 |
| **34** | 106 | 212 | 529 | 88 | 41 | 82 | 205 |
| **35** | 103 | 206 | 514 | 90 | 40 | 80 | 200 |
| **36** | 100 | 200 | 500 | 92 | 39 | 78 | 196 |
| **37** | 97 | 195 | 486 | 94 | 38 | 76 | 192 |
| **38** | 95 | 189 | 474 | 96 | 38 | 75 | 188 |
| **39** | 92 | 185 | 462 | 98 | 37 | 74 | 184 |
| **40** | 90 | 180 | 450 | 100 | 36 | 72 | 180 |
| **41** | 88 | 176 | 439 | 102 | 35 | 71 | 178 |
| **42** | 86 | 172 | 429 | 104 | 35 | 69 | 173 |
| **43** | 84 | 167 | 419 | 106 | 34 | 68 | 170 |
| **44** | 82 | 164 | 409 | 108 | 33 | 67 | 167 |
| **45** | 80 | 160 | 400 | 110 | 33 | 65 | 164 |
| **46** | 78 | 157 | 391 | 112 | 32 | 64 | 161 |
| **47** | 76 | 153 | 383 | 116 | 31 | 62 | 155 |
| **48** | 75 | 150 | 375 | 120 | 30 | 60 | 150 |
| **49** | 73 | 147 | 367 | | | | |

→ h. Blower will run for 90 sec before beginning the call for heat again.

→ i. Furnace should ignite normally.

### Step 5—Checklist

1. Put away tools and instruments. Clean up debris.
2. Verify that blower OFF-DELAY time is selected as desired.
3. Verify that blower and burner access doors are properly installed.
4. Cycle test furnace with room thermostat.
5. Check operation of accessories per manufacturer's instructions.
6. Review User's Guide with owner.
7. Attach literature packet to furnace.

## Table 11—Orifice Size* and Manifold Pressure For Gas Input Rate
## (Tabulated Data Based On 22,000 Btuh Per Burner, Derated 4 Percent For Each 1000 Ft Above Sea Level)

| ALTITUDE RANGE (FT) | | AVG GAS HEAT VALUE (BTU/CU FT) | SPECIFIC GRAVITY OF NATURAL GAS | | | | | | | |
|---|---|---|---|---|---|---|---|---|---|---|
| | | | 0.58 | | 0.60 | | 0.62 | | 0.64 | |
| | | | Orifice No. | Manifold Pressure | Orifice No. | Manifold Pressure | Orifice No. | Manifold Pressure | Orifice No. | Manifold Pressure |
| U.S.A. and Canada | 0 to 2000 | 900 | 42 | 3.5 | 42 | 3.6 | 42 | 3.7 | 41 | 3.5 |
| | | 925 | 42 | 3.3 | 42 | 3.4 | 42 | 3.5 | 42 | 3.7 |
| | | 950 | 43 | 3.8 | 42 | 3.3 | 42 | 3.4 | 42 | 3.5 |
| | | 975 | 43 | 3.6 | 43 | 3.8 | 42 | 3.2 | 42 | 3.3 |
| | | 1000 | 43 | 3.5 | 43 | 3.6 | 43 | 3.7 | 43 | 3.8 |
| | | 1025 | 43 | 3.3 | 43 | 3.4 | 43 | 3.5 | 43 | 3.6 |
| | | 1050 | 44 | 3.6 | 43 | 3.2 | 43 | 3.4 | 43 | 3.5 |
| | | 1075 | 44 | 3.4 | 44 | 3.5 | 43 | 3.2 | 43 | 3.3 |
| | | 1100 | 44 | 3.3 | 44 | 3.4 | 44 | 3.5 | 43 | 3.2 |
| ALTITUDE RANGE (FT) | | AVG GAS HEAT VALUE (BTU/CU FT) | SPECIFIC GRAVITY OF NATURAL GAS | | | | | | | |
| | | | 0.58 | | 0.60 | | 0.62 | | 0.64 | |
| | | | Orifice No. | Manifold Pressure | Orifice No. | Manifold Pressure | Orifice No. | Manifold Pressure | Orifice No. | Manifold Pressure |
| U.S.A. and Canada | U.S.A. Altitudes 2001 to 3000 or Canada Altitudes 2000 to 4500 | 800 | 42 | 3.4 | 42 | 3.5 | 42 | 3.6 | 42 | 3.7 |
| | | 825 | 42 | 3.2 | 42 | 3.3 | 42 | 3.4 | 42 | 3.5 |
| | | 850 | 43 | 3.7 | 43 | 3.8 | 42 | 3.2 | 42 | 3.3 |
| | | 875 | 43 | 3.5 | 43 | 3.6 | 43 | 3.7 | 43 | 3.8 |
| | | 900 | 43 | 3.3 | 43 | 3.4 | 43 | 3.5 | 43 | 3.6 |
| | | 925 | 43 | 3.1 | 43 | 3.2 | 43 | 3.3 | 43 | 3.4 |
| | | 950 | 43 | 2.9 | 43 | 3.0 | 43 | 3.1 | 43 | 3.2 |
| | | 975 | 43 | 2.8 | 43 | 2.9 | 43 | 3.0 | 43 | 3.1 |
| | | 1000 | 43 | 2.6 | 43 | 2.7 | 43 | 2.8 | 43 | 2.9 |
| ALTITUDE RANGE (FT) | | AVG GAS HEAT VALUE (BTU/CU FT) | SPECIFIC GRAVITY OF NATURAL GAS | | | | | | | |
| | | | 0.58 | | 0.60 | | 0.62 | | 0.64 | |
| | | | Orifice No. | Manifold Pressure | Orifice No. | Manifold Pressure | Orifice No. | Manifold Pressure | Orifice No. | Manifold Pressure |
| U.S.A. Only | 3001 to 4000 | 775 | 42 | 3.2 | 42 | 3.3 | 42 | 3.4 | 42 | 3.5 |
| | | 800 | 43 | 3.6 | 43 | 3.8 | 42 | 3.2 | 42 | 3.3 |
| | | 825 | 43 | 3.4 | 43 | 3.5 | 43 | 3.7 | 43 | 3.8 |
| | | 850 | 43 | 3.2 | 43 | 3.3 | 43 | 3.4 | 43 | 3.6 |
| | | 875 | 43 | 3.0 | 43 | 3.1 | 43 | 3.3 | 43 | 3.4 |
| | | 900 | 43 | 2.9 | 43 | 3.0 | 43 | 3.1 | 43 | 3.2 |
| | | 925 | 43 | 2.7 | 43 | 2.8 | 43 | 2.9 | 43 | 3.0 |
| | | 950 | 43 | 2.6 | 43 | 2.7 | 43 | 2.8 | 43 | 2.8 |
| ALTITUDE RANGE (FT) | | AVG GAS HEAT VALUE (BTU/CU FT) | SPECIFIC GRAVITY OF NATURAL GAS | | | | | | | |
| | | | 0.58 | | 0.60 | | 0.62 | | 0.64 | |
| | | | Orifice No. | Manifold Pressure | Orifice No. | Manifold Pressure | Orifice No. | Manifold Pressure | Orifice No. | Manifold Pressure |
| U.S.A. Only | 4001 to 5000 | 750 | 43 | 3.6 | 43 | 3.8 | 42 | 3.2 | 42 | 3.3 |
| | | 775 | 43 | 3.4 | 43 | 3.5 | 43 | 3.6 | 43 | 3.8 |
| | | 800 | 43 | 3.2 | 43 | 3.3 | 43 | 3.4 | 43 | 3.5 |
| | | 825 | 43 | 3.0 | 43 | 3.1 | 43 | 3.2 | 43 | 3.3 |
| | | 850 | 43 | 2.8 | 43 | 2.9 | 43 | 3.0 | 43 | 3.1 |
| | | 875 | 43 | 2.7 | 43 | 2.8 | 43 | 2.9 | 43 | 2.9 |
| | | 900 | 43 | 2.5 | 43 | 2.6 | 43 | 2.7 | 43 | 2.8 |
| | | 925 | 43 | 2.4 | 43 | 2.5 | 43 | 2.6 | 43 | 2.6 |

* Orifice numbers 43 are factory installed

**Table 11—Orifice Size* And Manifold Pressure For Gas Input Rate (Continued)**
**(Tabulated Data Based On 22,000 Btuh Per Burner, Derated 4 Percent For Each 1000 Ft Above Sea Level)**

| ALTITUDE RANGE (FT) | | AVG GAS HEAT VALUE AT ALTITUDE (BTU/CU FT) | SPECIFIC GRAVITY OF NATURAL GAS | | | | | | | |
|---|---|---|---|---|---|---|---|---|---|---|
| | | | 0.58 | | 0.60 | | 0.62 | | 0.64 | |
| | | | Orifice No. | Manifold Pressure | Orifice No. | Manifold Pressure | Orifice No. | Manifold Pressure | Orifice No. | Manifold Pressure |
| U.S.A. Only | 5001 to 6000 | 725 | 43 | 3.4 | 43 | 3.5 | 43 | 3.6 | 43 | 3.7 |
| | | 750 | 43 | 3.2 | 43 | 3.3 | 43 | 3.4 | 43 | 3.5 |
| | | 775 | 43 | 3.0 | 43 | 3.1 | 43 | 3.2 | 43 | 3.3 |
| | | 800 | 43 | 2.8 | 43 | 2.9 | 43 | 3.0 | 43 | 3.1 |
| | | 825 | 43 | 2.6 | 43 | 2.7 | 43 | 2.8 | 43 | 2.9 |
| | | 850 | 43 | 2.5 | 43 | 2.5 | 43 | 2.6 | 43 | 2.7 |
| | | 875 | 43 | 2.3 | 43 | 2.4 | 43 | 2.5 | 43 | 2.6 |
| | | 900 | 43 | 2.2 | 43 | 2.3 | 43 | 2.3 | 43 | 2.4 |
| ALTITUDE RANGE (FT) | | AVG GAS HEAT VALUE AT ALTITUDE (BTU/CU FT) | SPECIFIC GRAVITY OF NATURAL GAS | | | | | | | |
| | | | 0.58 | | 0.60 | | 0.62 | | 0.64 | |
| | | | Orifice No. | Manifold Pressure | Orifice No. | Manifold Pressure | Orifice No. | Manifold Pressure | Orifice No. | Manifold Pressure |
| U.S.A. Only | 6001 to 7000 | 675 | 43 | 3.4 | 43 | 3.5 | 43 | 3.6 | 43 | 3.7 |
| | | 700 | 43 | 3.1 | 43 | 3.3 | 43 | 3.4 | 43 | 3.5 |
| | | 725 | 43 | 2.9 | 43 | 3.0 | 43 | 3.1 | 43 | 3.2 |
| | | 750 | 43 | 2.7 | 43 | 2.8 | 43 | 2.9 | 43 | 3.0 |
| | | 775 | 43 | 2.6 | 43 | 2.7 | 43 | 2.7 | 43 | 2.8 |
| | | 800 | 43 | 2.4 | 43 | 2.5 | 43 | 2.6 | 43 | 2.7 |
| | | 825 | 43 | 2.3 | 43 | 2.3 | 43 | 2.4 | 43 | 2.5 |
| | | 850 | 43 | 2.1 | 43 | 2.2 | 43 | 2.3 | 43 | 2.4 |
| ALTITUDE RANGE (FT) | | AVG GAS HEAT VALUE AT ALTITUDE (BTU/CU FT) | SPECIFIC GRAVITY OF NATURAL GAS | | | | | | | |
| | | | 0.58 | | 0.60 | | 0.62 | | 0.64 | |
| | | | Orifice No. | Manifold Pressure | Orifice No. | Manifold Pressure | Orifice No. | Manifold Pressure | Orifice No. | Manifold Pressure |
| U.S.A. Only | 7001 to 8000 | 650 | 43 | 3.1 | 43 | 3.2 | 43 | 3.4 | 43 | 3.5 |
| | | 675 | 43 | 2.9 | 43 | 3.0 | 43 | 3.1 | 43 | 3.2 |
| | | 700 | 43 | 2.7 | 43 | 2.8 | 43 | 2.9 | 43 | 3.0 |
| | | 725 | 43 | 2.5 | 43 | 2.6 | 43 | 2.7 | 43 | 2.8 |
| | | 750 | 43 | 2.4 | 43 | 2.4 | 43 | 2.5 | 43 | 2.6 |
| | | 775 | 43 | 2.2 | 43 | 2.3 | 43 | 2.4 | 43 | 2.4 |
| | | 800 | 43 | 2.1 | 43 | 2.1 | 43 | 2.2 | 43 | 2.3 |
| | | 825 | 48 | 3.7 | 43 | 2.0 | 43 | 2.1 | 43 | 2.2 |
| ALTITUDE RANGE (FT) | | AVG GAS HEAT VALUE AT ALTITUDE (BTU/CU FT) | SPECIFIC GRAVITY OF NATURAL GAS | | | | | | | |
| | | | 0.58 | | 0.60 | | 0.62 | | 0.64 | |
| | | | Orifice No. | Manifold Pressure | Orifice No. | Manifold Pressure | Orifice No. | Manifold Pressure | Orifice No. | Manifold Pressure |
| U.S.A. Only | 8001 to 9000 | 625 | 43 | 2.9 | 43 | 3.0 | 43 | 3.1 | 43 | 3.2 |
| | | 650 | 43 | 2.7 | 43 | 2.8 | 43 | 2.9 | 43 | 3.0 |
| | | 675 | 43 | 2.5 | 43 | 2.6 | 43 | 2.7 | 43 | 2.8 |
| | | 700 | 43 | 2.3 | 43 | 2.4 | 43 | 2.5 | 43 | 2.6 |
| | | 725 | 43 | 2.2 | 43 | 2.2 | 43 | 2.3 | 43 | 2.4 |
| | | 750 | 43 | 2.0 | 43 | 2.1 | 43 | 2.2 | 43 | 2.2 |
| | | 775 | 48 | 3.6 | 48 | 3.7 | 43 | 2.0 | 43 | 2.1 |

* Orifice numbers 43 are factory installed

**Table 11—Orifice Size* And Manifold Pressure For Gas Input Rate (Continued)**
**(Tabulated Data Based On 22,000 Btuh Per Burner, Derated 4 Percent For Each 1000 Ft Above Sea Level)**

| ALTITUDE RANGE (FT) | | AVG GAS HEAT VALUE AT ALTITUDE (BTU/CU FT) | SPECIFIC GRAVITY OF NATURAL GAS | | | | | | | |
|---|---|---|---|---|---|---|---|---|---|---|
| | | | 0.58 | | 0.60 | | 0.62 | | 0.64 | |
| | | | Orifice No. | Manifold Pressure | Orifice No. | Manifold Pressure | Orifice No. | Manifold Pressure | Orifice No. | Manifold Pressure |
| U.S.A. Only | 9001 to 10,000 | 600 | 43 | 2.7 | 43 | 2.8 | 43 | 2.9 | 43 | 3.0 |
| | | 625 | 43 | 2.5 | 43 | 2.6 | 43 | 2.6 | 43 | 2.7 |
| | | 650 | 43 | 2.3 | 43 | 2.4 | 43 | 2.4 | 43 | 2.5 |
| | | 675 | 43 | 2.1 | 43 | 2.2 | 43 | 2.3 | 43 | 2.3 |
| | | 700 | 48 | 3.7 | 43 | 2.0 | 43 | 2.1 | 43 | 2.2 |
| | | 725 | 48 | 3.5 | 48 | 3.6 | 48 | 3.7 | 43 | 2.0 |

* Orifice numbers 43 are factory installed

## SERVICE AND MAINTENANCE PROCEDURES

**⚠ WARNING**

**FIRE, INJURY, OR DEATH HAZARD**
Failure to follow this warning could result in possible damage to this equipment, serious personal injury, or death.
The ability to properly perform maintenance on this equipment requires certain knowledge, mechanical skills, tools, and equipment. If you do not possess these, do not attempt to perform any maintenance on this equipment other than those procedures recommended in the User's Manual.

**⚠ WARNING**

→ **ELECTRICAL SHOCK, FIRE OR EXPLOSION HAZARD**
Failure to follow this warning could result in personal injury or death, or property damage.
Before servicing, disconnect all electrical power to furnace. Verify proper operation after servicing.

**⚠ CAUTION**

→ **ELECTRICAL OPERATION HAZARD**
Failure to follow this caution may result in improper furnace operation or failure of furnace.
Label all wires prior to disconnection when servicing controls. Wiring errors can cause improper and dangerous operation.

### Step 1—Introduction

GENERAL

These instructions are written as if the furnace is installed in an upflow application. An upflow furnace application is where the blower is located below the combustion and controls section of the furnace, and conditioned air is discharged upward. Since this furnace can be installed in any of the 4 positions shown in Fig. 4, you must revise your orientation to component location accordingly.

ELECTRICAL CONTROLS AND WIRING

**⚠ CAUTION**

→ **ELECTRICAL SHOCK HAZARD**
Failure to follow this warning could result in personal injury or death.
There may be more than one electrical supply to the furnace. Check accessories and cooling unit for additional electrical supplies that must be shut off during furnace servicing.

The electrical ground and polarity for 115-v wiring must be properly maintained. Refer to Fig. 25 for field wiring information and to Fig. 56 for furnace wiring information.

**NOTE:** If the polarity is not correct, the STATUS LED on the control will flash rapidly and prevent the furnace from heating. The control system also requires an earth ground for proper operation of the control and flame-sensing electrode.

The 24-v circuit contains an automotive-type, 3-amp fuse located on the control. (See Fig. 24.) Any shorts of the 24-v wiring during installation, service, or maintenance will cause this fuse to blow. If fuse replacement is required, use ONLY a 3-amp fuse. The control LED will display status code 24 when fuse needs to be replaced.

Proper instrumentation is required to service electrical controls. The control in this furnace is equipped with a Status Code LED (Light-Emitting Diode) to aid in installation, servicing, and troubleshooting. It can be viewed through the sight glass in blower access door. The furnace control LED is either ON continuously, rapid flashing, or a code composed of 2 digits. The first digit is the number of short flashes, the second digit is the number of long flashes.

For an explanation of status codes, refer to service label located on blower access door or Fig. 55 and the troubleshooting guide which can be obtained from your distributor.

→ See Fig. 60, a brief Troubleshooting Guide.

For Controls With an Amber LED
The stored status code will not be erased from the control memory, if 115- or 24-v power is interrupted.

1. To retrieve status code, proceed with the following:

**NOTE:** NO thermostat signal may be present at control, and all blower-OFF delays must be completed.

a. Leave 115-v power to furnace turned on.
b. Remove outer access door.
c. Look into blower access door sight glass for current LED status. Removing blower access door will open blower access door switch and terminate 115-v power to control so that status code is not displayed.

## Table 12—Orifice Size* and Manifold Pressure For Gas Input Rate (Tabulated Data Based On 21,000 Btuh Per Burner, Derated 4 Percent For Each 1000 Ft Above Sea Level)

| ALTITUDE RANGE (FT) | | AVG GAS HEAT VALUE (BTU/CU FT) | SPECIFIC GRAVITY OF NATURAL GAS | | | | | | | |
|---|---|---|---|---|---|---|---|---|---|---|
| | | | 0.58 | | 0.60 | | 0.62 | | 0.64 | |
| | | | Orifice No. | Manifold Pressure | Orifice No. | Manifold Pressure | Orifice No. | Manifold Pressure | Orifice No. | Manifold Pressure |
| U.S.A. and Canada | 0 to 2000 | 900 | 42 | 3.2 | 42 | 3.3 | 42 | 3.4 | 42 | 3.5 |
| | | 925 | 43 | 3.7 | 43 | 3.8 | 42 | 3.2 | 42 | 3.3 |
| | | 950 | 43 | 3.5 | 43 | 3.6 | 43 | 3.7 | 43 | 3.8 |
| | | 975 | 43 | 3.3 | 43 | 3.4 | 43 | 3.5 | 43 | 3.7 |
| | | 1000 | 44 | 3.6 | 43 | 3.3 | 43 | 3.4 | 43 | 3.5 |
| | | 1025 | 44 | 3.4 | 44 | 3.6 | 43 | 3.2 | 43 | 3.3 |
| | | 1050 | 44 | 3.3 | 44 | 3.4 | 44 | 3.5 | 43 | 3.2 |
| | | 1075 | 45 | 3.8 | 44 | 3.2 | 44 | 3.3 | 44 | 3.4 |
| | | 1100 | 46 | 3.8 | 45 | 3.7 | 44 | 3.2 | 44 | 3.3 |
| ALTITUDE RANGE (FT) | | AVG GAS HEAT VALUE (BTU/CU FT) | SPECIFIC GRAVITY OF NATURAL GAS | | | | | | | |
| | | | 0.58 | | 0.60 | | 0.62 | | 0.64 | |
| | | | Orifice No. | Manifold Pressure | Orifice No. | Manifold Pressure | Orifice No. | Manifold Pressure | Orifice No. | Manifold Pressure |
| U.S.A. and Canada | U.S.A. Altitudes 2001 to 3000 or Canada Altitudes 2000 to 4500 | 800 | 43 | 3.8 | 42 | 3.2 | 42 | 3.3 | 42 | 3.4 |
| | | 825 | 43 | 3.5 | 43 | 3.7 | 43 | 3.8 | 42 | 3.2 |
| | | 850 | 43 | 3.3 | 43 | 3.5 | 43 | 3.6 | 43 | 3.7 |
| | | 875 | 43 | 3.2 | 43 | 3.3 | 43 | 3.4 | 43 | 3.5 |
| | | 900 | 43 | 3.0 | 43 | 3.1 | 43 | 3.2 | 43 | 3.3 |
| | | 925 | 43 | 2.8 | 43 | 2.9 | 43 | 3.0 | 43 | 3.1 |
| | | 950 | 43 | 2.7 | 43 | 2.8 | 43 | 2.9 | 43 | 2.9 |
| | | 975 | 43 | 2.5 | 43 | 2.6 | 43 | 2.7 | 43 | 2.8 |
| | | 1000 | 43 | 2.4 | 43 | 2.5 | 43 | 2.6 | 43 | 2.7 |
| ALTITUDE RANGE (FT) | | AVG GAS HEAT VALUE (BTU/CU FT) | SPECIFIC GRAVITY OF NATURAL GAS | | | | | | | |
| | | | 0.58 | | 0.60 | | 0.62 | | 0.64 | |
| | | | Orifice No. | Manifold Pressure | Orifice No. | Manifold Pressure | Orifice No. | Manifold Pressure | Orifice No. | Manifold Pressure |
| U.S.A. Only | 3001 to 4000 | 775 | 43 | 3.5 | 43 | 3.7 | 43 | 3.8 | 42 | 3.2 |
| | | 800 | 43 | 3.3 | 43 | 3.4 | 43 | 3.5 | 43 | 3.7 |
| | | 825 | 43 | 3.1 | 43 | 3.2 | 43 | 3.3 | 43 | 3.4 |
| | | 850 | 43 | 2.9 | 43 | 3.0 | 43 | 3.1 | 43 | 3.2 |
| | | 875 | 43 | 2.8 | 43 | 2.9 | 43 | 3.0 | 43 | 3.1 |
| | | 900 | 43 | 2.6 | 43 | 2.7 | 43 | 2.8 | 43 | 2.9 |
| | | 925 | 43 | 2.5 | 43 | 2.6 | 43 | 2.7 | 43 | 2.7 |
| | | 950 | 43 | 2.4 | 43 | 2.4 | 43 | 2.5 | 43 | 2.6 |
| ALTITUDE RANGE (FT) | | AVG GAS HEAT VALUE (BTU/CU FT) | SPECIFIC GRAVITY OF NATURAL GAS | | | | | | | |
| | | | 0.58 | | 0.60 | | 0.62 | | 0.64 | |
| | | | Orifice No. | Manifold Pressure | Orifice No. | Manifold Pressure | Orifice No. | Manifold Pressure | Orifice No. | Manifold Pressure |
| U.S.A. Only | 4001 to 5000 | 750 | 43 | 3.3 | 43 | 3.4 | 43 | 3.5 | 43 | 3.6 |
| | | 775 | 43 | 3.1 | 43 | 3.2 | 43 | 3.3 | 43 | 3.4 |
| | | 800 | 43 | 2.9 | 43 | 3.0 | 43 | 3.1 | 43 | 3.2 |
| | | 825 | 43 | 2.7 | 43 | 2.8 | 43 | 2.9 | 43 | 3.0 |
| | | 850 | 43 | 2.6 | 43 | 2.7 | 43 | 2.8 | 43 | 2.8 |
| | | 875 | 43 | 2.4 | 43 | 2.5 | 43 | 2.6 | 43 | 2.7 |
| | | 900 | 43 | 2.3 | 43 | 2.4 | 43 | 2.5 | 43 | 2.5 |
| | | 925 | 43 | 2.2 | 43 | 2.2 | 43 | 2.3 | 43 | 2.4 |

* Orifice numbers 43 are factory installed

d. BRIEFLY remove insulated terminal wire from the draft safeguard (DSS) switch until LED goes out, then reconnect it.

**NOTE:** If wire to LS or DSS is disconnected longer than 4 sec, main blower starts, and retrieval request is ignored.

2. When above items have been completed, the LED flashes status code 4 times. Record this status code for further troubleshooting.
3. Check LED status. If no previous faults in history, control will flash status code 11.

## Table 12—Orifice Size* And Manifold Pressure For Gas Input Rate (Continued)
## (Tabulated Data Based On 21,000 Btuh Per Burner, Derated 4 Percent For Each 1000 Ft Above Sea Level)

| ALTITUDE RANGE (FT) | | AVG GAS HEAT VALUE AT ALTITUDE (BTU/CU FT) | SPECIFIC GRAVITY OF NATURAL GAS | | | | | | | |
|---|---|---|---|---|---|---|---|---|---|---|
| | | | 0.58 | | 0.60 | | 0.62 | | 0.64 | |
| | | | Orifice No. | Manifold Pressure | Orifice No. | Manifold Pressure | Orifice No. | Manifold Pressure | Orifice No. | Manifold Pressure |
| U.S.A. Only | 5001 to 6000 | 725 | 43 | 3.1 | 43 | 3.2 | 43 | 3.3 | 43 | 3.4 |
| | | 750 | 43 | 2.9 | 43 | 3.0 | 43 | 3.1 | 43 | 3.2 |
| | | 775 | 43 | 2.7 | 43 | 2.8 | 43 | 2.9 | 43 | 3.0 |
| | | 800 | 43 | 2.5 | 43 | 2.6 | 43 | 2.7 | 43 | 2.8 |
| | | 825 | 43 | 2.4 | 43 | 2.5 | 43 | 2.5 | 43 | 2.6 |
| | | 850 | 43 | 2.2 | 43 | 2.3 | 43 | 2.4 | 43 | 2.5 |
| | | 875 | 43 | 2.1 | 43 | 2.2 | 43 | 2.3 | 43 | 2.3 |
| | | 900 | 43 | 2.0 | 43 | 2.1 | 43 | 2.1 | 43 | 2.2 |
| ALTITUDE RANGE (FT) | | AVG GAS HEAT VALUE AT ALTITUDE (BTU/CU FT) | SPECIFIC GRAVITY OF NATURAL GAS | | | | | | | |
| | | | 0.58 | | 0.60 | | 0.62 | | 0.64 | |
| | | | Orifice No. | Manifold Pressure | Orifice No. | Manifold Pressure | Orifice No. | Manifold Pressure | Orifice No. | Manifold Pressure |
| U.S.A. Only | 6001 to 7000 | 675 | 43 | 3.1 | 43 | 3.2 | 43 | 3.3 | 43 | 3.4 |
| | | 700 | 43 | 2.9 | 43 | 3.0 | 43 | 3.1 | 43 | 3.2 |
| | | 725 | 43 | 2.7 | 43 | 2.8 | 43 | 2.9 | 43 | 2.9 |
| | | 750 | 43 | 2.5 | 43 | 2.6 | 43 | 2.7 | 43 | 2.8 |
| | | 775 | 43 | 2.3 | 43 | 2.4 | 43 | 2.5 | 43 | 2.6 |
| | | 800 | 43 | 2.2 | 43 | 2.3 | 43 | 2.3 | 43 | 2.4 |
| | | 825 | 43 | 2.1 | 43 | 2.1 | 43 | 2.2 | 43 | 2.3 |
| | | 850 | 48 | 3.7 | 43 | 2.0 | 43 | 2.1 | 43 | 2.1 |
| ALTITUDE RANGE (FT) | | AVG GAS HEAT VALUE AT ALTITUDE (BTU/CU FT) | SPECIFIC GRAVITY OF NATURAL GAS | | | | | | | |
| | | | 0.58 | | 0.60 | | 0.62 | | 0.64 | |
| | | | Orifice No. | Manifold Pressure | Orifice No. | Manifold Pressure | Orifice No. | Manifold Pressure | Orifice No. | Manifold Pressure |
| U.S.A. Only | 7001 to 8000 | 650 | 43 | 2.9 | 43 | 3.0 | 43 | 3.1 | 43 | 3.2 |
| | | 675 | 43 | 2.7 | 43 | 2.7 | 43 | 2.8 | 43 | 2.9 |
| | | 700 | 43 | 2.5 | 43 | 2.6 | 43 | 2.6 | 43 | 2.7 |
| | | 725 | 43 | 2.3 | 43 | 2.4 | 43 | 2.5 | 43 | 2.5 |
| | | 750 | 43 | 2.1 | 43 | 2.2 | 43 | 2.3 | 43 | 2.4 |
| | | 775 | 43 | 2.0 | 43 | 2.1 | 43 | 2.2 | 43 | 2.2 |
| | | 800 | 48 | 3.6 | 48 | 3.7 | 43 | 2.0 | 43 | 2.1 |
| | | 825 | 48 | 3.3 | 48 | 3.5 | 48 | 3.6 | 48 | 3.7 |
| ALTITUDE RANGE (FT) | | AVG GAS HEAT VALUE AT ALTITUDE (BTU/CU FT) | SPECIFIC GRAVITY OF NATURAL GAS | | | | | | | |
| | | | 0.58 | | 0.60 | | 0.62 | | 0.64 | |
| | | | Orifice No. | Manifold Pressure | Orifice No. | Manifold Pressure | Orifice No. | Manifold Pressure | Orifice No. | Manifold Pressure |
| U.S.A. Only | 8001 to 9000 | 625 | 43 | 2.7 | 43 | 2.7 | 43 | 2.8 | 43 | 2.9 |
| | | 650 | 43 | 2.5 | 43 | 2.5 | 43 | 2.6 | 43 | 2.7 |
| | | 675 | 43 | 2.3 | 43 | 2.4 | 43 | 2.4 | 43 | 2.5 |
| | | 700 | 43 | 2.1 | 43 | 2.2 | 43 | 2.3 | 43 | 2.3 |
| | | 725 | 48 | 3.7 | 43 | 2.0 | 43 | 2.1 | 43 | 2.2 |
| | | 750 | 48 | 3.5 | 48 | 3.6 | 48 | 3.7 | 43 | 2.0 |
| | | 775 | 49 | 3.8 | 48 | 3.4 | 48 | 3.5 | 48 | 3.6 |

* Orifice numbers 43 are factory installed

## Table 12—Orifice Size* And Manifold Pressure For Gas Input Rate (Continued)
## (Tabulated Data Based On 21,000 Btuh Per Burner, Derated 4 Percent For Each 1000 Ft Above Sea Level)

| ALTITUDE RANGE (FT) | | AVG GAS HEAT VALUE AT ALTITUDE (BTU/CU FT) | SPECIFIC GRAVITY OF NATURAL GAS | | | | | | | |
|---|---|---|---|---|---|---|---|---|---|---|
| | | | 0.58 | | 0.60 | | 0.62 | | 0.64 | |
| | | | Orifice No. | Manifold Pressure | Orifice No. | Manifold Pressure | Orifice No. | Manifold Pressure | Orifice No. | Manifold Pressure |
| U.S.A. Only | 9001 to 10,000 | 600 | 43 | 2.4 | 43 | 2.5 | 43 | 2.6 | 43 | 2.7 |
| | | 625 | 43 | 2.3 | 43 | 2.3 | 43 | 2.4 | 43 | 2.5 |
| | | 650 | 43 | 2.1 | 43 | 2.2 | 43 | 2.2 | 43 | 2.3 |
| | | 675 | 48 | 3.6 | 48 | 3.8 | 43 | 2.1 | 43 | 2.1 |
| | | 700 | 48 | 3.4 | 48 | 3.5 | 48 | 3.6 | 48 | 3.7 |
| | | 725 | 49 | 3.7 | 49 | 3.8 | 48 | 3.4 | 48 | 3.5 |

* Orifice numbers 43 are factory installed

**SERVICE**

If status code recall is needed, briefly remove then reconnect one main limit wire to display stored status code. On RED LED boards do not remove power or blower door before initiating status code recall. After status code recall is completed component test will occur.

**LED CODE** **STATUS**
**CONTINUOUS OFF** - Check for 115VAC at L1 and L2, and 24VAC at SEC-1 and SEC-2.
**CONTINUOUS ON** - Control has 24VAC power.
**RAPID FLASHING** - Line voltage (115VAC) polarity reversed. If twinned, refer to twinning kit instructions.

EACH OF THE FOLLOWING STATUS CODES IS A TWO DIGIT NUMBER WITH THE FIRST DIGIT DETERMINED BY THE NUMBER OF SHORT FLASHES AND THE SECOND DIGIT BY THE NUMBER OF LONG FLASHES.

**11 NO PREVIOUS CODE** - Stored status code is erased automatically after 72 hours. On RED LED boards stored status codes can also be erased when power (115 VAC or 24 VAC) to control is interrupted.
**12 BLOWER ON AFTER POWER UP** (115 VAC or 24 VAC) -Blower runs for 90 seconds, if unit is powered up during a call for heat (R-W closed) or R-W opens during blower on-delay.
**13 LIMIT CIRCUIT LOCKOUT** - Lockout occurs if the limit, draft safeguard, flame rollout, or blocked vent switch (if used) is open longer than 3 minutes.
- Control will auto reset after three hours. - Refer to #33.
**14 IGNITION LOCKOUT -** Control will auto-reset after three hours. Refer to #34.
**21 GAS HEATING LOCKOUT** - Control will NOT auto reset.
Check for: - Mis-wired gas valve -Defective control (valve relay)
**22 ABNORMAL FLAME-PROVING SIGNAL** - Flame is proved while gas valve is de-energized. Inducer will run until fault is cleared. Check for: - Leaky gas valve
- Stuck-open gas valve
**23 PRESSURE SWITCH DID NOT OPEN** Check for:
- Obstructed pressure tubing. - Pressure switch stuck closed.
**24 SECONDARY VOLTAGE FUSE IS OPEN** Check for:
- Short circuit in secondary voltage (24VAC) wiring.

**COMPONENT TEST**

To initiate the component test sequence, shut OFF the room thermostat or disconnect the "R" thermostat lead. Briefly short the TEST/TWIN terminal to the "Com 24V" terminal. Status LED will flash code and then turn ON the inducer motor. The inducer motor will run for the entire component test. The hot surface ignitor, blower motor fan speed (on AMBER LED boards only) blower motor-heat speed, and blower motor-cool speed will be turned ON for 10-15 seconds each. Gas Valve and Humidifier will not be turned on.

**327596-101 REV. B**

**31 PRESSURE SWITCH DID NOT CLOSE OR REOPENED** - If open longer than five minutes, inducer shuts off for 15 minutes before retry. Check for: - Excessive wind
- Proper vent sizing - Defective inducer motor
- Low inducer voltage (115VAC) - Defective pressure switch
- Inadequate combustion air supply - Disconnected or obstructed pressure tubing
- Low inlet gas pressure (if LGPS used) - Restricted vent
If it opens during blower on-delay period, blower will come on for the selected blower off-delay.
**33 LIMIT CIRCUIT FAULT -** Indicates a limit, draft safeguard, flame rollout, or blocked vent switch (if used) is open. Blower will run for 4 minutes or until open switch remakes whichever is longer. If open longer than 3 minutes, code changes to lockout #13.
If open less than 3 minutes status code #33 continues to flash until blower shuts off.
Flame rollout switch and BVSS require manual reset. Check for: - Restricted vent
- Proper vent sizing - Loose blower wheel. - Excessive wind
- Dirty filter or restricted duct system.
- Defective blower motor or capacitor. - Defective switch or connections.
- Inadequate combustion air supply (Flame Roll-out Switch open).
**34 IGNITION PROVING FAILURE** - Control will try three more times before lockout #14 occurs. If flame signal lost during blower on-delay period, blower will come on for the selected blower off-delay. Check for: - Flame sensor must not be grounded
- Oxide buildup on flame sensor (clean with fine steel wool).
- Proper flame sense microamps (.5 microamps D.C. min., 4.0 - 6.0 nominal).
- Gas valve defective or gas valve turned off - Manual valve shut-off
- Defective Hot Surface Ignitor - Control ground continuity
- Low inlet gas pressure - Inadequate flame carryover or rough ignition
- Green/Yellow wire **MUST** be connected to furnace sheet metal
**45 CONTROL CIRCUITRY LOCKOUT** Auto-reset after one hour lockout due to;
- Gas valve relay stuck open - Flame sense circuit failure - Software check error
Reset power to clear lockout. Replace control if status code repeats.

A04223

→ **Fig. 55—Service Label**

### Step 2—Care and Maintenance

**⚠ WARNING**

**FIRE OR EXPLOSION HAZARD**
Failure to follow this warning could result in corrosion of the heat exchanger, fire, personal injury, or death.
Never store anything on, near, or in contact with the furnace, such as:
1. Spray or aerosol cans, rags, brooms, dust mops, vacuum cleaners, or other cleaning tools.
2. Soap powders, bleaches, waxes or other cleaning compounds, plastic or plastic containers, gasoline, kerosene, cigarette lighter fluid, dry cleaning fluids, or other volatile fluids.
3. Paint thinners and other painting compounds, paper bags, or other paper products.

For continuing high performance and to minimize possible equipment failure, periodic maintenance must be performed on this equipment. Consult your local dealer about proper frequency of maintenance and the availability of a maintenance contract.

**⚠ WARNING**

**ELECTRICAL SHOCK AND FIRE HAZARD**
Failure to follow this warning could result in personal injury, death or product damage.
Turn off the gas and electrical supplies to the unit before performing any maintenance or service. Follow the operating instructions on the label attached to the furnace.

**⚠ WARNING**

**CARBON MONOXIDE POISONING AND FIRE HAZARD**
Failure to follow this warning could result in fire, personal injury, or death.
Never operate unit without a filter or with filter access door removed.

**Table 13—Filter Size Information (IN.)**

| FURNACE CASING WIDTH | FILTER SIZE | | FILTER TYPE |
|---|---|---|---|
| | Side Return | Bottom Return | |
| **14-1/2** | 16 X 25 X 1 | 14 X 25 X 1 | Cleanable* |
| **17-1/2** | 16 X 25 X 1 | 16 X 25 X 1 | Cleanable* |
| **21** | 16 X 25 X 1 | 20 X 25 X 1 | Cleanable* |
| **24** | 16 X 25 X 1 | 24 X 25 X 1 | Cleanable* |

* Recommended

**⚠ CAUTION**

→ **CUT HAZARD**
Failure to follow this caution may result in personal injury. Sheet metal parts may have sharp edges or burrs. Use care and wear appropriate protective clothing, safety glasses and gloves when handling parts and servicing furnaces.

The minimum maintenance on this furnace is as follows:

1. Check and clean air filter each month or more frequently if required. Replace if torn.
2. Check blower motor and wheel for cleanliness each heating and cooling season. Clean as necessary.
3. Check electrical connections for tightness and controls for proper operation each heating season. Service as necessary.
4. Inspect burner compartment before each heating season for rust, corrosion, soot or excessive dust. If necessary, have furnace and burner serviced by a qualified service agency.
5. Inspect the vent pipe/vent system before each heating season for rust, corrosion, water leakage, sagging pipes or broken fittings. Have vent pipes/vent system serviced by a qualified service agency.
6. Inspect any accessories attached to the furnace such as a humidifier or electronic air cleaner. Perform any service or maintenance to the accessories as recommended in the accessory instructions.

CLEANING AND/OR REPLACING AIR FILTER

The air filter arrangement will vary depending on the application. The filter is exterior to the furnace casing.

**NOTE:** If the filter has an airflow direction arrow, the arrow must point towards the blower.

**⚠ CAUTION**

→ **CUT HAZARD**
Failure to follow this caution may result in personal injury. Sheet metal parts may have sharp edges or burrs. Use care and wear appropriate protective clothing, safety glasses and gloves when handling parts and servicing furnaces.

**Media cabinet filter procedures** :

**NOTE:** Media cabinet is included with single-stage deluxe furnace.

1. Turn off electrical supply to furnace before removing filter access door.
2. Remove filter cabinet door.
3. Slide filter out of cabinet.
4. If equipped with permanent, washable 1-inch filter, clean filter by spraying cold tap water through filter in opposite direction of airflow. Rinse filter and let dry. Oiling or coating of the filter is not recommended. See Table 13 for size information.
5. If equipped with factory-specified disposable media filter, replace only with media filter having the same part number and size. For expandable replacement media, refer to the instructions included with the replacement media. If equipped with accessory KGAFR0301ALL external filter rack, See Table 13.
6. Slide filter into cabinet.
7. Replace filter cabinet door.
8. Turn on electrical supply to furnace.

BLOWER MOTOR AND WHEEL

**⚠ WARNING**

**ELECTRICAL SHOCK HAZARD**
Failure to follow this warning could result in personal injury or death.
Blower access door switch opens 115-v power to control. No component operation can occur unless switch is closed. Caution must be taken when manually closing this switch for service purposes.

**NOTE:** The blower wheel should not be dropped or bent as balance will be affected.

**The following steps should be performed by a qualified service agency.**

To ensure long life and high efficiency, clean accumulated dirt and grease from blower wheel and motor annually.

The inducer and blower motors are pre-lubricated and require no additional lubrication. These motors can be identified by the absence of oil ports on each end of the motor.

Clean blower motor and wheel as follows:

1. Turn off electrical supply to furnace.
2. Loosen the thumbscrew on outer door and remove outer door.
3. For downflow or horizontal furnaces having vent pipes within the furnace that pass in front of the blower access door:
   a. Disconnect vent connector from furnace vent elbow.
   b. Disconnect and remove short piece of vent pipe from within furnace.
4. Remove 2 screws from blower access door and remove blower access door.
5. Disconnect blower leads from furnace control. Record wire color and location for reassembly. All other factory wires can be left connected, but field thermostat connections may need to be disconnected depending on their length and routing.
6. Remove 2 screws holding control box to blower shelf.
7. Hang control box from front of furnace casing and away from blower compartment.
8. Remove 2 screws holding blower assembly to blower deck and slide blower assembly out of furnace.
9. Clean blower wheel and motor using a vacuum with soft brush attachment. Blower wheel blades may be cleaned with a small paint or flux brush. Do not remove or disturb balance weights (clips) on blower wheel blades.
10. Vacuum any loose dust from blower housing, wheel and motor.
11. If a greasy residue is present on blower wheel, remove wheel from the blower housing and wash it with an appropriate degreaser. To remove wheel:

**NOTE:** Before disassembly, mark blower motor, and blower housing so motor and each arm is positioned at the same location during reassembly.

a. Disconnect capacitor wires and ground wire attached to blower housing.

b. Remove screws securing cutoff plate and remove cutoff plate from housing.

c. Loosen set screw holding blower wheel on motor shaft (160+/-20 in.-lb. when reassembling).

d. Remove bolts holding motor to blower housing and slide motor out of wheel (40+/-10 in.-lb. when reassembling).

e. Remove blower wheel from housing.

f. Clean wheel and housing.

12. Reassemble motor and blower by reversing steps 11f through 11a, finishing with 11a. Be sure to reattach ground wire to the blower housing.
13. Verify that blower wheel is centered in blower housing and set screw contacts the flat portion of the motor shaft. Loosen set screw on blower wheel and reposition if necessary.
14. Spin the blower wheel by hand to verify that the wheel does not rub on the housing.
15. Reinstall blower assembly in furnace.
16. Reinstall control box assembly in furnace.

**⚠ CAUTION**

**UNIT DAMAGE HAZARD**

Failure to follow this caution may result in shortened heat exchanger life.

Heating fan speed(s) MUST be adjusted to provide proper air temperature rise as specified on the rating plate. Recommended operation is at the midpoint of the rise range or slightly above. Refer to ″SET TEMPERATURE RISE″ under START-UP, ADJUSTMENT, and SAFETY CHECK.

**NOTE:** Refer to Table 9 for motor speed lead relocation if leads were not identified before disconnection.

17. Reconnect blower leads to furnace control. Refer to furnace wiring diagram, and connect thermostat leads if previously disconnected.
18. To check blower for proper rotation:

a. Turn on electrical supply.

**⚠ WARNING**

**ELECTRICAL SHOCK HAZARD**

→ Failure to follow this warning could result in electrical shock, personal injury, or death.

Blower access door switch opens 115-v power to furnace control. No component operation can occur unless switch is closed. Exercise caution to avoid electrical shock from exposed electrical components when manually closing this switch for service purposes.

b. Manually close blower access door switch.

**NOTE:** If thermostat terminals are jumpered at the time blower access door switch is closed, blower will run for 90 sec before beginning a heating or cooling cycle.

c. Perform component self-test as shown at the bottom of the SERVICE label, located on the front of blower access door.

d. Verify blower is rotating in the correct direction

19. If furnace is operating properly, RELEASE BLOWER ACCESS DOOR SWITCH. Remove any jumpers or reconnect any disconnected thermostat leads. Replace blower access door.
20. Downflow or horizontal furnaces with vent pipe through furnace only:

a. Install and connect short piece of vent pipe inside furnace to existing vent.

b. Connect vent connector to vent elbow.

21. Reinstall casing door.
22. Turn on gas supply and cycle furnace through one complete heating and cooling cycle. Verify the furnace temperature rise as shown in “Adjustments” Section. Adjust temperature rise as shown in “Adjustments” Section. If outdoor temperature is below 70°F, turn off circuit breaker to outdoor unit before running furnace in the cooling cycle. Turn outdoor circuit breaker on after completing cooling cycle.

CLEANING HEAT EXCHANGER

**The following steps should be performed by a qualified service agency:**

**NOTE:** If the heat exchangers get a heavy accumulation of soot and carbon, they should be replaced rather than trying to clean them thoroughly. A heavy build-up of soot and carbon indicates that a problem exists which needs to be corrected, such as improper adjustment of manifold pressure, insufficient or poor quality combustion air, incorrect size or damaged manifold orifice(s), improper gas, or a restricted heat exchanger. Action must be taken to correct the problem.

If it becomes necessary to clean the heat exchangers because of dust or corrosion, proceed as follows:

1. Turn OFF gas and electrical power to furnace.
2. Remove outer access door.
3. Disconnect vent connector from furnace vent elbow.
4. For downflow or horizontal furnace having an internal vent pipe, remove internal vent pipe within the casing.
5. → Disconnect wires to the following components. Mark wires to aid in reconnection of (be careful when disconnecting wires from switches because damage may occur):

a. Draft safeguard switch.

b. Inducer motor.

c. Pressure switch(es).

d. Limit overtemperature switch.

e. Gas valve.

f. Hot surface igniter.

g. Flame-sensing electrode.

h. Flame rollout switches.

6. Remove screws that fasten the collector box assembly to the cell panel. Be careful not to damage the collector box. Inducer assembly and elbow need not be removed from collector box.
7. Disconnect gas line from gas manifold.
8. → Remove the 5 screws that attach the burner assembly to the cell panel. The gas valve and individual burners need not be removed from support assembly. Remove NOx baffles if installed.

**NOTE:** Be very careful when removing burner assembly to avoid breaking igniter. See Fig. 57 and 58 for correct igniter location.

9. Using field-provided 25-caliber rifle cleaning brush, 36-in. long, 1/4″ diameter steel spring cable, a variable speed, reversible electric drill, and vacuum cleaner, clean cells as follows:

a. Remove metal screw fitting from wire brush to allow insertion into cable.

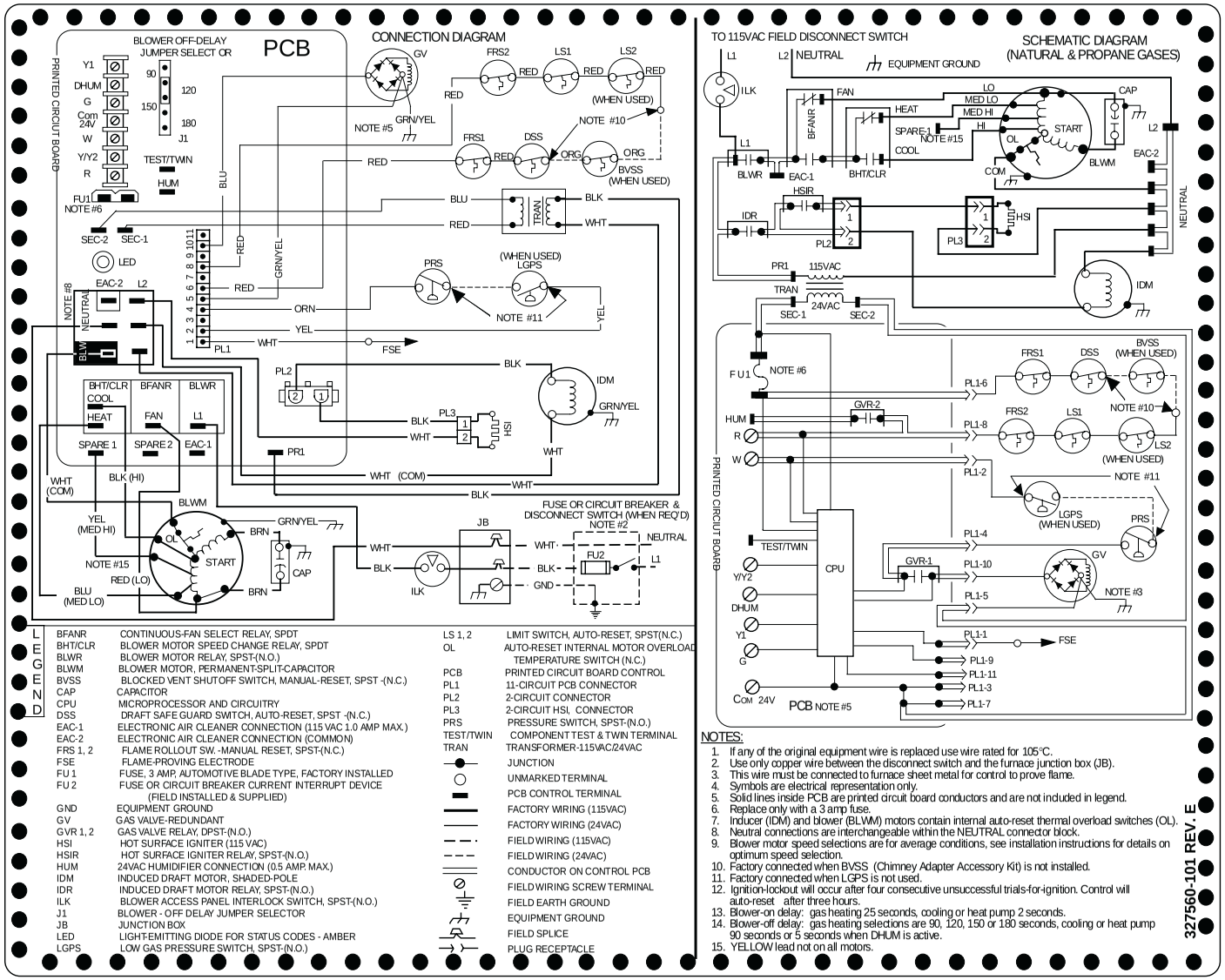


## LEGEND

| | |
|---|---|
| BFANR | CONTINUOUS-FAN SELECT RELAY, SPDT |
| BHT/CLR | BLOWER MOTOR SPEED CHANGE RELAY, SPDT |
| BLWR | BLOWER MOTOR RELAY, SPST-(N.O.) |
| BLWM | BLOWER MOTOR, PERMANENT-SPLIT-CAPACITOR |
| BVSS | BLOCKED VENT SHUTOFF SWITCH, MANUAL-RESET, SPST -(N.C.) |
| CAP | CAPACITOR |
| CPU | MICROPROCESSOR AND CIRCUITRY |
| DSS | DRAFT SAFE GUARD SWITCH, AUTO-RESET, SPST -(N.C.) |
| EAC-1 | ELECTRONIC AIR CLEANER CONNECTION (115 VAC 1.0 AMP MAX.) |
| EAC-2 | ELECTRONIC AIR CLEANER CONNECTION (COMMON) |
| FRS 1, 2 | FLAME ROLLOUT SW. -MANUAL RESET, SPST-(N.C.) |
| FSE | FLAME-PROVING ELECTRODE |
| FU 1 | FUSE, 3 AMP, AUTOMOTIVE BLADE TYPE, FACTORY INSTALLED |
| FU 2 | FUSE OR CIRCUIT BREAKER CURRENT INTERRUPT DEVICE (FIELD INSTALLED & SUPPLIED) |
| GND | EQUIPMENT GROUND |
| GV | GAS VALVE-REDUNDANT |
| GVR 1, 2 | GAS VALVE RELAY, DPST-(N.O.) |
| HSI | HOT SURFACE IGNITER (115 VAC) |
| HSIR | HOT SURFACE IGNITER RELAY, SPST-(N.O.) |
| HUM | 24VAC HUMIDIFIER CONNECTION (0.5 AMP. MAX.) |
| IDM | INDUCED DRAFT MOTOR, SHADED-POLE |
| IDR | INDUCED DRAFT MOTOR RELAY, SPST-(N.O.) |
| ILK | BLOWER ACCESS PANEL INTERLOCK SWITCH, SPST-(N.O.) |
| J1 | BLOWER - OFF DELAY JUMPER SELECTOR |
| JB | JUNCTION BOX |
| LED | LIGHT-EMITTING DIODE FOR STATUS CODES - AMBER |
| LGPS | LOW GAS PRESSURE SWITCH, SPST-(N.O.) |
| LS 1, 2 | LIMIT SWITCH, AUTO-RESET, SPST(N.C.) |
| OL | AUTO-RESET INTERNAL MOTOR OVERLOAD TEMPERATURE SWITCH (N.C.) |
| PCB | PRINTED CIRCUIT BOARD CONTROL |
| PL1 | 11-CIRCUIT PCB CONNECTOR |
| PL2 | 2-CIRCUIT CONNECTOR |
| PL3 | 2-CIRCUIT HSI, CONNECTOR |
| PRS | PRESSURE SWITCH, SPST-(N.O.) |
| TEST/TWIN | COMPONENT TEST & TWIN TERMINAL |
| TRAN | TRANSFORMER-115VAC/24VAC |
| | JUNCTION |
| | UNMARKED TERMINAL |
| | PCB CONTROL TERMINAL |
| | FACTORY WIRING (115VAC) |
| | FACTORY WIRING (24VAC) |
| | FIELD WIRING (115VAC) |
| | FIELD WIRING (24VAC) |
| | CONDUCTOR ON CONTROL PCB |
| | FIELD WIRING SCREW TERMINAL |
| | FIELD EARTH GROUND |
| | EQUIPMENT GROUND |
| | FIELD SPLICE |
| | PLUG RECEPTACLE |

NOTES:

1. If any of the original equipment wire is replaced use wire rated for 105°C.
2. Use only copper wire between the disconnect switch and the furnace junction box (JB).
3. This wire must be connected to furnace sheet metal for control to prove flame.
4. Symbols are electrical representation only.
5. Solid lines inside PCB are printed circuit board conductors and are not included in legend.
6. Replace only with a 3 amp fuse.
7. Inducer (IDM) and blower (BLWM) motors contain internal auto-reset thermal overload switches (OL).
8. Neutral connections are interchangeable within the NEUTRAL connector block.
9. Blower motor speed selections are for average conditions, see installation instructions for details on optimum speed selection.
10. Factory connected when BVSS (Chimney Adapter Accessory Kit) is not installed.
11. Factory connected when LGPS is not used.
12. Ignition-lockout will occur after four consecutive unsuccessful trials-for-ignition. Control will auto-reset after three hours.
13. Blower-on delay: gas heating 25 seconds, cooling or heat pump 2 seconds.
14. Blower-off delay: gas heating selections are 90, 120, 150 or 180 seconds, cooling or heat pump 90 seconds or 5 seconds when DHUM is active.
15. YELLOW lead not on all motors.

327560-101 REV. E

→ **Fig. 56—Wiring Diagram**

A04222

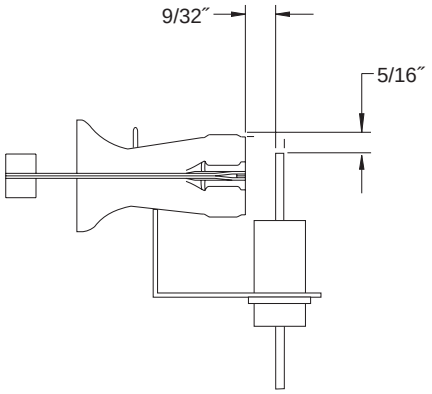


A05025

→ **Fig. 57—Igniter Position-Side View**

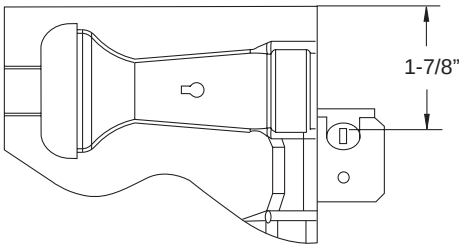


A05026

→ **Fig. 58—Igniter Position-Top View**

b. Insert the twisted wire end of brush into end of spring cable, and crimp tight with crimping tool or crimp by striking with ball-peen hammer. TIGHTNESS IS VERY IMPORTANT.

**NOTE:** The materials needed in item 9 can usually be purchased at local hardware stores.

(1.) Attach variable-speed, reversible drill to the end of spring cable (end opposite brush).

(2.) Insert brush end of cable into the outlet opening of cell and slowly rotate with drill. DO NOT force cable. Gradually insert cable into upper pass of cell. (See Fig. 59.)

(3.) Work cable in and out of cell 3 or 4 times to obtain sufficient cleaning. DO NOT pull cable with great force. Reverse drill and gradually work cable out.

(4.) Insert brush end of cable in burner inlet opening of cell, and proceed to clean 2 lower passes of cell in same manner as upper pass.

(5.) Repeat foregoing procedures until each cell in furnace has been cleaned.

(6.) Using vacuum cleaner, remove residue from each cell.

(7.) Using vacuum cleaner with soft brush attachment, clean burner assembly.

(8.) Clean flame sensor with fine steel wool.

(9.) Install NOx baffles (if removed).

(10.) Reinstall burner assembly. Center burners in cell openings.

10. Remove old sealant from cell panel and collector box flange.
11. Spray releasing agent on the heat exchanger cell panel where collector box assembly contacts cell panel.

**NOTE:** A releasing agent such as cooking spray or equivalent (must not contain corn or canola oil, aromatic or halogenated hydrocarbons or inadequate seal may occur) and RTV sealant

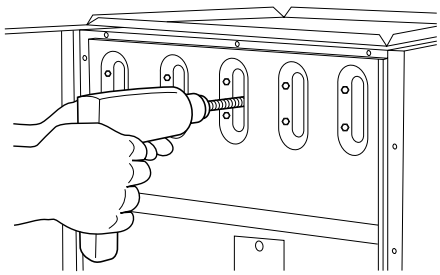

A91252

**Fig. 59—Cleaning Heat Exchanger Cell**

(G.E. 162, 6702, or Dow-Corning 738) are needed before starting installation. DO NOT substitute any other type of RTV sealant. G.E. 162 (P771-9003) is available through RCD in 3-oz tubes.

12. Apply new sealant to flange of collector box and attach to cell panel using existing screws, making sure all screws are secure.
13. Reconnect wires to the following components. (Use connection diagram on wiring label, if wires were not marked for reconnection locations.):
    a. Draft safeguard switch.
    b. Inducer motor.
    c. Pressure switch(es).
    d. Limit over-temperature switch.
    e. Gas valve.
    f. Hot surface igniter.
    g. Flame-sensing electrode.
    h. Flame rollout switches.
    i. Install NOx baffles (if removed).
14. Reinstall internal vent pipe, if applicable.
15. Reinstall vent connector on furnace vent elbow. Securely fasten vent connector to vent elbow with 2 field-supplied, corrosion-resistant, sheet metal screws located 180° apart.
16. Replace blower access door only, if it was removed.
17. Set thermostat above room temperature and check furnace for proper operation.
18. Verify blower airflow and speed changes between heating and cooling.

**⚠ WARNING**

**FIRE OR EXPLOSION HAZARD**
Failure to follow this warning could result in fire, personal injury, or death.
Never use a match or other open flame to check for gas leaks. Use a soap-and-water solution.

19. Check for gas leaks.
20. Replace outer access door.

### Step 3—Sequence of Operation

**NOTE:** Furnace control must be grounded for proper operation or control will lock out. Control is grounded through green/yellow wire routed to gas valve and manifold bracket screw.

Using the schematic diagram in Fig. 56, follow the sequence of operation through the different modes. Read and follow the wiring diagram very carefully.

**NOTE:** If a power interruption occurs during a call for heat (W), the control will start a 90-second blower-only ON period two seconds after power is restored, if the thermostat is still calling for gas heating. The Amber LED light will flash code 12 during the

90-second period, after which the LED will be ON continuous, as long as no faults are detected. After the 90-second period, the furnace will respond to the thermostat normally.

The blower door must be installed for power to be conducted through the blower door interlock switch ILK to the furnace control CPU, transformer TRAN, inducer motor IDM, blower motor BLWM, hot-surface igniter HSI, and gas valve GV.

1. **Heating**
   (See Fig. 25 for thermostat connections.)
   The wall thermostat ″calls for heat,″ closing the R-to-W circuit. The furnace control performs a self-check, verifies the pressure switch contacts PRS are open, and starts the inducer motor IDM.

   a. **Inducer Prepurge Period**- As the inducer motor IDM comes up to speed, the pressure switch contacts PRS close to begin a 15-second prepurge period.

   b. **Igniter Warm-Up**- At the end of the prepurge period, the Hot-Surface igniter HSI is energized for a 17-second igniter warm-up period.

   → c. **Trial-for-Ignition Sequence**- When the igniter warm-up period is completed, the main gas valve relay contacts GVR close to energize the gas valve GV, the gas valve opens, and 24 vac power is supplied for a field-installed humidifier at the HUM terminal. The gas valve GV permits gas flow to the burners where it is ignited by the HSI. Five seconds after the GVR closes, a 2-second flame proving period begins. The HSI igniter will remain energized until the flame is sensed or until the 2-second flame proving period begins.

   d. **Flame-Proving**- When the burner flame is proved at the flame-proving sensor electrode FSE, the furnace control CPU begins the blower-ON delay period and continues to hold the gas valve GV open. If the burner flame is not proved within two seconds, the control CPU will close the gas valve GV, and the control CPU will repeat the ignition sequence for up to three more Trials-For-Ignition before going to Ignition-Lockout. **Lockout will be reset** automatically after three hours or by momentarily interrupting 115 vac power to the furnace, or by interrupting 24 vac power at SEC1 or SEC2 to the furnace control CPU (not at W, G, R, etc.).
   If flame is proved when flame should not be present, the furnace control CPU will lock out of Gas-Heating mode and operate the inducer motor IDM until flame is no longer proved.

   e. **Blower-On Delay**- If the burner flame is proven, the blower motor is energized on HEAT speed 25 seconds after the gas valve GV is energized.
   Simultaneously, the electronic air cleaner terminal EAC-1 is energized and remains energized as long as the blower motor BLWM is energized.

   f. **Blower-Off Delay**- When the thermostat is satisfied, the R-to-W circuit is opened, de-energizing the gas valve GV, stopping gas flow to the burners, and de-energizing the humidifier terminal HUM. The inducer motor IDM will remain energized for a 5-second post-purge period. The blower motor BLWM and air cleaner terminal EAC-1 will remain energized for 90, 120, 150, or 180 seconds (depending on the blower-OFF delay selection). The furnace control CPU is factory-set for a 120-second blower-OFF delay.

2. **Cooling Mode**
   The thermostat "calls for cooling."

   a. **Single-Speed Cooling**
   (See Fig. 25, 26, 28, and 30 for thermostat connections)

   The thermostat closes the R-to-G-and-Y circuits. The R-to-Y circuit starts the outdoor unit, and the R-to-G-and-Y/Y2 circuits start the furnace blower motor BLWM on COOL speed.
   The electronic air cleaner terminal EAC-1 is energized with 115 vac when the blower motor BLWM is operating.
   When the thermostat is satisfied, the R-to-G-and-Y circuits are opened. The outdoor unit will stop, and the furnace blower motor BLWM will continue operating on the COOL speed for an additional 90 seconds. Jumper Y/Y2 to DHUM to reduce the cooling off-delay to 5 seconds. (See Fig. 24.)

   b. **Two-Speed Cooling**
   (See Fig. 27, 29, 31, and 32 for thermostat connections.)

   The thermostat closes the R-to-G-and-Y1 circuits for low-cooling or closes the R-to-G-and-Y1-and-Y2 circuits for high-cooling. The R-to-Y1 circuit starts the outdoor unit on low-cooling speed, and the R-to-G-and-Y1 circuit starts the furnace blower motor BLWM on low-cool speed (same speed as FAN). The R-to-Y1-and-Y2 circuits start the outdoor unit on high-cooling speed, and the R-to-G-and-Y/Y2 circuits start the furnace blower motor BLWM on COOL speed.
   The electronic air cleaner terminal EAC-1 is energized with 115 vac whenever the blower motor BLWM is operating.
   When the thermostat is satisfied, the R-to-G-and-Y1 or R-to-G-and-Y1 and Y2 circuits are opened. The outdoor unit stops, and the furnace blower BLWM and electronic air cleaner terminal EAC-1 will remain energized for an additional 90 seconds. Jumper Y1 to DHUM to reduce the cooling off-delay to 5 seconds. (See Fig. 24.)

3. **Thermidistat Mode**
   (See Fig. 26-29 for Thermidistat connections.)
   The dehumidification output, DHUM on the Thermidistat should be connected to the furnace control thermostat terminal DHUM. When there is a dehumidify demand, the DHUM input is activated, which means 24 vac signal is removed from the DHUM input terminal. In other words, the DHUM input logic is reversed. The DHUM input is turned ON when no dehumidify demand exists. Once 24 vac is detected by the furnace control on the DHUM input, the furnace control operates in Thermidistat mode. If the DHUM input is low for more than 48 hours, the furnace control reverts back to non-Thermidistat mode.
   The cooling operation described in item 2. above also applies to operation with a Thermidistat. The exceptions are listed below:

   a. When the R-to-G-and-Y1 circuit is closed and there is a demand for dehumidification, the furnace blower motor BLWM will continue running at low-cool speed (same speed as FAN).

   b. When the R-to-G-and-Y/Y2 circuit is closed and there is a demand for dehumidification, the furnace blower motor BLWM will drop the blower speed from COOL to HEAT for a maximum of 10 minutes before reverting back to COOL speed. If there is still a demand for dehumidification

after 20 minutes, the furnace control CPU will drop the blower speed back to HEAT speed. This alternating 10-minute cycle will continue as long as there is a call for cooling.

c. When the ″call for cooling″ is satisfied and there is a demand for dehumidification, the cooling blower-off delay is decreased from 90 seconds to 5 seconds.

4. **Continuous Blower Mode**

When the R-to-G circuit is closed by the thermostat, the blower motor BLWM will operate on continuous-blower speed (can be adjusted to FAN, HEAT, or COOL speed) at the thermostat. Factory default is FAN speed. Terminal EAC-1 is energized as long as the blower motor BLWM is energized.

During a call for heat, the blower BLWM will stop during igniter warm-up (17 seconds), ignition (7 seconds), and blower-ON delay (25 seconds), allowing the furnace heat exchangers to heat up more quickly, then restarts at the end of the blower-ON delay period at HEAT speed.

In heating, the furnace control CPU will hold the blower motor BLWM at HEAT speed during the selected blower-OFF delay period before reverting to continuous-blower speed.

When the thermostat ″calls for low-cooling,″ the blower motor BLWM will switch to operate at low-cool speed (same speed as FAN). When the thermostat is satisfied, the blower motor BLWM will operate an additional 90 seconds on low-cool speed (same speed as FAN) before reverting back to continuous-blower speed.

When the thermostat ″calls for high-cooling″, the blower motor BLWM will operate at COOL speed. When the thermostat is satisfied, the blower motor BLWM will operate an additional 90 seconds on COOL speed before reverting back to continuous-blower speed.

When the R-to-G circuit is opened, the blower motor BLWM will continue operating for an additional 5 seconds, if no other function requires blower motor BLWM operation.

**Continuous Blower Speed Selection from Thermostat** -To select different continuous-blower speeds from the room thermostat, momentarily turn off the FAN switch or push-button on the room thermostat for 1-3 seconds after the blower motor BLWM is operating. The furnace control CPU will shift the continuous-blower speed from the factory setting of FAN to HEAT speed. Momentarily turning off the FAN switch again at the thermostat will shift the continuous-blower speed from HEAT to COOL. Repeating the procedure will shift the continuous-blower speed from COOL to FAN speed. The selection can be changed as many times as desired and is stored in the memory to be automatically used following a power interruption.

5. **Heat pump**

(See Fig. 28-31 for thermostat connections.)

When installed with a heat pump, the furnace control automatically changes the timing sequence to avoid long blower off times during demand defrost cycles. When the R-to-W-and-Y1 or R-to-W-and-Y1-and-G circuits are energized the furnace control CPU will switch to or turn on the blower motor BLWM at HEAT speed, and begin a heating cycle. The blower motor BLWM will remain on until the end of the prepurge period, then shut off for 24 seconds then come back on at HEAT speed. When the W input signal disappears, the furnace control begins a normal inducer post-purge period and the blower remains running at HEAT speed for the selected blower-OFF delay period then switches to low-cool speed (same speed as FAN). If the R-to-W-and-Y1-and-G signals disappear at the same time, the blower motor BLWM will remain on for the selected blower-OFF delay period. If the R-to-W-and-Y1 signals disappear, leaving the G signal, the blower motor BLWM will remain on for the selected blower-OFF delay period then switch to continuous-blower speed.

When the R-to-W-and-Y/Y2, R-to-W-and-Y/Y2-and-G, R-to-W-and-Y1-and-Y/Y2, or R-to-W-and-Y1-and-Y/Y2-and-G circuits are energized the furnace control CPU will switch to or turn on the blower motor BLWM at HEAT speed, and begin a heating cycle. The blower motor BLWM will remain on until the end of the prepurge period, then shut off for 24 seconds then come back on at HEAT speed. When the W input signal disappears, the furnace control begins a normal inducer post-purge period and the blower switches to COOL speed after a 3 second delay. If the R-to-W-and-Y/Y2-and-G or R-to-W-and-Y1-and-Y/Y2-and-G signals disappear at the same time, the blower motor BLWM will remain on for the selected blower-OFF delay period. If the R-to-W-and-Y/Y2 or R-to-W-and-Y1-and-Y/Y2 signals disappear, leaving the G signal, the blower motor BLWM will remain on for the selected blower-OFF delay period then switch to continuous-blower speed.

### Step 4—Wiring Diagrams

Refer to Fig. 56 for wiring diagram.

### Step 5—Troubleshooting

Refer to the service label. (See Fig. 55—Service Label.)

The Troubleshooting Guide can be a useful tool in isolating furnace operation problems. Beginning with the word “Start,” answer each question and follow the appropriate arrow to the next item.

The Guide will help to identify the problem or failed component. After replacing any component, verify correct operation sequence.

## Fig. 60—Troubleshooting Guide

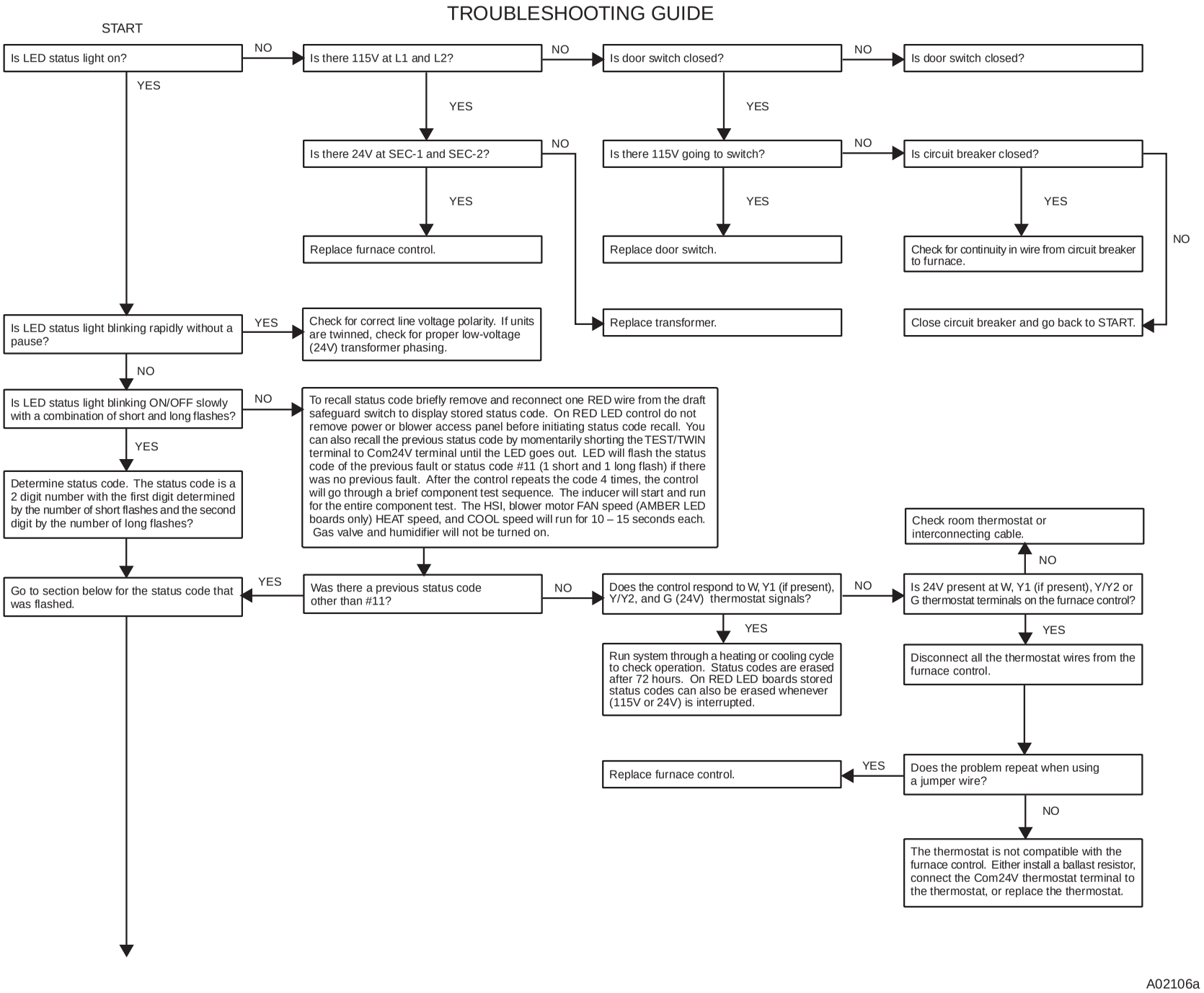

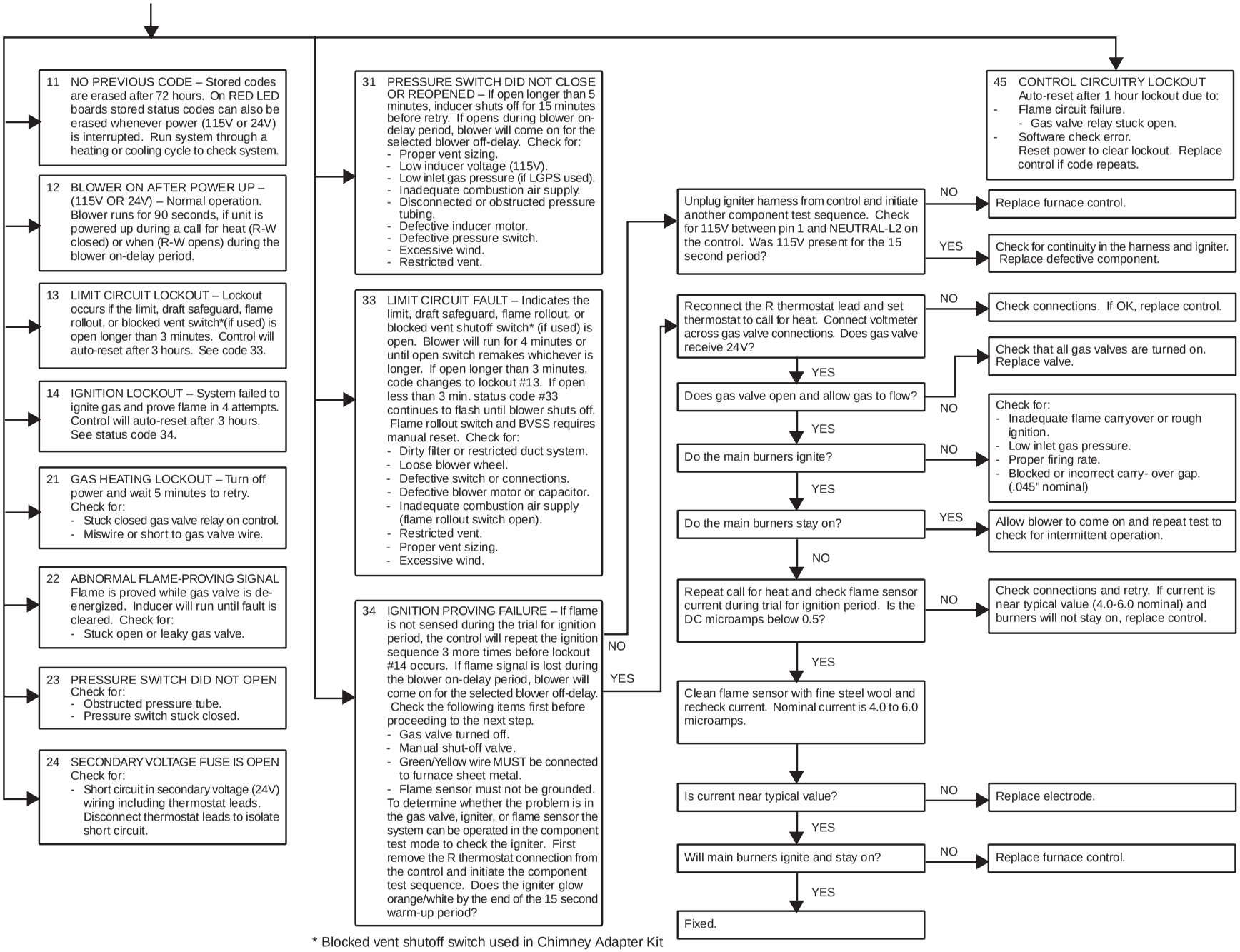


* Blocked vent shutoff switch used in Chimney Adapter Kit

A05032

Copyright 2005 Carrier Corporation


**Manufacturer reserves the right to discontinue, or change at any time, specifications or designs without notice and without incurring obligations.**