337533−751−CBP
thru
337533−755−CBP

COUPLING BOX KIT
FOR 35−IN (889 MM) HIGH EFFICIENCY
CONDENSING GAS FURNACES

Installation Instructions

NOTE: Read the entire instruction manual before starting the installation.

SAFETY CONSIDERATIONS

Improper installation, adjustment, alteration, service, maintenance, or use can cause explosion, fire, electrical shock, or other conditions which may cause death, personal injury, or property damage. Consult a qualified installer, service agency, or your distributor or branch for information or assistance. The qualified installer or agency must use factory-authorized kits or accessories when modifying this product. Refer to the individual instructions packaged with the kits or accessories when installing.

Follow all safety codes. Wear safety glasses, protective clothing, and work gloves. Have a fire extinguisher available. Read these instructions thoroughly and follow all warnings or cautions include in literature and attached to the unit. Consult local building codes, the current editions of the National Fuel Gas Code (NFGC) NFPA 54/ANSI Z223.1 and the National Electrical Code (NEC) NFPA 70.

In Canada, refer to the current editions of the National Standards of Canada CAN/CSA-B149.1 and .2 Natural Gas and Propane Installation Codes, and Canadian Electrical Code CSA C22.1.

Recognize safety information. This is the safety-alert symbol ⚠. When you see this symbol on the unit and in instructions or manuals, be alert to the potential for personal injury.

Understand the signal words **DANGER**, **WARNING**, and **CAUTION**. These words are used with the safety-alert symbol. **DANGER** identifies the most serious hazards which **will** result in severe personal injury or death. **WARNING** signifies hazards which **could** result in personal injury or death. **CAUTION** is used to identify unsafe practices which **may** result in minor personal injury or product and property damage. **NOTE** is used to highlight suggestions which **will** result in enhanced installation, reliability, or operation.

⚠ WARNING

FIRE, EXPLOSION, ELECTRICAL SHOCK HAZARD

Failure to follow this warning could result in personal injury, death and/or property damage.

The ability to properly perform maintenance on this equipment requires certain knowledge, mechanical skills, tools, and equipment. If you do not possess these, do not attempt to perform any maintenance on this equipment other than those procedures recommended in the Home Owner's Information Manual.

⚠ WARNING

FIRE, EXPLOSION, ELECTRICAL SHOCK AND CARBON MONOXIDE POISONING HAZARD

Failure to follow this warning could result in personal injury, death and/or property damage.

Improper installation, adjustment, alteration, service, maintenance, or use can cause carbon monoxide poisoning, explosion, fire, electrical shock, or other conditions which could result in personal injury or death. Consult your distributor or branch for information or assistance. The qualified installer or agency must use only factory-authorized kits or accessories when servicing this product.

⚠ WARNING

ELECTRICAL SHOCK, FIRE OR EXPLOSION HAZARD

Failure to follow this warning could result in personal injury or death, or property damage.

Before installing, modifying, or servicing system, main electrical disconnect switch must be in the OFF position and install a lockout tag. There may be more than one electrical supply to the furnace. Check accessories and cooling unit for additional electrical supplies that must be shut off during furnace servicing. Lock out and tag switch with a suitable warning label. Verify proper operation after servicing.

⚠ CAUTION

CUT HAZARD

Failure to follow this caution may result in personal injury.

Sheet metal parts may have sharp edges or burrs. Use care and wear appropriate protective clothing, safety glasses and gloves when handling parts, and servicing furnaces.

INTRODUCTION

This instruction covers installation of the Coupling Box Kit, Part No. 337533-751-CBP, 337533-752-CBP, 337533-753-CBP, and 337533-754-CBP,

There are two different RTV sealants used on this assembly and are needed before starting the assembly.

The low adhesion sealant used on the Coupling Box cover is Novaguard RTV 400-900™.

The high adhesion sealant is Novaguard 400-303-RTV™, G.E. 162™, G.E. 6702™, or Dow-Corning 738™. DO NOT substitute any other type of RTV sealant. G.E. 162 (P771-9003) is available through Replacement Components Division (RCD).

DESCRIPTION AND USAGE

Use this coupling box kit to replace a failed coupling box assembly. This Coupling Box Kit contains the following items.

See Table 1 for Kit Contents and Table 2 for Kit Numbers.

Table 1 – Kit Contents

DESCRIPTION	QUANTITY
Coupling Box	1
HEX Head Screw 8A 1/2	16 Max
Instructions	1

Table 2 – Kit Numbers

INPUT BTUH	KIT NUMBER	CASING WIDTH – IN (MM)
40,000	337533–751–CBP	14 3/16 (360)
60,000	337533–751–CBP	14 3/16 (360)
60,000	337533–752–CBP	17 1/2 (445)
60,600	337533–755–CBP	21 (533)
80,000	337533–752–CBP	17 1/2 (445)
80,000	337533–752–CBP	21 (533)
100,000	337533–753–CBP	21 (533)
120,000	337533–754–CBP	24 1/2 (622)
140,000	337533–754–CBP	24 1/2 (622)

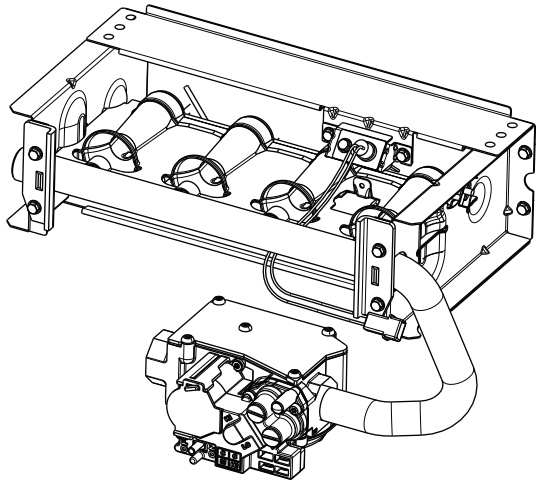

Fig. 1 - Burner Assembly / Manifold Assembly / Gas Valve

INSTALLATION

Unit Shut Down

⚠ WARNING

ELECTRICAL SHOCK AND FIRE HAZARD

Failure to follow this warning could result in personal injury, death, and/or property damage.

Turn off the gas and electrical supplies to the furnace and install lockout tag before performing any maintenance or service. Follow the operating instructions on the label attached to the furnace.

1. Set room thermostat to lowest setting or “OFF.”
2. Disconnect power at external disconnect, fuse or circuit breaker.
3. Turn off gas at external shut-off or gas meter.
4. Remove outer doors and set aside.
5. Turn electric switch on gas valve to “OFF.”

Vent Pipe Removal

NOTE: The vent pipe may be connected to the furnace at the rubber vent pipe support. Before cutting the vent pipe, loosen the clamps around the vent pipe coupling and move the vent pipe away from the furnace. Support the vent pipe as close to the furnace as possible to prevent damage to the vent system

NOTE: If the vent pipe passes through the vent pipe coupling into the vent elbow on the inducer, it may be necessary to cut the vent pipe external to the casing, then re-cement the vent pipe with a field-supplied coupling .

1. Support the vent pipe as close to the furnace as possible to prevent damage to the vent system.
2. Cut vent pipe with a hacksaw and move the remaining vent pipe out of the way. Secure the **remaining** vent pipe if necessary.
3. Loosen both clamps at the vent pipe support attached to furnace casing.
4. Loosen clamp for the vent pipe at vent elbow on the inducer assembly.
5. Remove remaining vent pipe through the top of the furnace casing and set aside.

⚠ WARNING

CARBON MONOXIDE POISONING HAZARD

Failure to follow this warning could result in personal injury or death.

To route the vent pipe and combustion air pipe through the furnace, the manufacturer supplied kit must be used. Failure to properly seal the blower compartment from the furnace vestibule could result in the circulation of carbon monoxide throughout the structure. The vent pipe and combustion air pipe must be a continuous pipe while passing through the blower compartment. Seals supplied in this kit must be installed per the instructions provided. Follow all procedures outline in these instructions.

Manifold Removal/Burner Box Removal

NOTE: Use a back-up wrench on the gas valve to prevent the valve from rotating on the manifold or damaging the mounting to the burner box. See Fig. 1.

1. Disconnect the gas pipe from gas valve and remove pipe from the furnace casing.
2. Disconnect the connector harness from gas valve (Modulating only) or remove individual wires from terminals on gas valve (All other models).
3. Disconnect the wires from gas valve, flame sensor and hot surface igniter
4. Remove wires from both rollout switches.
5. Support the manifold and remove the 4 screws that secure the manifold assembly to the burner box and set aside. Note the location of the green and yellow ground wire for reassembly later.
6. Support the burner box assembly and remove the screws that attach the burner box to the heat exchanger cell panel.
7. Set the burner box assembly aside.

Pressure Switch Removal

NOTE: There are two types of pressure switches. The modulating pressure switch assembly has three pressure switches. Two are side-by-side with the third switch mounted to the back of one of the switches.

All other furnaces have two pressure switches mounted back-to-back. The tube for the front pressure switch connects the switch to the port on the collector box. The tube for the switch

mounted on the back connects the switch to the port on the inducer assembly.

1. Remove the front pressure switch tube from the port on the collector box.
2. Disconnect the pressure switch harness (modulating only) from the main wiring harness or remove the individual wires from the front pressure switch (non-modulating). Note the location of the wires for reassembly.
3. Remove the screws that attach the pressure switch assembly to the inducer.
4. Remove the back pressure switch tube that connects to the inducer assembly.

⚠ CAUTION

UNIT OPERATION HAZARD

Failure to follow this caution may result in unit damage or improper operation.

Label all wires prior to disconnection when servicing controls.

⚠ PRUDENCE

D'EQUIPEMENT D'OPERATION

Toute erreur de câblage peut être une source de danger et de panne.

Lors des opérations d'entretien des commandes, étiqueter tous les fils avant de les déconnecter.

5. Remove the wires from the back pressure switch. Note the location of the wires for reassembly.
6. Set the pressure switches aside.

Inducer Assembly Removal

1. Remove the door bracket from the front edge of the blower shelf.
2. Remove the wires that connect the main wiring harness to the inducer motor harness.
3. Remove the screws from the tabs on inducer assembly that secures the inducer to the collector box. Note there is one mounting tab directly under the vent elbow.
4. Remove the inducer assembly and set aside.
5. To avoid double gasketing and leakage, check to make sure the drain gaskets for the inducer and the inducer gasket are not still attached to the collector box.
6. Remove any remaining gaskets from the collector box and discard.

Condensate Drain and Trap Removal

1. Disconnect external drain from condensate drain elbow or drain extension pipe inside the furnace and set aside.
2. Disconnect the Condensate Trap relief hose from collector box port and the molded retainer clips on the inducer housing.

NOTE: If Condensate Trap has a heat pad attached to the trap, trace the wires for the pad back to the connection point and disconnect the wires for the heat pad.

3. Remove the screw that secures the condensate trap to the Collector Box, remove the trap and set aside.
4. Remove the trap gasket from the Collector Box if it did not come off when the trap was removed.
5. Discard the old trap gasket.
6. Rinse condensate trap in warm water until trap is clean.
7. Clean relief port on Condensate Trap with a thin wire or paper clip, rinse with warm water and set aside.
8. Flush condensate lines with warm water.
9. Shake trap dry.

Remove J-box & Main Harness

1. Remove the screw that secures the J-box cover to the J-box bracket
2. Disconnect the field wiring from the factory wiring and remove the ground wire from the green ground screw on the J-box bracket.
3. Remove factory wiring from the J-box.
4. Disconnect the factory wires from the main limit switch.
5. Remove the screw that secures **both** the door switch to the blower shelf and the blower shelf door bracket. Remove remaining screws from the blower shelf door bracket, and set blower shelf door bracket aside.
6. Remove main harness from the slot in the blower shelf.

Collector Box Removal

1. Remove the screws that secure the collector box to the heat exchanger cell panel and set aside. See Fig. 2.
2. Remove collector box gasket. Verify old collector box is reusable or obtain new from distributor (preferred). See Fig. 3.
3. Flush out the Collector Box with warm water including the tube ports. Clean tube ports on Collector Box with a thin wire or paper clip, rinse with warm water and set aside.

Heat Exchanger Assembly Removal

⚠ CAUTION

CUT HAZARD

Failure to follow this caution may result in personal injury.

Sheet metal parts may have sharp edges or burrs. Use care and wear appropriate protective clothing, safety glasses and gloves when handling parts, and servicing furnaces.

1. Remove the screws that attach the filler plate to the bottom edge of the condensing heat exchanger assembly and casing.
2. Remove screws that secure the heat exchanger assembly to the furnace casing.
3. Pull assembly out of casing.
4. Pull the assembly forward until the back edge of the heat exchanger assembly is resting on the front edge of the blower shelf.
5. Lift the heat exchanger assembly out of the casing and set aside.

Remove Coupling Box and Finger Baffle

1. Remove the screws that secure the finger baffle from the Coupling Box Cover. See Fig. 4.
2. Remove the screws that secure the Coupling Box Cover to the rear of the Heat Exchanger Assembly.
3. Use a putty knife or gasket scraper to get between the coupling box cover and the Primary Cell Outlet panel to break the silicone seal between the parts.
4. Pry upwards with the putty knife as you move around the Coupling Box cover. Be careful not to damage containment plate.
5. Once the Coupling Box cover is sufficiently loosened, remove the coupling box cover from the rear of the Heat Exchanger Assembly. See Fig. 7.

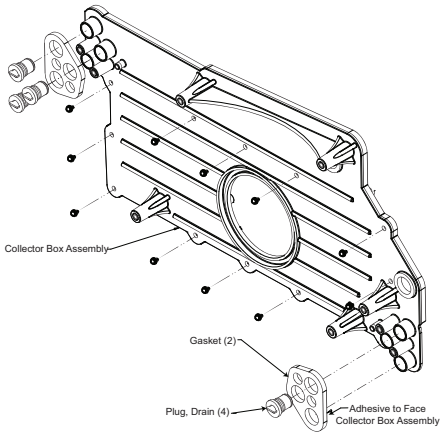

A11412

Fig. 2 - Collector Box Removal / Installation

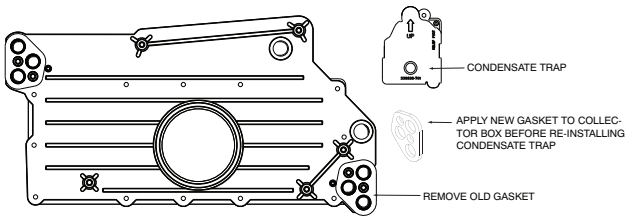

A11442

Fig. 3 - Collector Box Gasket Condensate Trap

HEAT EXCHANGER ASSY.
INSULATION
CELL PANEL
FOIL SIDE
SWITCH, LIMIT
GASKET (MAIN LIMIT)
BAFFLE
(FINGER)
See Detail G
HEAT EXCHANGER
PANEL ASSY.
PLATE, CONTAINMENT
HEAT EXCHANGER
COUPLING **BOX COVER**

SLOT OF FINGER BAFFLE
TO BE CENTERED ON
HEAT EXCHANGER

DETAIL G

HEAT EXCHANGER
ATTACHMENT
PLATE
INSULATION
FRONT PANEL

DETAIL F

A11413

Fig. 4 - Cell panel Removal / Installation

Install Coupling Box Cover/Finger Baffles

NOTE: Both the primary heat exchanger outlet panel and secondary heat exchanger panel surfaces must be clean and dry. All loose or residual sealant must be removed from the mating surfaces.

1. Apply a 1/4-in. (6 mm) bead of low adhesion silicone (white) to the inside edge of the coupling box cover. See Fig. 5.
2. Align the Coupling Box Cover over the rear of the Heat Exchanger Assembly. See Fig. 4 and 7.
3. Install the screws that secure the bottom edge and sides of the Coupling Box to the Heat Exchanger Assembly
4. Align the Finger Baffles along the top edge of the Coupling Box Cover. See Fig. 4 and 7.
5. Install the screws for the Finger Baffles and the remaining screws for the top edge of the Coupling Box Cover.

Heat Exchanger Assembly Installation

1. Lift the heat exchanger assembly and set the rear of the assembly on the blower deck.
2. Slide the heat exchanger onto the support rails in the furnace casing
3. Raise the rear of the heat exchanger and set the bottom of the sidewall baffles on top of the support rails in the blower deck.
4. Lift the heat exchanger slightly and slide the heat exchanger assembly into the casing, making sure the bottom edge of the sidewall baffle slides into the engagement tab on the support rails
5. Continue to slide the heat exchanger assembly backward into the casing until the primary cell panel is flush with the mounting brackets on the side of the casing.
6. Align the primary cell panel with the mounting brackets.
7. Insert the screws that attach the primary cell panel to mounting brackets on the casing.
8. Align the filler plate to the bottom edge of the condensing heat exchanger assembly.
9. Secure the filler plate to the condensing heat exchanger and casing.

Collector Box Installation

1. Verify old collector box gasket is reusable or obtain new from distributor (preferred).
2. Verify old trap gasket is reusable or obtain new from distributor (preferred).

NOTE: There is a slot on each side of the front panel of the condensing heat exchanger. The collector box has alignment tabs on the back that fit into the slots on the condensing heat exchanger panel.

3. Align the tabs on the collector box to the slots condensing heat exchanger.
4. With the collector box fully seated against the condensing heat exchanger cell panel, install the screws through the collector box.
5. Tighten the screws in an alternating pattern around the collector box. **Do not over-tighten.**

Inducer Assembly Installation

1. Verify any remaining gaskets on the collector box are removed and discarded.
2. Verify the inducer assembly has gaskets on the drain stubs and at the inducer inlet.
3. Verify the Inlet Choke Plate (when used) is installed on the inlet opening of the inducer.
4. Align the tabs on inducer assembly to the brass inserts on the collector box.
5. Insert the mounting screws by hand through the tabs to secure the inducer to the collector box. Remember there is a mounting tab located under the vent elbow.
6. Tighten the screws in an alternating pattern by hand. Do not use a screw gun or over-tighten the mounting screws.
7. Connect the inducer leads from the main wiring harness to the inducer motor harness.
8. Route condensate trap relief tube through standoffs on inducer housing and connect to the port on the collector box.

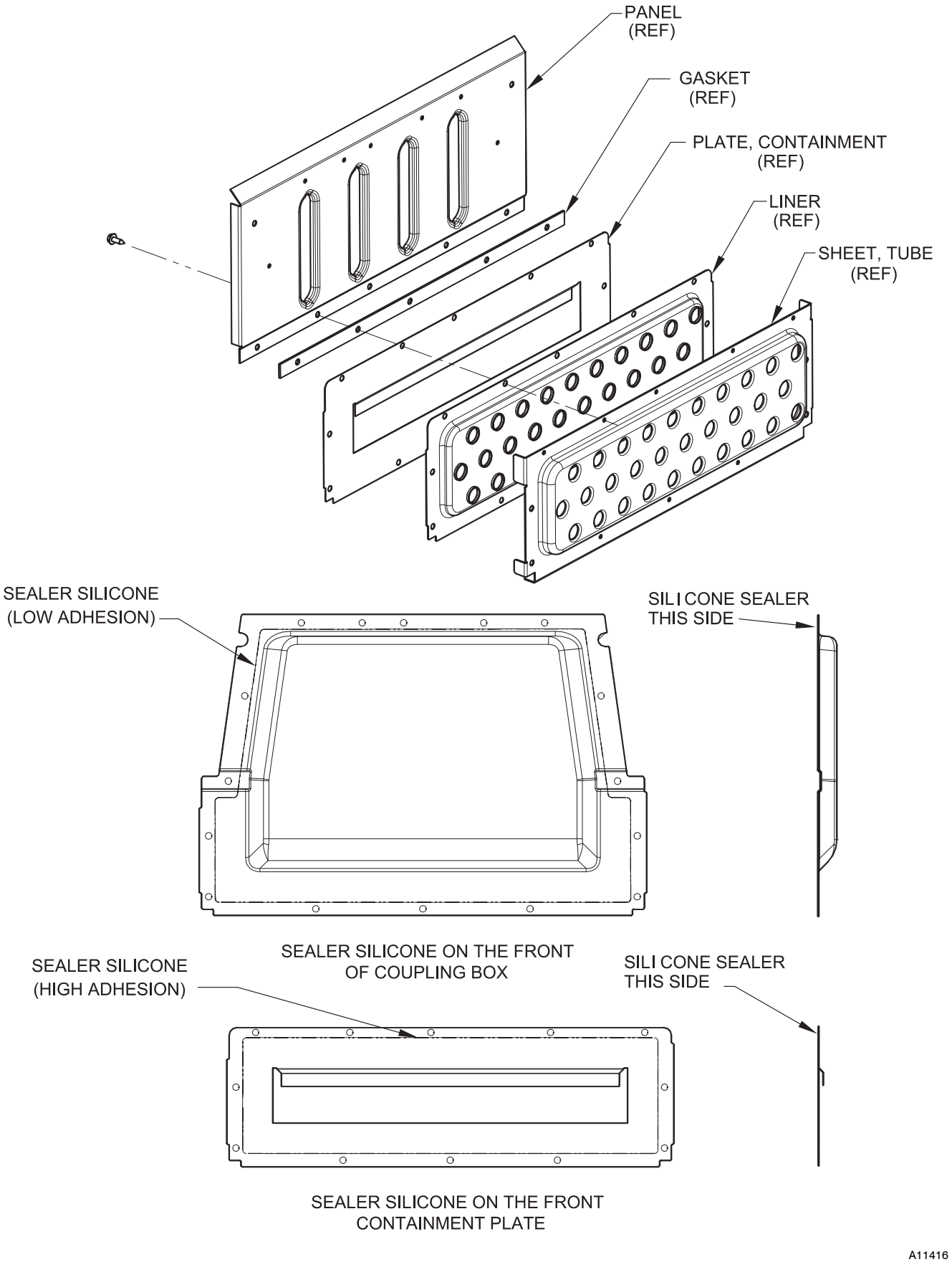

Fig. 5 - Containment Plate and Collector Box Sealant Application

Install J-box & Main Harness

1. Insert grommet for main harness in the slot in the blower shelf.
2. Align the door switch to the blower shelf.
3. Install screw that secures both the door switch bracket and blower shelf door bracket to blower shelf. Install remaining blower shelf door bracket screws.
4. Connect the field wiring from the factory wiring and attach the ground wire to the green ground screw on the J-box bracket.
5. Attach the J-box cover to the J-box bracket
6. Install the screw to secure the J-box cover to the bracket.
7. Connect the factory wires to the main limit switch.

Pressure Switch Installation

NOTE: There are two types of pressure switches. The modulating pressure switch assembly has three pressure switches. Two are side-by-side with the third switch mounted to the back of one of the switches.

All other furnaces have two pressure switches mounted back-to-back.

The tube for the front pressure switch connects the switch to the port on the collector box. The tube for the switch mounted on the back connects the switch to the port on the inducer assembly. Refer to furnace installation instructions and labels for wiring and tubing diagrams.

1. Connect the wires to the back pressure switch.
2. Connect the tube for the back pressure switch to the inducer assembly.
3. Connect the tube for the front pressure switch to the port on the collector box.
4. Attach the pressure switch assembly to the inducer.
5. Connect the pressure switch harness (modulating only) to the main wiring harness or attach the individual wires to the pressure switch (non-modulating).
6. If necessary, route the pressure switch tubing for the front pressure switch through the stand-off on the inducer assembly.
7. If necessary, route the condensate trap relief tubing through the stand-off on the inducer assembly. Reconnect tubing to the ports on the condensate trap and collector box.

Install the Condensate Trap and Drain

1. Align the trap with the drain outlet on the collector box. See Fig. 6.
2. Secure the trap to the collector box with the screw.
3. Connect the condensate trap relief tube from collector box port and insert the tube into the molded retainer clips on the inducer housing.
4. Insert the condensate drain elbow through the casing until it is properly seated. Or, connect the drain elbow to the drain extension pipe and route the pipe behind the inducer.
5. Connect the drain elbow to the condensate trap.

NOTE: If condensate has a heat pad attached to the trap, trace the wires for the pad back to the connection point and connect the wires for the heat pad.

Burner Box/Manifold Installation

1. Support the burner box assembly and install the screws that attach the burner box to the heat exchanger cell panel.
2. Align the orifices in the manifold assembly with the support rings on the end of the burner.
3. Insert the orifices in the support rings of the burners. Manifold mounting tabs should fit flush against the burner box

NOTE: If manifold does not fit flush against the burner box, the burners are not fully seated forward. Remove the manifold and check burner positioning in the burner box assembly.

4. Attach the green/yellow wire and ground terminal to one of the manifold mounting screws.
5. Install the remaining manifold mounting screws.
6. Connect the wires to both rollout switches.
7. Connect the wires to the flame sensor and hot surface igniter.
8. Connect the connector harness from gas valve (Modulating only) or attach the individual wires to the terminals on gas valve (All other models).

NOTE: Note: Use only propane-resistant pipe dope. Do not use Teflon tape.

9. Insert the gas pipe through the grommet in the casing. Apply a thin layer of pipe dope to the threads of the pipe and thread the pipe by into the gas valve.

NOTE: Note: Use a back-up wrench on the gas valve to prevent the valve from rotating on the manifold or damaging the mounting to the burner box.

10. With a back-up wrench on the inlet boss of the gas valve, finish tightening the gas pipe to the gas valve.
11. Turn gas on at electric switch on gas valve.
12. Turn power on at external disconnect, fuse or circuit breaker.

Vent Pipe Installation

1. Insert the vent pipe through the top of the furnace casing and insert into the outlet of the inducer vent elbow.
2. Tighten the clamp for the vent pipe at vent elbow on the inducer assembly 15 lb-in.
3. Align the remaining vent pipe system to the vent pipe in the furnace casing.
4. Solvent cement the pipes as required for the type of material used or attach the plastic vent pipe adapter to the top plate of the furnace.
5. Ensure that the vent pipe is inserted into the vent pipe adapter and tighten both clamps at the vent pipe support attached to furnace casing 15 lb-in..

Unit Checkout

⚠ WARNING

FIRE OR EXPLOSION HAZARD

Failure to follow this warning could result in personal injury, death, and/or property damage.

Never purge a gas line into a combustion chamber. Never test for gas leaks with an open flame. Use a commercially available soap solution made specifically for the detection of leaks to check all connections. A fire or explosion may result causing property damage, personal injury or loss of life.

⚠ WARNING

RISQUE D'EXPLOSION ET D'INCENDIE

Le non-respect des avertissements de sécurité pourrait d'entraîner des blessures graves, la mort ou des dommages matériels.

Ne jamais utiliser une flamme nue por vérifier la présence des fuites de gaz. Pour la vérification de tous les joints, utiliser plutôt une solution savonneuse commerciale fabriquée spécifiquement pur la détection des fuites de gaz. Un incendie ou une explosion peut entraîner des dommages matériels, des blessures ou la mort.

1. Set thermostat to "OFF".
2. Turn on power at external disconnect, fuse or circuit breaker.
3. Turn on gas at external shut-off or gas meter.
4. Check for gas leaks with a commercially available soap solution made specifically for the detection of leaks to check all connections.
5. Manually close blower door switch.
6. Initiate component test through circuit board by referring to **"Component Test"** on status code label on blower access door for complete test sequence information.
7. If any status codes are flashed, refer to status code label on unit blower door.
8. Turn thermostat fan switch to "ON", "Continuous" or jumper R to G terminals at furnace control board.
9. Check for air leakage around cell panel. It may be necessary to remove heat exchanger assembly and top gasket between cell panel and furnace casing top plate. Re-install and re-check for blower air leaks.
10. Remove jumper(s) or set thermostat fan to "Auto" or "OFF"
11. Release blower door switch
12. Install blower access door
13. Set thermostat to call for heat.
14. Allow unit to initiate a complete call for heat cycle.
15. Check for air leakage around collector box. A whistling noise may indicate air leak in collector box seal.

NOTE: If there is a severe air leak in the collector box seal, pressure switch may not close or will re-open, resulting in no ignition or erratic burner operation.

NOTE: Cell Panel corrosion and failure may have been caused by one or more of the following conditions. As part of the system check-out, verify that the following conditions are not affecting the operation of the furnace:

- Short Cycling-Defective thermostat: Incorrect thermostat anticipator setting, dirty filter or over-sized furnace.
- Under firing/low btu input: Set manifold pressure and verify firing rate as shown on rating plate by clocking the gas meter.
- Overfiring/high btu input: Set manifold pressure and verify firing rate as shown on rating plate by clocking the gas meter.
- Low temperature rise: Set unit for correct temperature rise range as shown on unit rating plate.
- Contaminated combustion air: Remove contaminates or provide ample fresh air for combustion.
- Excessive amounts of outside ventilation air: Return air temperature cannot be below 60 degrees F for extended periods of time.
- Incorrect venting or termination: Recirculation of products of combustion into the combustion air pipe can damage the furnace. Verify proper venting and vent termination per installation instructions. For additional information, and a complete sequence of furnace operation, refer to furnace Installation, Start-Up and Operating Instructions.

16. After System Check-out is complete, set thermostat below room temperature.
17. Verify that burner shuts down and blower completes selected off delay time.
18. Verify furnace operates properly and set thermostat to desired room temperature.
19. Re-install outer door.

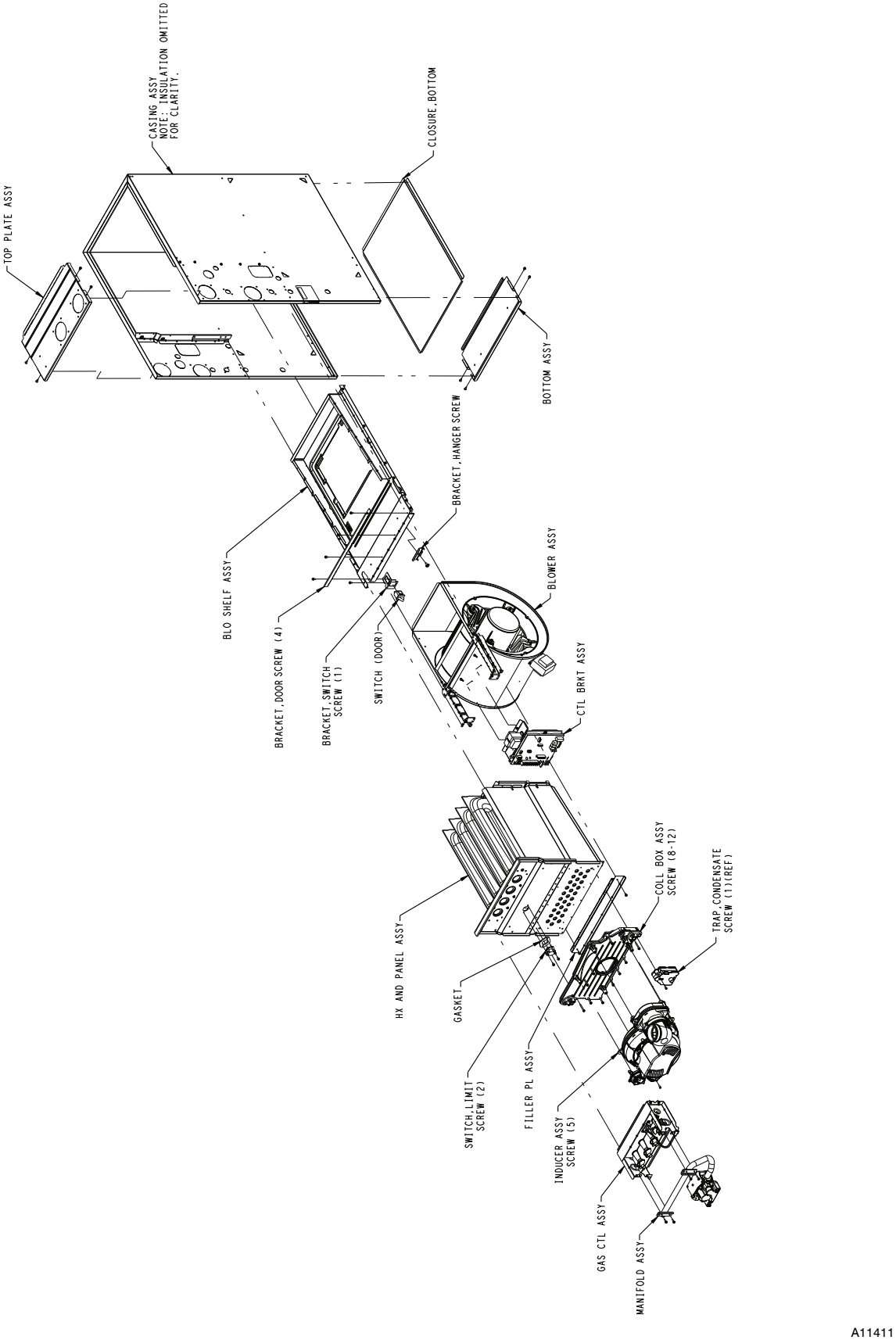

Fig. 6 - Final Assembly for Cell Panel and HX Assembly

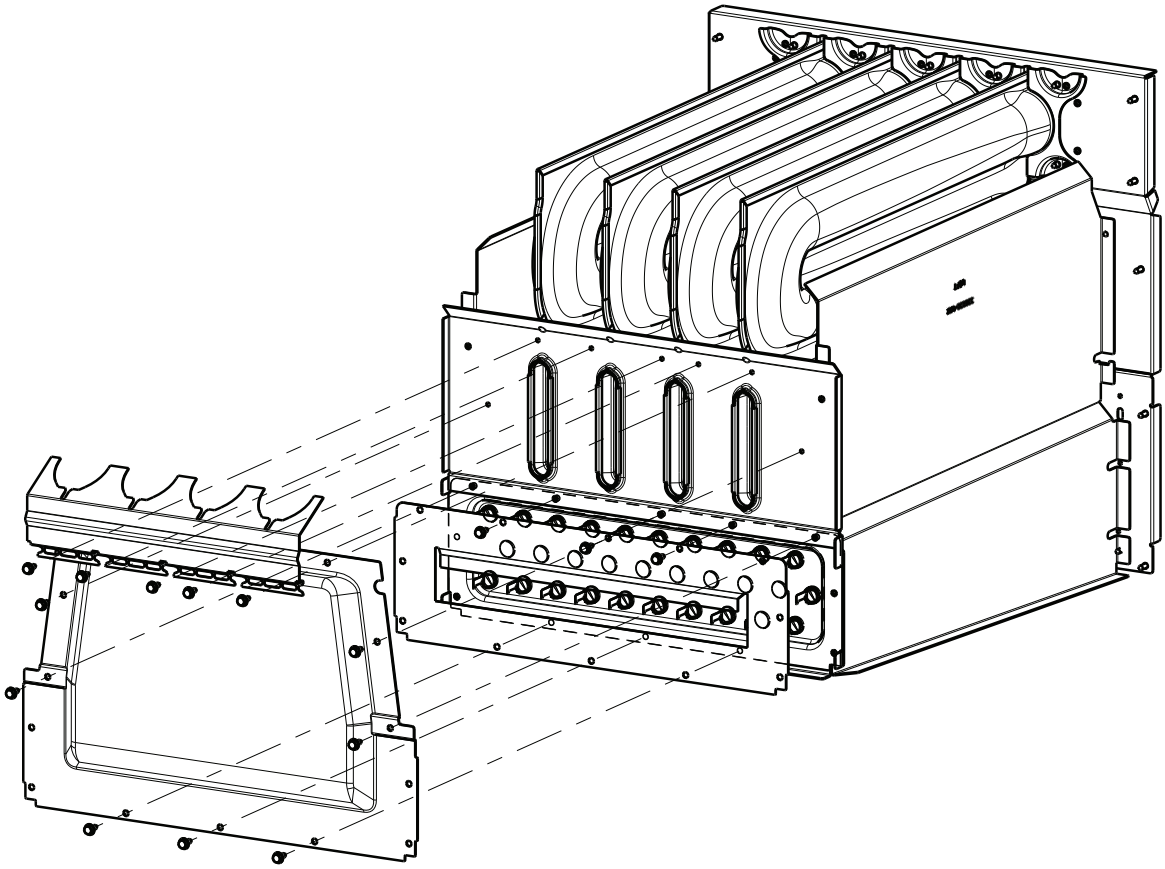

A11462

Fig. 7 - Coupling Box Cover and Finger Baffle Removal / Installation

Copyright 2012 CAC / BDP ● 7310 W. Morris St. ● Indianapolis, IN 46231 Printed in U.S.A. Edition Date: 01/12 **Catalog No: IIK–337533–02**

Manufacturer reserves the right to change, at any time, specifications and designs without notice and without obligations. Replaces: IIK–337533–01