Wired Remote Controller
7 Day Programmable Thermostat
Ductless Systems
KSACN0901AAA (High Wall)

Installation Instructions

Fig. 1 — Wired Controller

NOTES: Read the entire instruction manual before installing the wired controller.
Images are for illustration purposes only. Actual models may differ slightly.

TABLE OF CONTENTS

PAGE

SAFETY CONSIDERATIONS.....3
PREPARATION BEFORE INSTALLATION 5
WIRED CONTROLLER INSTALLATION PRECAUTION.....6
CONTROLLER DIMENSIONS 6
INSTALLATION 7
WIRING DIAGRAMS 10
TROUBLESHOOTING.....12
SPECIFICATION.....14
TECHNICAL INDICATIONS AND REQUIREMENT.....14
APPENDIX.....15

SAFETY CONSIDERATIONS

Read these instructions thoroughly and follow all warnings or cautions included in the literature and attached to the wired controller. Consult local building codes and National Electrical Code (NEC) for special requirements.

Recognize safety information. This is the safety-alert symbol ⚠. When you see this symbol on the wired controller and in instructions or manuals, be alert to the potential for personal injury. Understand these signal words: **DANGER**, **WARNING**, and **CAUTION**. These words are used with the safety-alert symbol.

DANGER identifies the most serious hazards which will result in severe personal injury or death. **WARNING** signifies hazards which could result in personal injury or death. **CAUTION** is used to identify unsafe practices which may result in minor personal injury or product and property damage. **NOTE** is used to highlight suggestions which will result in enhanced installation, reliability, or operation.

⚠ CAUTION

Failure to follow this warning could result in personal injury or death. Before beginning any modification or installation of this kit, ensure the main electrical disconnect is in the **OFF** position. Ensure power is disconnected to the fan coil unit. On some systems both the fan coil and the outdoor unit may be on the same disconnect. Tag the disconnect switch with a suitable warning label. There may be more than one to disconnect.

⚠ CAUTION

INSTALLATION

Only the distributor or authorized professionals should install the unit. Installation by unskilled persons may lead to improper installation, electric shock, or fire. Re-installation must be performed by authorized professionals. Non-compliance may lead to electric shock or fire.

NOTES: Save this manual for future reference.

- This manual provides a detailed description of the precautions that the user should be mindful of during operation. Keep this manual, after reading it, for future reference.
- To ensure correct service of the wired controller, read this manual carefully.

NOTES:

- Do not install the wired controller in a location vulnerable to flammable gas leaks. A fire may occur if there is a gas leak around the controller.
- Do not operate with wet hands or allow water to enter the wired controller, otherwise an electric shock may occur.
- The wiring should be a compatible connection cable for the current wired controller. Otherwise, electric leakage or heating may occur and result in a fire.
- Use the specified cables for wiring. Do not allow any external force to be applied to the connection wire terminals. Use this wiring to ensure there is no mechanical damage. Ensure the wire insulation is rated for the temperature it will sustain during operation. Failure to use this wire could result in a fire.

PREPARATION BEFORE INSTALLATION

1. Confirm the following required parts have been supplied.

Table 1 — Parts

NO.	NAME	QTY.	PART NUMBER	REMARKS
1.1	Wire controller	1	17317100A32244	
1.2	Installation and owner's manual	1		
1.3.1	Screws	3		M4*20 (for mounting on the wall)
1.3.2	Wall plugs	3		For mounting on the wall
1.3.3	Screws	2		M4*25 (for mounting on the switch box)
1.3.4	Plastic screw bars	2		For fixing on the switch box
1.4	Connection Extension Cable	1		19 feet (6 meters)
1.5	adapter wire	1		300mm part number 17401204000184
1.6	EMC Ferrite core (magnetic ring)	1		
2	Adapter board (multifunction board)	1	17122000A38610	
3	Harness line set 1# (7 wires)	1	17401204A02517	
4	Harness line set 2# (3 wires)	1	17401204A02754	

NOTES:
Extension wire available through RCD (Replacement Components)

- Part Number: 17401204000769.

2. Prepare the following assemblies on site.

Table 2 — Assemblies

No.	Name	QTY. (Embedded into Wall)
1	Switch box	1
2	Wiring tube (insulating sleeve and tightening screw)	1

WIRED CONTROLLER INSTALLATION PRECAUTION

1. This manual provides the wired controller installation method. Refer to the wiring diagram (see step Fig. 6 — on page 9) for guidance on wiring the wired controller to the indoor unit.
2. The wired controller works in a low voltage circuit (5-12 VDC). **DO NOT** connect directly to any line voltage. Wiring clearance between the configured tubes should range 11.81-19.69 inches (30-50 cm) or above.
3. The shielded wire of the wired controller must be properly grounded.

NOTE: Upon completion of the wired controller connection, do not use any device to test the insulation.

CONTROLLER DIMENSIONS

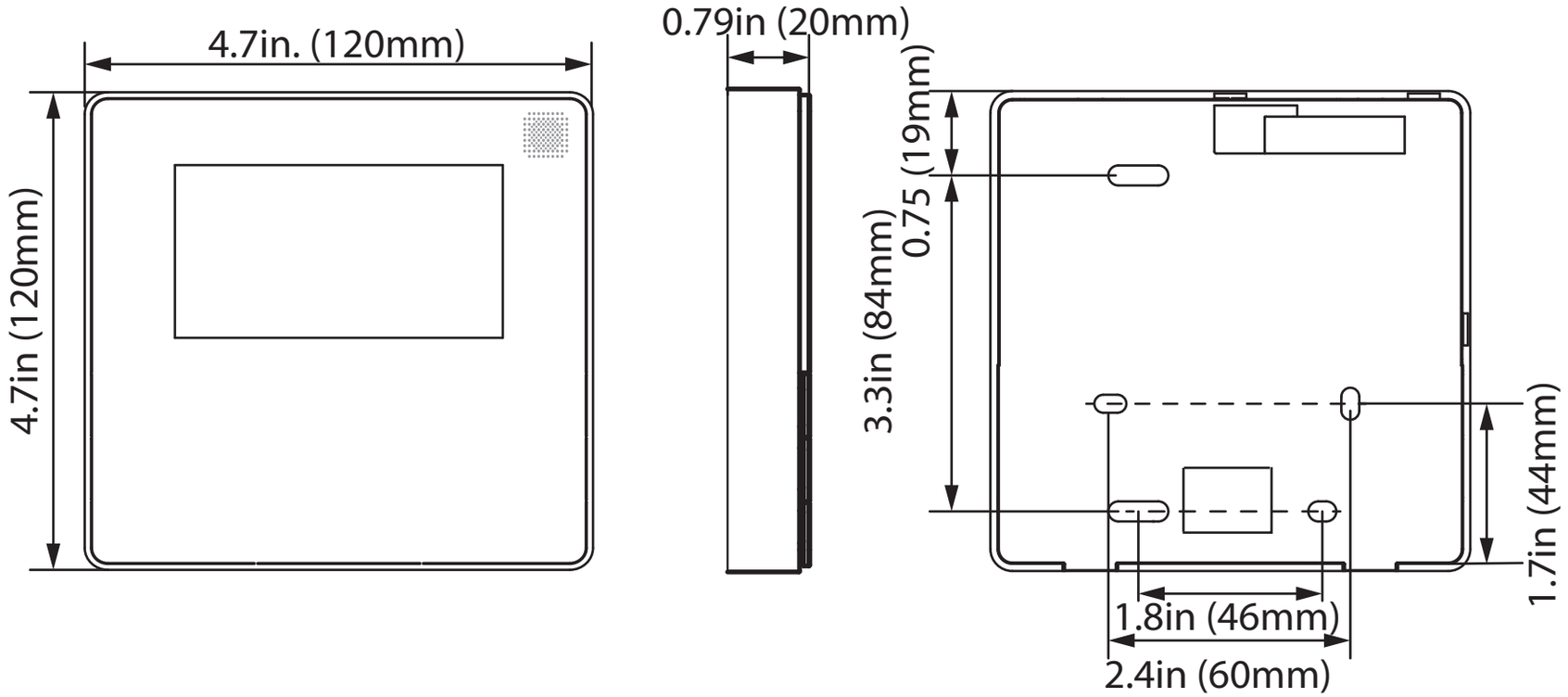

Fig. 2 — Wired remote controller structural dimensions

INSTALLATION

Use the following steps to install the wired controller.

1. Remove the back plate of the wired controller.
2. Insert a flat head screwdriver into the slots in the bottom of the wired controller (2 slots).

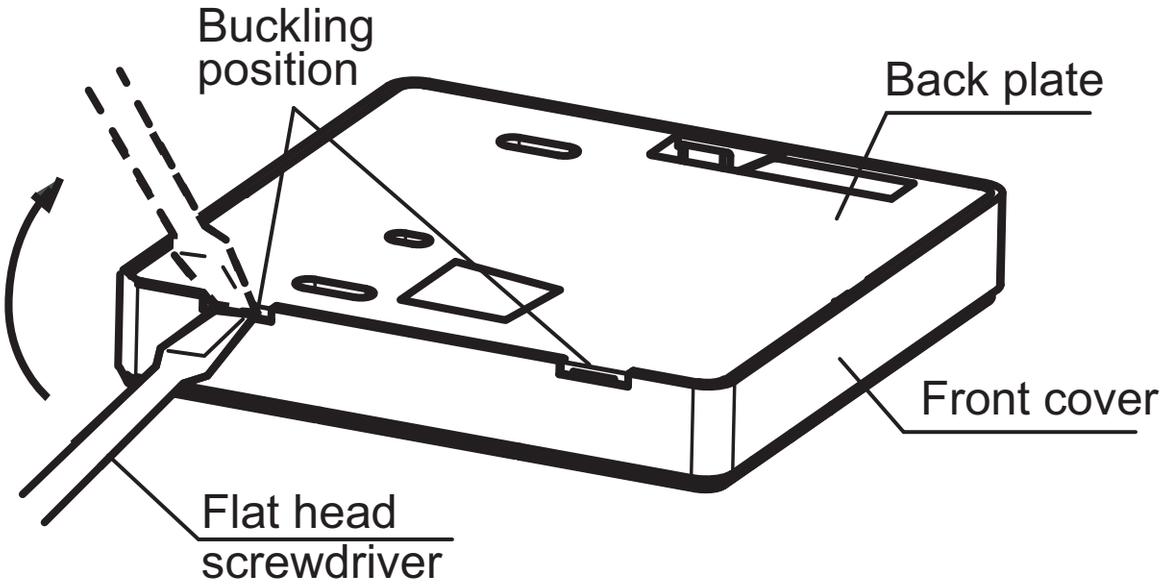

Fig. 3 — Remove the back plate of the wired controller

NOTE: The PCB is mounted to the front cover of the wired controller. Be careful not to damage the board with the screwdriver.

3. For exposed mounting, fasten the back plate on the wall with the 3 screws (M4×20) and plugs.

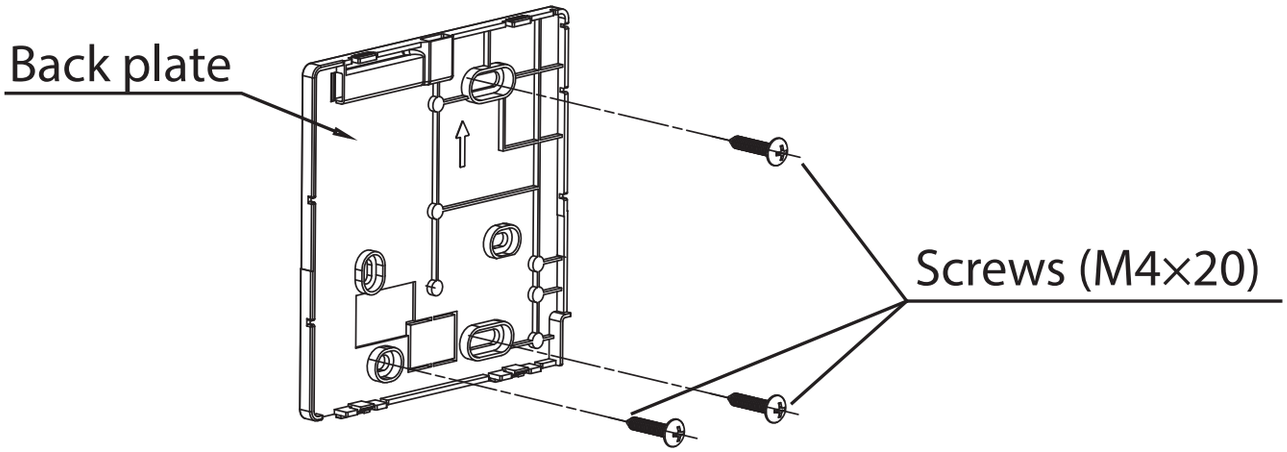

Fig. 4 — Back plate

4. Use two M4X25 screws to install the back plate. Use one M3.9X25 screw to secure to the wall.

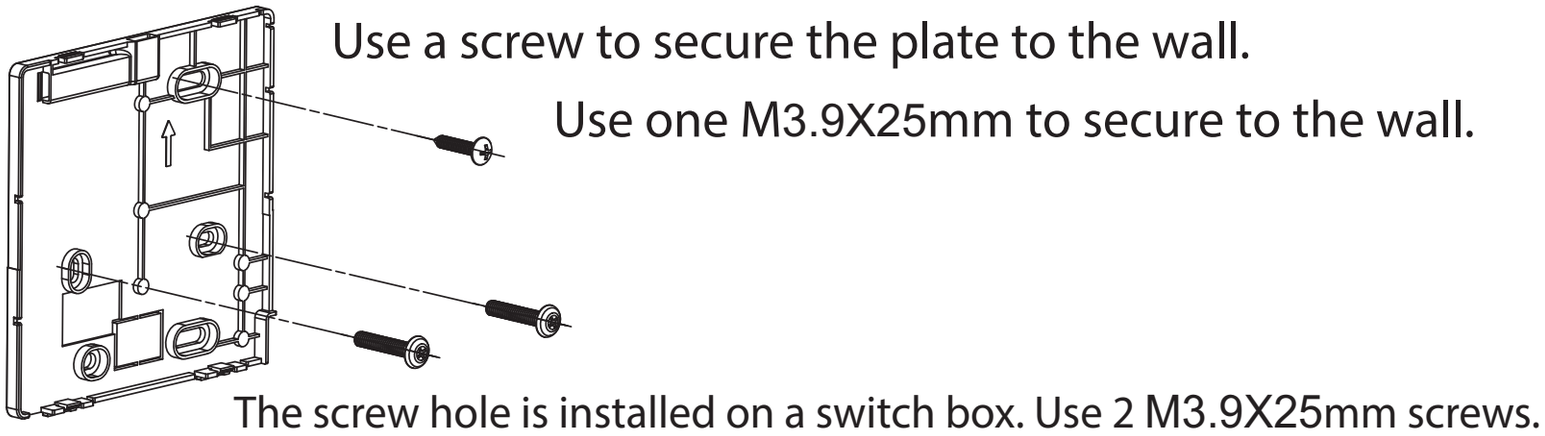

Fig. 5 — Screw to wall

a. The controller has a small, built-in power backup that allows the time and date to be set and maintained. This enables the controller to keep time even during a power outage.

5. Wiring Instructions:
Follow the indoor unit installation manual for proper connection.

NOTE: See "WIRING DIAGRAMS" on page 10 for installation on High Wall only**.**

NOTE: DO NOT allow water to enter the wired control. Use a trap and putty to seal the wires (see Fig. 6).

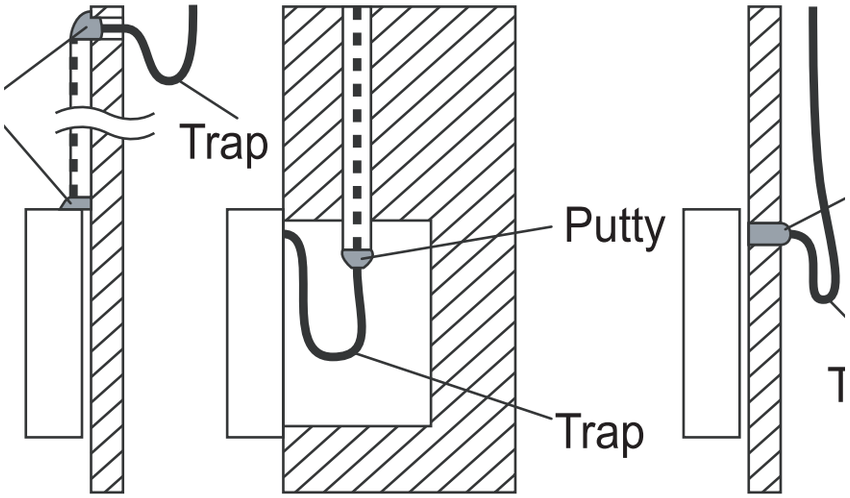

Fig. 6 — Seal the wires

6. Re-attaching the Front Cover of the Wired Controller

   While adjusting and mounting the front cover, avoid clamping the wiring during installation (see Fig 7).

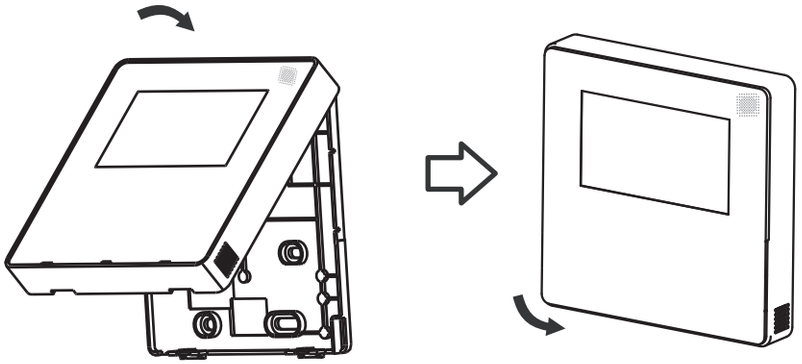

Fig. 7 — Reattach the Front Cover of the Wired Controller

WIRING DIAGRAMS

NOTE: The connection between CN32 and CN43 is not required.

6K-12K

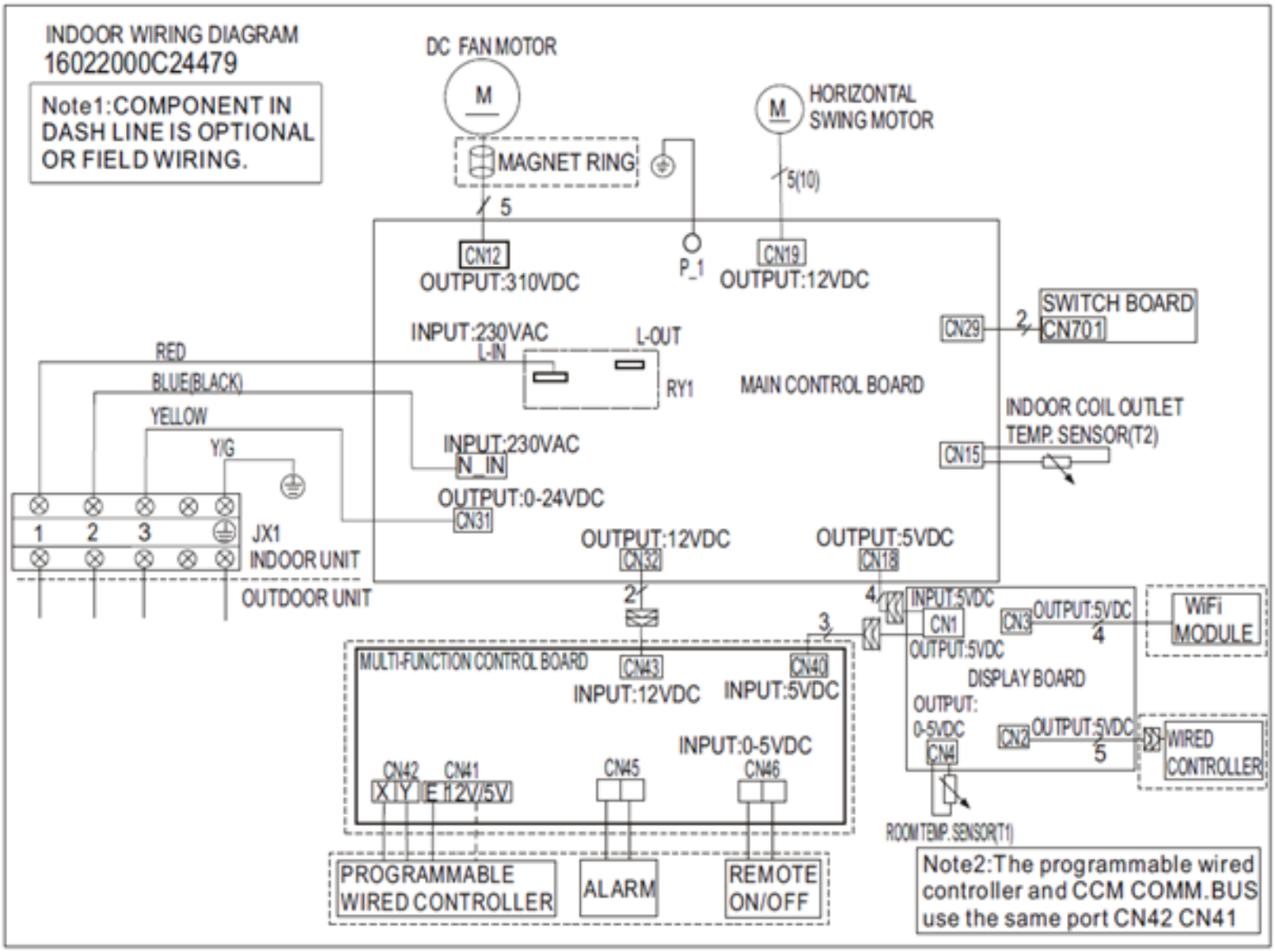

Fig. 8 — Wiring Diagram 6K-12K

WIRING DIAGRAMS (CONT)

18K-24K

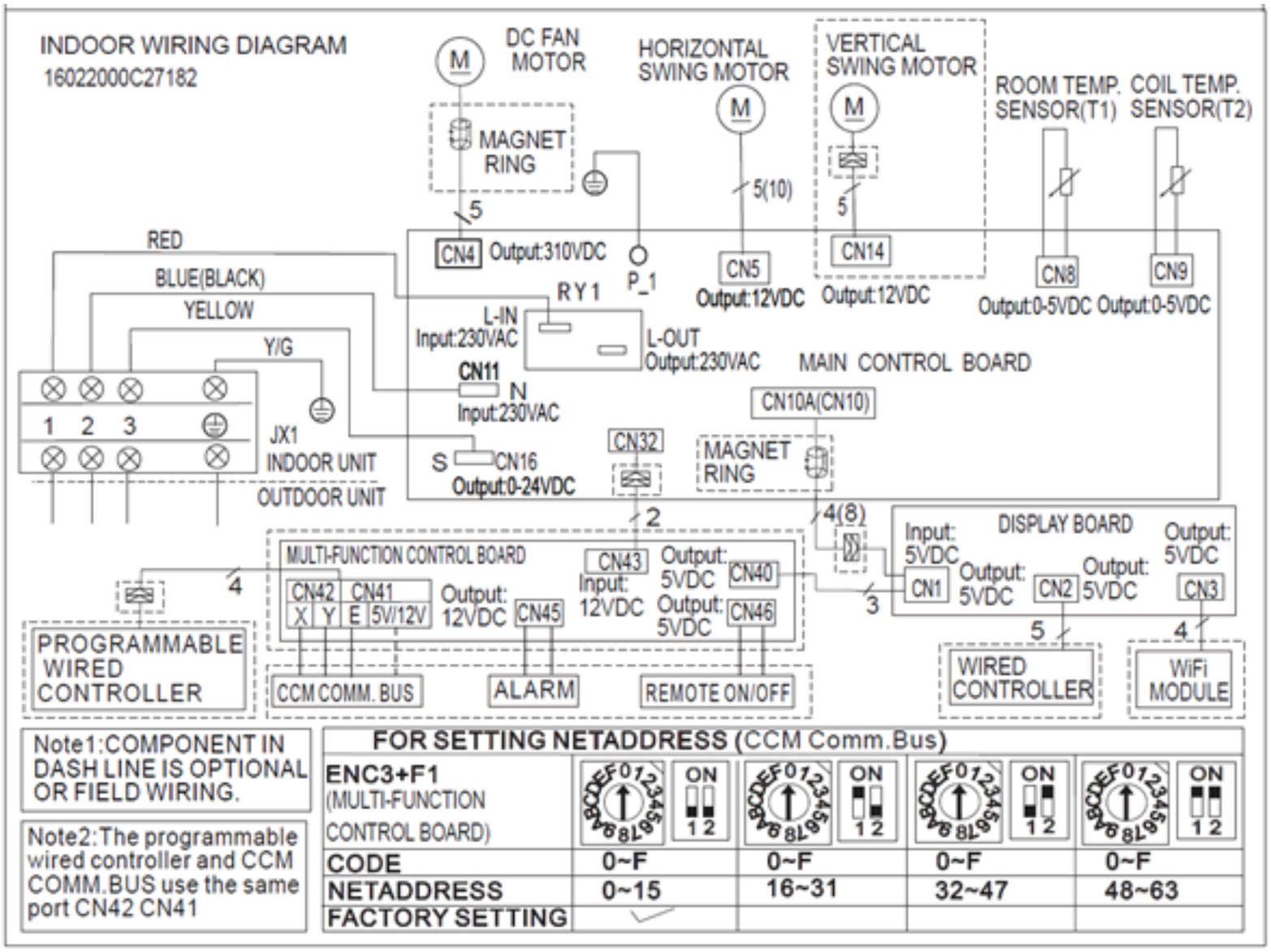

Fig. 9 — Wiring Diagram 18K-24K

TROUBLESHOOTING

For ease of service, the systems are equipped with diagnostic code display LEDs on the Wired Remote Controller, indoor and outdoor units. The indoor diagnostic display is a combination of flashing LEDs on the display panel or the front of the unit.

Some indoor units display error codes specifying failure modes in the outdoor units. If possible, always check the diagnostic codes displayed on the indoor unit first.

The diagnostic codes displayed in the indoor and wired remote controller are listed in Table 3.

Table 3 — Troubleshooting

DISPLAY ON IDU AND WIRED CONTROLLER	ERROR INFORMATION
EH 00/EH 0A	Indoor unit EEPROM parameter error
EL 01	Indoor/outdoor unit communication error
EH 02	Zero-crossing signal detection error
EH 03	Indoor fan operating outside of the normal range
EC 51	Outdoor unit EEPROM parameter error
EC 52	T3 is in open circuit or has short circuited
EC 53	T4 is in open circuit or has short circuited
EC 54	TP is in open circuit or has short circuited
EC 56	T2B is in open circuit or has short circuited
EH 60	T1 is in open circuit or has short circuited
EH 61	T2 is in open circuit or has short circuited
EC 07	Outdoor fan operating outside of the normal range
EH 0b	Indoor PCB/Display board communication error
EL 0C	Refrigerant leakage detection
PC 00	IPM malfunction or IGBT OSCP
PC 01	Over voltage or over low voltage protection
PC 02	Compressor or IPM high temp/pressure protection
PC 04	Inverter compressor drive error
PC 08	Current overload protection
PC 40	Comm. error between outdoor chip and compressor chip
PC 03	Low pressure protection
EH b1	Indoor board and Multi-function communication error
FH 0d	Ionizer malfunction

SPECIFICATION

Table 4 — Specification

INPUT	KSACN0901AAA: DC 5V
Ambient temperature	23~110F (-5~43C)
Ambient humidity	RH40%~RH90%

Table 5 — Wiring Specifications

WIRING TYPE	SIZE	MAXIMUM LENGTH
Sheathed vinyl cord or cable	0.029 in - 0.74mm (0.75 - 1.25mm2)	KSACN0901AAA: 66 ft (20m)

TECHNICAL INDICATIONS AND REQUIREMENT

EMC and EMI comply with the CE certification requirements.

APPENDIX

DISPLAY BOARD AND MULTIFUNCTION BOARD INSTALLATION ON DLFSHB HIGH WALL MODELS ONLY

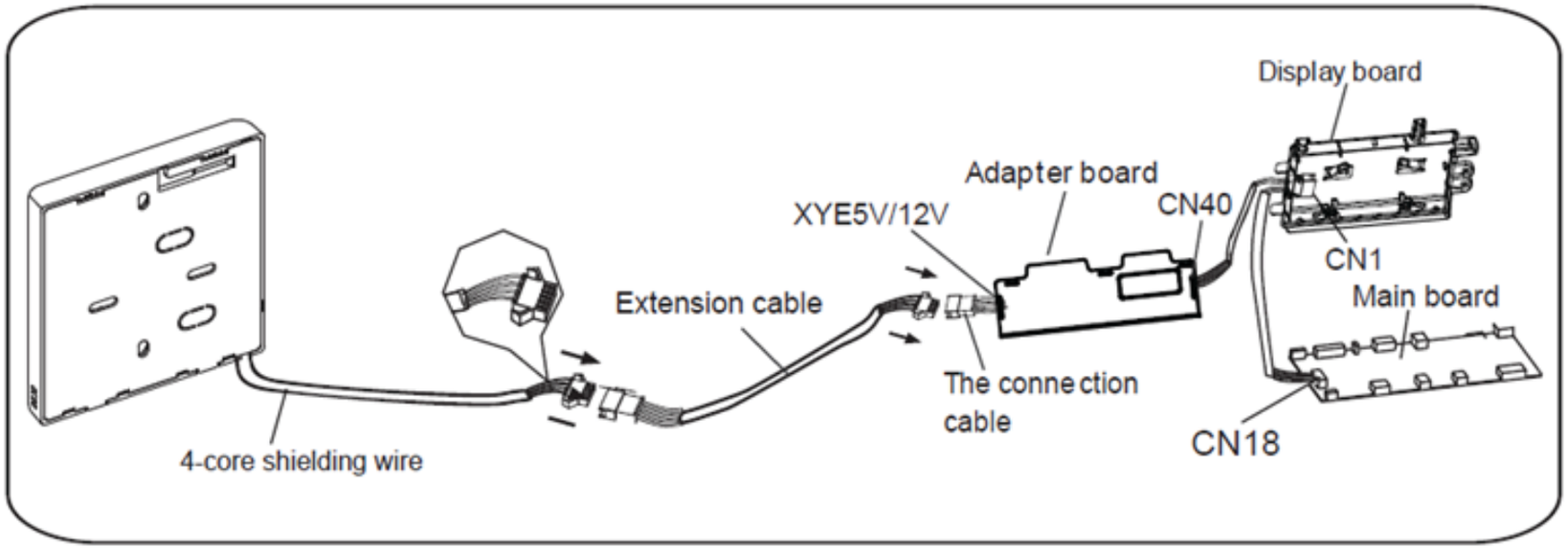

Fig. 10 — Installation of KSACN0901AAA

1. Remove the existing harness connecting the display and main boards and discard.
2. Install the Multifunction (Adapter) Board **ONLY** on the High Wall **DLFSHB**.
3. Install the white 7-pin plug to CN1 on the display board and the black 4-pin plug to the harness going to the main board (CN18/CN10).
4. Connect the wired controller to the remaining female connector on the adapter board. Use extension harness if needed.

1. Identify the components from left to right (multifunction board, extension harness, *black harness, mounting accessories, wired controller).

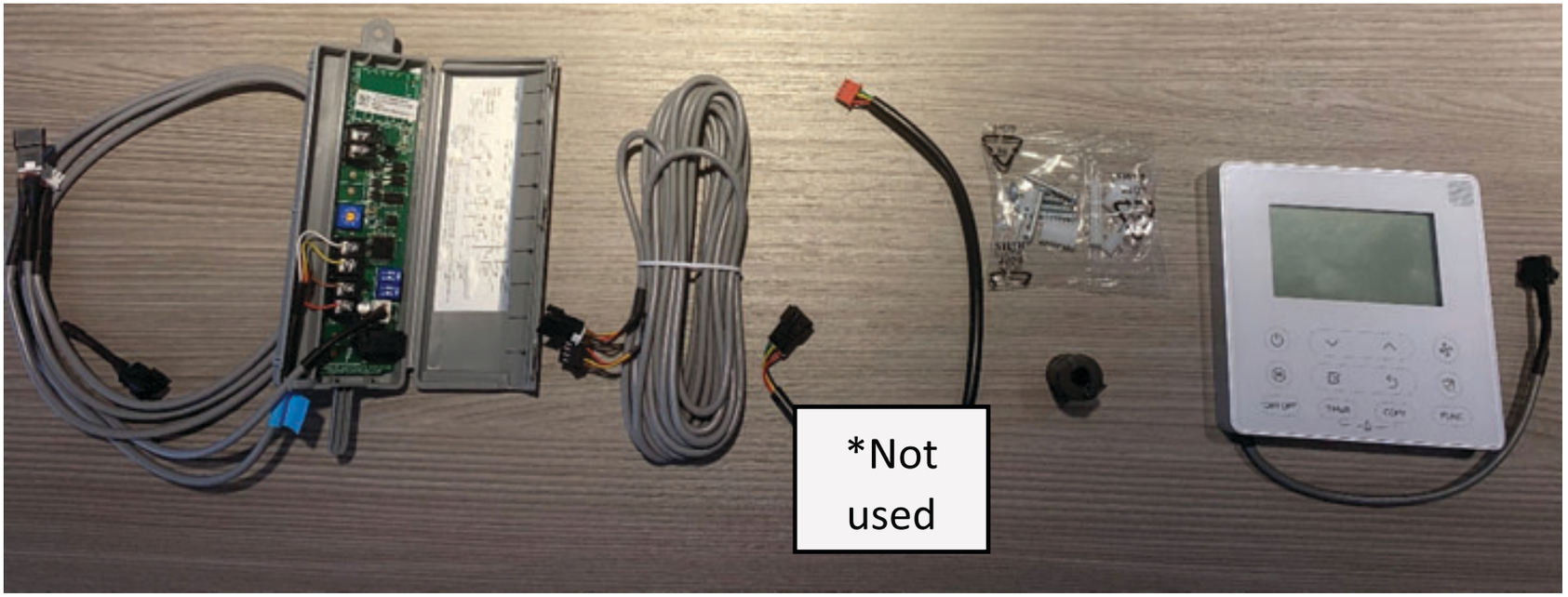

Fig. 11 — Identify the components

2. Open the front panel.

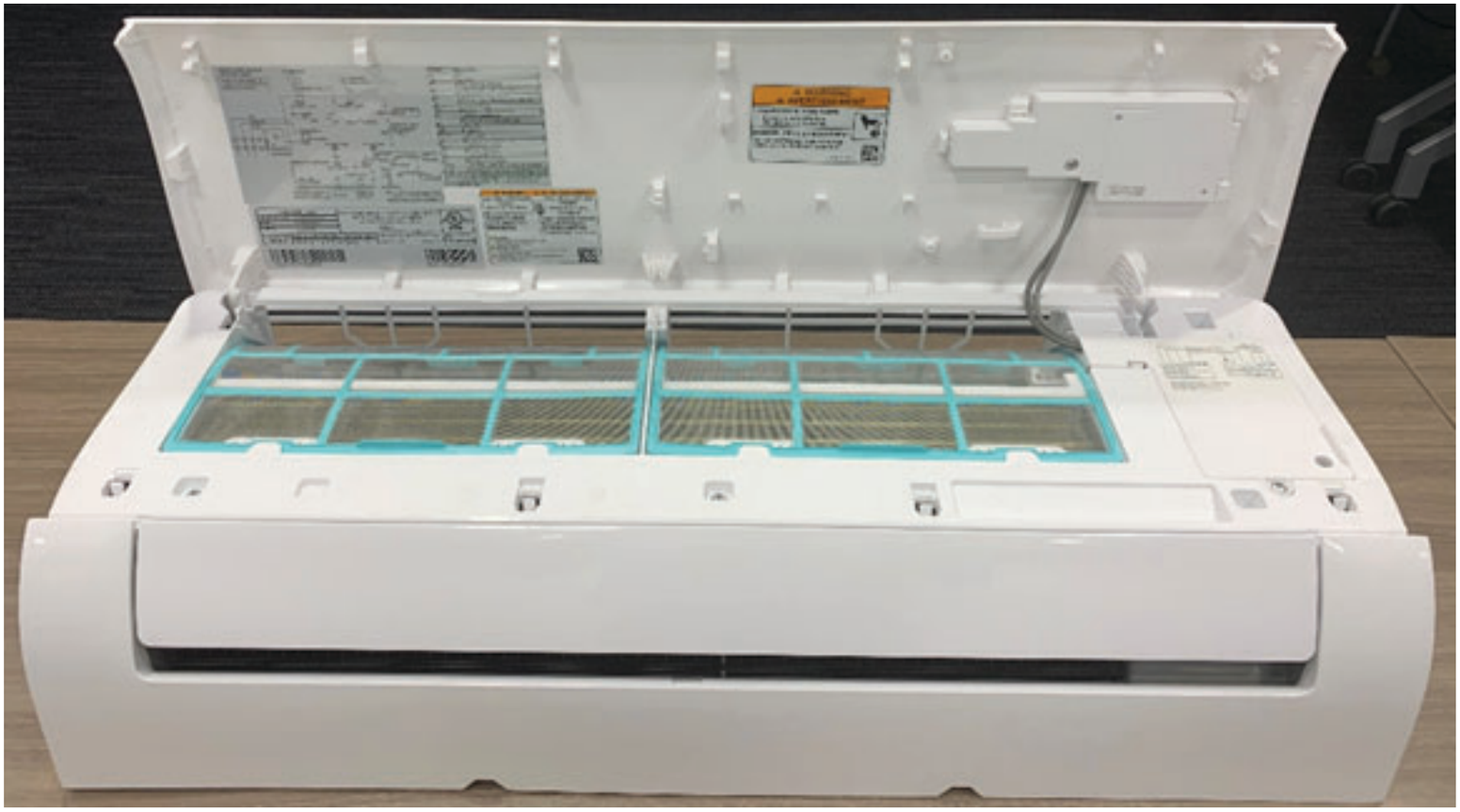

Fig. 12 — Open the front panel

3. Open the terminal block and the display board covers.

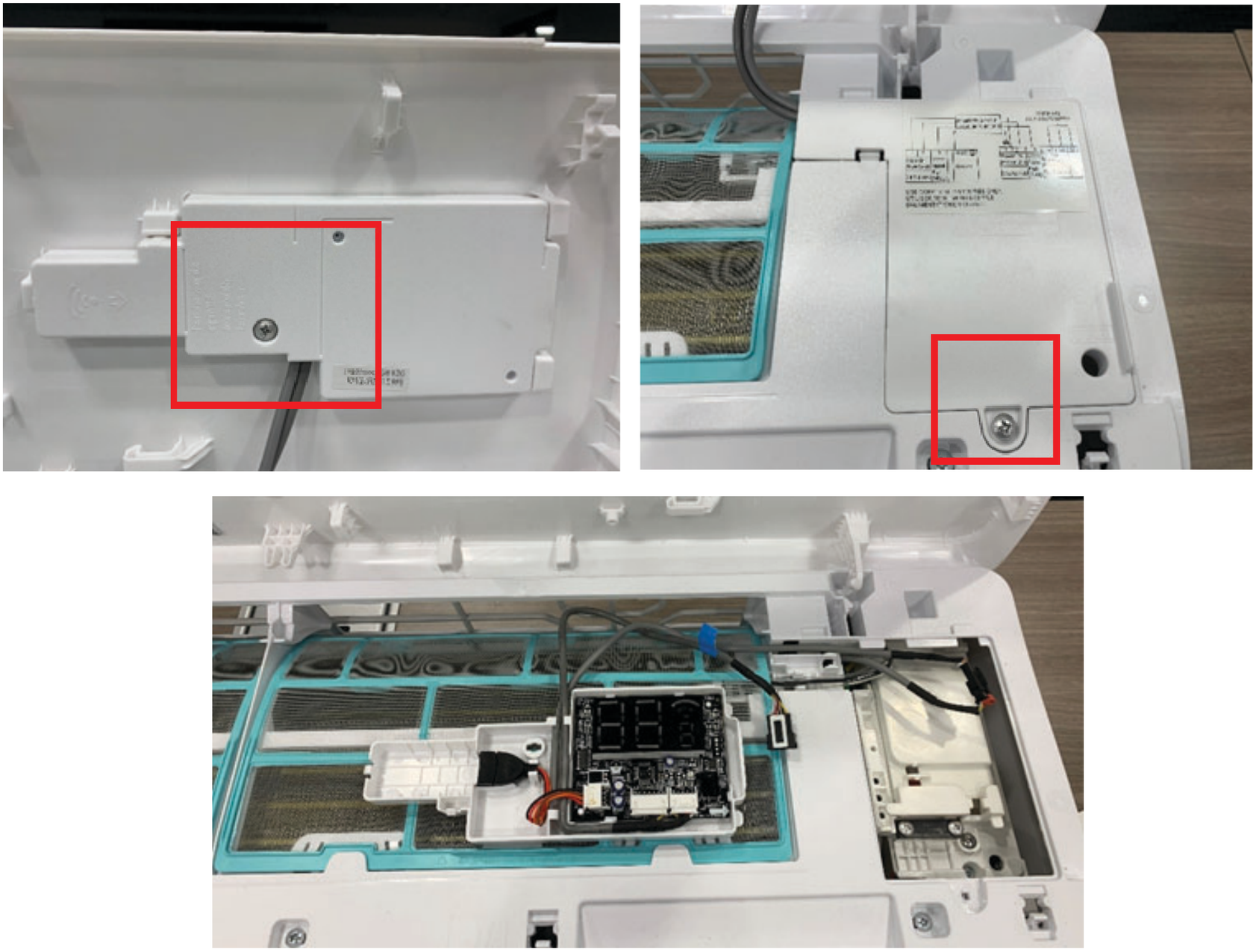

Fig. 13 — Open the terminal block and display board covers

4. Remove the harness connecting the display board to the main board (CN1 to CN18/CN10) and discard.

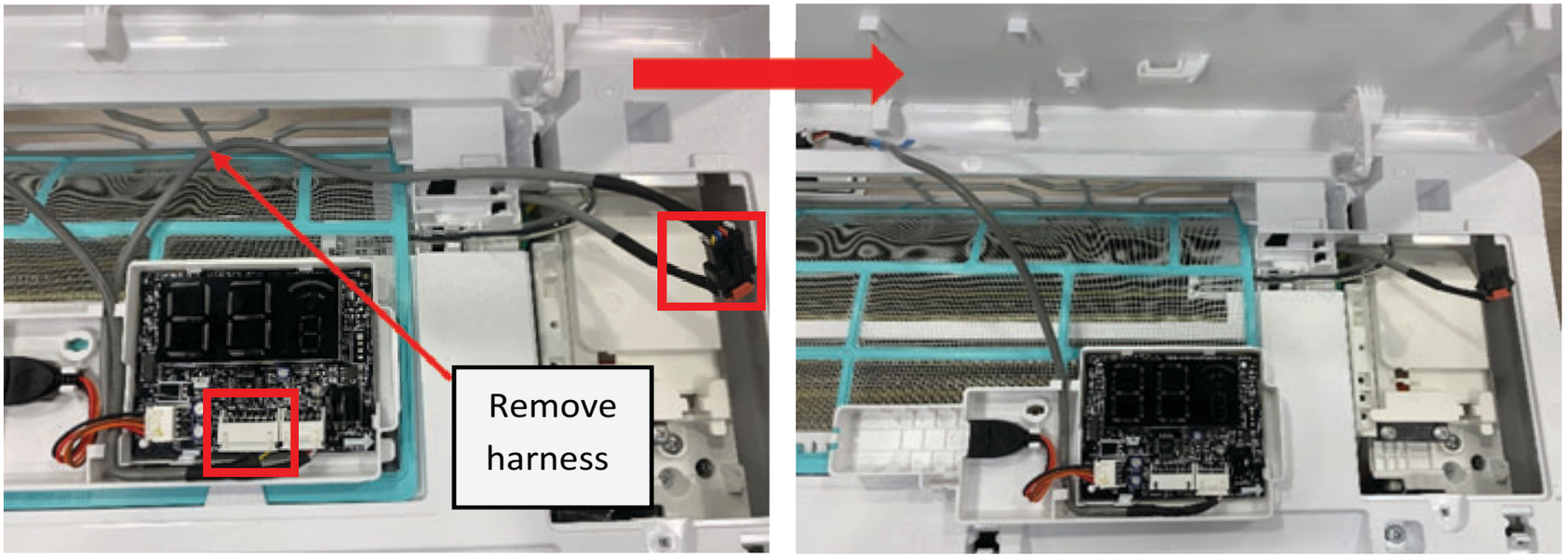

Fig. 14 — Remove the harness

5. Insert and screw the adapter board housing into place.

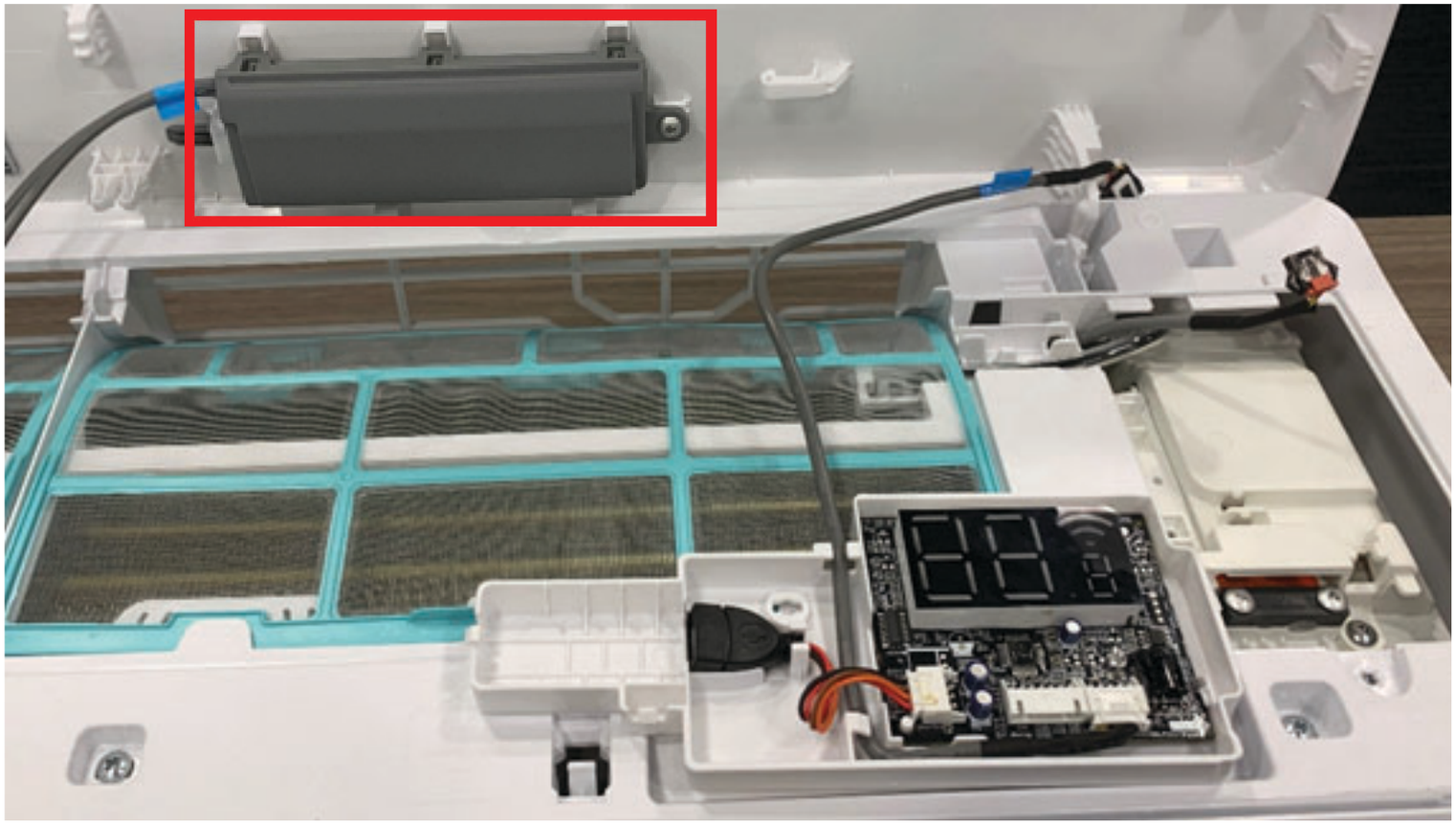

Fig. 15 — Insert and screw the adapter board into place

6. From the adapter board, install the white 7-pin plug to CN1 onto the display board and the black 4-pin plug to the harness going to the main board (CN18/CN10)

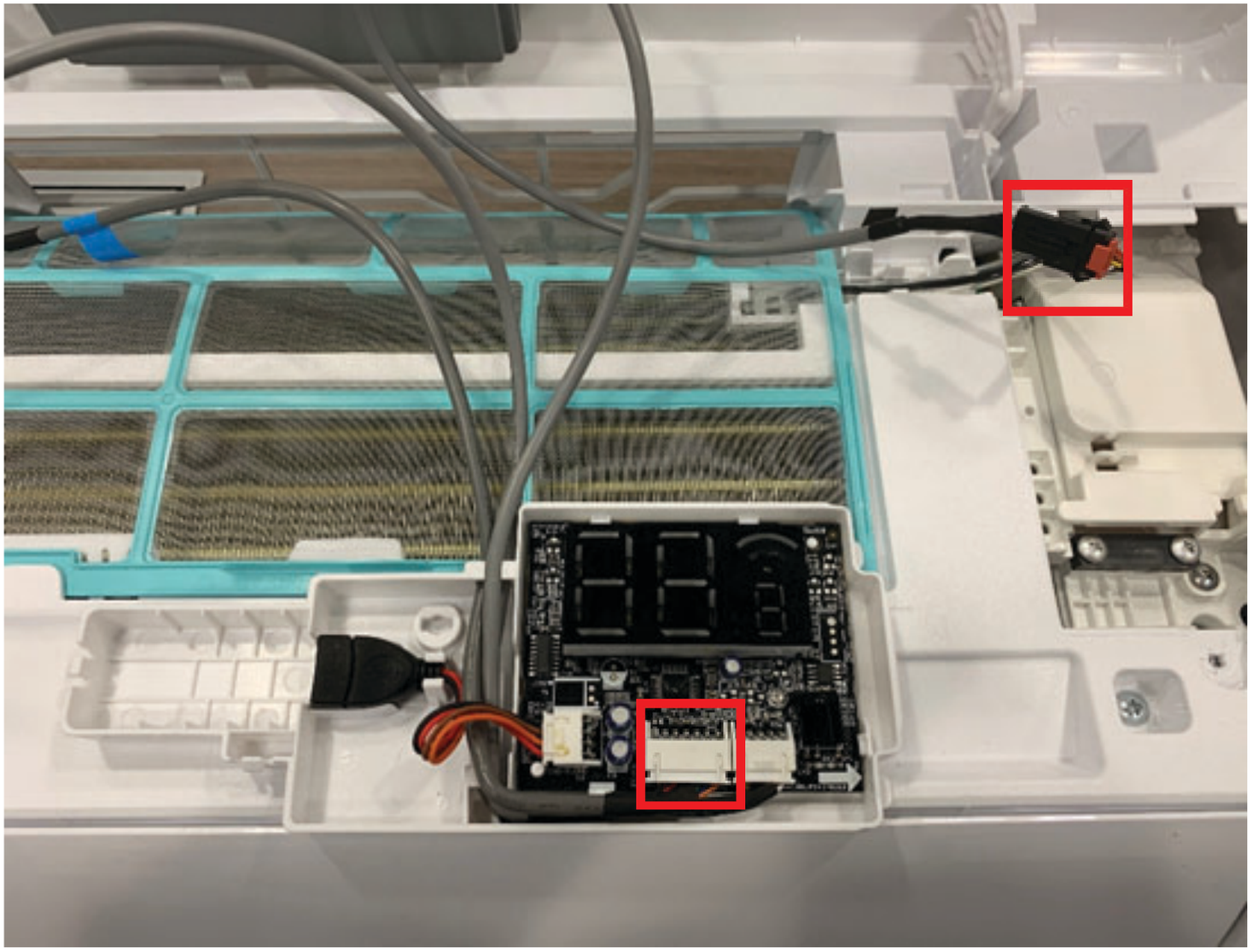

Fig. 16 — Install the white 7-pin plug

7. Close all the covers and install the extension harness (see step 2. on page 17).

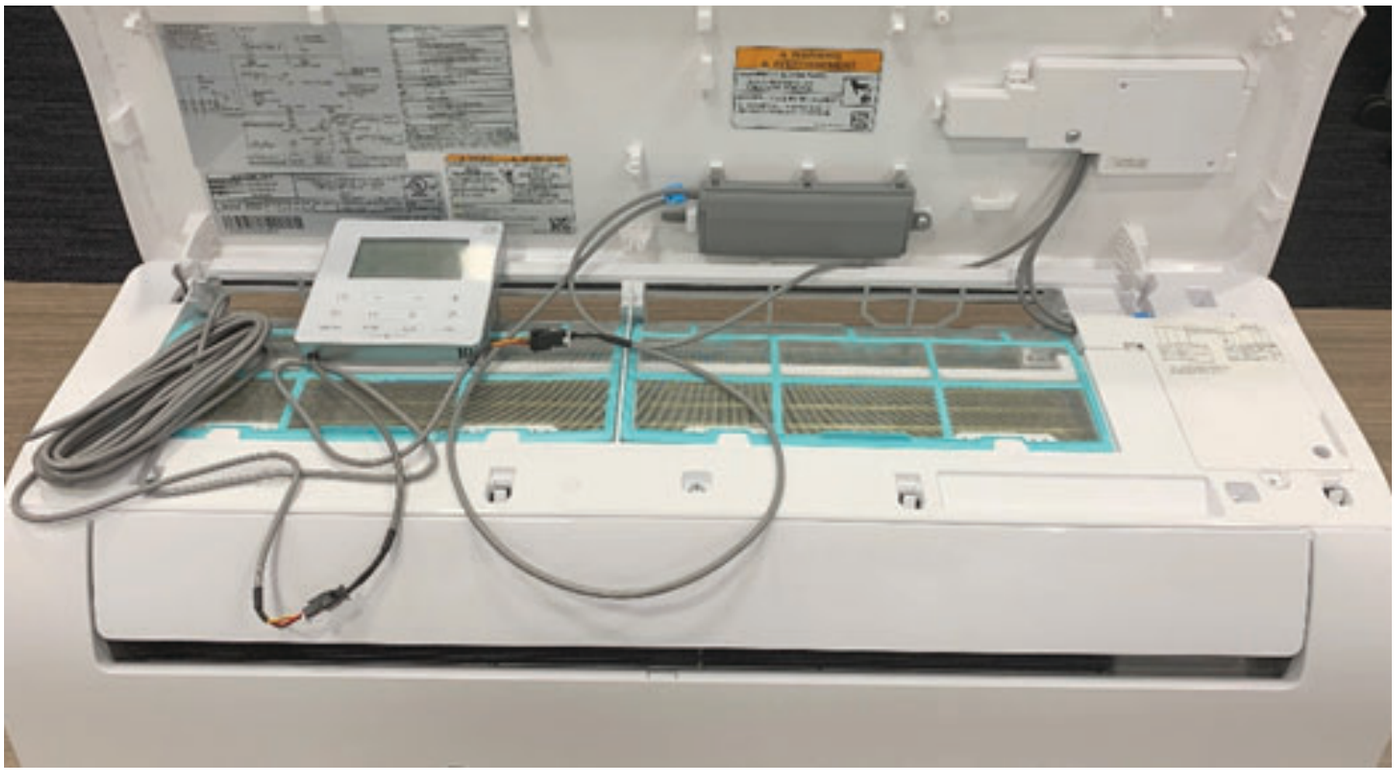

Fig. 17 — Close all the covers and install the extension harness

Manufacturer reserves the right to discontinue, or change at any time, specifications or designs without notice and without incurring obligations.