KSAIC0301230

24V Interface Kit
for Ductless Systems and Hybrid Solutions

Installation Instructions

Fig. 1 — 24V Interface

NOTES: Images are for illustration purposes only. Actual models may differ slightly.

Read and become familiar with these instructions before beginning the installation.

TABLE OF CONTENTS

PAGE

SAFETY CONSIDERATIONS....1
INTRODUCTION....2
ACCESSORIES....2
DIMENSIONS....3
CLEARANCES....3
INSTALLATION....4
SYSTEM CONFIGURATION SCENARIOS....4
SCENARIO 1: SINGLE ZONE OUTDOOR UNITS (38MPRA, 38MARB, 38MHR) WITH APPROVED DUCTLESS INDOOR UNITS....5
SCENARIO 2: SINGLE ZONE OUTDOOR UNITS (38MBRC) WITH APPROVED DUCTLESS INDOOR UNITS....6
SCENARIO 3: MULTI-ZONE OUTDOOR UNITS (38MGR*) WITH APPROVED DUCTLESS INDOOR UNITS....7
SCENARIO 4: SINGLE ZONE OUTDOOR UNIT 38MARB and 38MBRC (4 & 5 TON ONLY) WITH APPROVED MULTI-FAMILY 24V FAN COILS FMA/FX4D/FB4C/FMC/FMU....8
SCENARIO 5: SINGLE ZONE OUTDOOR UNIT 38MARB and 38MBRC (4 AND 5 TON ONLY) WITH APPROVED 24V FAN COILS FV4....9
TXV REPLACEMENT PROCESS FOR PIPING ADAPTER FOR CAP**/ CNPV* SERIES EVAPORATOR COILS....10
SCENARIO 6: SINGLE ZONE OUTDOOR UNIT 38MARB and 38MBRC (4 and 5 TON ONLY) WITH APPROVED FURNACES....11
WIRING....12
DIP SWITCHES CONFIGURATION....13
ERROR CODES....14
WIRING DIAGRAM....15
APPENDIX 1 - PIPING ADAPTER BUSHINGS/REDUCERS....16
APPENDIX 2 - FV4C TRANSFORMER....16
APPENDIX 3 - ADDITIONAL REFRIGERANT CHARGE FOR CONVENTIONAL FAN COILS....17
APPENDIX 4 - FV4C AIRFLOW DELIVERY....17
APPENDIX 5 - FURNACE RELAY FOR FURNACE OPERATION....18

SAFETY CONSIDERATIONS

Read these instructions thoroughly and follow all warnings or cautions included in the literature and attached to the unit. Consult the local building codes and National Electrical Code (NEC) for special requirements. Recognize safety information.

This is the safety-alert symbol ⚠. When you see this symbol on the unit and in instructions or manuals, be alert to the potential for personal injury. Understand these signal words: **DANGER**, **WARNING**, and **CAUTION**. These words are used with the safety-alert symbol.

DANGER identifies the most serious hazards which may result in severe personal injury or death. **WARNING** signifies hazards which could also result in personal injury or death. **CAUTION** is used to identify unsafe practices which may result in minor personal injury or product and property damage. **NOTE** is used to highlight suggestions which result in enhanced installation, reliability, or operation.

⚠ WARNING

ELECTRICAL SHOCK HAZARD
Failure to follow this warning could result in personal injury or death.
Before beginning any modification or installation of this kit, ensure the main electrical disconnect is in the **OFF** position. Ensure the power is not connected to the fan coil unit. On some systems, both the fan coil and the outdoor unit may be on the same disconnect. Tag the disconnect switch with a suitable warning label. There may be more than one disconnect.

⚠ CAUTION

EQUIPMENT DAMAGE HAZARD
Failure to follow this warning may result in equipment damage.
DO NOT install the wired controller in an area subjected to excessive steam, oil or sulfide gas. Doing so may cause the controller to deform and/or fail.

⚠ CAUTION

INSTALLATION
Entrust a licensed contractor to install the unit. Installation by unskilled persons may lead to improper installation, electric shock, or fire. Reinstallation must be performed by authorized professionals. Non-compliance may lead to electric shock or fire.

INTRODUCTION

The 24V Interface provides further flexibility, functionality and control which allows for a single zone or a multi-zone ductless system to be controlled by any 3rd party single-stage conventional thermostat* keeping the Inverter compressor operating as a variable-speed system, making adjustments to maintain more consistent operation.

Additionally the 24V interface provides compatibility between a ductless single zone outdoor unit, an approved residential conventional fan coil and a 3rd party single-stage conventional thermostat*.

Features:

- Keeps the Inverter compressor operating as a variable-speed system
- One 24V Interface Kit per indoor head is required
- Rated for outdoor and indoor mounting
- 24V transformer built-in (for ductless applications)
- Dry mode contact for active dehumidification control (for ductless applications)
- Remote on/off contact
- Auxiliary heat control through the third party conventional thermostat**
- Diagnostic code display LEDs

NOTES:

- ***A conventional 5-wire thermostat is required.**
- ****A secondary output is necessary for auxiliary heat control**

WARNING

EXPLOSION HAZARD
Failure to follow this warning could result in death, serious personal injury, and/or property damage.

Never use air or gases containing oxygen for leak testing or operating refrigerant compressors. Pressurized mixtures of air or gases containing oxygen can lead to an explosion.

WARNING

INSTALLATION
Entrust a licensed contractor to install the unit. Installation by unskilled persons may lead to improper installation, electric shock, or fire.

Re-installation must be performed by authorized professionals.

Non-compliance may lead to electric shock or fire.

ACCESSORIES

The system is shipped with the following accessories (see Table 1). Use all of the installation parts and accessories to install the system. Improper installation may result in, electrical shock and fire, or cause the equipment to fail. Keep the installation manual in a safe place and do not discard any accessories until the installation has been completed.

Table 1 — Accessories

No.	Description	Qty	Remarks
1	24V Interface Control box	1	N/A
2	Installation Manual	1	N/A
3	Screws	3	M4X20 (for wall mounting)
4	Wall Anchors	3	For wall mounting
7	Return Air Thermistor Assembly (Hybrid Solutions) (RCD part number 11201007003448)	1	Required and installed near or on the unit and on the air inlet side
8	16ft. (5m) Return Air Thermistor Assembly Extension Wires (RCD part number 17401204010126)	1	For a Return Air Temperature Sensor T1 on Conventional Fan Coil Solutions

Table 2 — Accessories

No.	Description	Qty	Type	Remarks
1	Switch Box	1	N/A	N/A
2	Wiring Tube (insulating sleeve and tightening screw)	1	N/A	N/A

WARNING

Wires must be properly sized according to the NEC/NFPA 70, CEC and all prevailing codes, ordinances and standards.

All conductors must be installed with a strain relief eliminating stress on the wire following installation which may result in wire damage and/or overheating with a potential for fire.

Installation must be performed in accordance with the requirement of NEC and CEC by authorized personnel only.

All wiring to be rated for the control box amperage rating.

All wiring installed to meet general industry standards and practices.

Do not install near flammable liquids or gases.

Do not operate the unit with wet hands, as this could lead to electrical shock.

CAUTION

When connecting with RS 485 communication to the outdoor unit, shielded wire must be used and grounded at one end only.

When using shielded wire the cable should be grounded at one end to reduce EMI.

Return Air Temperature Sensor T1 cable shall not exceed 23ft (7m).

DIMENSIONS

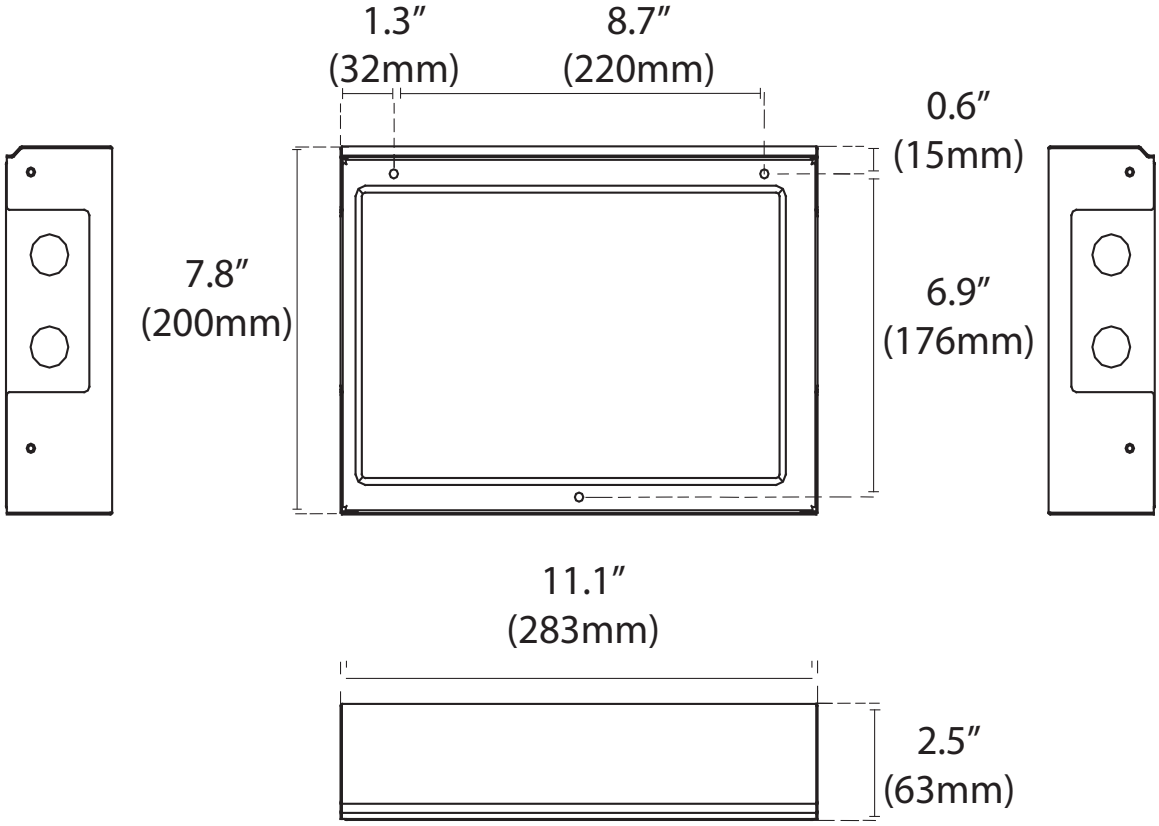

Fig. 2 — 24V Interface Structure Size

CLEARANCES

Table 3 — 24V Interface Clearance Dimensions

Clearances	
Unit	Minimum Value In (mm)
Sides	5.9 (150)
Front	24 (610)*
Top and Bottom	3 (76.2)

NOTE: *24 in (610mm) minimum for service access or use local code.

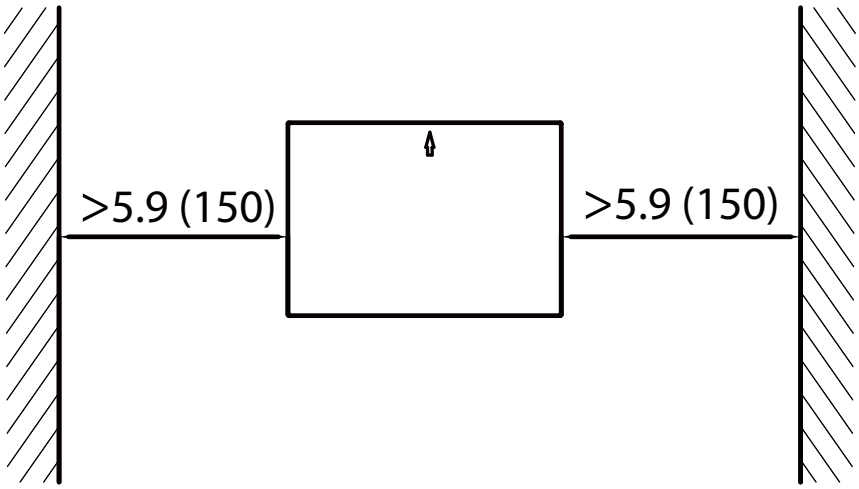

NOTE: ALL DIMENSIONS ARE IN INCH (MM)

Fig. 3 — Clearances

Manufacturer reserves the right to change, at any time, specifications and designs without notice and without obligations.

INSTALLATION

Installation Location

The 24V INTERFACE KIT is rated for outdoor and indoor mounting (depending on the application). It is recommended that the kit installation be as close as possible to the indoor unit and the thermostat.

IMPORTANT: Follow the recommended clearances (see "CLEARANCES" on page 3) and install in an area above the ground away from locations where water could enter.

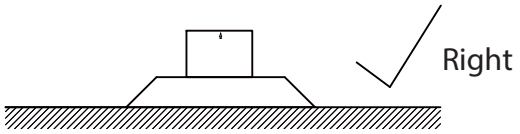

Fig. 4 — Installation Floor Mount View (right way)

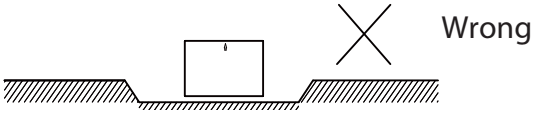

Fig. 5 — Installation Floor Mount View (wrong way)

CAUTION

DO NOT install the 24V INTERFACE KIT near flammable liquids or gases such as gasoline or hydrogen sulfide. Doing so creates a fire hazard.

1. Remove the cover of the **24V INTERFACE KIT.** Remove the six screws of the **24V INTERFACE KIT** with a screwdriver or similar tool. Rotate the lid along the hem to disassemble.

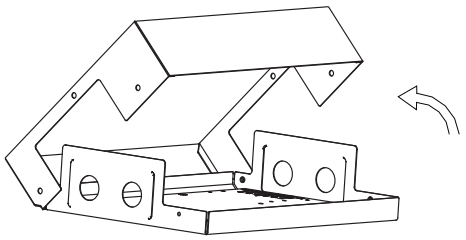

Fig. 6 — Remove the cover

NOTE: Minimum free space required around the kit is 7" (180 mm) for service purposes.

2. Mount the **24V INTERFACE KIT** horizontally (see Fig. 7), by fastening the back plate to the wall with 3 screws (M4x20) and anchors.

CAUTION

The 24V Interface kit cover has a directional arrow on the cover. In case of an outdoor installation be sure to verify, during the mounting process, that this arrow points **UP** upon installation. Failure to mount the kit correctly can cause water ingress into the box which may compromise the electrical component integrity.

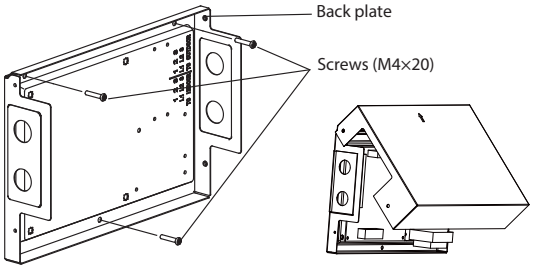

Fig. 7 —24V Interface Kit

NOTE: Place the unit on a flat surface. Be careful not to distort the back plate of the 24V INTERFACE KIT by over-tightening the screws.

3. **WIRING** - Based on the system used, wire the unit as described in "SYSTEM CONFIGURATION SCENARIOS" on page 4).
4. Cover the **24V INTERFACE KIT** lid, and lock back in place using the six screws previously removed.

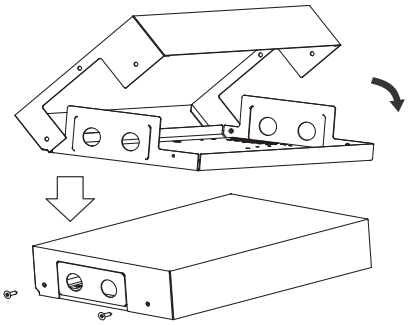

Fig. 8 — Cover the screw

SYSTEM CONFIGURATION

NOTES:

- The thermostat should be configured for use with as a single stage **COOLING** and **HEATING** (**DO NOT** configure the thermostat as a Heat Pump).
- The wireless remote controller, wired controller KSACN and Wi-Fi kits KSAIF cannot be used with this 24V interface Kit at the same time. The **SWING** and **LED** function may be accessed with the wireless remote controller.

Table 4 — Connection Wiring Specification

Connection Wiring	Outdoor L1, L2, S & G, S1, S2	Indoor L1, L2, S & G, S1, S2	R,C	Y/W/G/G1/ G2/G3/Dry
Size	Refer to the outdoor connecting wires size	Refer to the indoor connecting wires size	18AWG (minimum)	18AWG (minimum)

SYSTEM CONFIGURATION SCENARIOS

Based on the system, utilize the appropriate configuration scenario:

Scenario 1: Single Zone Ductless System with 38MPRA, 38MARB, 38MHR

Scenario 2: Single Zone Ductless System with 38MBR/38MBRB

Scenario 3: Multi-zone Ductless System with 38MGR

Scenario 4: Single Zone Fan Coils FMA/FX4D/FB4C with 38MARB

Scenario 5: Single Zone Fan Coils FV4C with 38MARB

Scenario 6: Compatible Single Zone Furnace with 38MARB

Manufacturer reserves the right to change, at any time, specifications and designs without notice and without obligations.

SCENARIO 1: SINGLE ZONE OUTDOOR UNITS (38MPRA, 38MARB, 38MHR) WITH APPROVED DUCTLESS INDOOR UNITS

- High Wall (sizes 6K-36K)[208-230V]**
- Cassette (sizes 9K-24K)
- Ducted (sizes 9K-24K) (*refer to **NOTES** in the adjacent column)
- Console (sizes 18K-24K)

⚠ CAUTION

Refer to the Compatibility Charts on hvacpartners.com for the proper matches and serial number compatibility. Units built prior to the generation of this serial number require a Control Board Replacement on the indoor unit.

Installation Steps:

1. Run the interconnecting piping from the indoor to the outdoor unit using the correct indoor piping size.
2. Run the interconnecting wiring from the outdoor unit to the 24V interface using terminal connections L1(1), L2(2), S(3) and G.
3. Run the interconnecting wiring from the 24V interface to the indoor unit using terminal connections L1(1), L2(2), S(3) and G.
4. Run the thermostat wiring from the thermostat to the 24V interface using connections R and C on CN15 and Y, W, G on CN19.
5. Configure the dip switches on the 24V interface accordingly.
6. Configure the thermostat to operate in single stage cooling and heating scenarios **(DO NOT configure the thermostat as a Heat Pump).**

NOTES:

Follow the indoor and outdoor unit's general installation instructions.

*For the Ducted units, in order to initially setup the static pressure, the 24V interface must be bridged. Temporarily connect the communication wires L1, L2, S and G from the indoor to the outdoor unit until the static pressure settings are complete (refer to the Ducted unit installation manual).

On selected indoor units, the Up-Down Swing Louver functions as a control to turn off the indoor unit display (LED) and is available on the unit's wireless remote controller. The Wi-Fi KSAIF and wired remote controllers KSACN are not functional when using the 24V interface.

**For 115V Ductless applications, the 24V transformer must be replaced in the field. This part is available through RCD (part number 11203103000393).

⚠ CAUTION

The conventional thermostat must be configured for use with a single stage air conditioner (Y output **ONLY**) and a single stage heating (W) system.

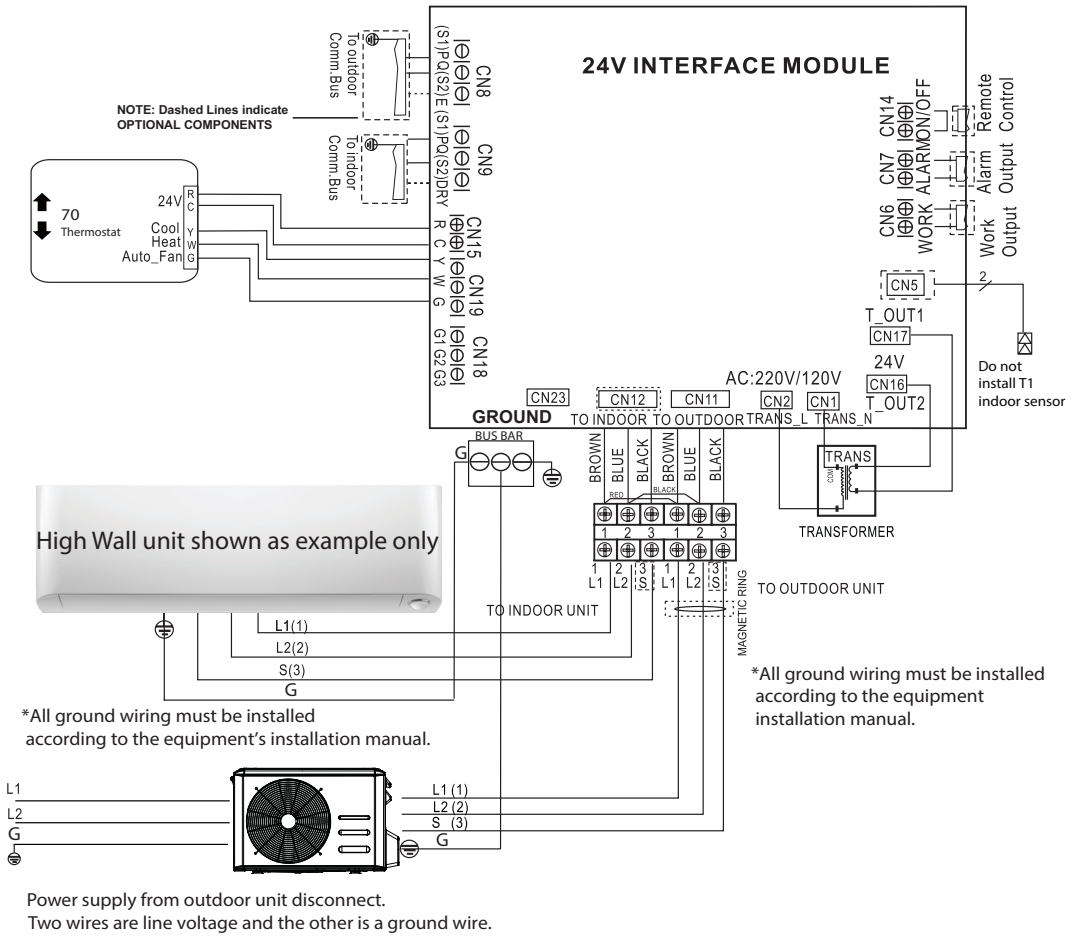

Fig. 9 — Wiring Diagram

IMPORTANT: All ground wiring must be installed according to the equipment's installation manual.

SCENARIO 2: SINGLE ZONE OUTDOOR UNITS (38MBRC) WITH APPROVED DUCTLESS INDOOR UNITS

- Cassette (sizes 36K-48K)
- Ducted (sizes 36K-58K) (*refer to **NOTES** in the adjacent column)
- Console (sizes 36K-58K)

⚠ CAUTION

Refer to the Compatibility Charts on hvacpartners.com for the proper matches and serial number compatibility. Units built prior to the generation of this serial number would require a Control Board Replacement on the Indoor unit.

Installation Steps:

1. Run the interconnecting piping from the indoor unit to the outdoor unit using the correct indoor piping size.
2. Run the interconnecting wiring from the outdoor unit to the 24V interface using terminal connections L1(1), L2(2), and G. Connect the wiring for the S1 and S2 outdoor interface to CN8.
3. Run the interconnecting wiring from the 24V interface to the indoor unit using terminal connections L1(1), L2(2) and G. Connect the wiring for the S1 and S2 outdoor interface to CN9.
4. Run the thermostat wiring from the thermostat to the 24V interface using connections R and C on CN15 and Y, W, G on CN19.
5. Configure the dip switches on the 24V interface accordingly.
6. Configure the thermostat to operate in single stage cooling and heating scenarios (**DO NOT** configure the thermostat as a **Heat Pump**).

NOTES:

Follow the indoor and outdoor unit's general installation instructions.

*For Ducted units, in order to initially setup the static pressure, the 24V interface must be bridged. Temporarily connect the communication wires, S1 and S2, from the indoor unit to the outdoor unit until the static pressure settings are complete (see the Ducted unit installation manual). When the static pressure is adjusted, connect S1 and S2 to CN8 and CN9 (see Fig. 21).

On selected indoor units, the Up-Down Swing Louver functions as a control to turn off the indoor unit display (LED) and is available on the unit's wireless remote controller. The Wi-Fi accessories KSAIF and wired remote controllers KSACN are not functional when using the 24V interface.

⚠ CAUTION

The conventional thermostat must be configured for use with a single stage air conditioner (Y output **ONLY**) and a single stage heating (W) system.

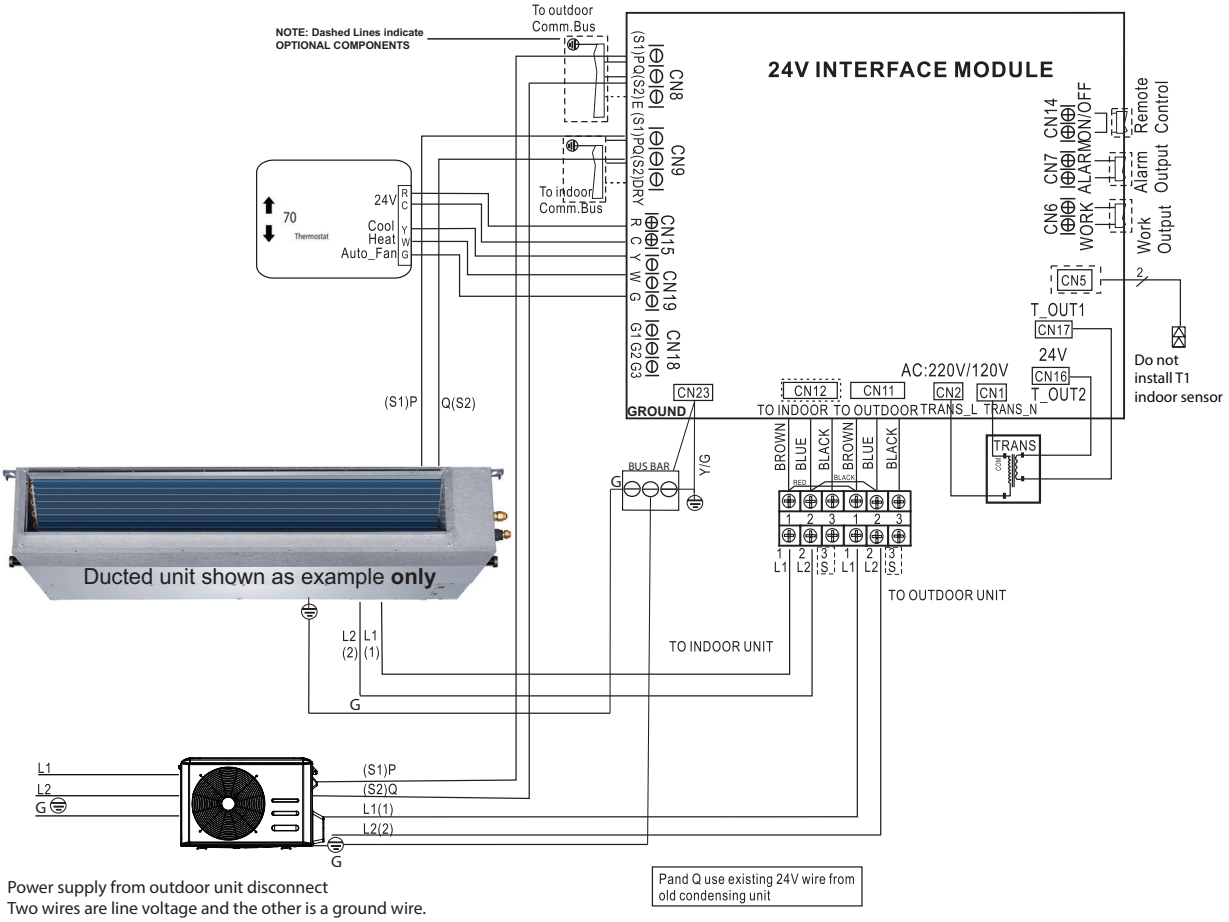

Fig. 10 — Wiring Diagram

SCENARIO 3: MULTI-ZONE OUTDOOR UNITS (38MGR*) WITH APPROVED DUCTLESS INDOOR UNITS

- High Wall (Sizes 6K-24K)
- Cassette (Sizes 9K-24K)
- Ducted (Sizes 9K-24K) (*refer to **NOTES** in the adjacent column)
- Console (Sizes 12K-24K)
- Air Handler (Size 18K-36K)

⚠ CAUTION

Refer to the Compatibility Charts on hvacpartners.com for the proper matches and serial number compatibility. Units built prior to the generation of this serial number require a Control Board Replacement on the indoor unit.

Installation Steps:

1. Run the interconnecting piping from the indoor unit to the outdoor unit using the correct indoor piping size.
2. Run the interconnecting wiring from the outdoor unit to the 24V interface using terminal connections L1(1), L2(2), S(3), and G.
3. Run the interconnecting wiring from the 24V interface to the indoor unit using terminal connections L1(1), L2(2), S(3) and G.
4. Run the thermostat wiring from the thermostat to the 24V interface using connection R and C on CN15 and Y, W, G on CN19.
5. Configure the dip switches on the 24V interface accordingly.
6. Configure the thermostat to operate in single stage cooling and heating scenarios (**DO NOT** configure the thermostat as Heat Pump).

*For Ducted units, in order to initially setup the static pressure, the 24V interface must be bridged. Temporarily connect the communication wires L1, L2, S and G from the indoor to the outdoor unit until the static pressure settings are complete (see the Ducted unit installation manual). When static pressure is adjusted, reconnect L1, L2, S and G wires to the terminal blocks.

In the **AUTO** mode, the system automatically cools or heats the room according to the user-selected set point.

AUTO mode is recommended for use on single zone applications only. Using **AUTO** changeover on multi-zone applications could set an indoor unit to **STANDBY** mode, indicated with two dashes (--) on the display. Should this occur, the indoor unit powers off until all the indoor units are in the same mode (**COOLING** or **HEATING**). **HEATING** is the system's priority mode. Simultaneous **HEATING** and **COOLING** is not allowed.

On selected indoor units, the **Up-Down Swing Louver** functions as a control to turn off the indoor unit display and is available on the unit's wireless remote controller. The Wi-Fi accessories KSAIF and wired remote controllers KSACN are not functional when using the 24V interface.

⚠ CAUTION

The conventional thermostat must be configured for use with a single stage air conditioner (Y output **ONLY**) and a single stage heating (W) system.

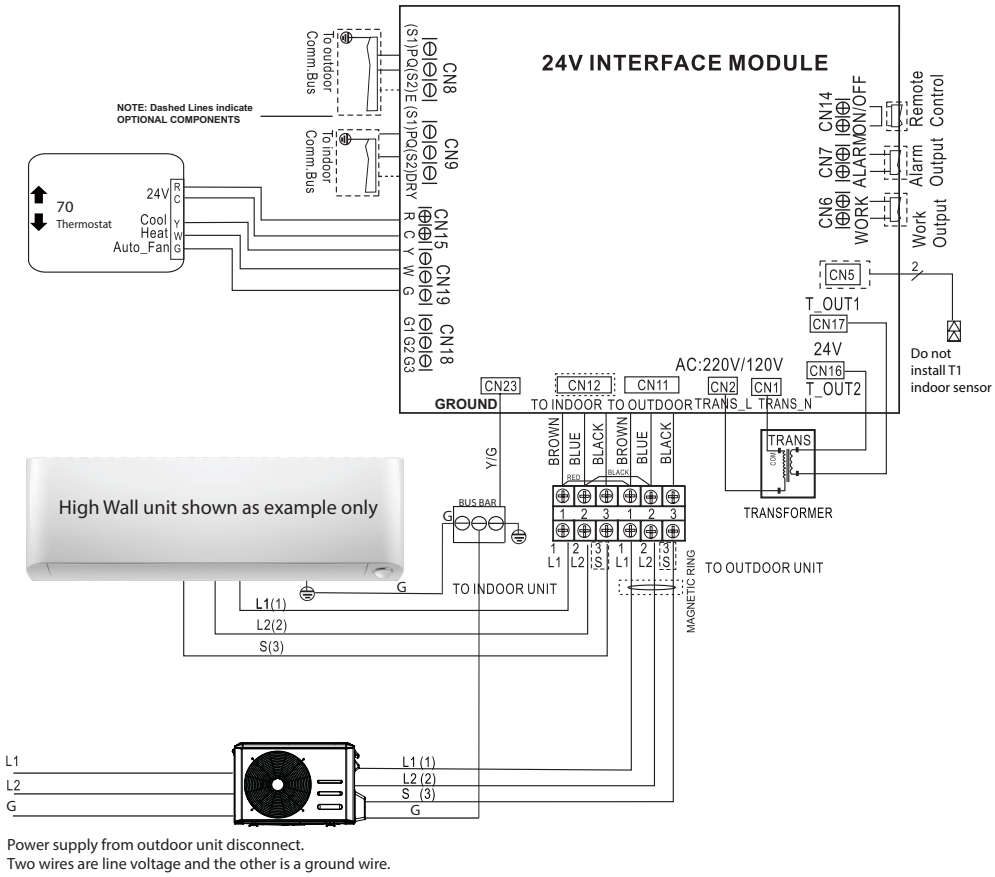

Fig. 11 — Wiring Diagram

SCENARIO 4: SINGLE ZONE OUTDOOR UNIT 38MARB and 38MBRC (4 & 5 TON ONLY) WITH APPROVED MULTI-FAMILY 24V FAN COILS FMA/ FX4D/FB4C/FMC/FMU

Installation Steps:

1. Remove the TXV/Piston on the indoor unit.
2. Run the interconnecting piping from the outdoor unit to the indoor unit using the outdoor piping size and brazing to the adapter for the mechanical fitting from which the TXV was removed (Part number 331831-701) (available through RCD). If required, use the Bushing/ Reducers data (review “APPENDIX 1 - PIPING ADAPTER BUSHINGS/REDUCERS” on page 16).
3. Suction and liquid refrigerant lines must be properly insulated and separated from each other to prevent condensation and energy loss.
4. Disconnect and remove the 24V transformer from the 24V interface kit. Run a 2-conductor wire from the 24 volt side of the indoor unit transformer to CN16 and CN17. Connect “R” to CN17 and “C” to CN16 on the 24 Volt Interface.
5. Run the interconnecting wiring (14-3 AWG stranded power cable with ground and 600 volt insulation rating) from the outdoor unit to the 24 Volt Interface using terminal connections L1(1), L2(2) and G. For 38MARB models, S(3) needs to be connected to CN11 next to terminals L1(1) and L2(2). For 38MBRC models, connect the wiring for the S1 and S2 outdoor interface to CN8 instead, S1 connects to P (top terminal) and S2 connects to Q (middle terminal) . Connect the ground wire (G) to the ground BUS BAR, CN23. Separate power supplies are required for the outdoor unit and the indoor unit.
6. Run the thermostat wiring from the thermostat to the 24V interface using connection R and C on CN15 and Y, W, G on CN19.
7. Connect “G1” on CN18 of the 24 Volt Interface to the “G” terminal on the fan coil.
8. Install the T1 sensor on CN5 on the 24V interface and place on the return of the indoor unit.
9. Configure the dip switches on the 24V interface accordingly.
10. Configure the thermostat to operate as a single stage cooling and heating (**DO NOT** configure the thermostat as Heat Pump).

NOTES: Follow the indoor and outdoor unit's general installation instructions.

The T1 (Return air temperature) sensor should be near or on the unit on the air inlet side. The thermistor should be installed pointing down into the duct between 2.5ft. (0.762m) and 4ft. (1.2m) from the return side of the fan coil. Use a 1/2” drill and insert the thermistor no less than 6 in. (15.24cm) into the duct and seal air tight around cable.

Auxiliary Heater on an FMA/FX4D/FB4C/FMC/FMU:

Refer to and follow the steps of the FMA/FX4D/FB4C/FMC/FMU Fan Coil Installation Instructions manual and wiring diagram:

1. Wire W2 from the thermostat directly to the FMA/FX4D/FB4C/FMC/ FMU fan coil as listed on the indoor unit wiring diagram.
2. Re-configure the wall thermostat to control the electric heat as a 2nd stage heat W2.
3. Follow the standard wiring practices of the FMA/FX4D/FB4C/FMC/ FMU to connect the Auxiliary Electric Heater element.

NOTE: When an auxiliary electric heater is connected and active by W2 from the thermostat, the fan coil keeps blowing air regardless if the outdoor unit is operating under **DEFROST** mode.

CAUTION

When the outdoor unit is matched with a Multi-Family or Residential fan coil and brazing the piping on the fan coil side is required, it is **NECCESSARY** to flow nitrogen into the system while brazing the line set since a filter drier is not recommended for use with these condensing units.

CAUTION

The conventional thermostat must be configured for use with a single stage air conditioner (Y output ONLY) and a single stage heating (W) system.

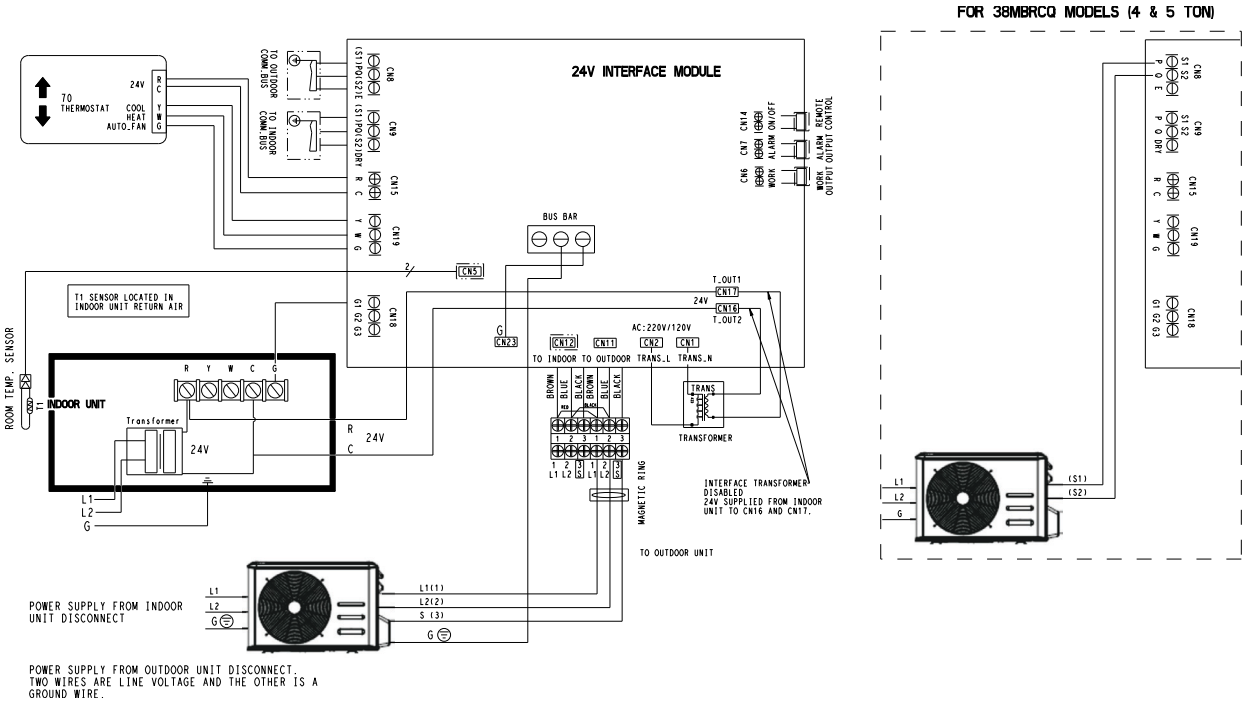

Fig. 12 — Wiring Diagram for Conventional 24V Fan Coil Indoor Unit

SCENARIO 5: SINGLE ZONE OUTDOOR UNIT 38MARB and 38MBRC (4 AND 5 TON ONLY) WITH APPROVED 24V FAN COILS FV4

Installation Steps:

1. Remove TXV on the indoor unit.
2. Run the interconnecting piping from the outdoor unit to the indoor unit using the outdoor piping size and brazing to the mechanical fitting adapter that replaces the TXV (**part number 40MD000003**) (available through RCD). If required, use the Bushing/Reducers listed in "APPENDIX 1 - PIPING ADAPTER BUSHINGS/REDUCERS" on page 16.
3. Suction and liquid refrigerant lines must be properly insulated and separated from each other to prevent condensation and energy loss.
4. Disconnect and remove the 24 volt transformer from the 24 Volt Interface. Run the 2-conductor 18 AWG cable from R and C of the indoor unit terminal board. Connect "R" to CN17 and "C" to CN16 on the 24 Volt Interface. Be sure to connect the primary (high voltage) wire to the correct terminal (tap) on the FV4C transformer (see "APPENDIX 2 - FV4C TRANSFORMER" on page 16).
5. Run the interconnecting wiring (14-3 AWG stranded power cable with ground and 600 volt insulation rating) from the outdoor unit to the 24 Volt Interface using terminal connections L1(1), L2(2) and G. For 38MARB models, S(3) needs to be connected to CN11 next to terminals L1(1) and L2(2). For 38MBRC models, connect the wiring for the S1 and S2 outdoor interface to CN8 instead, S1 connects to P (top terminal) and S2 connects to Q (middle terminal) . Connect the ground wire (G) to the ground BUS BAR, CN23. Separate power supplies are required for the outdoor unit and the indoor unit.
6. Run the 18 AWG thermostat wiring from the thermostat terminals to the 24 Volt Interface and connect to R and C on CN15. Also connect Y, W, and G on CN19.

   NOTE: Use an instrument size flat blade screwdriver with a maximum blade width of 1/8" for the screw terminals.
7. Run the 18 AWG thermostat wiring from "G1" on CN18 of the 24 Volt Interface to "G" on the indoor unit terminal board.
8. Install the T1 sensor (included with 24 Volt Interface) on CN5 of the 24 Volt Interface and locate according to the **NOTE** addressing the indoor and outdoor unit's general installation in the next column.
9. Configure the dip switches on the 24V Interface for proper operation:
   For Heat Pump – all switches OFF except SW1-1 = ON
   For Cooling Only – all switches OFF except SW1-1 = ON and SW2-1 = ON.
10. Configure the fan coil "Easy Select" Printed-Circuit Board following the instructions on the indoor unit's installation manual.
11. Configure the thermostat to operate as a single stage cooling and heating (**DO NOT** configure the thermostat as a Heat Pump).

NOTE: Follow the indoor and outdoor unit's general installation instructions. The T1 (Return Air Temperature) sensor should be near or on the indoor unit on the air inlet side. The thermistor should be installed pointing down into the duct between 2.5 ft (0.75 m) and 4 ft (1.2 m) from the return side of the fan coil. Use a ½" drill and insert the thermistor no less than 6 in (15 cm) into the duct and seal air tight around the cable.

Auxiliary Heater on an FV4C:

Refer to and follow the steps of the FV4C Fan Coil Installation Instructions manual:

1. Wire W2 from the thermostat directly to the FV4 fan coil.

Do not remove the jumper on the fan coil between W1 and W2

2. Re-configure the wall thermostat to control the electric heat as a 2nd stage heat W2.
3. Use the FV4 standard molex 12-pin connector to connect the Auxiliary Electric Heater element.

NOTE: When an auxiliary electric heater is connected and active by W2 from the thermostat, the fan coil keeps blowing air regardless if the outdoor unit is operating under **DEFROST** mode.

⚠ CAUTION

When the outdoor unit is matched with a Residential fan coil and brazing the piping on the fan coil side is required, it is **NECCESSARY** to flow nitrogen into the system while brazing the line set since a filter drier is not recommended for use with these condensing units.

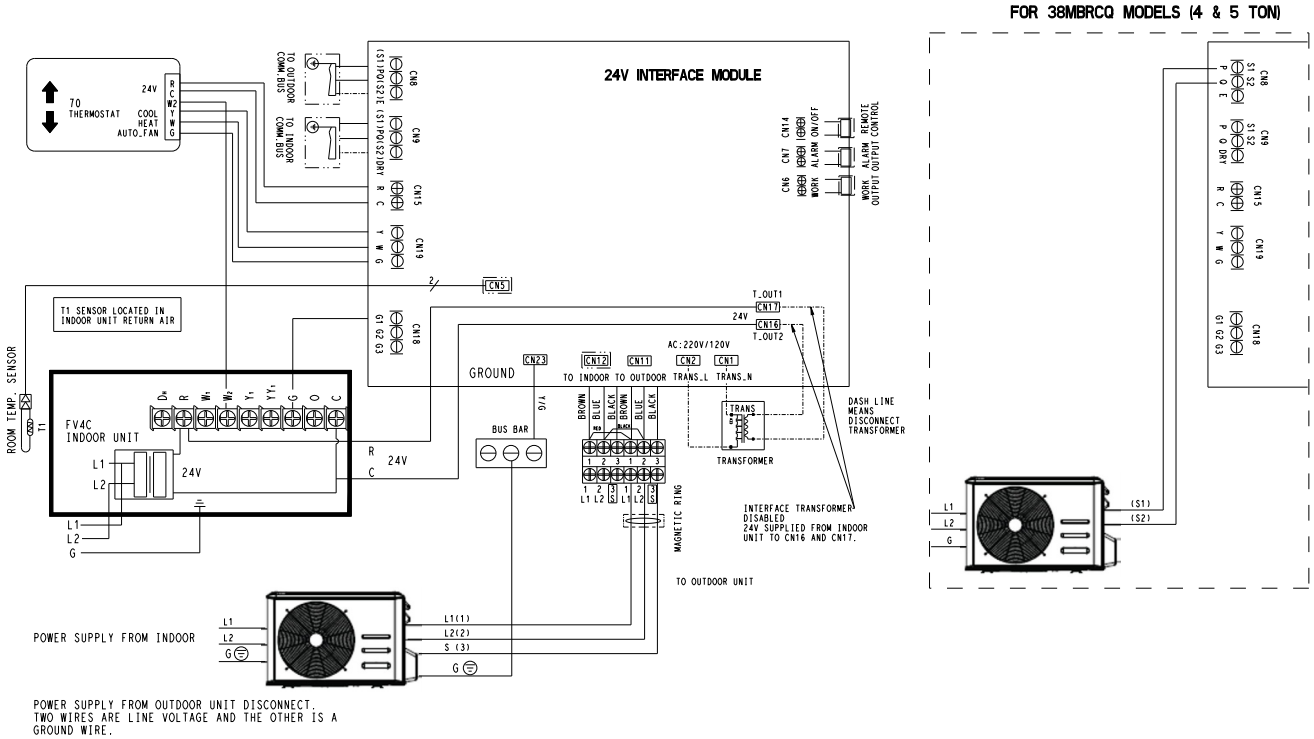

Fig. 13 — Wiring Diagram for FV4C Fan Coil Unit

TXV REPLACEMENT PROCESS FOR PIPING ADAPTER FOR CAP**/CNPV* SERIES EVAPORATOR COILS

1. Gain access to the built-in TXV inside the fan coil cabinet.
2. Double-wrench the TXV mechanical connector and disassemble.
3. Cut the bleed line from the TXV to the suction line and braze closed the equalizer.

NOTE: If the factory txv has a mechanical equalizer fitting, cap off with a field supplied sealed brass cap.

4. Remove the tail bulb from the suction line by cutting the stainless steel band.
5. Assemble the line set to the piping adapter kit (40MD000003). Obtain through RCD.
   a. Refer to “APPENDIX 1 - PIPING ADAPTER BUSHINGS/ REDUCERS” on page 16 for Bushing/Reducer sizing.
   b. Adapt (where needed) and braze the liquid line to the piping adapter.
6. Place the Teflon gasket on the brass tip of the Piping Adapter and insert into the aluminum distributor head.

Thread the piping adapter brass nut onto the distributor line and tighten - finger tight + 1/2 turn.

Fig. 14 — Piping Adapter Replacement

BASIC SETUP FOR THE FV4C “EASY SELECT” PRINTED-CIRCUIT BOARD

BASIC FAN COIL CONFIGURATION

The following basic fan coil configuration provides AHRI rated performance of the heat pump:

A. AUX HEAT KW/CFM –
   Select the heater range for the size electric heater installed.
B. AC/HP SIZE –
   Select system size installed
   For size 12K, select 018 on the board.
   For sizes 18K - 36 K, select the nominal connector on the board.
C. SYSTEM TYPE -
   Select system type
D. AC/HP CFM ADJUST –
   Select NOM
E. ON/OFF DELAY –
   Select 0/90 profile
F. CONTINUOUS FAN –
   Select the desired fan speed when the thermostat is set to continuous fan.
   For size 12K, select “MED”

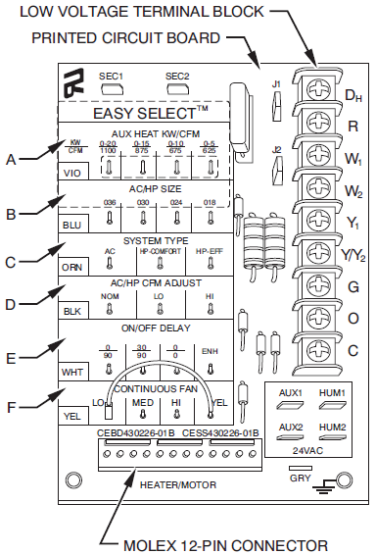

Fig. 15 — Detail of FV4C Printed-Circuit Board

SCENARIO 6: SINGLE ZONE OUTDOOR UNIT 38MARB and 38MBRC (4 and 5 TON ONLY) WITH APPROVED FURNACES

Single Zone outdoor unit 38MARB with approved furnaces.

NOTE: A traditional heat pump thermostat is configured for Dual Fuel operation is required in conjunction with a relay as shown in Figure 16. For relay specifications, "APPENDIX 5 - FURNACE RELAY FOR FURNACE OPERATION" on page 18.

Installation Steps:

1. Remove TXV on the cased coil.
2. Run interconnecting piping from outdoor to cased coil using Outdoor piping size and brazing to the mechanical fitting adapter that replaces the TXV (part number 331831-701 or 40MD000003) (available through RCD).
3. Suction and liquid refrigerant lines must be properly insulated and separated from each other to prevent condensation and energy loss
4. Disconnect and remove the 24 volt transformer from the 24 Volt Interface. Run 2-conductor 18 AWG cable from R and C of the indoor unit terminal board. Connect "R" to CN17 and "C" to CN16 on the 24 Volt Interface.
5. Run the interconnecting wiring (14-3 AWG stranded power cable with ground and 600 volt insulation rating) from the outdoor unit to the 24 Volt Interface using terminal connections L1(1), L2(2) and G. For 38MARB models, S(3) needs to be connected to CN11 next to terminals L1(1) and L2(2). For 38MBRC models, connect the wiring for the S1 and S2 outdoor interface to CN8 instead, S1 connects to P (top terminal) and S2 connects to Q (middle terminal) . Connect the ground wire (G) to the ground BUS BAR, CN23. Separate power supplies are required for the outdoor unit and the indoor unit.
6. Run 18 AWG thermostat wiring from heat-pump thermostat terminals to the 24Volt Interface and connect to R and C on CN15, connect Y and O from the thermostat to C and O (+) on the relay respectively; connect NO to Y, NC to W and G on CN19; connect (-) Com to C on CN15. NOTE: Use an instrument size flat blade screwdriver with a maximum blade width of 1/8" for the screw terminals.
7. Run 18 AWG thermostat wiring from heat-pump thermostat "W" terminals DIRECTLY to the furnace "W" terminals depending on the number of heating stages.
8. Run 18 AWG thermostat wiring from "G1" on CN18 of the 24Volt Interface to "Y" or "Y/Y2" on the furnace terminal board.
9. Install the T1 sensor (included with 24 Volt Interface) to the whip that is connected to CN5 of the 24 Volt Interface and locate according to the **NOTE**, below.
10. Configure the dip switches on the 24 Volt Interface for proper operation: For Heat Pump - all switches OFF except SW1-1 = ON For Cooling Only - all switches OFF except SW1-1 = ON and SW2-1 = ON.

NOTES: A WI-FI connected thermostat that detects outdoor temperature is recommended. Otherwise, thermostat must support a physical temperature sensor properly located to sense outdoor ambient conditions.

NOTES: Follow the Indoor and Outdoor unit's general installation instructions. The T1 (Return Air Temperature) sensor should be near or on the indoor unit on the air inlet side. The thermistor should be installed pointing down into the duct between 2.5 ft (0.75 m) and 4 ft (1.2 m) from the return side of the fan coil. Use a ½" drill and insert the thermistor no less than 6 in (15 cm) into the duct and seal air tight around the cable.

COOLING ONLY APPLICATIONS:

If the heat pump is to be operated in **COOLING ONLY** mode, a field supplied relay is not needed and the O terminal on the heat-pump thermostat will not be used.

CAUTION

When the outdoor unit is matched with a conventional fan coil and brazing the piping on the fan coil is required, it is NECCESSARY to flow nitrogen into the system while brazing the line set since a filter drier is not recommended for use with these condensing units.

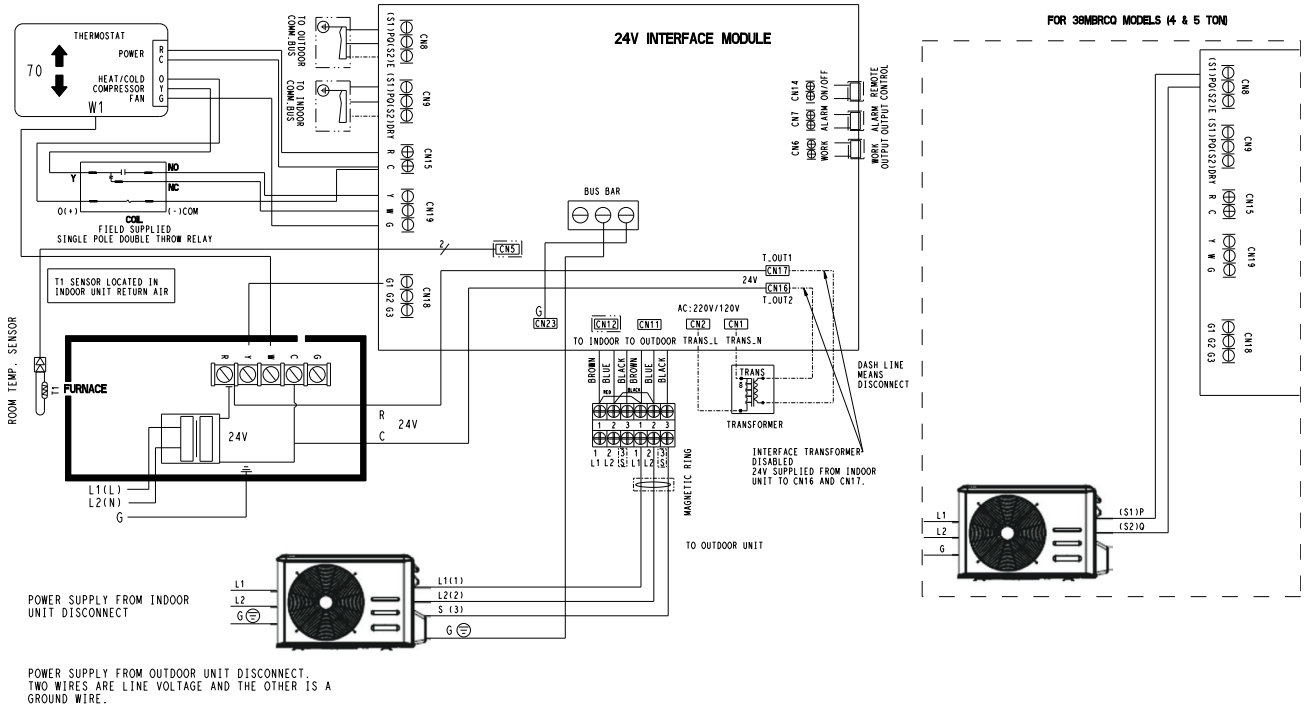

Fig. 16 — Wiring Diagram for Single Zone 38MARB Unit

WIRING

All wires must be sized per NEC (National Electrical Code) or CEC (Canadian Electrical Code) and local codes. Use the Electrical Data table MCA (minimum circuit amps) and MOCP (maximum over current protection) to correctly size the wires and the disconnect fuse or breakers respectively. Consult the unit's installation instructions for the Electrical Data tables.

For scenarios 1, 2 and 3 Ductless Systems - The main power is supplied to the outdoor unit; the indoor unit is powered by the 24V interface.

For scenarios 4 and 5 Conventional Fan Coils - Separate power supplies are required for the outdoor unit and the indoor unit.

For condensing units with a L1(1), L2(2) and S power and communication wiring - The field supplied 14/3 stranded wire with ground and a 600 volt insulation rating, power/communication wiring from the outdoor unit to the 24V Interface Kit, consists of four (4) wires and provides the power for the 24V Interface. Two wires are line voltage AC power, one is communication wiring (S) and the other is a ground wire.

For condensing units with a L1(1), L2(2) power and S1, S2 communication wiring, the field supplied power wiring 14/2 from the outdoor unit to the 24V interface consists of three (3) wires and provides the power for the indoor unit. Two wires are high voltage AC power and one is a ground wire. To minimize voltage drop, the factory recommended wire size is 14/2 stranded with a ground.

A separate shielded 16GA stranded control wire copper conductor only, with a 600 volt rating and double insulated copper wire, must be used as the communication wire from the outdoor unit to the 24V interface and the indoor unit. Wiring between the outdoor unit to 24V Interface Kit is polarity sensitive. The use of the BX wire is **NOT** recommended.

⚠ CAUTION

The conventional thermostat must be configured for use with a single stage air conditioner (Y output **ONLY**) and a single stage heating (W) system.

Key Considerations When Using a Conventional Fan Coil or Furnace

The following steps should be taken when using this device with a conventional fan coil unit (see "SCENARIO 4: SINGLE ZONE OUTDOOR UNIT 38MARB and 38MBRC (4 & 5 TON ONLY) WITH APPROVED MULTI-FAMILY 24V FAN COILS FMA/FX4D/FB4C/FMC/FMU" on page 8 and "SCENARIO 5: SINGLE ZONE OUTDOOR UNIT 38MARB and 38MBRC (4 AND 5 TON ONLY) WITH APPROVED 24V FAN COILS FV4" on page 9 and "APPENDIX 5 - FURNACE RELAY FOR FURNACE OPERATION" on page 18):

1. Indoor coil metering device (TXV/Piston) must be removed
2. The 24V transformer in the interface module must be disconnected
3. The refrigerant charge amount may need adjusting, depending on the pipe size and length. Refer to the outdoor unit's installation manual.
4. The maximum airflow should not exceed 400 CFM/Ton.

When the indoor fan coil has its own 24V AC transformer, all four wires of the 24V Interface kit transformer must be disconnected (see Fig. 18).

The suction and liquid refrigerant lines must be properly insulated to prevent condensation and energy loss.

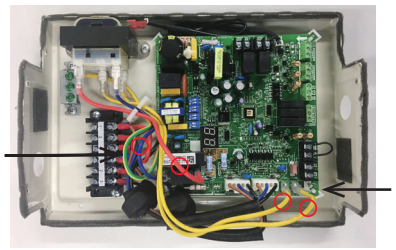

Fig. 17 — Wiring

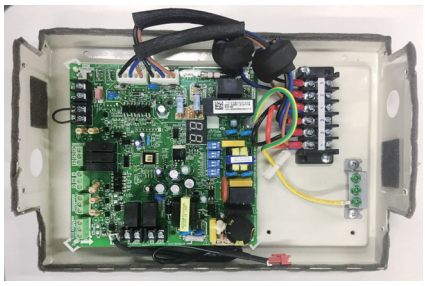

Fig. 18 — Wiring

Control Logic

Table 5 — Conventional Thermostat Connections

Connector	Purpose
R/C	24VAC Output
Y	Cooling
W	Heating
G	Fan
AUX/DRY	Aux/Dry Mode

Table 6 — Mode Setting

Y	W	G	Aux/Dry	Setting Mode
√	X	☆	☆	Cooling
X	√	☆	X	Heating (without aux-heater)
X	√	☆	√	Heating (with aux-heater)
X	X	√	X	Fan only
√	√	☆	☆	OFF
X	X	X	X	OFF
X	X	☆	√(DRY)	DRY (on Ductless systems)
X	X	☆	√(AUX)	Emergency Heating

FAN SPEED

For applications where multiple speeds are needed, the fan outputs are G1(Low), G1+G2(Medium) and G1+G2+G3(High) and must be connected by running thermostat wiring from the 24V interface to the indoor unit using output connections G1, G1+G2, G1+G2+G3 as shown in Figure 19. Fan motor connections must be made according to the fan coil installation manual.

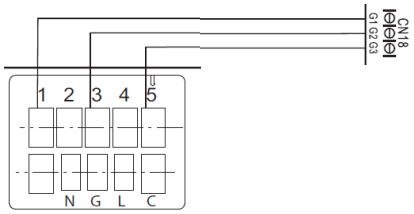

Fig. 19 — G Connections

Use the selection options provided to adjust the airflow supplied to meet the individual installation needs for such things as noise, comfort, and humidity removal.

Table 7 — Fan Speed Setting

Unit ON/OFF	G	Setting Fan Speed
√	X	Auto Fan Speed
√	√	Auto Fan Speed
X	X	Fan OFF

LEGEND

√	**ON**
X	**OFF**
☆	**ON or OFF**

DIP SWITCHES CONFIGURATION

The **24V INTERFACE KIT** must be configured to operate properly with the system components with which it is installed. To successfully configure the system, adjust the DIP Switches to match the components and functions used.

NOTE: Properly identify the DIP Switch number marked on the board of the 24V interface as SW1 through SW4 before selecting the options. On each DIP Switch block, the numbers 1 and 2 are marked.

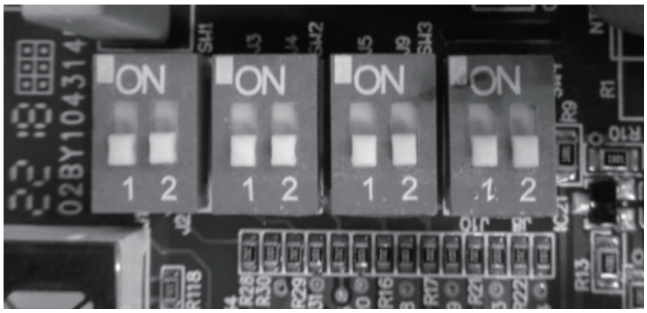

Fig. 19 — DIP Switch Definitions

DIP Switch 1-1

Used to turn **ON** or **OFF** the diagnostic code display LED on the 24V Interface control board (see Fig. 20).

Table 8 — DIP Switch 1-1

SW1-1	Result	Note
ON	Display on	
OFF	Display off	Default

Fig. 20 —LED

DIP Switch 1-2

Use for the indoor unit type selection.

Table 9 — DIP Switch 1-2

SW1-2	Result	Note
ON	Sets - Both Ductless Indoor and Outdoor Units (For Scenarios 1-3)	
OFF	Outdoor only (Hybrid Solution) -Scenarios 4, 5, 6 ----- Compatible with other 24V indoor units Fan Coil/Furnace/Cased Coil	Default (see **NOTES*** below)

NOTES*:

1. **Need to remove the indoor unit throttle (piston/TXV/ orifice);**
2. **The indoor fan stops during the DEFROST mode and starts again 30 seconds after the defrost cycle is complete on the outdoor unit. G1, G2 and G3 on the 24V interface will not provide any fan output signal to the indoor fan during the DEFROST cycle plus 30 seconds.**

NOTE: If this 24V interface is matched with a non-ductless indoor unit, the DIP Switch must be set to **OFF**.

DIP Switch 2-1

Use for selection of the system: **Cooling Only** or **Heat Pump.**

Table 10 — DIP Switch 2-1

SW2-1	Result	Note
ON	Cooling Only	
OFF	Heat Pump	Default

DIP Switch 2-2

Use for freeze protection of the indoor coil (scenarios 1 through 3 **only**).

Table 11 — DIP Switch 2-2

SW2-2	Result	Note
ON	Fan does not stop	
OFF	Fan stops if the indoor coil temperature is low	Default

NOTE: Applicable only to the Ductless Style Indoor Heat Pump units in the HEATING mode.

DIP Switch 3-1

On Ductless systems, **Dry** is used with thermostats with a **Dry Function** output.

Table 12 — DIP Switch 3-1

SW3-1	Result	Note
ON	Dry Mode	
OFF	Used on future applications	Default

DIP Switch 3-2

Use to increase the compressor frequency in case the set point has not been reached after 1 hour or half hour of operation. The unit keeps operating at **Variable Speed** in both instances.

Table 13 — DIP Switch 3-2

SW3-2	Result	Note
ON	1h	
OFF	0.5h	Default

DIP Switch 4-1

Not required (planned for future applications). Select the indoor unit's **FAN ONLY** mode.

Table 14 — DIP Switch 4-1

SW4-1	Result	Note
ON	The SW4-2 is available under fan only mode	
OFF	The SW1-2 is available	Default

DIP Switch 4-2

Not required (planned for future applications). Select the indoor unit's fan speed (when selecting DIP switch 4-1).

Table 15 — DIP Switch 4-2

SW4-2	Result	Note
ON	Medium fan speed	
OFF	High fan speed	Default

NOTE: If the SW4-1 is ON, the SW4-2 takes effect, otherwise the SW1-2 takes effect**.**

ERROR CODES

For ease of service, the 24V Interface is equipped with a diagnostic code display LED on the control board (ensure the 24V interface is installed with the directional arrow pointing up to successfully read the error code). Refer to the indoor or outdoor unit's service manual as listed in Table 16 for a troubleshooting breakdown.

Table 16 — Error Codes

Display	Malfunction and Protection Indication	Service Manual Reference
E0	Indoor EEPROM error	Indoor Service Manual
E2	Cross-zero detection error	Indoor or Outdoor Service Manual
E3	Indoor fan speed malfunction	Indoor Service Manual
E4	Indoor room temperature sensor error	Indoor Service Manual
E5	Evaporator coil temperature sensor error	Indoor Service Manual
EC	Refrigerant leak detection system malfunction	Indoor or Outdoor Service Manual
F0	Current overload protection	Outdoor Service Manual
F1	Outdoor ambient temperature sensor (T4) malfunction	Outdoor Service Manual
F2	Condenser coil temperature sensor (T3) malfunction	Outdoor Service Manual
F3	Condenser coil temperature sensor (T5) malfunction	Outdoor Service Manual
F4	Outdoor unit EEPROM parameter error	Outdoor Service Manual
F5	Outdoor fan speed has been out of control	Outdoor Service Manual
F6	T2b sensor error	Indoor or Outdoor Service Manual
P0	Inverter module (IPM) malfunction	Outdoor Service Manual
P1	Over-voltage or under-voltage protection	Outdoor Service Manual
P2	Compressor top high temperature protection (OLP)	Outdoor Service Manual
P3	Low ambient temperature cut off in heating	Outdoor Service Manual
P4	Compressor drive malfunction	Outdoor Service Manual
--	Mode conflict (when connected to a multi-zone)	Indoor Service Manual
P6	Compressor low-pressure protection	Outdoor Service Manual
IN	24V Interface and indoor unit communication malfunction	Indoor Service Manual (E1)
0U	24V Interface (indoor unit) and outdoor unit communication malfunction	Indoor Service Manual (E1)
00	24V Interface successful power up and in standby	Operational Code
01	System operating in cooling mode	Operational Code
02	System operating in heating mode	Operational Code
03	System operating in fan mode	Operational Code
04	System operating in dehumidify mode (not a recommended application for FV4C units)	Operational Code
05	System operating with Auxiliary heater active (not a recommended application)	Operational Code

Manufacturer reserves the right to change, at any time, specifications and designs without notice and without obligations.

WIRING DIAGRAM

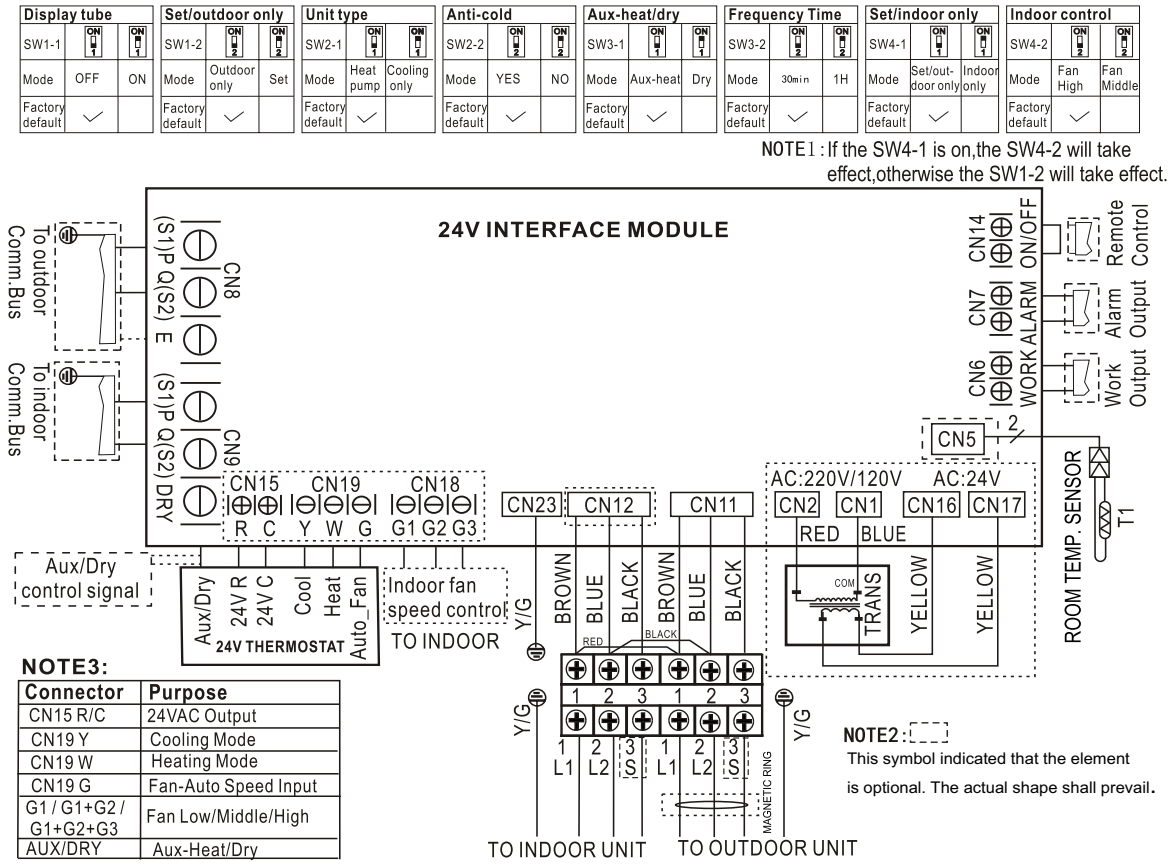

Fig. 21 — Wiring Diagram

GLOSSARY:

- **Remote Control (CN14):** This input may be used to turn the indoor unit on and off remotely by switch or dry contact. If not used, the terminals must have a jumper in place for the unit to operate.
- **Alarm Output (CN7):** This is a dry contact that opens and closes based on the system's alarm status. This is normally an open dry contact.
- **Work Output (CN6):** This contact is a dry contact that opens and closes based on the system's running or not running condition.When the thermostat calls for Cool (Y), Heat (W), or Fan (G), the contact closes.

FAN OUTPUTS:

- **(G1) Low Fan Speed**
- **(G1 + G2) Medium Fan Speed**
- **(G1+ G2 + G3) High Fan Speed**

NOTE: For the single fan speed only, G1 has to be connected.

APPENDIX 1 - PIPING ADAPTER BUSHINGS/REDUCERS

Table 17 — Bushings and Reducers

MODEL	SIZE	BUSHINGS/REDUCERS REQUIRED (FIELD SUPPLIED)
FMA FMC	12-18	3/4” - 1/2” Suction
		3/8” - 1/4” Liquid
	24-36	3/4” - 5/8” Suction
		3/8” - 1/4” Liquid
FMU FV4	12-18	3/8” - 1/4” Liquid and 3/4” - 1/2” Suction
	24-36	3/4” - 5/8” Suction Only
	48-58	7/8” to 5/8” Suction Only
FX4D FB4C	12-24	5/8” - 1/2” Suction
		3/8” - 1/4” Liquid
	30-36	3/4” - 5/8” Suction Only
	48-58	7/8” to 5/8” Suction Only

A piping adapter kit 331831-701 (sold through RCD) is required when removing the factory supplied TXV on the indoor unit. The piping adapter kit for the FV4 is 40MD000003.

APPENDIX 2 - FV4C TRANSFORMER

This transformer is factory wired for 230V AC operation. For 208V AC applications, disconnect the black wire from the 230-V terminal on the transformer primary side and connect it to the 208V terminal (see Fig. 22).

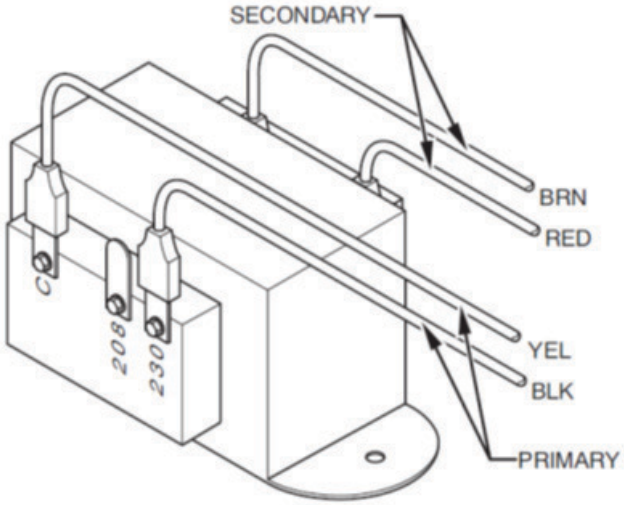

Fig. 22 — Transformer Connections on FV4C Fan Coils

APPENDIX 3 - ADDITIONAL REFRIGERANT CHARGE FOR CONVENTIONAL FAN COILS

When matching the FMA4 indoor units, the 12K units require 12.4oz. (350g) more refrigerant due to the indoor coil's size.

No refrigerant addition is necessary for the FV4 (any size).

All the outdoor units are shipped from the factory pre-charged for 25ft. of piping length. See the outdoor unit's installation instructions for additional charge requirements on longer piping lengths.

APPENDIX 4 - FV4C AIRFLOW DELIVERY

Table 18 — FV4C Fan Coil Airflow Delivery (CFM) in Heat Pump Only Heating Mode

OPERATING MODE					
UNIT SIZE	OUTDOOR UNIT CAPACITY	SINGLE SPEED APPLICATION	FAN ONLY		
		HEAT PUMP EFFICIENCY	LO	MED	HIGH
002	012 018 024	525 525 700	350 350 350	380 380 505	470 470 630
003	030 036	875 1050	415 470	630 755	785 945
005	048	1400	630	1010	1260
006	058	1750	785	1260	1575

NOTES:

1. The airflow numbers listed in Table 18 result from the AC, HP CFM ADJUST select jumper set to NOM.
2. Airflow can be adjusted +15% or -10% by selecting HI or LO respectively for all modes except **FAN ONLY**.
3. Dry coil at 230 volts and with 10KW heater and filter installed.
4. Airflows shown are represented in standard air conditions.

Manufacturer reserves the right to change, at any time, specifications and designs without notice and without obligations.

APPENDIX 5 - FURNACE RELAY FOR FURNACE OPERATION

Recommended Relay Type: Single Pole Single Throw Relay (SPDT) with continuous duty coil

Coil Voltage Input: 10-30 Vac/dc ; 120 Vac ; 50-60 Hz

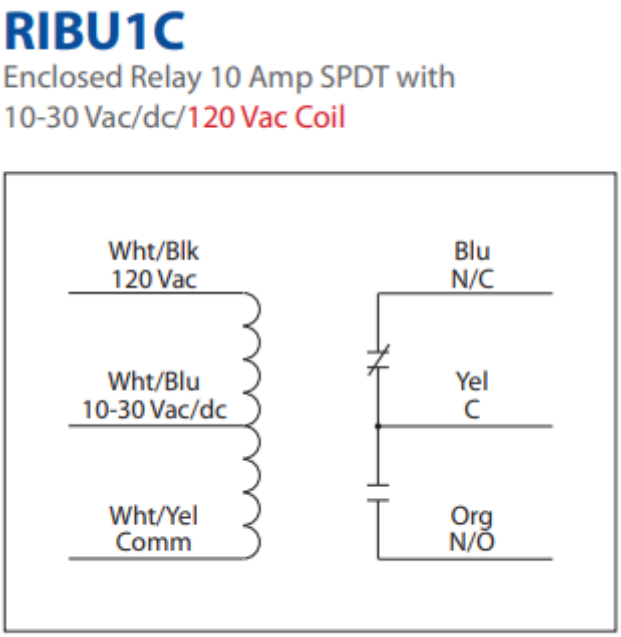

Fig. 23 —RIBU1C - Enclosed Relay

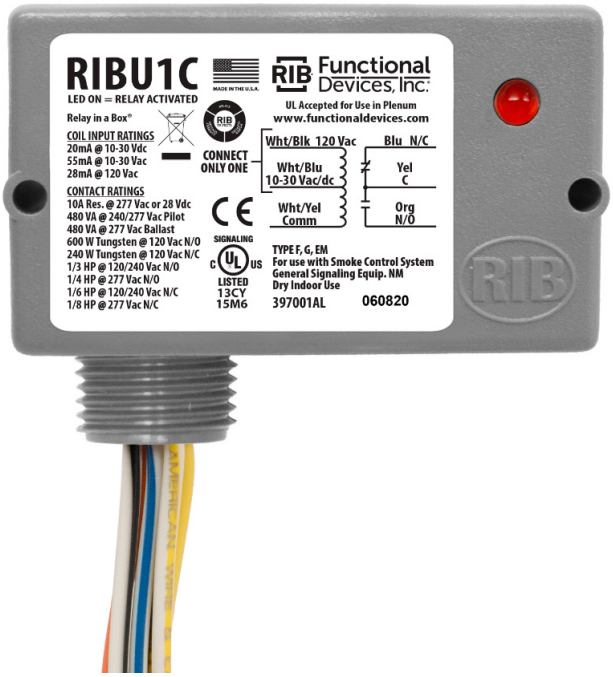

Fig. 24 — UL

© 2022 Carrier. All rights reserved.

Manufacturer reserves the right to change, at any time, specifications and designs without notice and without obligations.