# N5H5S
# Single-Stage Heat Pump with R-454B Refrigerant 1.5 To 5 Tons

HEATING & COOLING PRODUCTS

# Product Data

This unit has been designed utilizing non-ozone depleting and low global warming potential R-454B refrigerant. Heat pumps with R-454B refrigerant provide a collection of features unmatched by any other family of equipment.

## Industry leading Features / Benefits

### Efficiency

- 14.3 - 16.0 SEER2 / 10.0 - 12.5 EER2 / 7.5 - 7.8 HSPF2 (depending on unit size and indoor combination installed)
- Indoor air quality accessories available

### Comfort

- System supports programmable or standard thermostat controls

### Sound

- Sound levels as low as 68 dBA

### Reliability

- Non-ozone depleting and low global warming potential R-454B refrigerant
- Scroll compressor
- Internal pressure relief valve
- Internal thermal overload
- Loss of charge switch
- Filter drier
- Balanced refrigeration system for maximum reliability

### Durability

Protection Package:

- Solid, durable sheet metal construction
- Dense wire coil guard

### Applications

- Long line - up to 250 feet (76.20 m) total equivalent length, up to 200 feet (60.96 m) condenser above evaporator, or up to 80 ft. (24.38 m) evaporator above condenser (See Long Line Guide for more information.)
- Low ambient cooling (down to 0°F/-17.8°C) with approved low ambient accessory kits

### Limited Warranty

- 5-year parts limited warranty (including compressor and coil)
  10-year parts limited warranty (including compressor and coil) with timely registration*
  – Equipment must be registered within 90 days of original installation, except in jurisdictions where warranty benefits cannot be conditioned on registration.
  * Applies to original purchaser/homeowner and not available to subsequent owners except in jurisdictions where applicable laws dictate otherwise.

**See warranty certificate for complete details and restrictions.**

## MODEL NUMBER NOMENCLATURE

| N | 5 | H | 5 | S | 18 | A | K | A | A | A |
|---|---|---|---|---|---|---|---|---|---|---|
| **Brand**<br>**N = Heil** | **Refrigerant**<br>**5** = R-454B | **Type**<br>**H** = HP | **SEER2**<br>**5**= 14.3 SEER2 | **OD Design Type**<br>**S**= Single Stage | **Nominal Capacity**<br>**18** = 1-1/2 Tons<br>**24** = 2 Tons<br>**30** = 2-1/2 Tons<br>**36** = 3 Tons<br>**42** = 3-1//2 Tons<br>**48** = 4 Tons<br>**60** = 5 Tons | **Feature**<br>**A** = Standard | **Voltage**<br>**K** = 208-230-1<br>**H** = 208/230-3<br>**L** = 460-3 | **Special Feature**<br>**A** = Standard<br>**B =** Compressor Electrical Rating Change<br>**D** = Coil optimization | **Region**<br>**A** = Standard HP | **Major Series**<br>**A** = Initial |

Use of the AHRI Certified TM Mark indicates a manufacturer's participation in the program For verification of certification for individual products, go to www.ahridirectory.org.

C US

This product has been designed and manufactured to meet Energy Star Criteria for energy efficiency when matched with appropriate coil components. However, proper refrigerant charge and proper air flow are critical to achieve rated capacity and efficiency. Installation of this product should follow all manufacturing refrigerant charging and air flow instructions. **Failure to confirm proper charge and air flow may reduce energy efficiency and shorten equipment life.**

## Tested AHRI Combination Ratings

**NOTE**: Ratings contained in this document are subject to change at any time.

For AHRI ratings certificates, please refer to the AHRI directory www.ahridirectory.org

Additional ratings and system combinations can be accessed via the Ratings Database here: Heil Ratings

## CATALOG ORDERING NUMBERS

| Size | Model Number |
|---|---|
| **18** | N5H5S18AKAAA |
| **24** | N5H5S24AKAAA |
| **30** | N5H5S30AKAAA |
| **36** | N5H5S36AKAAA<br>N5H5S36AHAAA<br>N5H5S36ALAAA |
| **42** | N5H5S42AKAAA |
| **48** | N5H5S48AKBAA<br>N5H5S48AHAAA<br>N5H5S48ALAAA |
| **60** | N5H5S60AKAAA<br>N5H5S60AHAAA<br>N5H5S60ALAAA |

## Standard Features

| Feature | 18 | 24 | 30 | 36 | 42 | 48 | 60 |
|---|---|---|---|---|---|---|---|
| R-454B Refrigerant | X | X | X | X | X | X | X |
| Scroll Compressor | X | X | X | X | X | X | X |
| Field Installed Filter Drier | X | X | X | X | X | X | X |
| Front Seating Service Valves | X | X | X | X | X | X | X |
| Internal Pressure Relief Valve | X | X | X | X | X | X | X |
| Internal Thermal Overload | X | X | X | X | X | X | X |
| Long Line capability | X | X | X | X | X | X | X |
| Low Ambient capability with Kit | X | X | X | X | X | X | X |
| Suction Line Accumulator | X | X | X | X | X | X | X |
| Loss of Charge Switch | X | X | X | X | X | X | X |
| Field Installed Liquid Line Solenoid Valve | | | | | | | |

# Physical Data

| UNIT SIZE | 18 | 24 | 30 | 36 | 42 | 48 | 60 |
|---|---|---|---|---|---|---|---|
| **Compressor Type** | Scroll | | | | | | |
| **REFRIGERANT** | R-454B | | | | | | |
| Factory Charge lb (kg)* | 6.5(2.95) | 5.4(2.45) | 6.1(2.77) | 7.6(3.45) | 7.3(3.31) | 10.5(4.76) | 8.7(3.95) |
| Outdoor Heating Piston # | 42 | 46 | 52 | 52 | 61 | 65 | 70 |
| **COND FAN** | Forward Swept or Propeller Type, Direct Drive | | | | | | |
| Air Discharge | Vertical | | | | | | |
| Air Qty (CFM) | 1900 | 3500 | 3000 | 3500 | 3000 | 3800 | 4300 |
| Motor HP | 1/12 | 1/10 | 1/10 | 1/4 | 1/5 | 1/4 | 1/4 |
| Motor RPM | 800 | 825 | 825 | 825 | 1100 | 1110 | 800 |
| **COND COIL** | | | | | | | |
| Face Area (Sq ft) | 17.2 | 19.3 | 21.4 | 17.2 | 17.2 | 21.4 | 22.6 |
| Fins per In. | 20 | 20 | 20 | 20 | 20 | 20 | 20 |
| Rows | 1 | 1 | 1 | 2 | 2 | 2 | 2 |
| Circuits | 7 | 6 | 7 | 8 | 10 | 12 | 12 |
| **VALVE CONNECT. (In. ID)** | | | | | | | |
| Vapor | 3/4 | 3/4 | 3/4 | 3/4 | 7/8 | 7/8 | 7/8 |
| Liquid | 3/8" | | | | | | |
| **REFRIGERANT TUBES* (In. OD)** | | | | | | | |
| Rated Vapor† | 5/8 | 5/8 | 3/4 | 3/4 | 7/8 | 7/8 | 1 1/8 |
| Rated Liquid Line‡ | 3/8" | | | | | | |

*. For 15 ft. lineset
†. Units are rated with 25 ft (7.6 m) of lineset length. See Vapor Line Sizing and Cooling Capacity Loss table when using other sizes and lengths of lineset.
‡. See Liquid Line Sizing For Cooling Only Systems with R-454B Refrigerant tables.
Note: See unit Installation Instructions for proper installation

**Manufacturer reserves the right to change, at any time, specifications and designs without notice and without obligations.**

## Vapor Line Sizing and Cooling Capacity Loss

Acceptable vapor line diameters provide adequate oil return to the compressor while avoiding excessive capacity loss. The suction line diameters shown in the chart below are acceptable for HP systems with R-454B refrigerant:

**Table 1 – Vapor Line Sizing and Cooling Capacity Losses - Puron Advance™ Refrigerant 1-Stage Heat Pump Applications**

| Unit Nominal Size (kBtuh) | Maximum Liquid Line Diameters (In. OD) | Acceptable Vapor Line Diameters (In. OD) | Cooling Capacity Loss (%) Total Equivalent Line Length ft. 1-Stage HP with Puron Advance™ Refrigerant | | | | | | | | |
|---|---|---|---|---|---|---|---|---|---|---|---|
| | | | Total Equivalent Line Length (ft) | | | | | | | | |
| | | | Standard Application | | Long Line Application Requires Accessories | | | | | | |
| | | | 26-50 | 51-80 | 81-100 | 101-125 | 126-150 | 151-175 | 176-200 | 201-225 | 226-250 |
| 18 | 3/8 | 1/2 | 2 | 5 | 6 | 8 | 10 | 12 | 13 | 15 | 16 |
| | | 5/8 | 1 | 2 | 3 | 4 | 4 | 5 | 6 | 7 | 7 |
| 24 | 3/8 | 5/8 | 1 | 3 | 4 | 5 | 6 | 7 | 8 | 9 | 10 |
| | | 3/4 | 1 | 1 | 2 | 3 | 3 | 4 | 4 | 5 | 5 |
| 30 | 3/8 | 5/8 | 2 | 4 | 5 | 6 | 8 | 9 | 10 | 11 | 13 |
| | | 3/4 | 1 | 2 | 2 | 3 | 4 | 4 | 5 | 6 | 6 |
| | | 7/8 | 1 | 1 | 2 | 2 | 2 | 3 | 3 | 4 | 4 |
| 36 | 3/8 | 5/8 | 2 | 4 | 6 | 7 | 9 | 10 | 12 | 13 | 14 |
| | | 3/4 | 1 | 2 | 3 | 3 | 4 | 5 | 6 | 6 | 7 |
| | | 7/8 | 1 | 1 | 2 | 2 | 3 | 3 | 4 | 4 | 5 |
| 42 | 3/8 | 3/4 | 1 | 3 | 3 | 4 | 5 | 6 | 7 | 8 | 9 |
| | | 7/8 | 1 | 2 | 2 | 3 | 3 | 4 | 4 | 5 | 6 |
| 48 | 3/8 | 3/4 | 1 | 3 | 4 | 5 | 6 | 8 | 9 | 10 | 11 |
| | | 7/8 | 1 | 2 | 2 | 3 | 4 | 4 | 5 | 6 | 6 |
| 60 | 3/8 | 3/4 | 2 | 4 | 5 | 7 | 8 | 10 | 11 | 12 | 14 |
| | | 7/8 | 1 | 2 | 3 | 4 | 5 | 6 | 6 | 7 | 8 |
| | | 1 1/8 | 0 | 0 | 0 | 1 | 1 | 1 | 2 | 2 | 3 |
| Applications in this area are long Line. Accessories are required as shown in Accessory Usage Guideline Table | | | | | | | | | | | |

# Refrigerant Piping Length Limitations

## Maximum Line Lengths:

The maximum allowable total equivalent length for heat pumps varies depending on the vertical separation. See the tables below for allowable lengths depending on whether the outdoor unit is on the same level, above or below the outdoor unit.

**Maximum Line Lengths for Heat Pump Applications**

| | MAXIMUM ACTUAL LENGTH* ft (m) | MAXIMUM EQUIVALENT LENGTH ft (m) | MAXIMUM VERTICAL SEPARATION ft (m) |
|---|---|---|---|
| Units on equal level | 200 (61) | 250 (76.2) | N/A |
| Outdoor unit ABOVE indoor unit | 200 (61) | 250 (76.2) | 200 (61) |
| Outdoor unit BELOW indoor unit | See Table 'Maximum Total Equivalent Length: Outdoor Unit BELOW Indoor Unit' | | |

*.* Maximum actual length not to exceed 200 ft (61 m)

**Maximum Total Equivalent Length* - Outdoor Unit BELOW Indoor Unit**

| Size | Liquid Line Diameter w/ TXV | HP with R-454B Refrigerant - Maximum Total Equivalent Length Vertical Separation ft (m) Outdoor unit BELOW indoor unit; | | | | | | |
|---|---|---|---|---|---|---|---|---|
| | | 0-20 (0 - 6.1) | 21-30 (6.4 - 9.1) | 31-40 (9.4 - 12.2) | 41-50 (12.5 - 15.2) | 51-60 (15.5 - 18.3) | 61-70 (18.6 - 21.3) | 71-80 (21.6 - 24.4) |
| 18,000 | 3/8 | 250* | 250* | 250* | 250* | 250* | 250* | 250* |
| 24,000 | 3/8 | 250* | 250* | 250* | 250* | 250* | 250* | 250* |
| 30,000 | 3/8 | 250* | 250* | 250* | 250* | 250* | 250* | 250* |
| 36,000 | 3/8 | 250* | 250* | 250* | 250* | 250* | 250* | 250* |
| 42,000 | 3/8 | 250* | 250* | 250* | 250* | 250* | 250* | 150 |
| 48,000 | 3/8 | 250* | 250* | 250* | 250* | 230 | 160 | — |
| 60,000 | 3/8 | 250* | 225* | 190 | 150 | 110 | — | — |

*.Total equivalent length accounts for losses due to elbows or fitting. See the Long Line Guideline for details.
— = outside acceptable range

# Long Line Applications

An application is considered Long Line when the refrigerant level in the system requires the use of accessories to maintain acceptable refrigerant management for systems reliability. Defining a system as long line depends on the liquid line diameter, actual length of the tubing, and vertical separation between the indoor and outdoor units.

For Heat Pump systems, any application using a 3/8" liquid line with equivalent length greater than 80ft (24.4m) is considered long line.

## Accessories

| KIT NUMBER | KIT NAME | 18 | 24 | 30 | 36 | 42 | 48 | 60 |
|---|---|---|---|---|---|---|---|---|
| NASA00201FS | Evaporator Freeze Stat | X | X | X | X | X | X | X |
| NASA001TD | Time Delay Relay(90 sec. TDR) | X | X | X | X | X | X | X |
| NASA00201TD | Time Delay Relay(30 sec. TDR) | X | X | X | X | X | X | X |
| NASA401LA | Low Ambient Cooling Pressure Switch | X | X | X | X | X | X | X |
| NASA012SC | Hard Start Kit (not used on 3-phase models) | X | X | X | X | X | X | X |
| NASA014SC* | Hard Start Kit | | | | | X | X | X |
| NASA002AC | Cycle Protector | X | X | X | X | X | X | X |
| NASA00201SF | Support Foot Assembly | X | X | X | X | X | X | X |
| NASA001LS | Solenoid Valve Kit | X | X | X | X | X | X | X |
| NASA00201WS | Winter Start Kit | X | X | X | X | X | X | X |
| NASA407PS | High Pressure Switch | X | X | X | X | X | X | X |
| NASA00601CH | Crankcase Heater | X | X | X | X | | | |
| NASA00501CH | Crankcase Heater | | | | | X | X | X |
| NASA01301CH | Crankcase Heater (460-3) | | | | X | | | |
| NASA01401CH | Crankcase Heater (460-3) | | | | | | X | X |
| NASA00101IK | Isolation Relay | X | X | X | X | X | X | X |
| NASA00106SS | Snow Stand | X | X | X | X | X | X | X |
| NASA00201SJ | Sound Blanket | X | X | X | X | | | |
| NASA00101SJ | Sound Blanket | | | | | X | X | X |

*. Only use on models that have a “C” in position 15 of the 16-digit model number.

X= Accessory

## Accessory Usage Guideline

| Accessory | REQUIRED FOR LOW-AMBIENT COOLING APPLICATIONS (Below 55°F / 12.8°C) | REQUIRED FOR LONG LINE APPLICATIONS* | REQUIRED FOR SEA COAST APPLICATIONS (Within 2 miles / 3.22 km) |
|---|---|---|---|
| Accumulator | Standard | Standard | Standard |
| Ball Bearing Fan Motor | Standard | Standard | Standard |
| Compressor Start Assist Capacitor and Relay† | Yes | Yes | No |
| Crankcase Heater | Yes | Yes | No |
| Evaporator Freeze Thermostat | Yes | No | No |
| Isolation Relay | Yes | No | No |
| Liquid Line Solenoid Valve | No | See Long-Line Guideline | No |
| Low Ambient Switch | Yes | No | No |
| Support Feet | Recommended | No | Recommended |

*. For tubing line sets between 80 and 200 ft. (24.38 and 60.96 m), refer to Residential Split-System Long Line Application Guideline.
†. Not used on 3-phase units

## Accessory Description and Usage

**1. Ball-Bearing Fan Motor**

A fan motor with ball bearings which permits speed reduction while maintaining bearing lubrication.

**2. Compressor Start Assist - Capacitor and Relay**

Start capacitor and relay gives a ”hard” boost to compressor motor at each start up.

Usage Guideline:

Required for single-phase scroll compressors in the following applications:

Long line

Low ambient cooling

Suggested for all compressors in areas with a history of low voltage problems.

**3. Crankcase Heater**

An electric resistance heater which mounts to the base of the compressor to keep the lubricant warm during off cycles. Improves compressor lubrication on restart and minimizes the chance of liquid slugging.

Usage Guideline:

Required in low ambient cooling applications.

Required in long line applications.

Suggested in all commercial applications.

**4. Cycle Protector**

The cycle protector is designed to prevent compressor short cycling. This control provides an approximate 5-minute delay after power to the compressor has been interrupted for any reason, including power outage, protector control trip, thermostat jiggling, or normal cycling.

**5. Evaporator Freeze Thermostat**

An SPST temperature-actuated switch that stops unit operation when evaporator reaches freeze-up conditions.

Usage Guideline:

Required when low ambient kit has been added.

**6. Low-Ambient Pressure Switch Kit**

A long life pressure switch which is mounted to outdoor unit service valve. It is designed to cycle the outdoor fan motor in order to maintain head pressure within normal operating limits (approximately 100 psig to 225 psig). The control will maintain working head pressure at low-ambient temperatures down to 0°F (-18°C) when properly installed and also using wind baffles. Instructions provided in accessory kit.

Usage Guideline:

A Low-Ambient Pressure Switch must be used when cooling operation is used at outdoor temperatures below 55°F (12.8°C).

**7. Outdoor Air Temperature Sensor**

This device enables the thermostat to display the outdoor temperature. This device is also required to enable special thermostat features such as auxiliary heat lock out.

Usage Guideline:

Suggested for use with compatible thermostats.

**8. Sound Blanket**

Wraparound sound reducing cover for the compressor. Reduces the sound level of the compressor.

Usage Guideline:

Suggested when unit is installed closer than 15 ft (4.57 m) to quiet areas, bedrooms, etc.

Suggested when unit is installed between two houses less than 10 ft (3 m) apart.

Manufacturer reserves the right to change, at any time, specifications and designs without notice and without obligations.

## Accessory Description and Usage Continued...

**9. Support Feet**

Four or five stick-on plastic feet that raise the unit 4 in. (101.6 mm) above the mounting pad. This allows sand, dirt, and other debris to be flushed from the unit base, minimizing corrosion.

Usage Guideline:

Suggested in the following applications:

Coastal installations.

Windy areas or where debris is normally circulating.

Rooftop installations.

For improved sound ratings.

**10. Time-Delay Relay**

An SPST delay relay which briefly continues operation of indoor blower motor to provide additional cooling after the compressor cycles off.

**NOTE:** Most indoor unit controls include this feature. For those that do not, use the guideline below.

Usage Guideline:

For improved efficiency ratings for certain combinations of indoor and outdoor units. Refer to AHRI Directory of Certified Product Performance (AHRI Directory).

When a Time-Delay Relay (TDR) is called for in the AHRI Directory, use a 30 second TDR for Micro Channel Indoor units and use a 90 second TDR for Round Tube Plate Fin Indoor units.

**11. Winter Start Control**

This control is designed to alleviate nuisance opening of the low-pressure switch by bypassing it for the first 3 minutes of operation.

**Manufacturer reserves the right to change, at any time, specifications and designs without notice and without obligations.**

## Electrical Data

| UNIT SIZE | V/PH | OPER VOLTS* | | COMPR | | FAN | MCA | MAX FUSE† or CKT BRK AMPS |
|---|---|---|---|---|---|---|---|---|
| | | MAX | MIN | LRA | RLA | FLA | | |
| 18 | 208-230-1 | 253 | 197 | 45.1 | 8.3 | 0.50 | 10.9 | 15 |
| 24 | | | | 64.4 | 10.3 | 0.60 | 13.5 | 20 |
| 30 | | | | 67.0 | 12.5 | 0.70 | 16.3 | 25 |
| 36 | | | | 86.0 | 14.4 | 1.20 | 19.2 | 30 |
| 42 | | | | 123.0 | 19.0 | 1.05 | 24.9 | 40 |
| 48 | | | | 126.0 | 22.4 | 1.40 | 29.4 | 40 |
| 60 | | | | 157.0 | 23.7 | 1.50 | 31.1 | 50 |
| 36 | 208/230-3 | 253 | 187 | 70.0 | 9.0 | 1.20 | 12.5 | 20 |
| 48 | | | | 120.4 | 12.8 | 1.4 | 17.4 | 30 |
| 60 | | | | 156.4 | 16.0 | 1.50 | 21.5 | 35 |
| 36 | 460-3 | 506 | 414 | 39.0 | 4.1 | 0.64 | 5.7 | 15 |
| 48 | | | | 49.4 | 6.0 | 0.73 | 8.2 | 15 |
| 60 | | | | 69.0 | 7.1 | 0.94 | 9.8 | 15 |

*.Permissible limits of the voltage range at which the unit will operate satisfactorily
†.Time-Delay fuse.

**FLA**—Full Load Amps
**LRA**—Locked Rotor Amps
**MCA**—Minimum Circuit Amps
**RLA**—Rated Load Amps
**NOTE**: Control circuit is 24-V on all units and requires external power source. Copper wire must be used from service disconnect to unit.
All motors/compressors contain internal overload protection.
Short Circuit Current Rating (SCCR): 5kA rms

## Sound Power Level without Sound Shield

| UNIT SIZE | STANDARD RATING (dBA) | TYPICAL OCTAVE BAND SPECTRUM (dB, without tone adjustment) | | | | | | |
|---|---|---|---|---|---|---|---|---|
| | | 125 | 250 | 500 | 1000 | 2000 | 4000 | 8000 |
| 18 | 72 | 64 | 66 | 67 | 68 | 63 | 60 | 55 |
| 24 | 71 | 66 | 65 | 64 | 64 | 59 | 56 | 55 |
| 30 | 70 | 65 | 64 | 66 | 64 | 61 | 56 | 54 |
| 36 | 76 | 71 | 70 | 69 | 66 | 63 | 59 | 53 |
| 42 | 76 | 70 | 71 | 71 | 72 | 65 | 63 | 60 |
| 48 | 76 | 70 | 72 | 70 | 68 | 63 | 62 | 61 |
| 60 | 74 | 67 | 69 | 69 | 71 | 63 | 61 | 63 |

## Sound Power Level with Accessory Sound Shield

| UNIT SIZE | STANDARD RATING (dBA) | TYPICAL OCTAVE BAND SPECTRUM (dB, without tone adjustment) | | | | | | |
|---|---|---|---|---|---|---|---|---|
| | | 125 | 250 | 500 | 1000 | 2000 | 4000 | 8000 |
| 18 | 70 | 64 | 66 | 66 | 67 | 62 | 59 | 53 |
| 24 | 68 | 67 | 65 | 64 | 65 | 60 | 54 | 50 |
| 30 | 67 | 65 | 65 | 65 | 62 | 59 | 54 | 51 |
| 36 | 75 | 70 | 69 | 68 | 65 | 62 | 58 | 51 |
| 42 | 74 | 71 | 72 | 71 | 70 | 64 | 62 | 58 |
| 48 | 75 | 71 | 72 | 70 | 67 | 62 | 60 | 56 |
| 60 | 72 | 69 | 68 | 70 | 69 | 61 | 58 | 59 |

**NOTE**: Tested in compliance with AHRI 270 but not listed with AHRI.

## Charging Subcooling (TXV-Type Expansion Device)

| UNIT SIZE-VOLTAGE | REQUIRED SUBCOOLING °F (°C) |
|---|---|
| 18 | 6 (3.3) |
| 24 | 6 (3.3) |
| 30 | 12 (6.7) |
| 36 | 10 (5.6) |
| 42 | 12 (6.7) |
| 48 | 13 (7.2) |
| 60 | 7 (3.9) |

**Manufacturer reserves the right to change, at any time, specifications and designs without notice and without obligations.**

# Dimensions

| UNIT | SERIES | ELECTRICAL CHARACTERISTICS | | | | A | | B | | C | | D | | E | | F | | G | | H | | I | | J | | K | | OPERATING WEIGHT | | SHIPPING WEIGHT | | SHIPPING LENGTH / WIDTH (Sq.) | | SHIPPING HEIGHT | |
|---|---|---|---|---|---|---|---|---|---|---|---|---|---|---|---|---|---|---|---|---|---|---|---|---|---|---|---|---|---|---|---|---|---|---|---|
| | | | | | | INCH | MM | INCH | MM | INCH | MM | INCH | MM | INCH | MM | INCH | MM | INCH | MM | INCH | MM | INCH | MM | INCH | MM | INCH | MM | Lbs | Kgs | Lbs | Kgs | INCH | MM | INCH | MM |
| N5H5S18**AAA | A | Y | N | N | N | 31 3/16 | 792.5 | 32 1/16 | 815.1 | 5/8 | 15.9 | 6 9/16 | 166.1 | 24 11/16 | 626.3 | 9 1/8 | 231.3 | 1 1/8 | 28.2 | 3 13/16 | 97.4 | 12 1/2 | 317.5 | 11 | 279.4 | 11 3/4 | 298.5 | 149 | 67.6 | 169 | 76.7 | 32 3/16 | 817.9 | 34 7/16 | 875.2 |
| N5H5S24**AAA | A | Y | N | N | N | 31 3/16 | 792.5 | 35 1/2 | 901.4 | 5/8 | 15.9 | 6 9/16 | 166.1 | 24 11/16 | 626.3 | 9 1/8 | 231.3 | 1 1/8 | 28.2 | 3 13/16 | 97.4 | 13 | 330.2 | 15 1/8 | 384.2 | 16 1/2 | 419.1 | 176 | 79.8 | 196 | 88.9 | 32 3/16 | 817.9 | 37 7/8 | 961.6 |
| N5H5S30**AAA | A | Y | N | N | N | 31 3/16 | 792.5 | 38 7/8 | 987.8 | 3/4 | 19.1 | 6 9/16 | 166.1 | 24 11/16 | 626.3 | 9 1/8 | 231.3 | 1 1/8 | 28.2 | 3 13/16 | 97.4 | 14 | 355.6 | 14 3/4 | 374.7 | 15 1/2 | 393.7 | 168 | 76.2 | 189 | 85.7 | 32 3/16 | 817.9 | 41 1/4 | 1048.0 |
| N5H5S36**AAA | A | Y | Y | Y | N | 31 3/16 | 792.5 | 32 1/16 | 815.1 | 3/4 | 19.1 | 6 9/16 | 166.1 | 24 11/16 | 626.3 | 9 1/8 | 231.3 | 1 1/8 | 28.2 | 3 13/16 | 97.4 | 12 | 304.8 | 14 1/8 | 358.8 | 16 1/4 | 412.8 | 173 | 78.5 | 193 | 87.5 | 32 3/16 | 817.9 | 34 7/16 | 875.2 |
| N5H5S42**AAA | A | Y | N | N | N | 31 3/16 | 792.5 | 32 1/16 | 815.1 | 7/8 | 22.2 | 6 9/16 | 166.1 | 24 11/16 | 626.3 | 9 1/8 | 231.3 | 1 1/8 | 28.2 | 3 13/16 | 97.4 | 13 1/2 | 342.9 | 14 1/4 | 362.0 | 15 | 381.0 | 204 | 92.5 | 224 | 101.6 | 32 3/16 | 817.9 | 34 7/16 | 875.2 |
| N5H5S48**BAA | A | Y | Y | Y | N | 31 3/16 | 792.5 | 38 7/8 | 987.8 | 7/8 | 22.2 | 6 9/16 | 166.1 | 24 11/16 | 626.3 | 9 1/8 | 231.3 | 1 1/8 | 28.2 | 3 13/16 | 97.4 | 15 | 381.0 | 17 1/4 | 438.2 | 19 1/2 | 495.3 | 232 | 105.2 | 253 | 114.8 | 32 3/16 | 817.9 | 41 1/4 | 1048.0 |
| N5H5S60**AAA | A | Y | Y | Y | N | 35 | 889.0 | 35 1/2 | 901.4 | 7/8 | 22.2 | 6 9/16 | 166.1 | 28 7/16 | 722.8 | 9 1/8 | 231.3 | 1 1/8 | 28.2 | 3 13/16 | 97.4 | 13 | 330.2 | 15 1/2 | 393.7 | 16 3/4 | 425.5 | 234 | 106.1 | 255 | 115.7 | 36 | 914.9 | 37 7/8 | 961.6 |
| | | 208-230-1-60 | 208/230-3-60 | 460-3-60 | 575-3-60 | Y=YES N=NO | | | | | | | | | | | | | | | | | | | | | | | | | | | | | |

NOTES:

1. CENTER OF GRAVITY ⊕ .

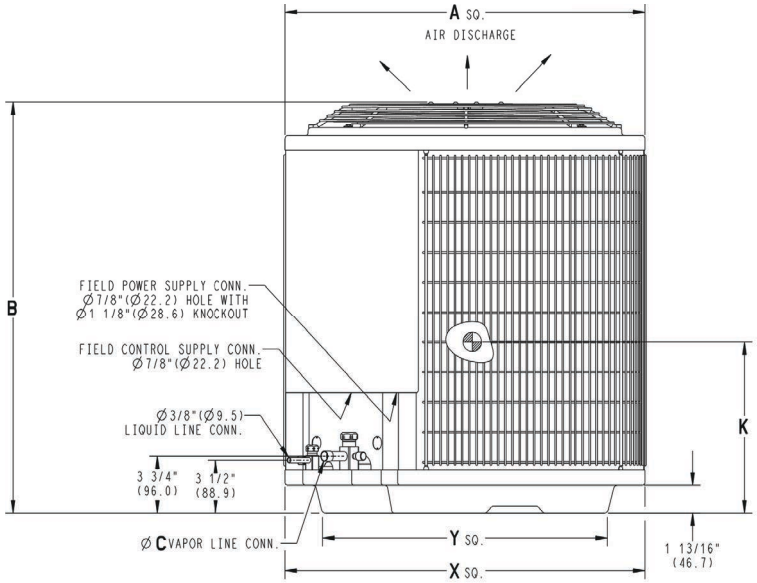


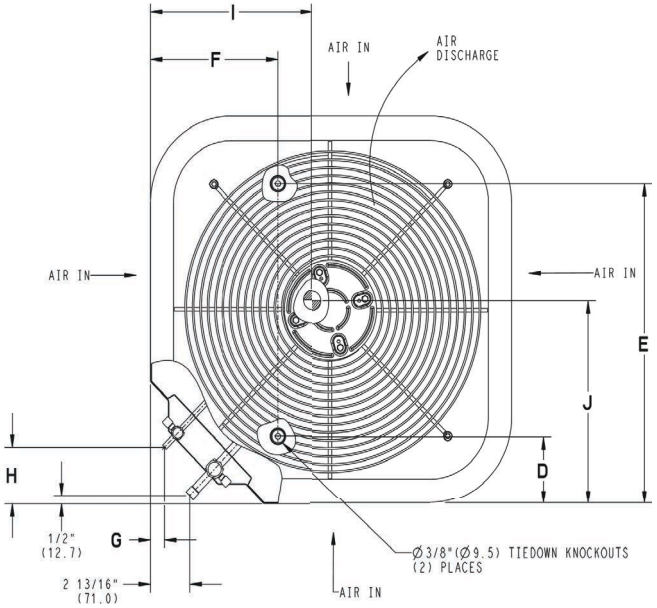


| UNIT SIZE | "X" MINIMUM GROUND MOUNTING PAD APPLICATION DIMENSIONS | | "Y" MINIMUM ROOF-TOP MOUNTING PAD APPLICATION DIMENSIONS | |
|---|---|---|---|---|
| - | 23 1/8 | 587.3 | 17 7/8 | 454.6 |
| - | 25 3/4 | 654.0 | 20 7/16 | 518.5 |
| 18,24,30,36,42,48 | 31 3/16 | 792.5 | 22 15/16 | 583.2 |
| 60 | 35 | 889.0 | 26 3/4 | 679.7 |

NOTE: ALL DIMENSIONS IN INCH (MM)

U.S. ECCN: Not Subject to Regulation (N.S.R.)

SD5985-4 REV. E

Manufacturer reserves the right to change, at any time, specifications and designs without notice and without obligations.

## Clearances

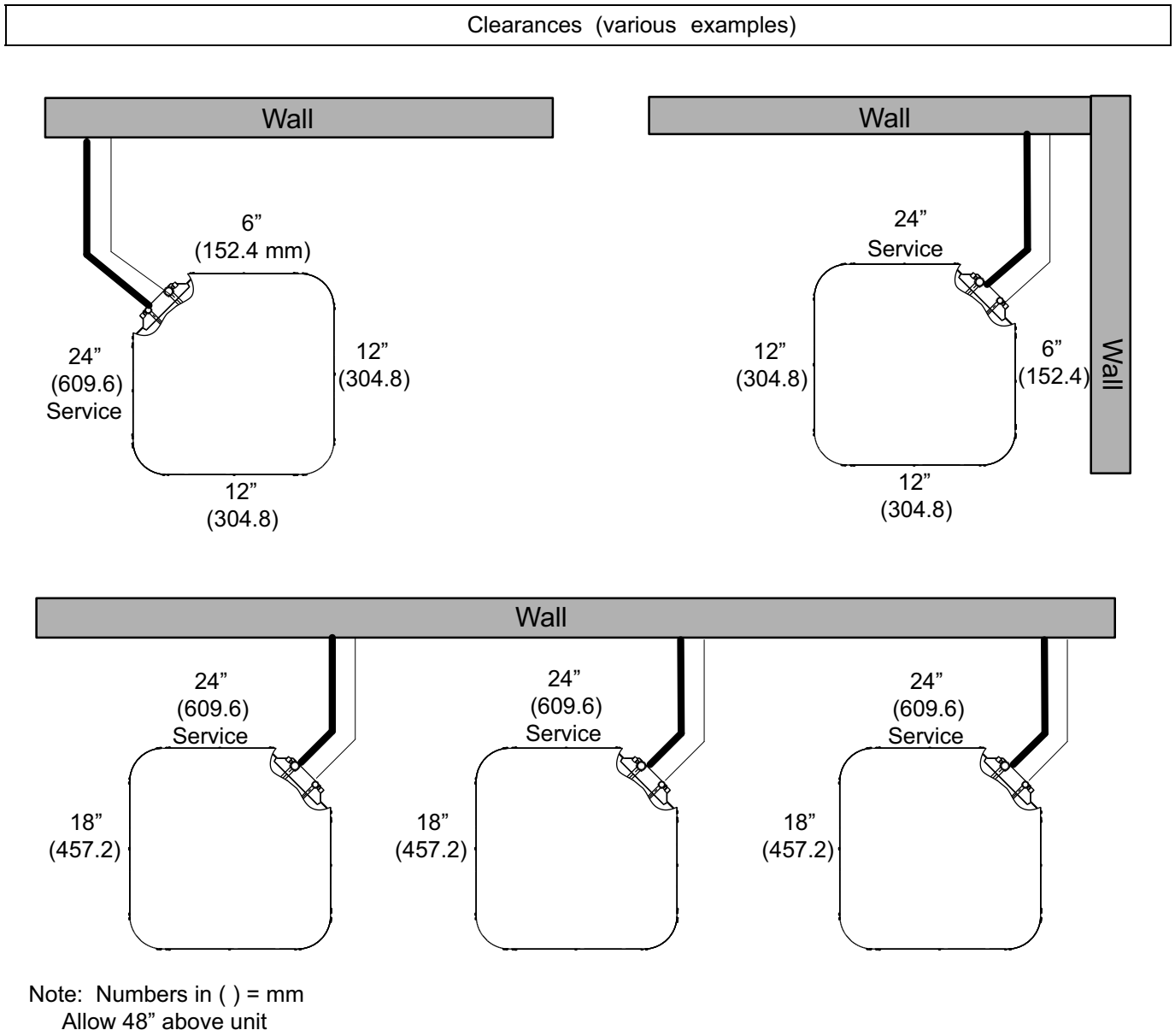


Note: Numbers in ( ) = mm
Allow 48” above unit

**IMPORTANT:** When installing multiple units in an alcove, roof well, or partially enclosed area, ensure there is adequate ventilation to prevent re-circulation of discharge air.

Manufacturer reserves the right to change, at any time, specifications and designs without notice and without obligations.

## Balance Point Worksheet

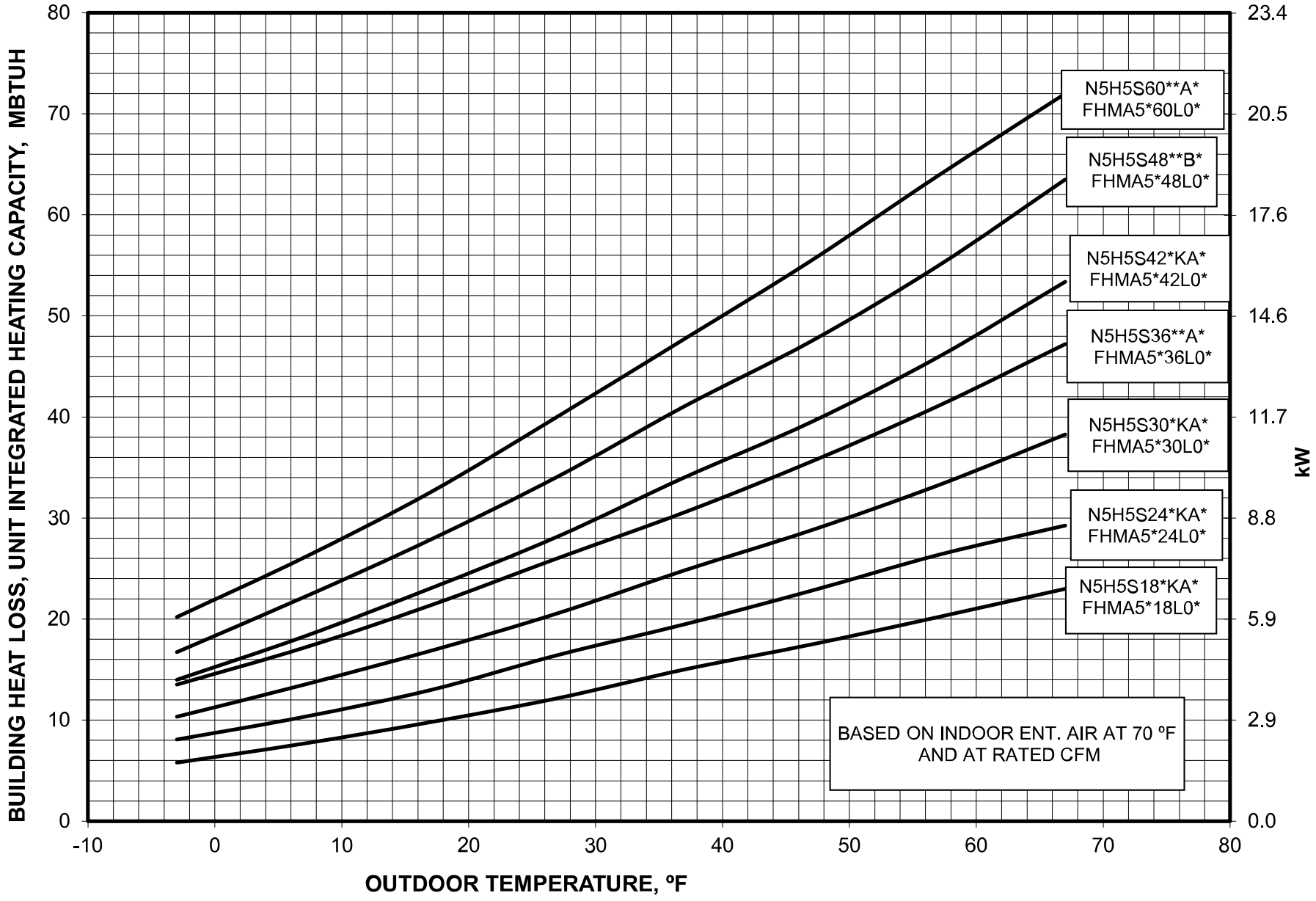


Manufacturer reserves the right to change, at any time, specifications and designs without notice and without obligations.

# DETAILED COOLING CAPACITIES

| EVAPORATOR AIR | | CONDENSER ENTERING AIR TEMPERATURES °F (°C) | | | | | | | | | | | | | | | | | |
|---|---|---|---|---|---|---|---|---|---|---|---|---|---|---|---|---|---|---|---|
| CFM | EWB | 75.0 (23.9) | | | 85.0 (29.4) | | | 95.0 (35.0) | | | 105.0 (40.6) | | | 115.0 (46.1) | | | 125.0 (51.7) | | |
| | | Capacity MBtuh | | Total Sys. KW** | Capacity MBtuh | | Total Sys. KW** | Capacity MBtuh | | Total Sys. KW** | Capacity MBtuh | | Total Sys. KW** | Capacity MBtuh | | Total Sys. KW** | Capacity MBtuh | | Total Sys. KW** |
| | | Total | Sens‡ | | Total | Sens‡ | | Total | Sens‡ | | Total | Sens‡ | | Total | Sens‡ | | Total | Sens‡ | |
| **N5H5S18AKA* Outdoor Section With FHMA5*18L0* Indoor Section** | | | | | | | | | | | | | | | | | | | |
| 540 | 72.0 (22.2) | 20.56 | 10.51 | 1.16 | 19.66 | 10.18 | 1.31 | 18.67 | 9.82 | 1.47 | 17.45 | 9.38 | 1.64 | 16.46 | 9.04 | 1.84 | 15.26 | 8.62 | 2.06 |
| | 67.0 (19.4) | 18.72 | 13.04 | 1.17 | 17.91 | 12.71 | 1.32 | 17 | 12.35 | 1.48 | 16.02 | 11.95 | 1.65 | 15.01 | 11.56 | 1.85 | 13.93 | 11.13 | 2.07 |
| | 63 (17.2)†† | 17.38 | 12.54 | 1.18 | 16.62 | 12.21 | 1.33 | 15.78 | 11.85 | 1.48 | 14.81 | 11.41 | 1.66 | 13.94 | 11.07 | 1.86 | 12.94 | 10.64 | 2.08 |
| | 62.0 (16.7) | 17.16 | 15.51 | 1.18 | 16.43 | 15.16 | 1.33 | 15.64 | 14.77 | 1.48 | 14.82 | 14.82 | 1.66 | 14.02 | 14.02 | 1.85 | 13.18 | 13.18 | 2.07 |
| | 57.0 (13.9) | 16.76 | 16.76 | 1.18 | 16.16 | 16.16 | 1.33 | 15.49 | 15.49 | 1.49 | 14.78 | 14.78 | 1.66 | 14 | 14 | 1.85 | 13.16 | 13.16 | 2.07 |
| 600 | 72.0 (22.2) | 20.83 | 10.93 | 1.17 | 19.9 | 10.59 | 1.32 | 18.88 | 10.23 | 1.48 | 17.78 | 9.85 | 1.66 | 16.61 | 9.45 | 1.85 | 15.36 | 9.01 | 2.08 |
| | 67.0 (19.4) | 18.99 | 13.73 | 1.19 | 18.15 | 13.39 | 1.33 | 17.22 | 13.02 | 1.49 | 16.22 | 12.63 | 1.67 | 15.18 | 12.21 | 1.86 | 14.07 | 11.78 | 2.09 |
| | 63 (17.2)†† | 17.65 | 13.18 | 1.19 | 16.86 | 12.84 | 1.34 | 16 | 12.47 | 1.5 | 14.96 | 12.03 | 1.67 | 14.1 | 11.67 | 1.87 | 13.08 | 11.24 | 2.09 |
| | 62.0 (16.7) | 17.5 | 16.41 | 1.19 | 16.76 | 16.03 | 1.34 | 15.99 | 15.99 | 1.5 | 15.13 | 15.13 | 1.67 | 14.41 | 14.41 | 1.87 | 13.53 | 13.53 | 2.09 |
| | 57.0 (13.9) | 17.3 | 17.3 | 1.2 | 16.67 | 16.67 | 1.34 | 15.97 | 15.97 | 1.5 | 15.21 | 15.21 | 1.67 | 14.39 | 14.39 | 1.87 | 13.51 | 13.51 | 2.09 |
| 675 | 72.0 (22.2) | 21.1 | 11.43 | 1.19 | 20.14 | 11.09 | 1.34 | 19.08 | 10.73 | 1.5 | 17.95 | 10.33 | 1.68 | 16.75 | 9.93 | 1.87 | 15.49 | 9.5 | 2.1 |
| | 67.0 (19.4) | 19.26 | 14.55 | 1.2 | 18.39 | 14.21 | 1.35 | 17.43 | 13.83 | 1.51 | 16.41 | 13.44 | 1.69 | 15.33 | 13.01 | 1.88 | 14.21 | 12.55 | 2.1 |
| | 63 (17.2)†† | 17.91 | 13.95 | 1.21 | 17.1 | 13.6 | 1.36 | 16.21 | 13.22 | 1.52 | 15.13 | 12.77 | 1.69 | 14.22 | 12.38 | 1.89 | 13.22 | 11.94 | 2.11 |
| | 62.0 (16.7) | 17.91 | 17.91 | 1.21 | 17.24 | 17.24 | 1.36 | 16.49 | 16.49 | 1.52 | 15.68 | 15.68 | 1.69 | 14.77 | 14.77 | 1.88 | 13.88 | 13.88 | 2.11 |
| | 57.0 (13.9) | 17.88 | 17.88 | 1.21 | 17.21 | 17.21 | 1.36 | 16.47 | 16.47 | 1.52 | 15.66 | 15.66 | 1.69 | 14.78 | 14.78 | 1.88 | 13.87 | 13.87 | 2.11 |
| **N5H5S24AKA* Outdoor Section With FHMA5*24L0*Indoor Section** | | | | | | | | | | | | | | | | | | | |
| 665 | 72.0 (22.2) | 26.92 | 13.97 | 1.47 | 25.78 | 13.53 | 1.65 | 24.57 | 13.07 | 1.85 | 23.28 | 12.59 | 2.09 | 21.88 | 12.06 | 2.35 | 20.37 | 11.5 | 2.64 |
| | 67.0 (19.4) | 24.56 | 17.17 | 1.48 | 23.51 | 16.72 | 1.66 | 22.4 | 16.25 | 1.87 | 21.2 | 15.74 | 2.1 | 19.95 | 15.23 | 2.36 | 18.57 | 14.66 | 2.66 |
| | 63 (17.2)†† | 22.82 | 16.55 | 1.49 | 21.83 | 16.09 | 1.67 | 20.8 | 15.62 | 1.87 | 19.7 | 15.13 | 2.11 | 18.52 | 14.6 | 2.37 | 17.26 | 14.04 | 2.67 |
| | 62.0 (16.7) | 22.46 | 20.29 | 1.49 | 21.5 | 19.83 | 1.67 | 20.51 | 19.34 | 1.88 | 19.46 | 18.82 | 2.11 | 18.35 | 18.23 | 2.37 | 17.24 | 17.24 | 2.67 |
| | 57.0 (13.9) | 21.6 | 21.6 | 1.5 | 20.84 | 20.84 | 1.67 | 20.03 | 20.03 | 1.88 | 19.17 | 19.17 | 2.11 | 18.24 | 18.24 | 2.37 | 17.21 | 17.21 | 2.67 |
| 800 | 72.0 (22.2) | 27.58 | 14.93 | 1.5 | 26.37 | 14.48 | 1.68 | 25.1 | 14.01 | 1.89 | 23.74 | 13.51 | 2.12 | 22.27 | 12.98 | 2.38 | 20.68 | 12.41 | 2.67 |
| | 67.0 (19.4) | 25.21 | 18.75 | 1.51 | 24.1 | 18.29 | 1.69 | 22.94 | 17.81 | 1.9 | 21.69 | 17.31 | 2.13 | 20.37 | 16.74 | 2.39 | 18.95 | 16.16 | 2.69 |
| | 63 (17.2)†† | 23.46 | 18.03 | 1.52 | 22.42 | 17.56 | 1.7 | 21.33 | 17.07 | 1.91 | 20.17 | 16.56 | 2.14 | 18.93 | 16.02 | 2.4 | 17.6 | 15.42 | 2.7 |
| | 62.0 (16.7) | 23.23 | 22.42 | 1.52 | 22.25 | 21.9 | 1.7 | 21.3 | 21.17 | 1.91 | 20.27 | 20.27 | 2.14 | 19.23 | 19.23 | 2.4 | 18.1 | 18.1 | 2.69 |
| | 57.0 (13.9) | 22.91 | 22.91 | 1.52 | 22.07 | 22.07 | 1.7 | 21.19 | 21.19 | 1.91 | 20.24 | 20.24 | 2.14 | 19.21 | 19.21 | 2.4 | 18.06 | 18.06 | 2.69 |
| 900 | 72.0 (22.2) | 27.91 | 15.6 | 1.52 | 26.68 | 15.15 | 1.7 | 25.36 | 14.67 | 1.91 | 23.97 | 14.17 | 2.14 | 22.46 | 13.63 | 2.4 | 20.82 | 13.06 | 2.7 |
| | 67.0 (19.4) | 25.56 | 19.86 | 1.54 | 24.42 | 19.39 | 1.72 | 23.22 | 18.9 | 1.92 | 21.94 | 18.39 | 2.15 | 20.58 | 17.82 | 2.42 | 19.11 | 17.22 | 2.71 |
| | 63 (17.2)†† | 23.81 | 19.06 | 1.55 | 22.74 | 18.59 | 1.73 | 21.61 | 18.09 | 1.93 | 20.41 | 17.56 | 2.16 | 19.16 | 17 | 2.43 | 17.79 | 16.39 | 2.72 |
| | 62.0 (16.7) | 23.75 | 23.75 | 1.55 | 22.82 | 22.82 | 1.72 | 21.88 | 21.88 | 1.93 | 20.87 | 20.87 | 2.16 | 19.78 | 19.78 | 2.42 | 18.58 | 18.58 | 2.72 |
| | 57.0 (13.9) | 23.67 | 23.67 | 1.55 | 22.79 | 22.79 | 1.72 | 21.85 | 21.85 | 1.93 | 20.85 | 20.85 | 2.16 | 19.76 | 19.76 | 2.42 | 18.56 | 18.56 | 2.72 |

Manufacturer reserves the right to change, at any time, specifications and designs without notice and without obligations.

# DETAILED COOLING CAPACITIES (Continued)

| EVAPORATOR AIR | | CONDENSER ENTERING AIR TEMPERATURES °F (°C) | | | | | | | | | | | | | | | | | |
|---|---|---|---|---|---|---|---|---|---|---|---|---|---|---|---|---|---|---|---|
| CFM | EWB | 75.0 (23.9) | | | 85.0 (29.4) | | | 95.0 (35.0) | | | 105.0 (40.6) | | | 115.0 (46.1) | | | 125.0 (51.7) | | |
| | | Capacity MBtuh | | Total Sys. KW** | Capacity MBtuh | | Total Sys. KW** | Capacity MBtuh | | Total Sys. KW** | Capacity MBtuh | | Total Sys. KW** | Capacity MBtuh | | Total Sys. KW** | Capacity MBtuh | | Total Sys. KW** |
| | | Total | Sens‡ | | Total | Sens‡ | | Total | Sens‡ | | Total | Sens‡ | | Total | Sens‡ | | Total | Sens‡ | |
| **N5H5S30AKA* Outdoor Section With FHMA5*30L0*Indoor Section** | | | | | | | | | | | | | | | | | | | |
| 915 | 72.0 (22.2) | 34.58 | 18.36 | 1.89 | 33 | 17.76 | 2.13 | 31.31 | 17.13 | 2.39 | 29.54 | 16.47 | 2.68 | 27.68 | 15.79 | 3.01 | 25.76 | 15.1 | 3.4 |
| | 67.0 (19.4) | 31.39 | 22.78 | 1.88 | 29.94 | 22.17 | 2.11 | 28.4 | 21.53 | 2.37 | 26.78 | 20.87 | 2.65 | 25.09 | 20.18 | 2.98 | 23.34 | 19.47 | 3.36 |
| | 63 (17.2)†† | 29.09 | 21.88 | 1.87 | 27.74 | 21.27 | 2.1 | 26.29 | 20.62 | 2.35 | 24.78 | 19.95 | 2.63 | 23.2 | 19.24 | 2.96 | 21.56 | 18.54 | 3.33 |
| | 62.0 (16.7) | 28.7 | 27.11 | 1.87 | 27.4 | 26.47 | 2.1 | 26.05 | 25.76 | 2.35 | 24.68 | 24.68 | 2.63 | 23.4 | 23.4 | 2.96 | 21.89 | 21.89 | 3.34 |
| | 57.0 (13.9) | 28.06 | 28.06 | 1.87 | 26.99 | 26.99 | 2.1 | 25.85 | 25.85 | 2.35 | 24.64 | 24.64 | 2.63 | 23.36 | 23.36 | 2.96 | 22.01 | 22.01 | 3.34 |
| 1000 | 72.0 (22.2) | 34.98 | 18.98 | 1.92 | 33.35 | 18.37 | 2.16 | 31.62 | 17.73 | 2.42 | 29.83 | 17.08 | 2.7 | 27.93 | 16.4 | 3.04 | 25.94 | 15.69 | 3.43 |
| | 67.0 (19.4) | 31.78 | 23.8 | 1.91 | 30.3 | 23.19 | 2.14 | 28.72 | 22.54 | 2.39 | 27.06 | 21.85 | 2.68 | 25.35 | 21.13 | 3 | 23.55 | 20.44 | 3.39 |
| | 63 (17.2)†† | 29.47 | 22.83 | 1.9 | 28.08 | 22.21 | 2.13 | 26.6 | 21.55 | 2.38 | 25.05 | 20.87 | 2.66 | 23.44 | 20.16 | 2.98 | 21.78 | 19.43 | 3.36 |
| | 62.0 (16.7) | 29.19 | 28.46 | 1.9 | 27.89 | 27.75 | 2.13 | 26.7 | 26.54 | 2.38 | 25.32 | 25.32 | 2.66 | 23.98 | 23.98 | 2.99 | 22.57 | 22.57 | 3.38 |
| | 57.0 (13.9) | 28.86 | 28.86 | 1.9 | 27.74 | 27.74 | 2.13 | 26.55 | 26.55 | 2.38 | 25.28 | 25.28 | 2.66 | 23.95 | 23.95 | 2.99 | 22.54 | 22.54 | 3.38 |
| 1125 | 72.0 (22.2) | 35.44 | 19.85 | 1.96 | 33.76 | 19.24 | 2.2 | 31.98 | 18.6 | 2.46 | 30.14 | 17.94 | 2.75 | 28.19 | 17.25 | 3.08 | 26.15 | 16.56 | 3.47 |
| | 67.0 (19.4) | 32.24 | 25.25 | 1.95 | 30.71 | 24.62 | 2.18 | 29.09 | 23.96 | 2.43 | 27.39 | 23.27 | 2.72 | 25.63 | 22.55 | 3.05 | 23.81 | 21.79 | 3.43 |
| | 63 (17.2)†† | 29.92 | 24.17 | 1.94 | 28.48 | 23.53 | 2.17 | 26.96 | 22.86 | 2.42 | 25.37 | 22.17 | 2.7 | 23.73 | 21.44 | 3.03 | 22.03 | 20.67 | 3.41 |
| | 62.0 (16.7) | 29.99 | 29.87 | 1.94 | 28.7 | 28.7 | 2.17 | 27.44 | 27.44 | 2.42 | 26.1 | 26.1 | 2.71 | 24.7 | 24.7 | 3.04 | 23.21 | 23.21 | 3.43 |
| | 57.0 (13.9) | 29.84 | 29.84 | 1.94 | 28.66 | 28.66 | 2.17 | 27.4 | 27.4 | 2.42 | 26.07 | 26.07 | 2.71 | 24.66 | 24.66 | 3.04 | 23.16 | 23.16 | 3.42 |
| **N5H5S36AKA* Outdoor Section With FHMA5*36L0*Indoor Section** | | | | | | | | | | | | | | | | | | | |
| 1050 | 72.0 (22.2) | 42.54 | 21.74 | 2.43 | 40.63 | 21.02 | 2.66 | 38.54 | 20.24 | 2.91 | 36.29 | 19.42 | 3.21 | 33.89 | 18.55 | 3.55 | 31.34 | 17.65 | 3.95 |
| | 67.0 (19.4) | 38.6 | 26.83 | 2.41 | 36.9 | 26.13 | 2.65 | 35 | 25.34 | 2.92 | 32.95 | 24.51 | 3.22 | 30.77 | 23.63 | 3.57 | 28.49 | 22.72 | 3.98 |
| | 63 (17.2)†† | 35.78 | 25.8 | 2.4 | 34.19 | 25.09 | 2.64 | 32.42 | 24.3 | 2.91 | 30.52 | 23.47 | 3.22 | 28.48 | 22.61 | 3.58 | 26.38 | 21.68 | 4 |
| | 62.0 (16.7) | 35.27 | 31.84 | 2.4 | 33.74 | 31.1 | 2.64 | 32.06 | 30.28 | 2.91 | 30.27 | 29.35 | 3.22 | 28.48 | 28.48 | 3.58 | 26.75 | 26.75 | 3.98 |
| | 57.0 (13.9) | 34.19 | 34.19 | 2.39 | 32.96 | 32.96 | 2.64 | 31.58 | 31.58 | 2.91 | 30.07 | 30.07 | 3.22 | 28.44 | 28.44 | 3.58 | 26.71 | 26.71 | 3.99 |
| 1200 | 72.0 (22.2) | 43.29 | 22.8 | 2.48 | 41.3 | 22.07 | 2.71 | 39.11 | 21.28 | 2.96 | 36.78 | 20.44 | 3.25 | 34.24 | 19.52 | 3.59 | 31.66 | 18.65 | 3.99 |
| | 67.0 (19.4) | 39.32 | 28.59 | 2.47 | 37.55 | 27.87 | 2.71 | 35.57 | 27.07 | 2.97 | 33.44 | 26.21 | 3.27 | 31.19 | 25.31 | 3.62 | 28.84 | 24.37 | 4.03 |
| | 63 (17.2)†† | 36.47 | 27.43 | 2.45 | 34.81 | 26.7 | 2.7 | 32.97 | 25.9 | 2.97 | 30.99 | 25.04 | 3.27 | 28.91 | 24.14 | 3.63 | 26.72 | 23.2 | 4.05 |
| | 62.0 (16.7) | 36.12 | 34.17 | 2.45 | 34.56 | 33.35 | 2.7 | 32.98 | 32.1 | 2.97 | 31.23 | 31.23 | 3.27 | 29.49 | 29.49 | 3.63 | 27.63 | 27.63 | 4.04 |
| | 57.0 (13.9) | 35.61 | 35.61 | 2.45 | 34.29 | 34.29 | 2.7 | 32.8 | 32.8 | 2.97 | 31.18 | 31.18 | 3.27 | 29.44 | 29.44 | 3.62 | 27.59 | 27.59 | 4.04 |
| 1350 | 72.0 (22.2) | 43.84 | 23.81 | 2.54 | 41.78 | 23.07 | 2.76 | 39.53 | 22.27 | 3.02 | 37.12 | 21.42 | 3.3 | 34.56 | 20.53 | 3.64 | 31.85 | 19.6 | 4.04 |
| | 67.0 (19.4) | 39.87 | 30.27 | 2.52 | 38.02 | 29.52 | 2.76 | 36 | 28.71 | 3.02 | 33.81 | 27.83 | 3.32 | 31.49 | 26.9 | 3.66 | 29.11 | 25.93 | 4.07 |
| | 63 (17.2)†† | 37 | 28.98 | 2.51 | 35.27 | 28.23 | 2.75 | 33.38 | 27.41 | 3.02 | 31.35 | 26.54 | 3.32 | 29.21 | 25.49 | 3.67 | 27 | 24.62 | 4.09 |
| | 62.0 (16.7) | 36.91 | 36.91 | 2.51 | 35.43 | 35.43 | 2.75 | 33.86 | 33.86 | 3.02 | 32.15 | 32.15 | 3.32 | 30.3 | 30.3 | 3.67 | 28.32 | 28.32 | 4.08 |
| | 57.0 (13.9) | 36.79 | 36.79 | 2.51 | 35.38 | 35.38 | 2.75 | 33.82 | 33.82 | 3.02 | 32.11 | 32.11 | 3.32 | 30.27 | 30.27 | 3.67 | 28.31 | 28.31 | 4.08 |

Manufacturer reserves the right to change, at any time, specifications and designs without notice and without obligations.

# DETAILED COOLING CAPACITIES (Continued)

| EVAPORATOR AIR | | CONDENSER ENTERING AIR TEMPERATURES °F (°C) | | | | | | | | | | | | | | | | | |
|---|---|---|---|---|---|---|---|---|---|---|---|---|---|---|---|---|---|---|---|
| | | 75.0 (23.9) | | | 85.0 (29.4) | | | 95.0 (35.0) | | | 105.0 (40.6) | | | 115.0 (46.1) | | | 125.0 (51.7) | | |
| CFM | EWB | Capacity MBtuh | | Total Sys. KW** | Capacity MBtuh | | Total Sys. KW** | Capacity MBtuh | | Total Sys. KW** | Capacity MBtuh | | Total Sys. KW** | Capacity MBtuh | | Total Sys. KW** | Capacity MBtuh | | Total Sys. KW** |
| | | Total | Sens‡ | | Total | Sens‡ | | Total | Sens‡ | | Total | Sens‡ | | Total | Sens‡ | | Total | Sens‡ | |
| **N5H5S42AKA* Outdoor Section With FHMA5*42L0* Indoor Section** | | | | | | | | | | | | | | | | | | | |
| **1240** | 72.0 (22.2) | 49.41 | 25.83 | 2.78 | 47.34 | 25.04 | 3.09 | 45.14 | 24.21 | 3.44 | 42.71 | 23.31 | 3.84 | 40.15 | 22.37 | 4.3 | 37.39 | 21.37 | 4.83 |
| | 67.0 (19.4) | 44.91 | 31.96 | 2.76 | 43.04 | 31.17 | 3.07 | 41 | 30.32 | 3.42 | 38.8 | 29.41 | 3.82 | 36.47 | 28.46 | 4.28 | 33.98 | 27.45 | 4.81 |
| | 63 (17.2)†† | 41.63 | 30.71 | 2.74 | 39.89 | 29.93 | 3.05 | 38 | 29.08 | 3.4 | 35.95 | 28.17 | 3.8 | 33.77 | 27.21 | 4.26 | 31.45 | 26.19 | 4.79 |
| | 62.0 (16.7) | 41.08 | 37.94 | 2.74 | 39.42 | 37.12 | 3.05 | 37.62 | 36.21 | 3.4 | 35.72 | 35.01 | 3.8 | 33.78 | 33.78 | 4.26 | 31.87 | 31.87 | 4.79 |
| | 57.0 (13.9) | 39.95 | 39.95 | 2.74 | 38.6 | 38.6 | 3.05 | 37.11 | 37.11 | 3.4 | 35.49 | 35.49 | 3.8 | 33.72 | 33.72 | 4.26 | 31.82 | 31.82 | 4.79 |
| **1400** | 72.0 (22.2) | 50.19 | 26.99 | 2.83 | 48.05 | 26.19 | 3.14 | 45.75 | 25.34 | 3.49 | 43.26 | 24.44 | 3.89 | 40.6 | 23.48 | 4.35 | 37.75 | 22.47 | 4.88 |
| | 67.0 (19.4) | 45.66 | 33.86 | 2.81 | 43.72 | 33.05 | 3.12 | 41.61 | 32.19 | 3.47 | 39.35 | 31.26 | 3.87 | 36.94 | 30.28 | 4.33 | 34.38 | 29.24 | 4.86 |
| | 63 (17.2)†† | 42.36 | 32.48 | 2.79 | 40.56 | 31.68 | 3.1 | 38.59 | 30.81 | 3.45 | 36.48 | 29.88 | 3.85 | 34.24 | 28.9 | 4.31 | 31.86 | 27.85 | 4.84 |
| | 62.0 (16.7) | 42 | 40.44 | 2.79 | 40.31 | 39.53 | 3.1 | 38.59 | 38.26 | 3.45 | 36.8 | 36.63 | 3.85 | 34.87 | 34.87 | 4.32 | 32.86 | 32.86 | 4.85 |
| | 57.0 (13.9) | 41.45 | 41.45 | 2.79 | 40.01 | 40.01 | 3.1 | 38.42 | 38.42 | 3.45 | 36.69 | 36.69 | 3.85 | 34.83 | 34.83 | 4.32 | 32.81 | 32.81 | 4.85 |
| **1575** | 72.0 (22.2) | 50.83 | 28.19 | 2.88 | 48.62 | 27.38 | 3.19 | 46.25 | 26.53 | 3.54 | 43.66 | 25.6 | 3.94 | 40.94 | 24.64 | 4.4 | 38.03 | 23.62 | 4.93 |
| | 67.0 (19.4) | 46.3 | 35.84 | 2.86 | 44.29 | 35.02 | 3.17 | 42.12 | 34.14 | 3.52 | 39.8 | 33.19 | 3.92 | 37.33 | 32.18 | 4.38 | 34.72 | 31.09 | 4.91 |
| | 63 (17.2)†† | 42.98 | 34.32 | 2.85 | 41.12 | 33.5 | 3.16 | 39.1 | 32.61 | 3.51 | 36.93 | 31.66 | 3.91 | 34.63 | 30.64 | 4.37 | 32.21 | 29.55 | 4.9 |
| | 62.0 (16.7) | 43.03 | 42.54 | 2.85 | 41.35 | 41.35 | 3.16 | 39.66 | 39.66 | 3.51 | 37.83 | 37.83 | 3.91 | 35.84 | 35.84 | 4.37 | 33.7 | 33.7 | 4.9 |
| | 57.0 (13.9) | 42.82 | 42.82 | 2.85 | 41.29 | 41.29 | 3.16 | 39.61 | 39.61 | 3.51 | 37.78 | 37.78 | 3.91 | 35.82 | 35.82 | 4.37 | 33.69 | 33.69 | 4.9 |
| **N5H5S48AKB* Outdoor Section With FHMA5*48L0*Indoor Section** | | | | | | | | | | | | | | | | | | | |
| **1250** | 72.0 (22.2) | 56.66 | 28.52 | 3.15 | 54.39 | 27.64 | 3.52 | 51.91 | 26.69 | 3.95 | 49.15 | 25.65 | 4.43 | 46.05 | 24.49 | 4.98 | 42.62 | 23.24 | 5.61 |
| | 67.0 (19.4) | 51.3 | 34.6 | 3.14 | 49.27 | 33.73 | 3.5 | 47 | 32.78 | 3.92 | 44.48 | 31.73 | 4.4 | 41.69 | 30.58 | 4.94 | 38.53 | 29.3 | 5.57 |
| | 63 (17.2)†† | 47.5 | 33.32 | 3.13 | 45.58 | 32.44 | 3.48 | 43.48 | 31.48 | 3.9 | 41.14 | 30.44 | 4.37 | 38.53 | 29.28 | 4.92 | 35.61 | 28 | 5.54 |
| | 62.0 (16.7) | 46.66 | 40.62 | 3.13 | 44.79 | 39.73 | 3.48 | 42.76 | 38.76 | 3.89 | 40.51 | 37.68 | 4.37 | 38.02 | 36.46 | 4.92 | 35.31 | 35.31 | 5.54 |
| | 57.0 (13.9) | 44.41 | 44.41 | 3.12 | 42.96 | 42.96 | 3.47 | 41.36 | 41.36 | 3.88 | 39.57 | 39.57 | 4.36 | 37.55 | 37.55 | 4.91 | 35.24 | 35.24 | 5.54 |
| **1600** | 72.0 (22.2) | 58.89 | 31.23 | 3.24 | 56.4 | 30.32 | 3.62 | 53.69 | 29.33 | 4.05 | 50.71 | 28.26 | 4.54 | 47.38 | 27.07 | 5.1 | 43.69 | 25.78 | 5.72 |
| | 67.0 (19.4) | 53.41 | 38.98 | 3.23 | 51.15 | 38.06 | 3.6 | 48.72 | 37.07 | 4.02 | 46 | 35.96 | 4.51 | 43 | 34.78 | 5.05 | 39.66 | 33.45 | 5.68 |
| | 63 (17.2)†† | 49.49 | 37.39 | 3.23 | 47.39 | 36.46 | 3.58 | 45.11 | 35.47 | 4 | 42.59 | 34.38 | 4.48 | 39.8 | 33.17 | 5.02 | 36.69 | 31.84 | 5.65 |
| | 62.0 (16.7) | 48.96 | 46.5 | 3.23 | 46.99 | 45.48 | 3.58 | 45.02 | 43.97 | 4 | 42.79 | 42.79 | 4.48 | 40.49 | 40.49 | 5.03 | 37.87 | 37.87 | 5.66 |
| | 57.0 (13.9) | 48.27 | 48.27 | 3.22 | 46.6 | 46.6 | 3.58 | 44.77 | 44.77 | 4 | 42.73 | 42.73 | 4.48 | 40.42 | 40.42 | 5.03 | 37.82 | 37.82 | 5.66 |
| **1800** | 72.0 (22.2) | 59.74 | 32.68 | 3.3 | 57.16 | 31.75 | 3.68 | 54.36 | 30.75 | 4.11 | 51.26 | 29.65 | 4.6 | 47.81 | 28.43 | 5.15 | 44.06 | 27.15 | 5.78 |
| | 67.0 (19.4) | 54.23 | 41.34 | 3.29 | 51.9 | 40.4 | 3.66 | 49.39 | 39.39 | 4.08 | 46.6 | 38.27 | 4.56 | 43.52 | 37.04 | 5.11 | 40.11 | 35.66 | 5.74 |
| | 63 (17.2)†† | 50.27 | 39.57 | 3.28 | 48.12 | 38.64 | 3.64 | 45.77 | 37.61 | 4.06 | 43.18 | 36.49 | 4.54 | 40.3 | 35.24 | 5.08 | 37.13 | 33.85 | 5.71 |
| | 62.0 (16.7) | 50.1 | 50.1 | 3.28 | 48.27 | 48.27 | 3.64 | 46.33 | 46.33 | 4.06 | 44.16 | 44.16 | 4.54 | 41.72 | 41.72 | 5.09 | 38.97 | 38.97 | 5.73 |
| | 57.0 (13.9) | 49.95 | 49.95 | 3.28 | 48.2 | 48.2 | 3.64 | 46.26 | 46.26 | 4.06 | 44.1 | 44.1 | 4.54 | 41.66 | 41.66 | 5.1 | 38.91 | 38.91 | 5.73 |

Manufacturer reserves the right to change, at any time, specifications and designs without notice and without obligations.

# DETAILED COOLING CAPACITIES (Continued)

| EVAPORATOR AIR | | CONDENSER ENTERING AIR TEMPERATURES °F (°C) | | | | | | | | | | | | | | | | | |
|---|---|---|---|---|---|---|---|---|---|---|---|---|---|---|---|---|---|---|---|
| CFM | EWB | 75.0 (23.9) | | | 85.0 (29.4) | | | 95.0 (35.0) | | | 105.0 (40.6) | | | 115.0 (46.1) | | | 125.0 (51.7) | | |
| | | Capacity MBtuh | | Total Sys. KW** | Capacity MBtuh | | Total Sys. KW** | Capacity MBtuh | | Total Sys. KW** | Capacity MBtuh | | Total Sys. KW** | Capacity MBtuh | | Total Sys. KW** | Capacity MBtuh | | Total Sys. KW** |
| | | Total | Sens‡ | | Total | Sens‡ | | Total | Sens‡ | | Total | Sens‡ | | Total | Sens‡ | | Total | Sens‡ | |
| **N5H5S60AKAAA Outdoor Section With FHMA5*60L0*Indoor Section** | | | | | | | | | | | | | | | | | | | |
| 1775 | 72.0 (22.2) | 69.13 | 35.84 | 4.07 | 66.01 | 34.69 | 4.53 | 62.68 | 33.48 | 5.05 | 58.98 | 32.15 | 5.64 | 55.14 | 30.78 | 6.31 | 50.84 | 29.3 | 7.06 |
| | 67.0 (19.4) | 63.31 | 44.81 | 4.03 | 60.51 | 43.67 | 4.49 | 57.5 | 42.45 | 5 | 54.24 | 41.14 | 5.59 | 50.69 | 39.73 | 6.25 | 46.83 | 38.21 | 7.01 |
| | 63 (17.2)†† | 58.99 | 43.17 | 4.01 | 56.42 | 42.04 | 4.46 | 53.64 | 40.83 | 4.97 | 50.62 | 39.52 | 5.55 | 47.35 | 38.12 | 6.22 | 43.77 | 36.6 | 6.98 |
| | 62.0 (16.7) | 58.15 | 53.51 | 4.01 | 55.69 | 52.32 | 4.45 | 53.05 | 51.01 | 4.96 | 50.43 | 49.01 | 5.55 | 47.56 | 47.56 | 6.22 | 44.54 | 44.54 | 6.98 |
| | 57.0 (13.9) | 56.88 | 56.88 | 4 | 54.86 | 54.86 | 4.45 | 52.64 | 52.64 | 4.96 | 50.19 | 50.19 | 5.55 | 47.49 | 47.49 | 6.22 | 44.48 | 44.48 | 6.98 |
| 2000 | 72.0 (22.2) | 70.03 | 37.44 | 4.15 | 66.79 | 36.27 | 4.61 | 63.34 | 35.04 | 5.13 | 59.6 | 33.72 | 5.72 | 55.57 | 32.31 | 6.39 | 51.18 | 30.8 | 7.14 |
| | 67.0 (19.4) | 64.23 | 47.48 | 4.11 | 61.33 | 46.31 | 4.56 | 58.21 | 45.07 | 5.08 | 54.83 | 43.73 | 5.67 | 51.19 | 42.3 | 6.33 | 47.24 | 40.74 | 7.09 |
| | 63 (17.2)†† | 59.92 | 45.66 | 4.09 | 57.25 | 44.5 | 4.54 | 54.37 | 43.27 | 5.05 | 51.26 | 41.94 | 5.63 | 47.89 | 40.5 | 6.3 | 44.22 | 38.93 | 7.05 |
| | 62.0 (16.7) | 59.36 | 57.03 | 4.09 | 56.89 | 56.89 | 4.53 | 54.43 | 54.43 | 5.05 | 51.79 | 51.79 | 5.64 | 48.93 | 48.93 | 6.31 | 45.73 | 45.73 | 7.07 |
| | 57.0 (13.9) | 58.9 | 58.9 | 4.08 | 56.73 | 56.73 | 4.53 | 54.36 | 54.36 | 5.05 | 51.75 | 51.75 | 5.64 | 48.87 | 48.87 | 6.31 | 45.68 | 45.68 | 7.07 |
| 2250 | 72.0 (22.2) | 70.76 | 39.14 | 4.23 | 67.42 | 37.96 | 4.7 | 63.84 | 36.71 | 5.22 | 60 | 35.37 | 5.81 | 55.87 | 33.96 | 6.48 | 51.32 | 32.43 | 7.23 |
| | 67.0 (19.4) | 64.99 | 50.33 | 4.2 | 62 | 49.14 | 4.65 | 58.79 | 47.87 | 5.17 | 55.33 | 46.5 | 5.76 | 51.6 | 45.01 | 6.42 | 47.57 | 43.38 | 7.18 |
| | 63 (17.2)†† | 60.7 | 48.31 | 4.17 | 57.95 | 47.13 | 4.62 | 54.98 | 45.86 | 5.13 | 51.79 | 44.49 | 5.72 | 48.34 | 43.01 | 6.38 | 44.62 | 41.36 | 7.14 |
| | 62.0 (16.7) | 61.03 | 59.18 | 4.18 | 58.5 | 58.5 | 4.63 | 55.97 | 55.97 | 5.14 | 53.2 | 53.2 | 5.73 | 50.14 | 50.14 | 6.4 | 46.76 | 46.76 | 7.17 |
| | 57.0 (13.9) | 60.74 | 60.74 | 4.17 | 58.42 | 58.42 | 4.62 | 55.9 | 55.9 | 5.14 | 53.14 | 53.14 | 5.73 | 50.13 | 50.13 | 6.41 | 46.71 | 46.71 | 7.17 |

# Detailed cooling capacities are based on indoor and outdoor unit at the same elevation per AHRI standard 210/240-2020. If additional tubing length and/or indoor unit is located above outdoor unit, a slight variation in capacity may occur.
}Sensible capacities shown are based on 80°F (27°C) entering air at the indoor coil. For sensible capacities at other than 80°F (27°C), deduct 835 Btuh (245 kW) per 1000 CFM (480 L/S) of indoor coil air for each degree below 80°F (27°C), or add 835 Btuh (245 kW) per 1000 CFM (480 L/S) of indoor coil air per degree above 80°F (27°C).
**Total System. kw is total of indoor and outdoor unit kilowatts.
{{At TVA rating indoor condition (75°F edb/63°F ewb). All other indoor air temperatures are at 80°F edb.
**NOTE**: When the required data falls between the published data, interpolation may be performed. Extrapolation is not an acceptable practice.
**EWB** — Entering Wet Bulb1

Manufacturer reserves the right to change, at any time, specifications and designs without notice and without obligations.

# HEAT PUMP HEATING PERFORMANCE

| INDOOR AIR | | OUTDOOR COIL ENTERING AIR TEMPERATURES °F (°C) | | | | | | | | | | | | | | | | | | | | | | | |
|---|---|---|---|---|---|---|---|---|---|---|---|---|---|---|---|---|---|---|---|---|---|---|---|---|---|
| | | -3.0 (-19.4) | | | 7.0 (-13.9) | | | 17.0 (-8.3) | | | 27.0 (-2.8) | | | 37.0 (2.8) | | | 47.0 (8.3) | | | 57.0 (13.9) | | | 67.0 (19.4) | | |
| EDB | CFM | Capacity MBtuh | | Total Sys. KW† | Capacity MBtuh | | Total Sys. kW† | Capacity MBtuh | | Total Sys. kW† | Capacity MBtuh | | Total Sys. kW† | Capacity MBtuh | | Total Sys. kW† | Capacity MBtuh | | Total Sys. kW† | Capacity MBtuh | | Total Sys. kW† | Capacity MBtuh | | Total Sys. kW† |
| | | Total | Integ* | | Total | Integ* | | Total | Integ* | | Total | Integ* | | Total | Integ* | | Total | Integ* | | Total | Integ* | | Total | Integ* | |
| **N5H5S18AKA* Outdoor Section With FHMA5*18L0* Indoor Section** | | | | | | | | | | | | | | | | | | | | | | | | | |
| 65 (18.3) | 540 | 6.11 | 5.62 | 1.09 | 7.97 | 7.33 | 1.13 | 10.10 | 9.21 | 1.18 | 11.85 | 10.52 | 1.22 | 15.23 | 13.86 | 1.28 | 17.74 | 17.74 | 1.33 | 20.52 | 20.52 | 1.39 | 23.29 | 23.29 | 1.42 |
| | 600 | 6.18 | 5.69 | 1.09 | 8.07 | 7.42 | 1.13 | 10.22 | 9.32 | 1.17 | 12.63 | 11.22 | 1.22 | 15.36 | 13.97 | 1.27 | 17.92 | 17.92 | 1.31 | 20.75 | 20.75 | 1.36 | 23.46 | 23.46 | 1.39 |
| | 675 | 6.28 | 5.78 | 1.10 | 8.18 | 7.52 | 1.14 | 10.34 | 9.43 | 1.18 | 12.78 | 11.35 | 1.22 | 15.50 | 14.10 | 1.26 | 18.09 | 18.09 | 1.30 | 20.87 | 20.87 | 1.33 | 23.61 | 23.61 | 1.37 |
| 70.0 (21.1) | 540 | 5.80 | 5.34 | 1.13 | 7.69 | 7.06 | 1.18 | 9.81 | 8.95 | 1.23 | 12.17 | 10.81 | 1.28 | 15.02 | 13.66 | 1.34 | 17.50 | 17.50 | 1.40 | 20.21 | 20.21 | 1.45 | 23.00 | 23.00 | 1.49 |
| | 600 | 5.89 | 5.42 | 1.14 | 7.79 | 7.16 | 1.18 | 9.93 | 9.06 | 1.23 | 12.33 | 10.95 | 1.27 | 15.15 | 13.79 | 1.33 | 17.67 | 17.67 | 1.37 | 20.44 | 20.44 | 1.43 | 23.18 | 23.18 | 1.46 |
| | 675 | 5.98 | 5.50 | 1.15 | 7.90 | 7.26 | 1.19 | 10.06 | 9.18 | 1.23 | 12.47 | 11.07 | 1.27 | 15.29 | 13.92 | 1.32 | 17.84 | 17.84 | 1.36 | 20.64 | 20.64 | 1.40 | 23.33 | 23.33 | 1.43 |
| 75 (23.9) | 540 | 5.49 | 5.05 | 1.17 | 7.42 | 6.82 | 1.23 | 9.51 | 8.67 | 1.28 | 11.90 | 10.57 | 1.34 | 14.77 | 13.44 | 1.40 | 17.25 | 17.25 | 1.46 | 19.92 | 19.92 | 1.52 | 22.69 | 22.69 | 1.57 |
| | 600 | 5.57 | 5.13 | 1.18 | 7.48 | 6.88 | 1.23 | 9.63 | 8.78 | 1.28 | 12.01 | 10.67 | 1.33 | 14.92 | 13.58 | 1.39 | 17.42 | 17.42 | 1.44 | 20.13 | 20.13 | 1.49 | 22.88 | 22.88 | 1.53 |
| | 675 | 5.67 | 5.21 | 1.19 | 7.59 | 6.98 | 1.23 | 9.76 | 8.90 | 1.28 | 12.17 | 10.81 | 1.33 | 15.07 | 13.72 | 1.38 | 17.59 | 17.59 | 1.42 | 20.35 | 20.35 | 1.47 | 23.04 | 23.04 | 1.50 |
| **N5H5S24AKA* Outdoor Section With FHMA5*24L0*Indoor Section** | | | | | | | | | | | | | | | | | | | | | | | | | |
| 65 (18.3) | 665 | 8.52 | 7.84 | 1.43 | 10.71 | 9.84 | 1.47 | 13.36 | 12.18 | 1.52 | 16.70 | 14.83 | 1.60 | 19.74 | 17.96 | 1.67 | 23.10 | 23.10 | 1.75 | 26.61 | 26.61 | 1.83 | 29.51 | 29.51 | 1.89 |
| | 800 | 8.76 | 8.06 | 1.45 | 10.98 | 10.09 | 1.47 | 13.67 | 12.46 | 1.52 | 16.99 | 15.09 | 1.58 | 20.06 | 18.25 | 1.63 | 23.51 | 23.51 | 1.70 | 26.78 | 26.78 | 1.75 | 29.62 | 29.62 | 1.81 |
| | 900 | 8.92 | 8.20 | 1.46 | 11.15 | 10.25 | 1.49 | 13.86 | 12.64 | 1.52 | 17.14 | 15.23 | 1.58 | 20.26 | 18.43 | 1.62 | 23.75 | 23.75 | 1.68 | 26.81 | 26.81 | 1.72 | 29.62 | 29.62 | 1.77 |
| 70.0 (21.1) | 665 | 8.08 | 7.44 | 1.48 | 10.31 | 9.47 | 1.52 | 12.98 | 11.84 | 1.58 | 16.43 | 14.59 | 1.68 | 19.48 | 17.73 | 1.75 | 22.80 | 22.80 | 1.83 | 26.34 | 26.34 | 1.92 | 29.24 | 29.24 | 1.99 |
| | 800 | 8.31 | 7.64 | 1.50 | 10.57 | 9.71 | 1.53 | 13.28 | 12.11 | 1.58 | 16.72 | 14.85 | 1.66 | 19.79 | 18.01 | 1.71 | 23.19 | 23.19 | 1.78 | 26.55 | 26.55 | 1.84 | 29.37 | 29.37 | 1.90 |
| | 900 | 8.46 | 7.78 | 1.51 | 10.73 | 9.86 | 1.54 | 13.47 | 12.28 | 1.59 | 16.89 | 15.00 | 1.65 | 19.98 | 18.18 | 1.70 | 23.43 | 23.43 | 1.77 | 26.61 | 26.61 | 1.81 | 29.39 | 29.39 | 1.86 |
| 75 (23.9) | 665 | 7.60 | 6.99 | 1.53 | 9.90 | 9.10 | 1.58 | 12.61 | 11.49 | 1.65 | 15.71 | 13.96 | 1.74 | 19.24 | 17.50 | 1.84 | 22.50 | 22.50 | 1.93 | 26.06 | 26.06 | 2.02 | 28.96 | 28.96 | 2.08 |
| | 800 | 7.85 | 7.23 | 1.55 | 10.15 | 9.33 | 1.59 | 12.90 | 11.76 | 1.65 | 16.12 | 14.32 | 1.72 | 19.54 | 17.78 | 1.80 | 22.89 | 22.89 | 1.87 | 26.31 | 26.31 | 1.94 | 29.10 | 29.10 | 1.99 |
| | 900 | 8.00 | 7.36 | 1.57 | 10.31 | 9.47 | 1.61 | 13.07 | 11.92 | 1.66 | 16.44 | 14.60 | 1.72 | 19.71 | 17.94 | 1.79 | 23.12 | 23.12 | 1.85 | 26.39 | 26.39 | 1.91 | 29.13 | 29.13 | 1.95 |
| **N5H5S30AKA* Outdoor Section With FHMA5*30L0*Indoor Section** | | | | | | | | | | | | | | | | | | | | | | | | | |
| 65 (18.3) | 915 | 10.87 | 10.00 | 1.69 | 13.99 | 12.85 | 1.74 | 17.36 | 15.83 | 1.79 | 21.52 | 19.12 | 1.88 | 25.19 | 22.92 | 1.94 | 29.23 | 29.23 | 2.02 | 33.77 | 33.77 | 2.13 | 38.80 | 38.80 | 2.24 |
| | 1000 | 10.98 | 10.10 | 1.71 | 14.14 | 13.00 | 1.75 | 17.54 | 15.99 | 1.80 | 21.71 | 19.28 | 1.87 | 25.39 | 23.10 | 1.93 | 29.49 | 29.49 | 2.00 | 34.10 | 34.10 | 2.10 | 38.98 | 38.98 | 2.19 |
| | 1125 | 11.18 | 10.28 | 1.73 | 14.34 | 13.18 | 1.76 | 17.77 | 16.21 | 1.81 | 21.93 | 19.48 | 1.87 | 25.64 | 23.33 | 1.92 | 29.79 | 29.79 | 1.99 | 34.50 | 34.50 | 2.08 | 39.10 | 39.10 | 2.15 |
| 70.0 (21.1) | 915 | 10.35 | 9.52 | 1.76 | 13.50 | 12.41 | 1.81 | 16.87 | 15.38 | 1.87 | 20.58 | 18.28 | 1.94 | 24.82 | 22.58 | 2.03 | 28.80 | 28.80 | 2.12 | 33.26 | 33.26 | 2.23 | 38.28 | 38.28 | 2.35 |
| | 1000 | 10.52 | 9.68 | 1.77 | 13.66 | 12.55 | 1.82 | 17.05 | 15.55 | 1.87 | 20.82 | 18.50 | 1.94 | 25.02 | 22.76 | 2.02 | 29.05 | 29.05 | 2.10 | 33.58 | 33.58 | 2.20 | 38.50 | 38.50 | 2.30 |
| | 1125 | 10.69 | 9.84 | 1.79 | 13.86 | 12.74 | 1.84 | 17.29 | 15.76 | 1.88 | 21.16 | 18.79 | 1.95 | 25.27 | 22.99 | 2.02 | 29.36 | 29.36 | 2.09 | 33.96 | 33.96 | 2.18 | 38.66 | 38.66 | 2.26 |
| 75 (23.9) | 915 | 9.84 | 9.05 | 1.83 | 13.00 | 11.95 | 1.88 | 16.36 | 14.91 | 1.95 | 20.04 | 17.80 | 2.03 | 24.45 | 22.25 | 2.13 | 28.37 | 28.37 | 2.22 | 32.79 | 32.79 | 2.34 | 37.75 | 37.75 | 2.47 |
| | 1000 | 9.96 | 9.17 | 1.84 | 13.16 | 12.09 | 1.90 | 16.54 | 15.08 | 1.95 | 20.26 | 18.00 | 2.02 | 24.65 | 22.43 | 2.12 | 28.61 | 28.61 | 2.20 | 33.08 | 33.08 | 2.31 | 38.00 | 38.00 | 2.42 |
| | 1125 | 10.17 | 9.36 | 1.86 | 13.35 | 12.27 | 1.91 | 16.78 | 15.30 | 1.96 | 20.54 | 18.24 | 2.03 | 24.89 | 22.65 | 2.11 | 28.92 | 28.92 | 2.19 | 33.44 | 33.44 | 2.28 | 38.19 | 38.19 | 2.37 |
| **N5H5S36AKA* Outdoor Section With FHMA5*36L0* Indoor Section** | | | | | | | | | | | | | | | | | | | | | | | | | |
| 65 (18.3) | 1050 | 14.05 | 12.93 | 2.17 | 17.66 | 16.22 | 2.23 | 22.24 | 20.28 | 2.33 | 26.39 | 23.44 | 2.42 | 31.03 | 28.24 | 2.53 | 36.16 | 36.16 | 2.66 | 41.82 | 41.82 | 2.80 | 47.97 | 47.97 | 2.92 |
| | 1200 | 14.30 | 13.15 | 2.20 | 17.93 | 16.48 | 2.25 | 22.51 | 20.53 | 2.33 | 26.69 | 23.71 | 2.42 | 31.41 | 28.58 | 2.51 | 36.64 | 36.64 | 2.63 | 42.46 | 42.46 | 2.77 | 48.35 | 48.35 | 2.87 |
| | 1350 | 14.52 | 13.36 | 2.23 | 18.18 | 16.70 | 2.27 | 22.75 | 20.74 | 2.35 | 26.96 | 23.94 | 2.42 | 31.73 | 28.88 | 2.51 | 37.05 | 37.05 | 2.62 | 42.96 | 42.96 | 2.75 | 48.53 | 48.53 | 2.84 |
| 70.0 (21.1) | 1050 | 13.52 | 12.43 | 2.25 | 17.15 | 15.76 | 2.31 | 21.36 | 19.48 | 2.41 | 26.02 | 23.11 | 2.53 | 30.57 | 27.82 | 2.64 | 35.60 | 35.60 | 2.78 | 41.11 | 41.11 | 2.92 | 47.23 | 47.23 | 3.05 |
| | 1200 | 13.77 | 12.67 | 2.27 | 17.43 | 16.02 | 2.33 | 21.80 | 19.88 | 2.42 | 26.32 | 23.38 | 2.52 | 30.95 | 28.16 | 2.63 | 36.08 | 36.08 | 2.75 | 41.73 | 41.73 | 2.88 | 47.70 | 47.70 | 2.99 |
| | 1350 | 13.99 | 12.87 | 2.31 | 17.68 | 16.25 | 2.36 | 22.39 | 20.41 | 2.45 | 26.59 | 23.61 | 2.53 | 31.27 | 28.46 | 2.63 | 36.48 | 36.48 | 2.74 | 42.24 | 42.24 | 2.87 | 47.92 | 47.92 | 2.96 |
| 75 (23.9) | 1050 | 12.93 | 11.90 | 2.32 | 16.60 | 15.25 | 2.40 | 20.77 | 18.94 | 2.51 | 25.64 | 22.77 | 2.65 | 30.11 | 27.40 | 2.77 | 35.04 | 35.04 | 2.90 | 40.45 | 40.45 | 3.04 | 46.44 | 46.44 | 3.19 |
| | 1200 | 13.18 | 12.13 | 2.35 | 16.88 | 15.51 | 2.42 | 21.11 | 19.24 | 2.51 | 25.94 | 23.04 | 2.64 | 30.48 | 27.74 | 2.75 | 35.51 | 35.51 | 2.87 | 41.03 | 41.03 | 3.00 | 47.01 | 47.01 | 3.11 |
| | 1350 | 13.41 | 12.34 | 2.38 | 17.13 | 15.75 | 2.45 | 21.40 | 19.51 | 2.53 | 26.20 | 23.27 | 2.64 | 30.80 | 28.03 | 2.74 | 35.90 | 35.90 | 2.85 | 41.51 | 41.51 | 2.99 | 47.29 | 47.29 | 3.08 |

Manufacturer reserves the right to change, at any time, specifications and designs without notice and without obligations.

# HEAT PUMP HEATING PERFORMANCE (Continued)

| INDOOR AIR | | OUTDOOR COIL ENTERING AIR TEMPERATURES °F (°C) | | | | | | | | | | | | | | | | | | | | | | | |
|---|---|---|---|---|---|---|---|---|---|---|---|---|---|---|---|---|---|---|---|---|---|---|---|---|---|
| | | -3.0 (-19.4) | | | 7.0 (-13.9) | | | 17.0 (-8.3) | | | 27.0 (-2.8) | | | 37.0 (2.8) | | | 47.0 (8.3) | | | 57.0 (13.9) | | | 67.0 (19.4) | | |
| EDB | CFM | Capacity MBtuh | | Total Sys. KW† | Capacity MBtuh | | Total Sys. kW† | Capacity MBtuh | | Total Sys. kW† | Capacity MBtuh | | Total Sys. kW† | Capacity MBtuh | | Total Sys. kW† | Capacity MBtuh | | Total Sys. kW† | Capacity MBtuh | | Total Sys. kW† | Capacity MBtuh | | Total Sys. kW† |
| | | Total | Integ* | | Total | Integ* | | Total | Integ* | | Total | Integ* | | Total | Integ* | | Total | Integ* | | Total | Integ* | | Total | Integ* | |
| **N5H5S42AKA* Outdoor Section With FHMA5*42L0* Indoor Section** | | | | | | | | | | | | | | | | | | | | | | | | | |
| 65 (18.3) | 1240 | 14.60 | 13.44 | 2.39 | 18.83 | 17.31 | 2.49 | 23.59 | 21.50 | 2.60 | 28.72 | 25.51 | 2.71 | 34.41 | 31.32 | 2.85 | 40.01 | 40.01 | 2.97 | 46.57 | 46.57 | 3.12 | 54.10 | 54.10 | 3.31 |
| | 1400 | 14.83 | 13.64 | 2.41 | 19.08 | 17.53 | 2.50 | 23.85 | 21.75 | 2.60 | 29.10 | 25.85 | 2.70 | 34.74 | 31.61 | 2.82 | 40.44 | 40.44 | 2.92 | 47.13 | 47.13 | 3.07 | 54.64 | 54.64 | 3.22 |
| | 1575 | 15.05 | 13.85 | 2.43 | 19.32 | 17.76 | 2.52 | 24.11 | 21.98 | 2.61 | 29.42 | 26.13 | 2.71 | 35.06 | 31.90 | 2.81 | 40.84 | 40.84 | 2.90 | 47.64 | 47.64 | 3.03 | 55.05 | 55.05 | 3.16 |
| 70.0 (21.1) | 1240 | 14.00 | 12.88 | 2.50 | 18.26 | 16.78 | 2.61 | 23.04 | 21.01 | 2.73 | 28.15 | 25.00 | 2.85 | 34.01 | 30.95 | 2.99 | 39.50 | 39.50 | 3.11 | 45.93 | 45.93 | 3.27 | 53.38 | 53.38 | 3.48 |
| | 1400 | 14.23 | 13.09 | 2.52 | 18.51 | 17.01 | 2.62 | 23.32 | 21.27 | 2.73 | 28.48 | 25.30 | 2.83 | 34.33 | 31.24 | 2.96 | 39.92 | 39.92 | 3.07 | 46.47 | 46.47 | 3.21 | 53.95 | 53.95 | 3.38 |
| | 1575 | 14.46 | 13.30 | 2.55 | 18.77 | 17.24 | 2.64 | 23.59 | 21.51 | 2.74 | 28.80 | 25.58 | 2.83 | 34.64 | 31.52 | 2.95 | 40.31 | 40.31 | 3.05 | 46.98 | 46.98 | 3.18 | 54.41 | 54.41 | 3.31 |
| 75 (23.9) | 1240 | 13.37 | 12.30 | 2.63 | 17.68 | 16.24 | 2.74 | 22.39 | 20.41 | 2.86 | 27.57 | 24.49 | 2.98 | 33.60 | 30.58 | 3.14 | 38.99 | 38.99 | 3.27 | 45.29 | 45.29 | 3.43 | 52.62 | 52.62 | 3.64 |
| | 1400 | 13.60 | 12.51 | 2.65 | 17.94 | 16.49 | 2.75 | 22.67 | 20.67 | 2.86 | 27.90 | 24.78 | 2.97 | 33.93 | 30.87 | 3.12 | 39.39 | 39.39 | 3.22 | 45.82 | 45.82 | 3.37 | 53.25 | 53.25 | 3.55 |
| | 1575 | 13.83 | 12.72 | 2.68 | 18.19 | 16.71 | 2.77 | 22.97 | 20.94 | 2.87 | 28.20 | 25.04 | 2.97 | 34.22 | 31.14 | 3.10 | 39.78 | 39.78 | 3.20 | 46.32 | 46.32 | 3.33 | 53.74 | 53.74 | 3.48 |
| **N5H5S48AKB* Outdoor Section With FHMA5*48L0* Indoor Section** | | | | | | | | | | | | | | | | | | | | | | | | | |
| 65 (18.3) | 1250 | 17.68 | 16.27 | 2.83 | 22.95 | 21.09 | 2.96 | 28.59 | 26.07 | 3.10 | 34.91 | 31.00 | 3.25 | 41.53 | 37.79 | 3.41 | 48.12 | 48.12 | 3.57 | 55.75 | 55.75 | 3.77 | 64.50 | 64.50 | 4.04 |
| | 1600 | 18.33 | 16.86 | 2.86 | 23.68 | 21.76 | 2.97 | 29.41 | 26.82 | 3.08 | 36.30 | 32.24 | 3.22 | 42.36 | 38.55 | 3.32 | 49.20 | 49.20 | 3.44 | 57.22 | 57.22 | 3.60 | 66.50 | 66.50 | 3.81 |
| | 1800 | 18.63 | 17.14 | 2.89 | 24.01 | 22.06 | 3.00 | 29.78 | 27.16 | 3.09 | 36.61 | 32.52 | 3.22 | 42.73 | 38.88 | 3.31 | 49.67 | 49.67 | 3.41 | 57.82 | 57.82 | 3.55 | 67.24 | 67.24 | 3.73 |
| 70.0 (21.1) | 1250 | 16.72 | 15.38 | 2.95 | 22.16 | 20.36 | 3.09 | 27.86 | 25.40 | 3.24 | 34.08 | 30.27 | 3.39 | 41.05 | 37.36 | 3.58 | 47.50 | 47.50 | 3.74 | 54.97 | 54.97 | 3.95 | 63.50 | 63.50 | 4.23 |
| | 1600 | 17.42 | 16.02 | 2.98 | 22.81 | 20.96 | 3.10 | 28.65 | 26.12 | 3.22 | 34.98 | 31.06 | 3.34 | 41.85 | 38.08 | 3.48 | 48.56 | 48.56 | 3.60 | 56.41 | 56.41 | 3.77 | 65.49 | 65.49 | 3.99 |
| | 1800 | 17.61 | 16.20 | 3.01 | 23.19 | 21.31 | 3.12 | 29.01 | 26.45 | 3.23 | 35.48 | 31.51 | 3.34 | 42.22 | 38.42 | 3.46 | 49.02 | 49.02 | 3.57 | 57.01 | 57.01 | 3.72 | 66.28 | 66.28 | 3.92 |
| 75 (23.9) | 1250 | 15.90 | 14.63 | 3.08 | 21.27 | 19.55 | 3.24 | 27.07 | 24.68 | 3.38 | 33.36 | 29.63 | 3.55 | 40.57 | 36.92 | 3.76 | 46.89 | 46.89 | 3.93 | 54.17 | 54.17 | 4.15 | 62.50 | 62.50 | 4.43 |
| | 1600 | 16.50 | 15.18 | 3.12 | 22.04 | 20.25 | 3.24 | 27.89 | 25.43 | 3.36 | 34.21 | 30.38 | 3.49 | 41.36 | 37.63 | 3.65 | 47.93 | 47.93 | 3.78 | 55.60 | 55.60 | 3.95 | 64.47 | 64.47 | 4.18 |
| | 1800 | 16.78 | 15.43 | 3.14 | 22.36 | 20.54 | 3.26 | 28.23 | 25.74 | 3.37 | 34.58 | 30.71 | 3.48 | 41.70 | 37.95 | 3.63 | 48.38 | 48.38 | 3.75 | 56.20 | 56.20 | 3.90 | 65.25 | 65.25 | 4.11 |
| **N5H5S60AKA Outdoor Section With FHMA5*60L0* Indoor Section** | | | | | | | | | | | | | | | | | | | | | | | | | |
| 65 (18.3) | 1775 | 20.98 | 19.30 | 3.48 | 26.81 | 24.64 | 3.60 | 33.31 | 30.37 | 3.73 | 41.27 | 36.66 | 3.89 | 48.26 | 43.92 | 4.00 | 56.18 | 56.18 | 4.15 | 64.59 | 64.59 | 4.28 | 72.80 | 72.80 | 4.46 |
| | 2000 | 21.30 | 19.60 | 3.52 | 27.17 | 24.97 | 3.63 | 33.72 | 30.74 | 3.75 | 41.61 | 36.96 | 3.89 | 48.71 | 44.32 | 3.98 | 56.76 | 56.76 | 4.11 | 64.90 | 64.90 | 4.21 | 72.96 | 72.96 | 4.37 |
| | 2250 | 21.63 | 19.90 | 3.57 | 27.52 | 25.29 | 3.67 | 34.11 | 31.10 | 3.77 | 41.97 | 37.28 | 3.90 | 49.14 | 44.71 | 3.99 | 57.21 | 57.21 | 4.09 | 65.10 | 65.10 | 4.18 | 72.93 | 72.93 | 4.31 |
| 70.0 (21.1) | 1775 | 20.21 | 18.59 | 3.63 | 26.08 | 23.97 | 3.76 | 32.57 | 29.70 | 3.89 | 40.05 | 35.57 | 4.04 | 47.74 | 43.44 | 4.20 | 55.50 | 55.50 | 4.35 | 63.90 | 63.90 | 4.49 | 72.01 | 72.01 | 4.68 |
| | 2000 | 20.54 | 18.90 | 3.67 | 26.45 | 24.31 | 3.79 | 33.00 | 30.08 | 3.90 | 41.18 | 36.57 | 4.07 | 48.17 | 43.84 | 4.17 | 56.07 | 56.07 | 4.31 | 64.24 | 64.24 | 4.42 | 72.23 | 72.23 | 4.58 |
| | 2250 | 20.87 | 19.20 | 3.72 | 26.81 | 24.64 | 3.83 | 33.40 | 30.46 | 3.94 | 41.55 | 36.90 | 4.08 | 48.60 | 44.22 | 4.17 | 56.57 | 56.57 | 4.28 | 64.47 | 64.47 | 4.38 | 72.26 | 72.26 | 4.52 |
| 75 (23.9) | 1775 | 19.35 | 17.80 | 3.79 | 25.28 | 23.23 | 3.93 | 31.80 | 29.00 | 4.07 | 39.05 | 34.68 | 4.22 | 47.24 | 42.99 | 4.41 | 54.82 | 54.82 | 4.56 | 63.20 | 63.20 | 4.71 | 71.22 | 71.22 | 4.91 |
| | 2000 | 19.69 | 18.11 | 3.83 | 25.66 | 23.58 | 3.96 | 32.23 | 29.39 | 4.08 | 39.56 | 35.13 | 4.22 | 47.65 | 43.36 | 4.37 | 55.38 | 55.38 | 4.51 | 63.56 | 63.56 | 4.63 | 71.47 | 71.47 | 4.80 |
| | 2250 | 20.02 | 18.42 | 3.88 | 26.03 | 23.92 | 3.99 | 32.64 | 29.76 | 4.11 | 40.09 | 35.61 | 4.24 | 48.06 | 43.74 | 4.37 | 55.91 | 55.91 | 4.49 | 63.81 | 63.81 | 4.59 | 71.54 | 71.54 | 4.74 |

**NOTE**: When the required data falls between the published data, interpolation may be performed. Extrapolation is not an acceptable practice.
* The Btuh heating capacity values shown are net integrated values from which the defrost effect has been subtracted. The Btuh heating from supplement heaters should be added to those values to obtain total Sys. capacity.
{ The kW values include the compressor, outdoor fan motor, and indoor blower motor. The kW from supplement heaters should be added to these values to obtain total Sys. kilowatts.
**EDB** — Entering Dry Bulb2

Manufacturer reserves the right to change, at any time, specifications and designs without notice and without obligations.

# Guide Specifications
# General

Air-Cooled, Split-System Heat Pump
**N5H5S**
1.5 to 5 nominal tons

## System Description

Outdoor-mounted, air-cooled, split-system heat pump unit suitable for ground or rooftop installation. Unit consists of a hermetic compressor, an air-cooled coil, propeller-type condenser fan, and a control box. Unit will discharge supply air upward as shown on contract drawings. Unit will be used in a refrigeration circuit to match up to a packaged fan coil or coil unit.

## Quality Assurance

- Unit will be rated in accordance with the latest edition of AHRI Standard 210/240.
- Unit will be certified for capacity and efficiency, and listed in the latest AHRI directory.
- Unit construction will comply with latest edition of ANSI/ ASHRAE and with NEC.
- Unit will be constructed in accordance with UL standards and will carry the UL label of approval. Unit will have C-UL approval.
- Unit cabinet will be capable of withstanding Federal Test Method Standard No. 141 (Method 6061) 500-hr salt spray test.
- Air-cooled condenser coils are pressure tested and the outdoor unit is leak tested.
- Unit constructed in ISO9001 approved facility.

## Delivery, Storage, and Handling

Unit will be shipped as single package only and is stored and handled per unit manufacturer's recommendations.

## Warranty (for inclusion by specifying engineer)

U.S. and Canada only.

# PRODUCTS

## Equipment

Factory assembled, single piece, air-cooled heat pump unit. Contained within the unit enclosure is all factory wiring, piping, controls, compressor, refrigerant charge R-454B, and special features required prior to field start-up.

## Unit Cabinet

Unit cabinet will be constructed of galvanized steel and coated with pre-paint.

Available with dense grill only.

## Fans

Condenser fan will be direct-drive propeller type, discharging air upward.

Condenser fan motors will be totally enclosed, 1-phase type with class B or class F insulation and permanently lubricated bearings.

Shafts will be corrosion resistant.

Fan blades will be statically and dynamically balanced.

Condenser fan openings will be equipped with steel wire safety guards.

## Compressor

Compressor will be hermetically sealed.

Compressor will be mounted on rubber vibration isolators.

## Condenser Coil

Condenser coil will be air cooled.

Coil will be constructed of aluminum fins mechanically bonded to copper or aluminum tubes which are then cleaned, dehydrated, and sealed.

## Refrigeration Components

Refrigeration circuit components will include liquid-line shutoff valve with sweat connections, vapor-line shutoff valve with sweat connections, system charge of R-454B refrigerant, POE compressor oil, accumulator, reversing valve and solenoid valve (19 size only).

## Operating Characteristics

The capacity of the unit will meet or exceed _____ Btuh at a suction temperature of _____ °F/°C. The power consumption at full load will not exceed _____ kW.

Combination of the unit and the evaporator or fan coil unit will have a total net cooling capacity of _____ Btuh or greater at conditions of _____ CFM entering air temperature at the evaporator at _____ °F wet bulb and _____ °F/°C dry bulb, and air entering the unit at _____ °F/°C.

The system will have a SEER of _____ Btuh/watt or greater at DOE conditions.

## Electrical Requirements

Nominal unit electrical characteristics will be _____ v, _____ phase, 60 Hz. The unit will be capable of satisfactory operation within voltage limits of _____ v to _____ v.

Unit electrical power will be single point connection.

Control circuit will be 24v.

## Special Features

Refer to section of this literature identifying accessories and descriptions for specific features and available enhancements.

**Manufacturer reserves the right to change, at any time, specifications and designs without notice and without obligations.**

# System Design Summary

1. Intended for outdoor installation with free air inlet and outlet. Outdoor fan external static pressure available is less than 0.01-in. wc.
2. Minimum outdoor operating air temperature without low-ambient operation accessory is 55°F (12.8°C).
3. Maximum outdoor operating air temperature for cooling mode is 125°F (51.7°C).
4. Minimum outdoor operating air temperature for heating mode is –10°F (–23.3°C).
5. Maximum outdoor operating air temperature for heating mode is 66°F (18.9°C).
6. For reliable operation, unit should be level in all horizontal planes.
7. For interconnecting refrigerant tube lengths greater than 80 ft (23.4 m) and/or elevation differences between indoor and outdoor units greater than 20 ft (6.1 m), consult Residential Piping and Longline Guideline and Service Manual available from equipment distributor.
8. If any refrigerant tubing is buried, provide a 6 in. (152.4 mm) vertical rise to the valve connections at the unit. Refrigerant tubing lengths up to 36 in. (914.4 mm) may be buried without further consideration. Do not bury refrigerant lines longer than 36 in. (914.4 mm).
9. Use only copper wire for electric connection at unit. Aluminum and clad aluminum are not acceptable for the type of connector provided.
10. Do not apply capillary tube indoor coils to these units.
11. Factory-supplied filter drier must be installed

© 2026 Carrier. All rights reserved.

**Manufacturer reserves the right to change, at any time, specifications and designs without notice and without obligations.**